PRELIMINARY

X1215/16 (ABOVE SERIAL NUMBER 2000)

Cartridge Disk Drive Unit

PHILIPS Data Systems

A PUBLICATION OF
PHILIPS DATA SYSTEMS B.V.
THE HAGUE, THE NETHERLANDS

PUB. NO 5122 992 01062

Great care has been taken to ensure that the information contained in this handbook is accurate and complete.
Should any error or omissions be discovered, however, or should any user wish to make a suggestion for improving this handbook, he is invited to send the relevant details to:

PHILIPS DATA SYSTEMS B.V.
P.O. BOX 1374, THE HAGUE.
THE NETHERLANDS.

Copyright © by PHILIPS DATA SYSTEMS B.V.
All rights strictly reserved. Reproduction or issue to third parties in any form whatever is not permitted without written authority from the publisher.

	CONTENTS	page 0-1 thr. 0-6
VOLUME I :	INTRODUCTION	page 1-1 thr. 1-12
1-1	General Description	1-3
1-2	Fixed Disk and Single Disk Cartridge	1-4
2	FUNCTIONAL DESCRIPTION	1-5
3	PHYSICAL DESCRIPTION	1-7
3-1	Covers	1-7
3-2	Cartridge Holder	1-7
3-3	Fixed Disk	1-7
3-4	Spindle	1-7
3-5	Head Positioner Assembly	1-7
3-6	Switching Unit	1-7
3-7	Electronic Assemblies	1-7
3-8	Electronics Cage	1-7
3-9	Cleaning Mechanism	1-9
3-10	Operators Panel	1-9
4	TECHNICAL DATA	1-10
4-1	Performance Characteristics	1-10
4-2	Physical Characteristics	1-10
4-3	Electrical Requirements	1-10
4-4	Environmental Requirements	1-10
5	INTERFACE SIGNALS	1-11
6	OPTIONS	1-12
VOLUME II:	OPERATION	page 2-1 thr. 2-6
1	OPERATORS PANEL	2-2
1-1	General	2-2
1-2	Button and Indicator Functions	2-2
2	CARTRIDGE HANDLING	2-3
2-1	Cartridge Handling and Storage	2-3
2-2	Loading	2-3
2-3	Unloading	2-3
3	DISK DRIVE HANDLING	2-6
3-1	Starting Procedure	2-6
3-2	Stopping Procedure	2-6
VOLUME III:	THEORY	page 3-1 thr. 3-32
1	GENERAL	3-3
2	INTERFACE DIALOGUE	3-5
3	DISK DRIVE ACTIONS	3-7
4	MAJOR ASSEMBLIES	3-9
4-1	Main Drive Motor	3-9
4-2	Brush Motor	3-9
4-3	Index/Sector Transducers	3-9
4-4	Positioner	3-9
4-5	Speed Transducer	3-9
4-6	Displacement Pick-up System	3-9
4-7	Track Zero Indicator	3-9
5	INTERFACE	3-10
5-1	Logic Levels	3-10
5-2	Input Signals	3-10
5-2-1	Unit Select Signal	3-10
5-2-2	Tagline and address busline signals	3-10
5-2-3	Set unit unsafe signal	3-11
5-2-4	Write data signal	3-12
5-3	Output Signals	3-12
5-3-1	Index signal cartridge (Fixed Disk)	3-12
5-3-2	Sector signal cartridge (Fixed Disk)	3-12
5-3-3	Unit ready signal	3-12
5-3-4	On cylinder signal	3-12
5-3-5	Unit unsafe 1 signal	3-12
5-3-6	Unit unsafe 2 signal	3-13
5-3-7	Attention	3-13
5-3-8	Read data signal	3-13

6	PRINCIPLES OF OPERATION	page 3-14
6-1	Servo System	3-14
6-2	Velocity and Acceleration	3-14
6-3	Meander System	3-15
6-4	Voice-Coil System	3-15
6-5	Servo Operations	3-15
6-6	Position Servo Loop	3-17
6-7	Additional Control Signals	3-19
6-8	Window Functions	3-19
6-9	Recording Principles	3-19
6-10	Write Operation	3-19
6-11	Read Operation	3-21
6-12	Read/Write Protection	3-21
7	FUNCTIONAL EXPLANATION	3-23
7-1	Power On	3-23
7-2	Start	3-23
7-3	First Seek	3-23
7-4	Normal Seek	3-25
7-5	Track Count Operation	3-27
7-6	Place Positioning	3-27
7-7	Positioning Mode	3-27
7-8	Return to Zero Seek	3-29
7-9	Go to Retracted Position Seek	3-29
7-10	Writing	3-31
7-11	Reading	3-31
7-12	Stop	3-31
8	POWER DISTRIBUTION	3-32
8-1	Power Supply	3-32
VOLUME IV:	DIAGRAMS	page 4-1 thr. 4-52
1	KEY TO DIAGRAMS	
1-1	General	
1-2	Logic Symbols	
2	SIGNAL NAMES	
3	DIAGRAMS	4-15
	Card CUP	4-17
	Card DBC	4-19
	Card DC	4-21
	Card FI	4-23
	Card IC	4-25/27
	Card LAT	4-29
	Card Meander	4-31
	Card PA	4-33
	Card RR	4-35
	Card RW	4-37/39
	Card SE	4-41
	Card SS	4-43
	Power Card	4-45
	Service Card Part A	4-47
	Service Card Part B	4-49
	Power Supply and Distribution	4-51
VOLUME V:	ELECTRONICS	page 5-1 thr. 5-6
1	SPECIAL CIRCUIT	5-2
1-1	Limiter	5-2
1-2	Relay Driver	5-2
1-3	Electronic Switch	5-2
1-4	Differential Amplifier	5-3
1-5	Operational Amplifier	5-4
1-6	Window Circuit	5-4
1-7	Meander Card	5-5
1-8	Voice Coil Current Distribution	5-5
VOLUME VI:	MECHANICS	page 6-1 thr. 6-6
1	UNIT STRUCTURE	
1-1	Dust Covers	6-3
1-2	Switching Unit	6-3
1-3	Cooling and Cleaning Unit	6-3
1-4	Cartridge Holder	6-3
1-5	Spindle Mechanism	6-4
1-6	Positioner Mechanism	6-4
1-7	Electronic Cage	6-5

VOLUME VII:		MAINTENANCE	page 7-1 thr. 7-
	1	MAINTENANCE	7-3
	1-1	General	7-3
	1-2	Special Tools	7-3
	1-3	Materials	7-3
	1-4	Exerciser	7-5
	1-5	Exerciser Operation	7-5
	2	PREVENTIVE MAINTENANCE	7-6
	2-1	Scheduled Maintenance 1000 hrs	7-6
	2-2	Scheduled Maintenace 2000/4000 hrs	7-7
	3	ELECTRONIC ADJUSTMENTS	7-8
	3-1	Micro-Switches	6-8
	3-2	Y-Direction Meander Block	7-9
	3-3	Adjustment of the Meander Card potentiometers	7-10
	3-4	Optical Zero Adjustment	7-10
	3-5	Positioning Speed Adjustment	7-10
	3-6	Adjustment of Heads 0 and 1	7-15
	3-7	Adjustment of the Index Unit (Cartridge)	7-16
	3-8	Adjustment of the Index Unit (Fixed Disk)	7-17
	3-9	Adjustment Temp. Compensation	
	4	MECHANICAL ADJUSTMENTS	7-18
	4-1	Index Unit Cartridge	7-18
	4-2	Index Unit Fixed Disk	7-18
	4-3	Retracted Switch	7-19
	4-4	Cleaning the Heads	7-19
	5	REPLACEMENTS	7-21
	5-1	General	7-21
	5-2	Airfilters	7-21
	5-3	Lock Magnet	7-21
	5-4	Clamp Switches	7-21
	5-5	Cleaning Switch	7-21
	5-6	Retracted Switch	7-23
	5-7	Positioner Block Magnet	7-23
	5-8	Optical Zero Unit	7-23
	5-9	Cleaning Brushes	7-23
	5-10	Power Supply Card	7-23
	5-11	Power Transistors	7-23
	5-12	Push Button and Indicators	7-25
	5-13	Lamp Push Button and Indicators	7-25
	5-14	Index Unit Cartridge	7-25
	5-15	Fixed Disk	7-25
	5-16	Spindle	7-25
	5-17	Pack Motor	7-27
	5-18	Heads	7-27
	5-19	Switching Unit	7-27
	5-20	Meander	7-29
	5.21	AFTER HEADCRASH PROCEDURE, AFTER REPAIR PROCEDURE	7-29 7-29
	6	TROUBLE SHOOTING	
VOLUME VIII		PARTS LIST	page 8-1 thr 8-68
VOLUME IX		WIRING LIST	page 9-1 thr 9-
VOLUME X		INSTALLATION	page 10-1 thr.10-6
	1	INSTALLATION	10-3
	1-1	Space location	10-3
	1-2	Mounting in the rack	10-3
	1-3	Interface connections	10-3
	1-4	Power connections	10-3
	1-5	Ground connections	10-3
	1-6	Input power requirements	10-4
	2	CHECK OUT AND START UP PROCEDURE	10-5
VOLUME XI		PACKING AND UNPACKING	page 11-1 thr 11-6
	1	GENERAL	11-2
	2	MACHINE HANDLING	11-3
	3	PAKING AND UNPACKING	11-5
	3-1	Packing	11-5
	3-2	Unpacking	11-5

X1215/16 (ABOVE SERIAL NUMBER 2000)

Cartridge Disk Drive Unit

Vol.I: Introduction



Data
Systems

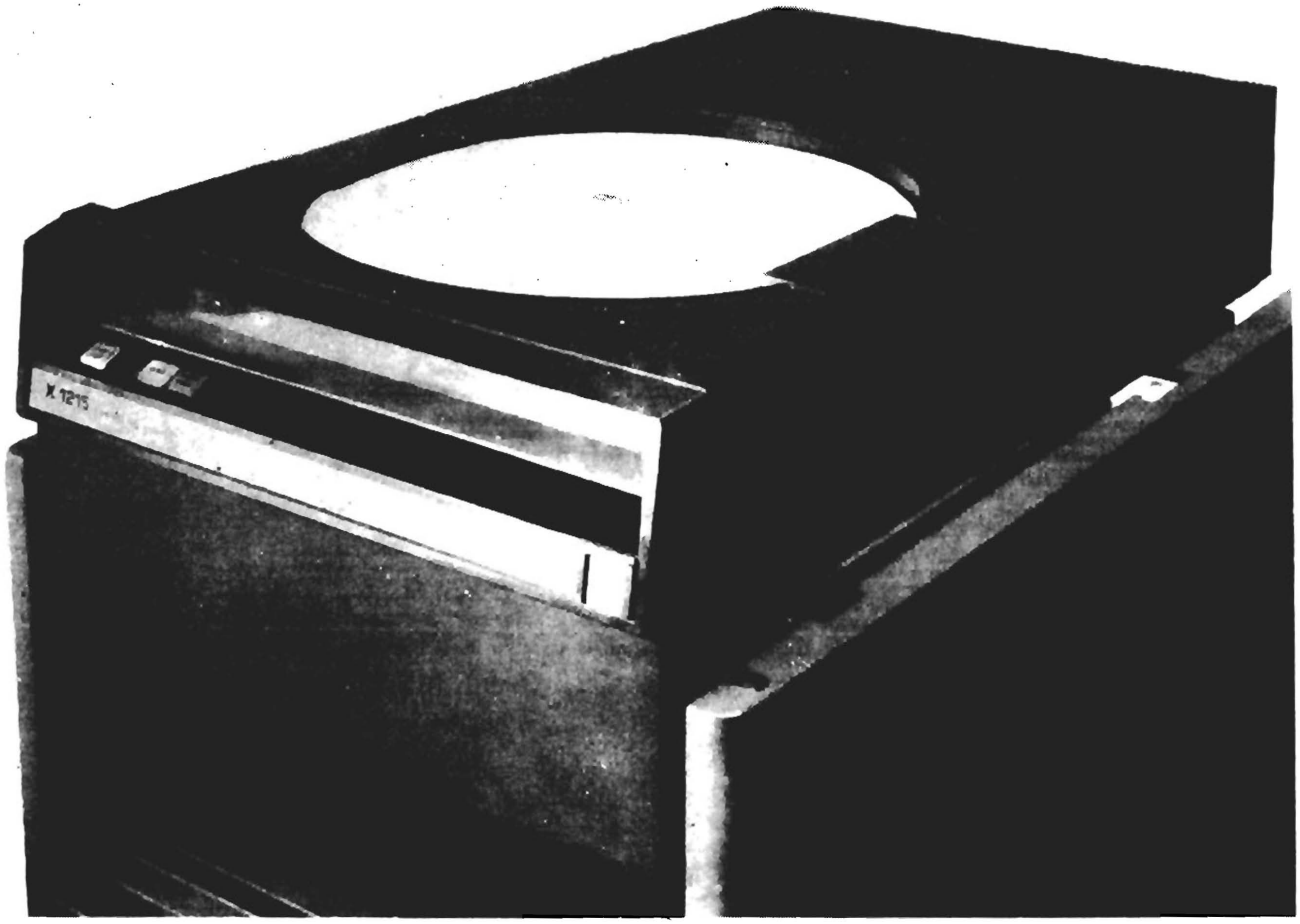

Fig. 1-1 CARTRIDGE DISC DRIVE UNIT

1.1 GENERAL DESCRIPTION. (figure 1-1, 1-2)

The X 1215 CDD is a random access data storage device especially designed for use in a star configuration, it is suitable for rack-cabinet installations or stand alone situation. The purpose of a CDD is to provide for the storage of data in a form which allows easy retrieval of these data when required. These requirements are satisfied by the use of discs which are provided with a magnetic coating.
The X1215 CDD is equipped with two independent discs, one of which is permanently mounted in the unit, the second disc is a top loading, operator interchangeable disc cartridge, on which can be written 204 data per side tracks at a nominal speed of 2400 r.p.m.
The data is stored on the discs (write operation) and recovered when required (read operation) by means of magnetic heads which float just clear of the disc surfaces.
To allow the complete disc surfaces to be used the discs are made to rotate and the magnetic heads are attached to a positioning mechanism which can move in and out accross the disc surfaces. The disc unit receives instructions about positioning and data handling from a Control Unit and supplies status information to the Control Unit via an assymetric interface.
As it is possible to use more than one CDD on one Control Unit a Unit Select line is used to indicate which CDD is being addressed.

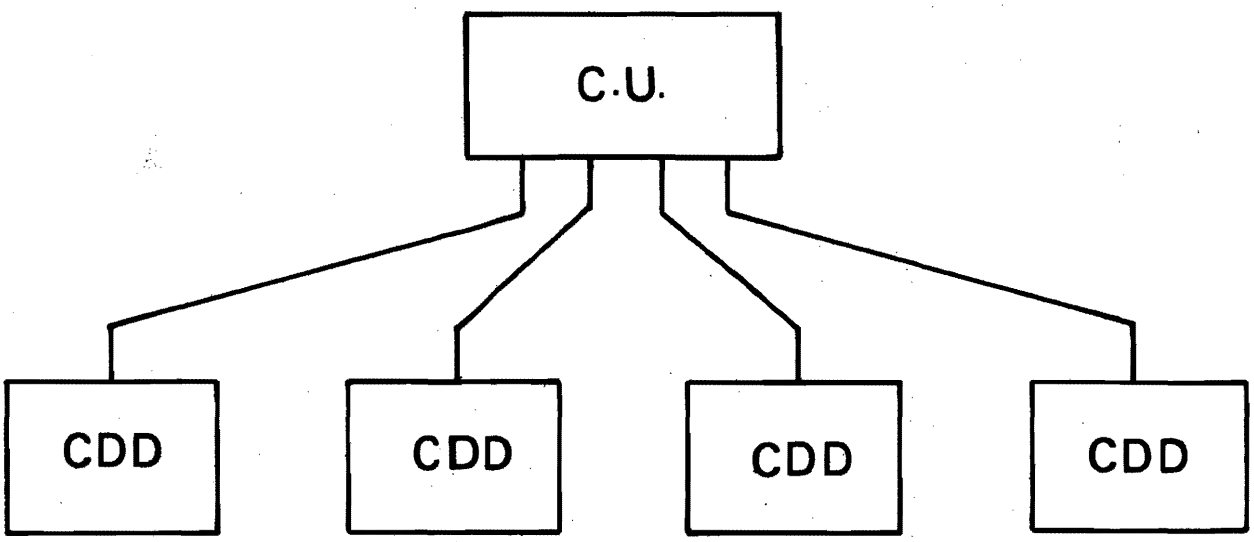

Figure 1-2 STAR CONFIGURATION

1.2 FIXED DISC AND SINGLE DISC CARTRIDGE (figure 1-3)

The disc used has a diameter of fourteen inches and is organised in the following way:

On each surface there are 204 tracks and as both sides of the disc are oxide coated and can consequently be used, it can be said that a disc has 204 cylinders each containing 2 tracks. The maximum storage capacity being 50 x 10^6 bits.

Mounted on the spindle is the index and sector ring which indicates the sectors by slots. Different types of cartridges can have a different number of slots.
The speed of a rotating disc is 2400 revolutions per minute and an average access time of 33 milliseconds is realised.
A magnetic ring keeps the cartridge in a fixed position. The fixed disc is permanently mounted inside the unit.

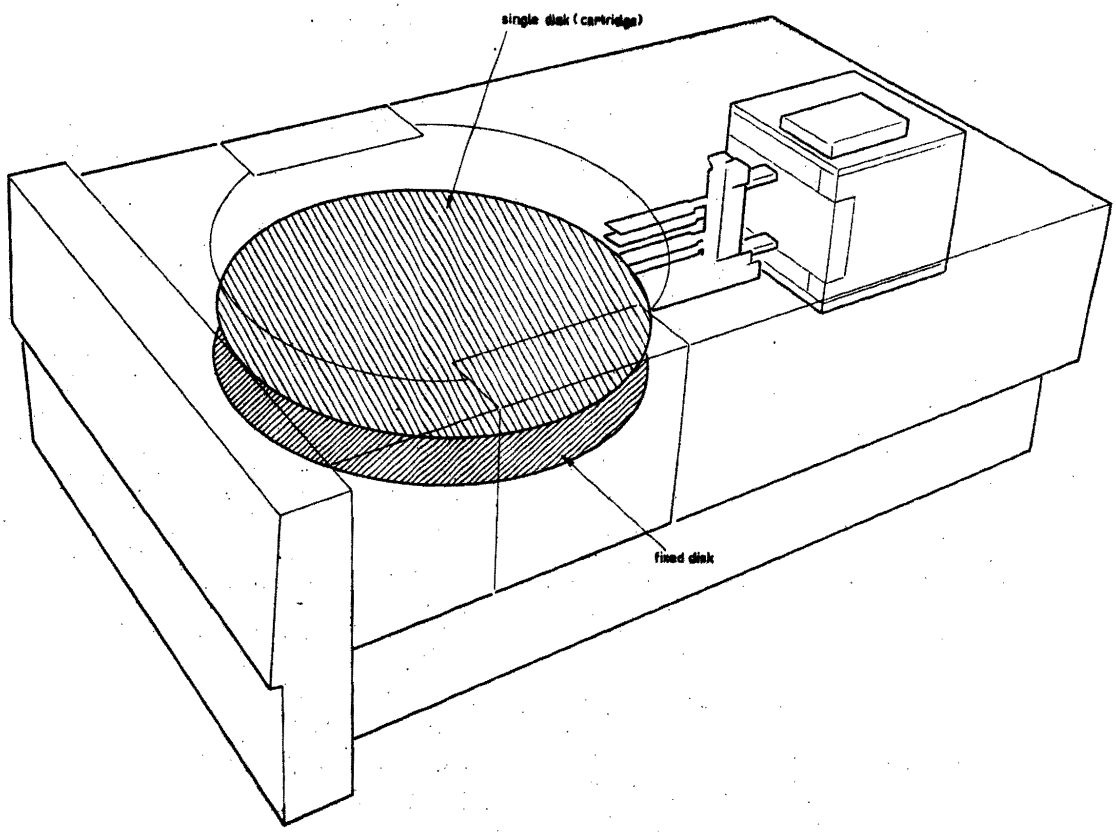

Figure 1-3 FIXED DISC AND SINGLE CARTRIDGE

Operation of the Power-on switch on the rear of the unit activates the power supplies, retracts the positioner and unlocks after 30 seconds the right clamp to load the cartridge as well as the positioner lock magnet. If the Start/Stop button is now pressed the disc drive motor starts and the brushes move in to clean the disc surfaces; when the cleaning cycle is completed the positioner moves in towards cylinder 000 and the heads are loaded. This is the First Seek and is used to position the heads on cylinder 000 before sending a Ready signal to the Control Unit. On a Normal Seek the Control Unit supplies the number of the required cylinder and the positioner begins moving towards it. Each time the positioner passes a cylinder the track count system generates a pulse which is used to determine whether the required cylinder has been reached.
When the heads are on the selected cylinder the Control Unit gives a signal to select one of the four heads, after this a write or read command is sent to the CDD by the Control Unit.

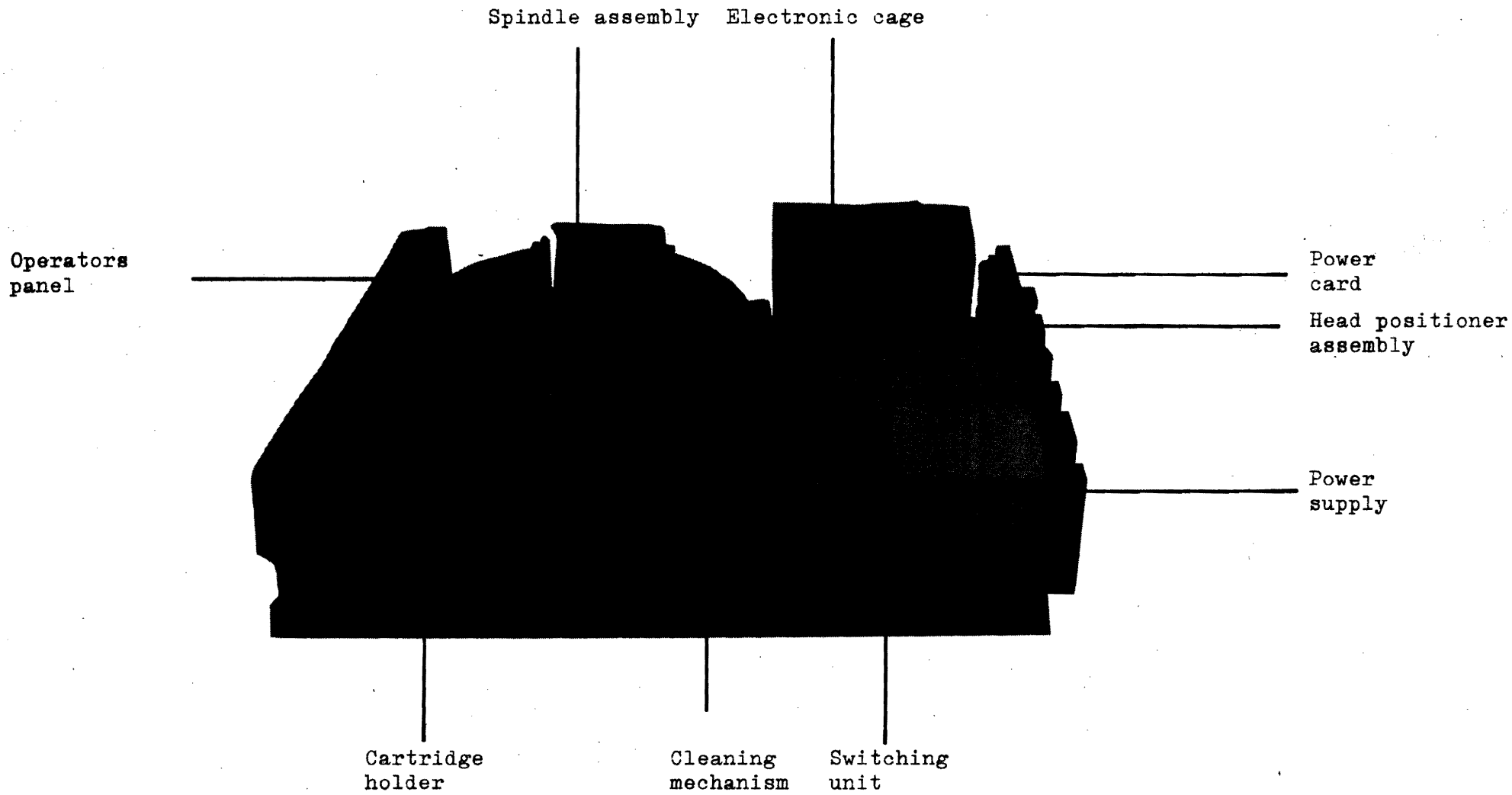

ASSEMBLY LOCATOR

Fig. 1-4

The Cartridge Disc Drive consists of several main parts. These major items are described in the following paragraphs. For the several assemblies see figure 1-4 and 1-5.

3.1 COVERS

A total of three covers are present, two on top and one on the bottom.
All these covers are removable.

3.2 CARTRIDGE HOLDER

The cartridge holder consists of two parts, namely:

a) A cartridge holder ring which includes two clamps. The right clamps is associated with it a protection unit (solenoid).
b) The first bottom plate at the centre of the cartridge holder ring is attached to the ring with four screws.

3.3 FIXED DISC

The fixed disc is mounted under the cartridge holder bottom plate and located on the spindle.

3.4 SPINDLE

The spindle is coupled to the drive motor via a belt. The spindle incorporates a metal disc with blades, which, when the spindle is rotating, sucks in external air via two filters. This air is used for cooling purposes and also keeping the discs clean. The spindle is earthed to eliminate static electricity acquired by the movement of the spindle.

3.5 HEAD POSITIONER ASSEMBLY

The positioner mechanism selectively positions the read/write heads over the data track of any particular address on the fixed or removable disc. The positioner assembly contains the following components: a voice-coil actuator, which moves a carriage: the carriage which supports the heads, and carriage guides, on which the carriage moves; head loading/unloading cam, which engage the head arms; and a position transducer.

3.6 SWITCHING UNIT

The switching unit contains a time meter, one fuse, three relays and the Power on/off switch.

The relays are:
The brush motor relay.
The drive motor relay.
The brake motor relay, used to brake the main drive motor.

3.7 ELECTRONIC ASSEMBLIES

The main electronic assemblies are the power supply and an electronic cage.
The power supply is situated in the rear of the CDD furnishes the operating voltages for all electronic assemblies, the positioner and the spindle and brush motor. The logics, servo-electronics, read/write electronics and interface-circuits are mounted together in an electronics cage.

3.8 ELECTRONICS CAGE

The electronic cage contains all the elctronics and logic needed for the unit except the read pre-amplifier and meander card.
The read/write card is located against the cartridge holder and is placed as close as possible to the heads.
The meander card is screened to prevent electrical interference to other circuits, and is positioned on the top of the magnet house.
Plugs and cabling connect the power supply, read write card and the meander circuit to the electronics cage.

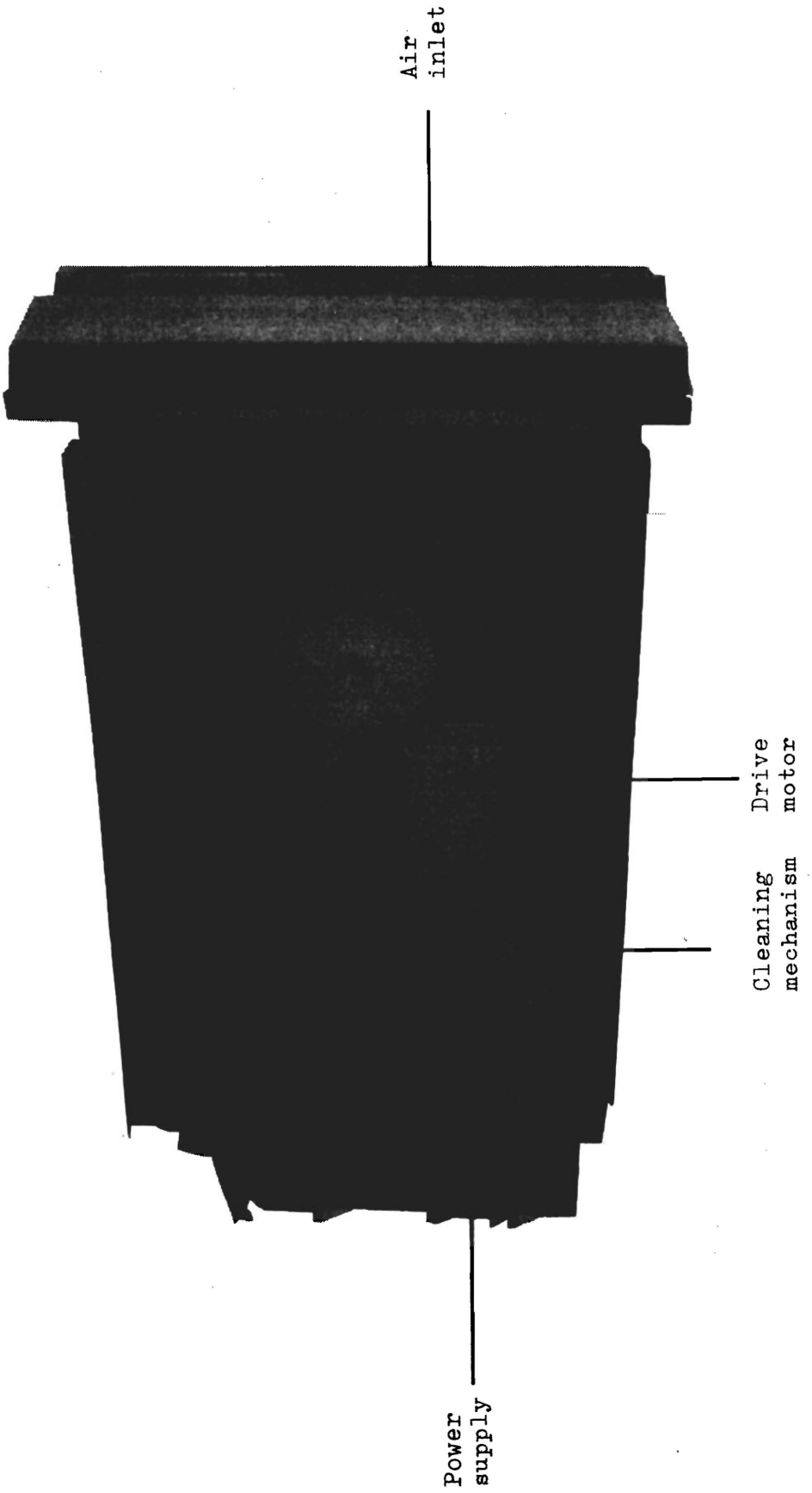

Fig. 1-5 ASSEMBLY LOCATOR LOWER

3.9 CLEANING MECHANISM

Each time a cartridge is installed the discs must be cleaned. This is done by a cleaning mechanism which consists of four brushes driven by a cleaning motor.

3.10 OPERATORS' PANEL

The Operators' panel is located at the front of the unit. The functions of each indicator are explained in Volume II.

4.1 PERFORMANCE CHARACTERISTICS

Details Disc (both discs are the same)

Disc diameter	356 mm (14 inches)
recording surfaces	2
tracks per side	204
track pitch	0,254 mm (0,01 inch)
tracks per cylinder	2
recording method	double frequency
sectors	optional
index pulse	1 per revolution
disc speed	2400 rpm. counter clockwise
storage capacity	50×10^6 bits maximum

Details unit

data transfer rate	2.5M bits/s
average access time	33 $\pm$ 2m sec.

4.2 PHYSICAL CHARACTERISTICS

Width	480 mm
height	262 mm
depth	797 mm
weight	66 kg approximately

4.3 ELECTRICAL REQUIREMENTS

Mains voltage	240, 220*, 115, 110 AC single phase with earth
mains frequency	50 Hz; 60 Hz (optional)
power consumption	500 W

* normally installed.

4.4 ENVIRONMENTAL REQUIREMENTS

	Operating	Non-operating
Temperature	+16°C to +38°C	-15°C to +65°C
Thermal shock	0,2°C per minute	1°C per minute
Relative humidity	8% to 80%	5% to 90%
Air pressure	1 BAR + 5 to -30%	1 BAR + 5 to 50%

Input signals		Output signals	
pin*	signal	pin*	signal
48	$\overline{\text{AB 0}}$	24	$\overline{\text{IPC}}$
51	Ground	27	Ground
47	$\overline{\text{AB 1}}$	35	$\overline{\text{IPF}}$
50	Ground	38	Ground
46	$\overline{\text{AB 2}}$	23	$\overline{\text{SPC}}$
49	Ground	26	Ground
54	$\overline{\text{AB 3}}$	30	$\overline{\text{SPF}}$
57	Ground	33	Ground
53	$\overline{\text{AB 4}}$	29	$\overline{\text{CON}}$
56	Ground	32	Ground
52	$\overline{\text{AB 5}}$	02	$\overline{\text{UR}}$
55	Ground	05	Ground
60	$\overline{\text{AB 6}}$	34	$\overline{\text{USA 1}}$
64	Ground	37	Ground
59	$\overline{\text{AB 7}}$	03	$\overline{\text{USA 2}}$
63	Ground	07	Ground
36	$\overline{\text{USL}}$	28	$\overline{\text{AT}}$
39	Ground	31	Ground
10	$\overline{\text{CS}}$	01	$\overline{\text{RDDA}}$
13	Ground	04	Ground
11	$\overline{\text{HS}}$		
14	Ground		
17	$\overline{\text{CTS}}$		
21	Ground		
58	$\overline{\text{SUS}}$		
62	Ground		
08	$\overline{\text{WRDA}}$		
12	Ground		

*Pin numbers of the interface plug AM8-75p.

Table 1-1

X1215/16 (ABOVE SERIAL NUMBER 2000)

Cartridge Disk Drive Unit

Vol.II: Operation

PHILIPS Data Systems

1.1 GENERAL

The controls on the front panel are fail safe, and safety locks are present for protection of personnel and the unit.
The mechanical and electrical parts are contained inside the unit and are not be accessed by the operator.
The functions of the operator are the control of the unit by means of push buttons/indicators on the Operators' panel, and cartridge handling.
The Operators' panel (figure 2-1) comprises the following push button/indicators:

a) Power - indicator.
b) Start/Stop - push button and indicator.
c) Cartridge Exchange - indicator.
d) Fault-indicator.
e) Unit Ready-indicator.

The disc unit can be connected or disconnected with the mains supply by means of a power switch on the rear of the disc unit.

1.2 BUTTON AND INDICATOR FUNCTIONS

The following push buttons/indicators are present on the Operators' panel at the front of the unit:

Power	Indicator	When the indicator is lit it means that the mains supply is connected to the disc unit. The disc power supplies are energised.
Start/Stop	Push button/ indicator (momentary switch)	By pressing the Start/Stop button after the unit is activated (power-on), the unit can be placed in one of two modes. Start mode: Cartridge Exchange lamp off, Start/Stop indicator lamp is lit. Disc drive motor starts rotating. The cleaning cycle starts. Stop mode: Start/Stop indicator lamp is off. The disc drive motor stops rotating; finally the cartridge exchange lamp is lit.
Cartridge Exchange	Indicator	This indicator is lit if the cartridge can be replaced or installed.
Fault	Indicator	This indicator is lit if there is an unsafe condition. When the indicator is lit, it can be extinguished by stopping and restarting the disc unit.
Ready	Indicator	This indicator is lit if the unit is ready to operate. (Heads are loaded).

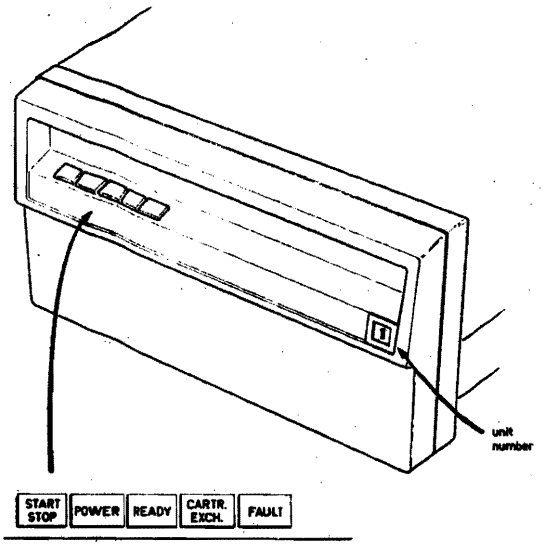

Fig. 2-1 OPERATOR PANEL

2.1 CARTRIDGE HANDLING AND STORAGE

It is important that the disc cartridge be properly handled and stored so that the recorded data are maintained. A damaged or contaminated cartridge can impair or prevent recovery of data and can result in damage to the disc drive.

CAUTION

DO NOT ATTEMPT TO INSTALL OR USE A CARTRIDGE WHICH IS SUSPECTED OF CONTAMINATION OR DAMAGE.

A disc drive which has been damaged or contaminated due to use of a defective cartridge should not be operated with other cartridged until the disc drive has been inspected and/or reconditioned by qualified service personnel.
The following methods will ensure maximum protection of disc cartridges.

1) Cartridges should have the bottom cover in place at all times when the cartridge is not inserted in a disc drive. Do not allow the bottom cover to accumulate dirt or other debris.
2) Cartridges can be stored either horizontally or vertically.

CAUTION

DO NOT PLACE CARTRIDGES IN A STACK CONTAINING MORE THAN 5 CARTRIDGES.

3) Avoid exposure of the cartridge to any magnetizing force.
4) Do not store the cartridge in direct sunlight. Temperatures outside the range of 33°F (0.6°C) to 140°F (60°C) should be avoided for non-operational storage.
5) If a cartridge is dropped, it should be inspected by a qualified service representative before it is used. Internal, as well as external, damage to the cartridge can result when a cartridge is dropped.
6) Cartridges should be labeled only in the handle recess area.
   Use the dustcover when no cartridge is installed.

2.2 LOADING (figures 2-2, 2-3 and 2-4)

To ensure proper operation and data reliability it is necessary that disk cartridges be temperature stabilized at the same temperature as the disk drive. Disk cartridges should stabilize at the disk drive ambient temperature for 2 HOURS.

It is important to note that optimum data reliability can only be obtained when the protective dust cover is installed on the disk drive, when no cartridge is installed.

a) Wait until the cartridge exchange lamp is lit.
b) Pull the disk drive out of the rack to the first stop position.*
c) Open up the two clamps.
d) Remove the dust cover.
e) Push the de-coupler in the handle of the cartridge to the side and by lifting the handle, the bottom cover can be removed.

   Note: Exercise extreme care when inserting the cartridge so as not to damage the cartridge and/or the disc drive.

f) Insert the cartridge into the correct position and fold the handle into its recess.

   Note: Correct positioning of the cartridge has been obtained, when the cartridge cannot be rotated or tilted.

g) Place the bottom cover, inverted, on top of the cartridge.
h) Close the two clamps.
i) Push the disc drive back into the rack.*

* Not by the stand alone model.

2.3 UNLOADING (figure 2-5, 2-6 and 2-7)

a) Stop the cartridge disc drive by pressing the Start/Stop button (light goes off).
b) Wait until the Cartridge Exchange light is on.
c) Pull the disc drive out of the rack to the first stop position.*
d) Open up the clamps.
e) Remove the bottom cover.
f) Push the de-coupler in the handle of the cartridge to the side, and by lifting the handle, the cartridge is removed from the holder.
g) Insert the cartridge into its bottom cover and fold the handle back into its recess.
h) Place the dust cover
i) Close the two clamps.

* No by the stand alone model.

Note: If the unit is not used for some time Start/Stop two or three times to properly clean the disc surfaces, without loading the heads.

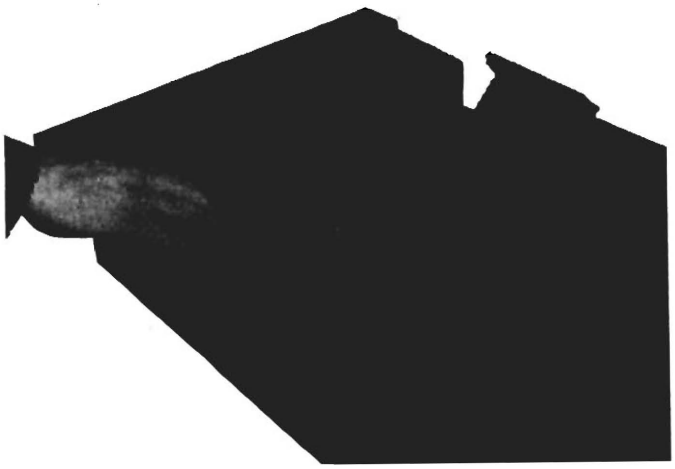

Fig. 2-2

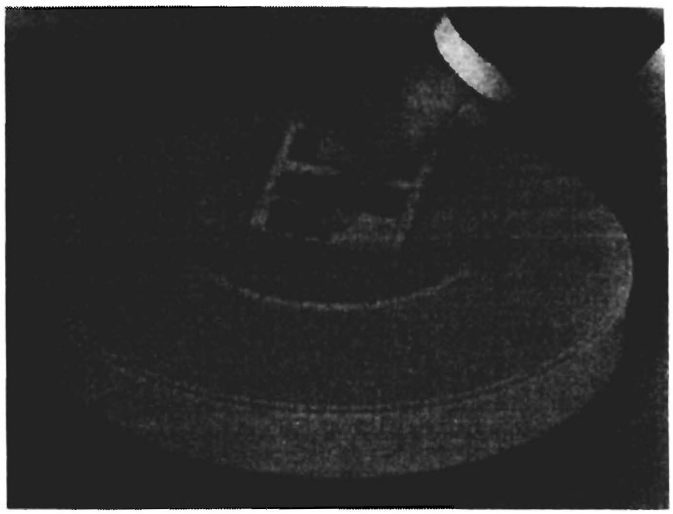

Fig. 2-3

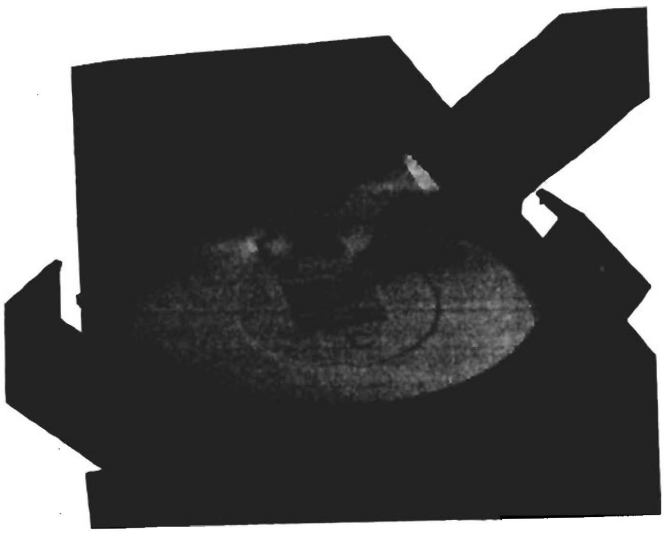

Fig. 2-4

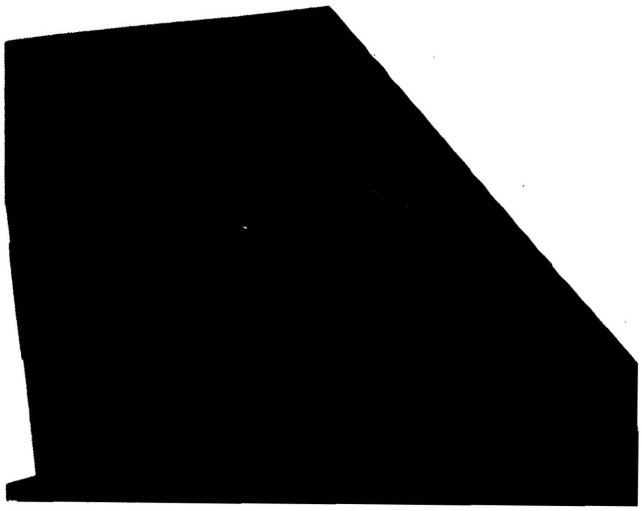

Fig. 2-5

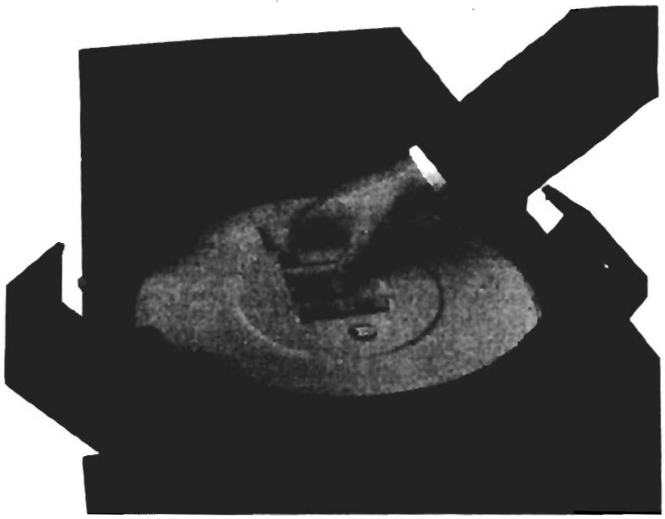

Fig. 2-6

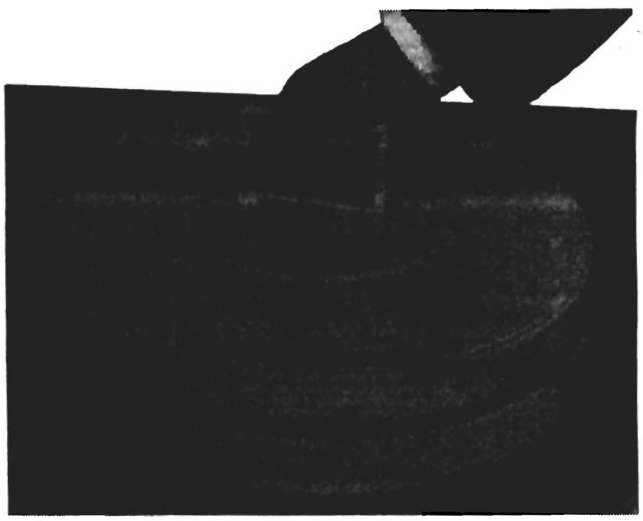

Fig. 2-7

The handling of the disc drive requires a starting and a stopping procedure.

3.1 STARTING PROCEDURE

a) Switch on the power at the rear of the disc unit. The power and Cartridge Exchange indicators are lit other 30 seconds.
b) Both clamps can be opened and the cartridge inserted.
c) Press the Start/Stop button on the Operators'panel. The Start/Stop indicator becomes lit.
d) Wait until the Unit Ready indicator is lit.
e) The unit is ready to accept signals from the Control Unit.

3.2 STOPPING PROCEDURE

a) Press the Start/Stop button on the Operators' panel. The Start/Stop indicator will be extinguished.
b) Wait until the Cartridge Exchange lamp becomes lit.
c) If it is necessary to change the cartridge, see section 2.2 of this volume then follow the starting procedure, section 3.1 (c) onward in this volume.
d) If the unit is required to be switched off, this can be done by means of the switch on the rear of the disc unit. The associated light will be extinguished.

X1215/16 (ABOVE SERIAL NUMBER 2000)

Cartridge Disk Drive Unit

Vol. III: Theory



Data
Systems

This section deals with theory of the CDD block diagrams (figure 3-1 and 3-2) are referred to when explaining the actions during operation.
The relationship between the main blocks of the CDD and the interfacing principles employed for communication between the Control Unit and the CDD are described in detail.
The functions are described in conjunction with the logic diagrams present in Volume IV.

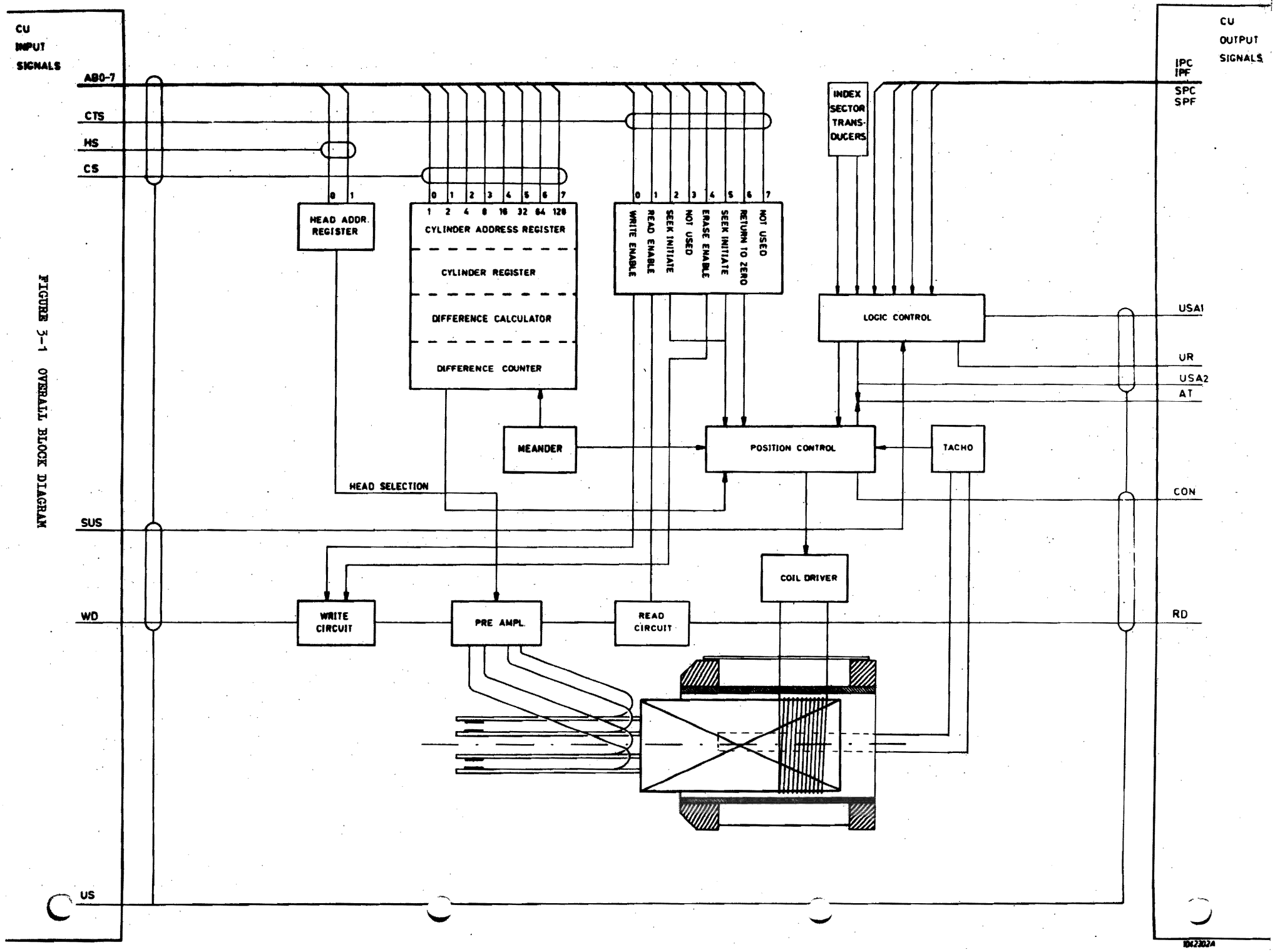

FIGURE 3-1 OVERALL BLOCK DIAGRAM

After the power has been switched on and the starting procedure initiated, some time elapses before the Cartridge Disk Drive (CDD) is ready. When the CDD is ready, the interface signal UR (Unit Ready) is made active. At such time, the Control Unit can select the CDD by means of the interface line US, (Unit Select). The Cylinder Select signal CS, together with the Address Bus lines AB0 through AB7 indicate the required cylinder address. The signal CTS (Control Select), together with signals AB2, AB5 or AB6 can initiate a seek action.

After the seek is finished, the interface signal CON (on-cylinder) is raised, indicating the heads are positioned on the selected cylinder.
At this juncture, a head is selected by the tag line HS (Head Selected), together with the interface bus lines AB0 and AB1. When the head has been selected, signal CTS is raised again, together with the interface lines AB0 and AB1, or AB4 to start data processing.

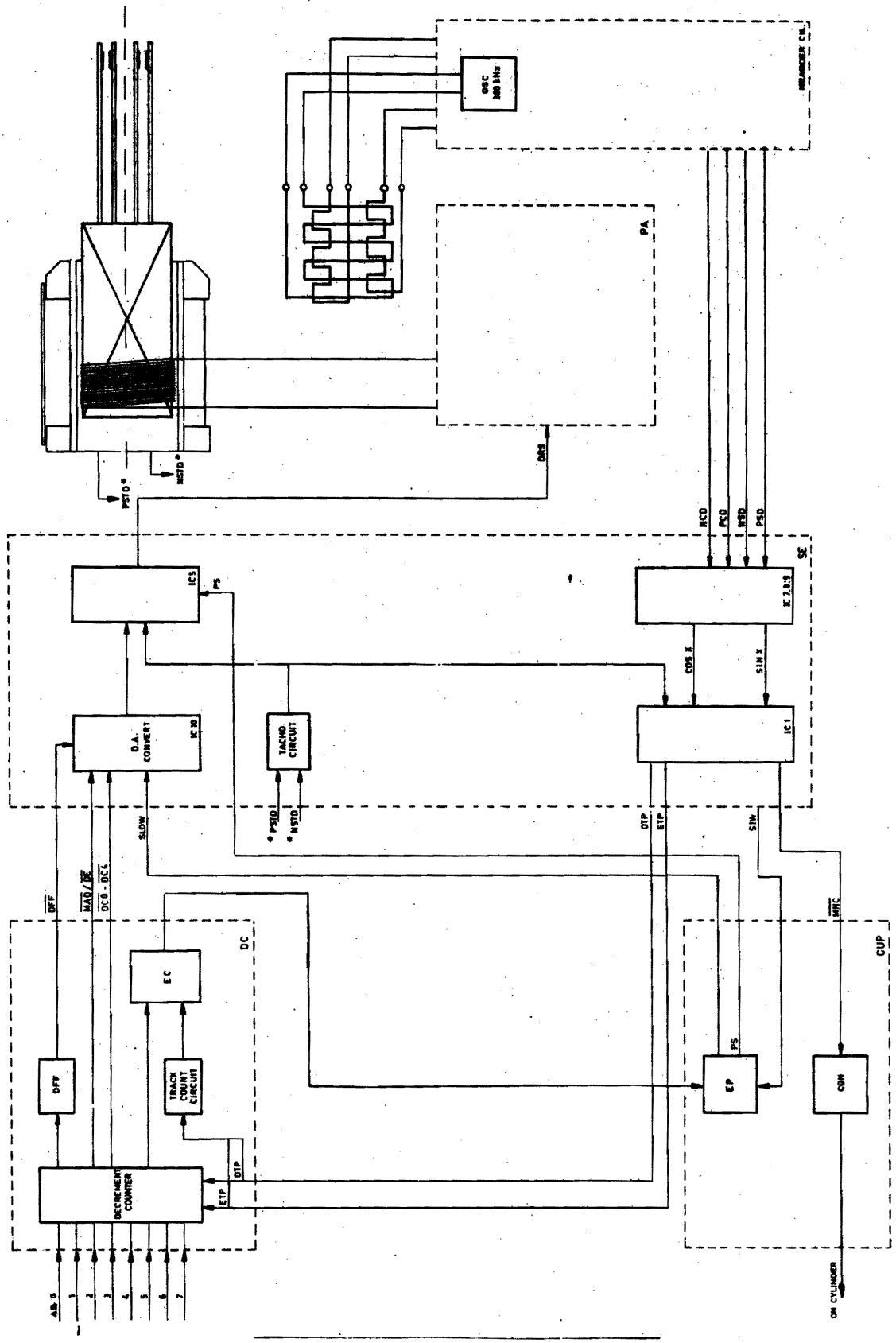

Figure 3-2 POSITION BLOCK DIAGRAM

Section 2 of this volume dealt mainly with the interface dialogue.
A more detailed description of the result of the dialogue is described here.

When the Cylinder Select command is received, the Cylinder Address register is compared with the Cylinder Register containing the last cylinder address. The result is stored either normally or inverted and sent to the Difference Counter.
Inversion only takes place if the direction of the seek is reverse.
The coil driver is activated via the Position Control logic and electronics. The current through the coil will move the head across the track until the Difference Counter has reached its pre-selected count. This count down is realised by the Meander circuit which gives a pulse for each track passed to step the Difference Counter.

Thirty-one or less cylinders before the selected cylinder the movement becomes controlled by the Difference Counter. The current is reversed and deceleration of the positioner ensues, following a pre-selected curve. The moment the count is reached, half a cylinder before the selected cylinder, the positioner is fully decelerated by a maximum current pulse. The control of the positioner changes from the Velocity mode to the Positioning mode, moving the heads to the track centre.
At this juncture, the interface signal CON is raised, enabling read or write actions to be performed.
The logic-control-block monitors all actions, detecting error or unsafe conditions.

Index pulses of the fixed disk are used to check the disk speed.
Other functions of the index and sector pulses are beyond the scope of this manual. All input and output interface signals (except the index and sector pulses), signal AT (Attention) and SUS (Set Unsafe) are gated with the selection signal US (Unit Select).

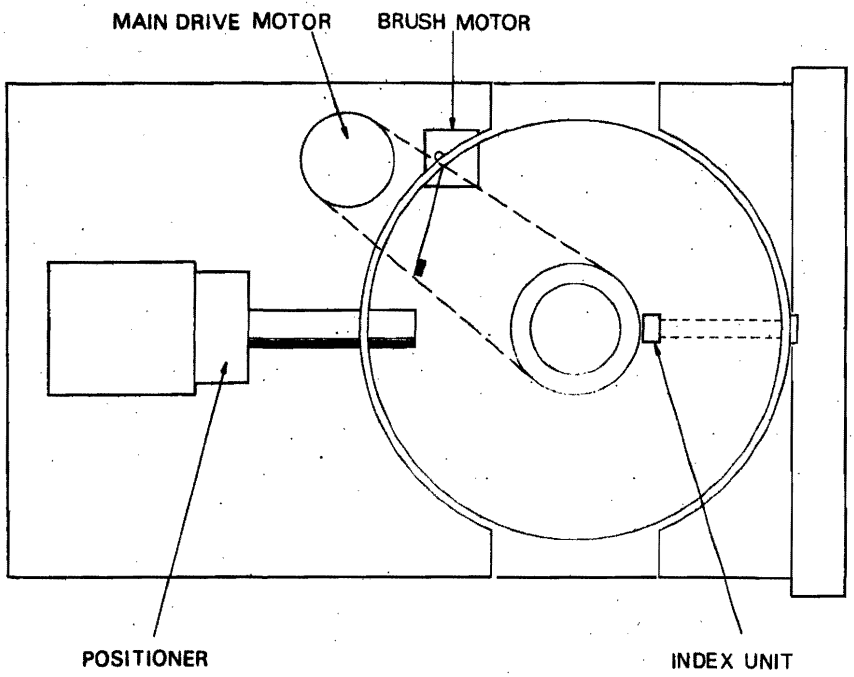

Figure 3-3 PRINCIPLE COMPONENTS

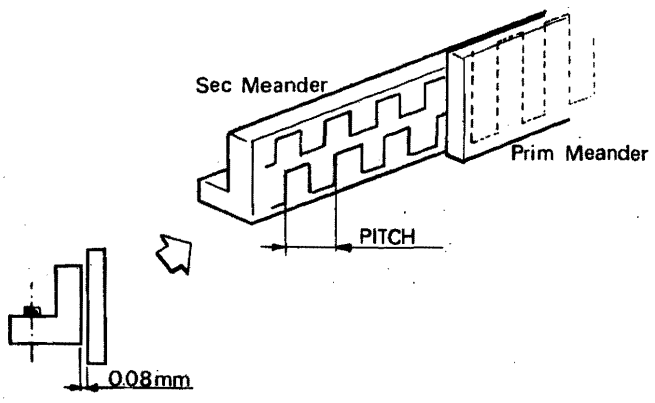

Figure 3-4 MEANDER TRACK PITCH

In the description of a normal Power-on and Start cycle a number of main blocks present in the cartridge disk drive are described.

4.1 MAIN DRIVE MOTOR

If a cartridge is placed on the disk drive and the unit started, the asynchronous main drive motor is started. A belt drives the spindle on wich the cartridge is placed. The fixed disk is kept in position at the lower part of the spindle and centre, if properly fixed, while the cartridge is mounted on top of the spindle.
Within sixty seconds of starting the main drive motor the cartridge will be revolving at its'nominal speed of 2400 rpm.

4.2 BRUSH MOTOR

2.5 seconds after the main drive motor is started, a timing signal activates a small low speed motor (about 300 rpm). This motor is geared down so that 3 revolutions of the motor occur during the remaining 20 seconds whilst four brushes sweep over the four surfaces during the Claining cycle.

4.3. INDEX/SECTOR TRANSDUCERS

For the fixed disk as well as for the cartridge a magnetic transducer is present which detects the slots in the index/sector ring of the cartridge and the index/sector of the fixed disk.
The latter ring is fixed to the spindle. In the electronics the detection of slots is transformed into logic pulses.

4.4. POSITIONER

Providing that the correct speed has been attained by the spindle, the unit starts the first seek so that the positioner moves inwards.
The positioner is one of the critical parts of the disk drive, and is balanced out to overcome vibrations and incorrect loading of the heads. The positioner incorporates a coil, a speed tranducer a prime meander circuit and the heads.
By sending a current through the voice coil in one direction, the carriage is moved in that direction. When reversing the current the carriage movement is reversed.

4.5 SPEED TRANDUCER

The speed tranducer consists of a magnet fixed on the position arm, moving through the centre of a coil which is fastened in the positioner house.
The voltage induced in the coil is directly related to the speed of the positioner arm. This voltage is used to control the speed.

4.6 DISPLACEMENT PICK-UP SYSTEM

For measuring the displacement of the carriage a "meander system" is applied.
The meander consits of 2 printed cards. One card is mounted on the carriage and contains a coil which is printed in meander form on the card. This one is called the primary meander.
The other card is fixed on the base plate and contains two coils, which are printed, also in meander form. These are called the secondary meander A and B.

When the positioner moves, the prime meander passes the second meander. The pitch of the meander tracks is twice the track distance (figure 3-4). Alle tree meander circuits have voltages with a frequency of 300 kHz. The secondary meander voltages become modulated by the movement resulting in, after demodulation, a sine-wave and a cosine wave. These signals are sent to the positioner control and track count circuits.

4.7 TRACK ZERO INDICATOR

The track zero indicator is an opto- electronic device which is mounted on the base plate. When a "flag" which is mounted on the carriage passes the indicator, the logic output of the indicator is inverted. The output signal of the indicator, in combination with some other logic signals determines the position of track 000.

General

Several Cartridge Disk Drives may be connected to one Control Unit.
Each unit is selected by the interface signal Unit Select (US), and is connected to the Control Unit with an asymetrical cable, or with a coax-cable (2L00).
The principle of the interface is the so called "STAR TYPE".

5.1. LOGIC LEVELS

The "0" logic level shall be between 0V and + 0.8V
The "1" logic level shall be greater than + 2.4V (nominal +4.5V)
A signal with an inversion bar ($\overline{X}$) is active for a logic "0".
A signal without an inversion bar (X) is active for a logic "1".

5.2 INPUT SIGNALS

The interface input signals of the disk drive unit are:

a) Unit Select (USL)
b) Three tagline signals: Cylinder select (CS)
Control select (CTS)
Head select (HS)
c) Eight Address & Busline (AB0-AB7)
d) Set Unit Unsafe (SUS)
e) Write Data (WRDA)

5.2.1 Unit Select signal

With the Unit Select signal a certain disk drive can be selected.

5.2.2. Tagline and Address Busline

Although in principle data can be written on an arbitrary place of the disk surface, the data normally written on fictive concentric circles namend tracks.
The pitch of these tracks is determined by the meander system.
The CDD has a maximum of 204 tracks per disk surface. (408 for the X1216)
The normal procedure is that the control unit, by combination of tag line and address & busline signals, indicates on which track the heads should be, then selects one of the four heads and, when the heads are settled on the right place, gives write or read commands.
Figures 3-6 and 3-7 show how the various combinations of tagline signals and address & busline signals are interpreted by the disk drive unit

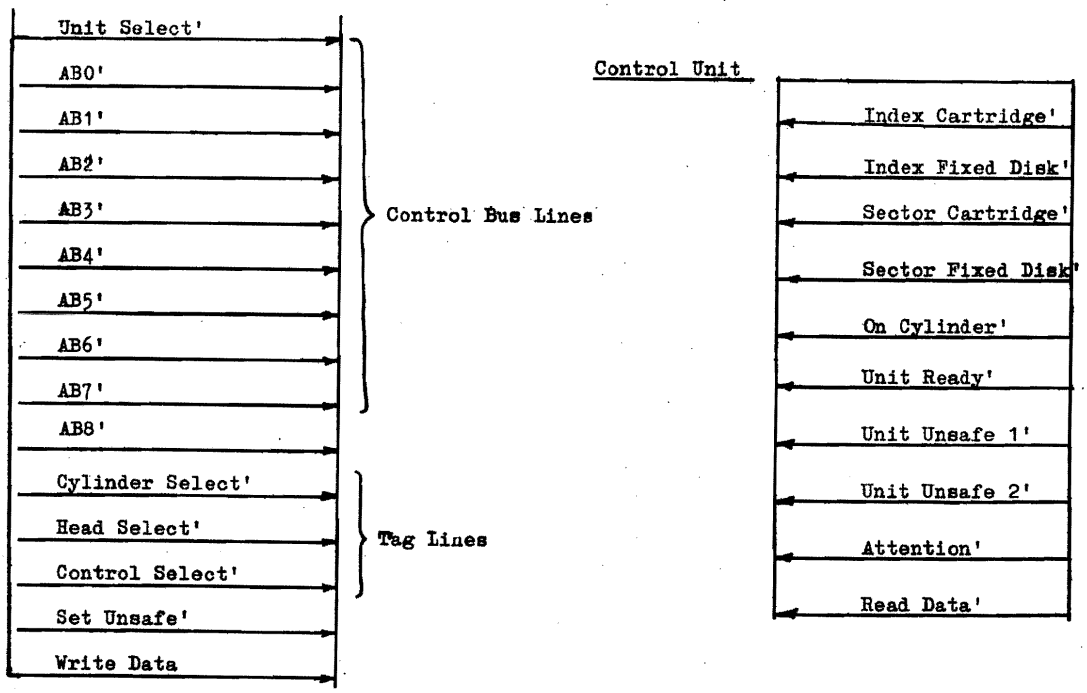

Figure 3-5 I/O INTERFACE

	Cylinder select signal active	Head select signal active	Control select signal active
Add. & Busline AB0 active	1	0/1	Write enable
" AB1 "	2	2/3	Read enable
" AB2 "	4	Not used	Seek initiate
" AB3 "	8	Not used	Reset unsafe
" AB4 "	16	Not used	Erase enable
" AB5 "	32	Not used	Seek initiate
" AB6 "	64	Not used	Return to zero
" AB7 "	128	Not used	Not used
" AB8 "	256	Not used	Not used

Figure 3-6 Tag and Control Bus Lines

Add. & Busline AB0	Add. & Busline AB1	Head Select signal	Selected Read nr.	Corresponding Disk surface	
Not active	Not active	Active	0	upper	cartridge
Active	Not active	Active	1	lower	
Not active	Active	Active	2	upper	fixed disk
Active	Active	Active	3	lower	

Figure 3-7 Head selection

Remark: The combination of Address & Busline signals and the Cylinder Select signal indicates the new track to which the haeds should go.

Example
A seek to cylinder 50 is executed and a read enable command is given for the lower head of the cartridge.

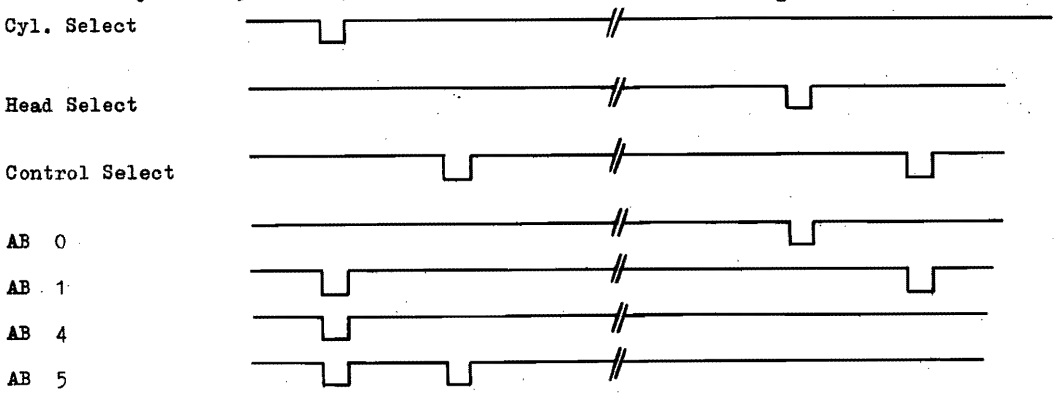

Figure 3-8 Seek to cylinder 50

logics.
An example explains the use of these lines clearly (Fig 3-8)

5.2.3 Set Unit unsafe.

This command can be given by the Control Unit in case of power failure of the Control Unit.
The CDD turns to the unsafe 2 mode, which means that the heads are retracted and the write electronics are disabled so that no damage either to Disk Drive Unit or data can occur.

5.2.4 Write Data

The write data signal consists of serialized data to be written on a disk surface.
Fig. 3.9 shows a write data signal.



Figure 3-9

a) Duration of both clock and data pulse (if present) - 100 nsec
b) Time between a clock and data pulse - 100 nsec
c) Duration of a bit cell - 400 nsec
A bit cell is the area between the beginning of a clock pulse and the beginning of the next clock pulse.

5.3 OUTPUT SIGNALS

The output interface signals of the disk drive unit are:

a) Index Signal Cartridge (IPC)
b) Index Signal Fixed Disk (IPF)
c) Sector Signal Cartridge (SPC)
d) Sector Signal Fixed Disk (SPF)
e) On Cylinder (CON)
f) Unit Ready (UR)
g) Unit Unsafe 1 (USA1)
h) Unit Unsafe 2 (USA2)
i) Attention (AT)
j) Read Data (RDDA)

5.3.1 Index Pulse Cartridge Fixed Disk.

Once per revolution, an index pulse becomes active at the moment the index slot passes the index and sector transducer.
This pulse provides the physical beginning of each track and is not gated with the unit select signal.

5.3.2. Sector Pulse Cartridge (Fixed Disk)

Each time a sector slot passes the index and sector transducer, the beginning of a new sector is signalled.
With the aid of sector pulses a track can be divided into pieces.
This signal is not gated with the Unit Select signal.

Note: There is no relation between the index/sector signals of the cartridge and the index/sector signals of the fixed disk.

5.3.3 Unit Ready signal

The activation of this signal indicates that the CDD is ready to operate, that is to say it is ready to receive instructions and to transmit such output signals as are not gated.
This signal becomes active when:
- a cartridge has been inserted,
- the disk has attained a speed of 2400 rpm, nominal,
- when the heads are loaded for the first time, and the drive is completing the first seek.
The signal is deactivated when the operator stops the driver.

5.3.4 On Cylinder

This signal, when active, indicates that the heads are positioned and the seek operation is finished. The unit can accept read/write or another seek command.

5.3.5 Unit unSAfe 1

This signal becomes active when the positioner drifts away from the correct track position. In this situation the unsafe 1 procedure is entered and the following series of actions are carried out:
- write protection is set,
- the heads are returned to track 000,
- the unsafe 1 signal is set,
- when the heads are at track 000 an Attention signal is sent.
The Unsafe 1 signal can be reset by issuing a Return To Zero command or, by using a Reset Unsafe command (optional).

5.3.6 Unit UnSafe 2

When the Unit unsafe 2 signal becomes active it indicates that an unsafe procedure has been carried out as result of one or more of the following conditions occuring in the CDD:

1) there is write current but no erase current,
2) there is erase current but no write current,
3) there is write and/or erase enable when the heads are not on cylinder,
4) there is write and/or erase enable at the same time as there is read enable,
5) there is alternating write current in only one half of a head coil,
6) more than one head is selected,
7) the heads pass the minus 001 track position, traveling in the retracting direction, without the CDD stopping,
8) the speed of rotation of the disk is incorrect,
9) an emergency brake is applied as a result of one of the following conditions:
   a. the positioner speed exceeds a specified maximum,
   b, the seek time is too long,
   c, mains power is not present,
   d, D.C. voltages + 12V, - 12V and + 5V are not present,
   e, the Set Unsafe signal is active.

The above listed conditions cause the Set Unsafe 2 procedure to be entered if they persist for a period in excess of the following times:

conditions 1 and 2: 60 µsec
all other conditions: 0,1 µsec.

The unsafe 2 procedure involves, in the sequence given, the actions shown below:

- the Unsafe 1 signal is set
- write protect is set after maximal 150 µsec.
- positioner, if moving, is slowed down
- heads are returned to the retracted position.

The setting of the Unsafe 2 signal results in the setting of the Attention signal.
The Unsafe 2 signal may be reset only by stopping and restarting the Disk Drive Unit.

5.3.7 ATtention.

The activation of the Attention signal will indicate to the Control Unit that a change of positioner status has occured within the Disk Drive Unit. The signal is activated in three situations, these being:

1. When a seek operation has been completed, including a seek to zero,
2. when the Unsafe 1 signal is activated,
3. when the Unsafe 2 signal is activated.

The Attention signal will remain active until the operator switches off the Disk Drive Unit or until either a read enable command is given or a seek is initiated. A seek is initiated when:

- a seek command is given,
- a return to zero command is given,
- an unsafe 1 condition exists,
- an unsafe 2 condition exists.

The Attention signal is not gated by the Unit Select signal.

5.3.8 Read DAta

The Read Data line is used to transmit recovered read data from the Disk Drive Unit to the Control Unit. The data consists of a stream of serialised bits.

6.1 SERVO SYSTEM

The servo system is used to position the heads at required cylinder and to maintain this position. Functional parts of the system are:

1. the voice-coil.
2. The Power Amplifier (PA).
3. The Servo Electronic
4. the meanders
5. the speed transducer
6. the track zero indicator
7. the logic control

In this Servo System two different control loops give the possibility of directing the heads and maintaining them in position.

1. The speed servo loop.
   Is active during a seek and moves the heads in the neighbourhood of the end position resulting in a low the end position resulting in a low final speed.
2. The position servo loop.
   Is active when the heads are naer the desired cylinder to locate and maintain them in this position.

6.2 VELOCITY AND ACCELERATION

When re-positioning over 64 tracks or less mainly acceleration and deceleration forces are used. The friction force will be ignored in order to position over any distance in the shortest possible time. In the first part of the movement a maximum acceleration is needed, in the second part a maximum deceleration is needed.

The velocity curve is as follows.

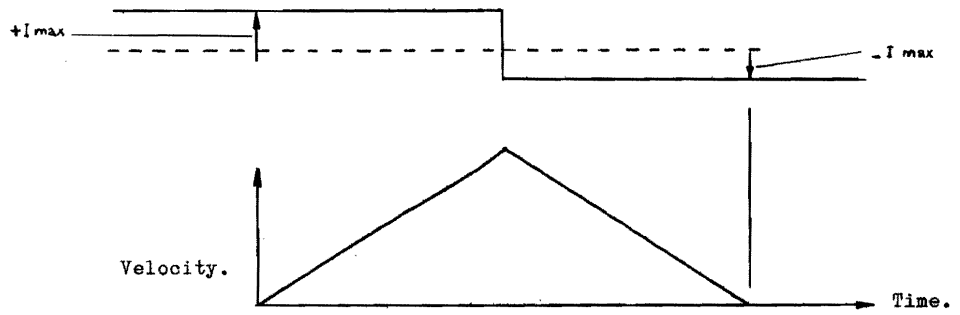

Figure 3-10

When the movement will be more than 64 tracks a flat top is made in the velocity curve, during this period there is no dissipation in the voice coil. A slight increase in the random access time results from this measure.

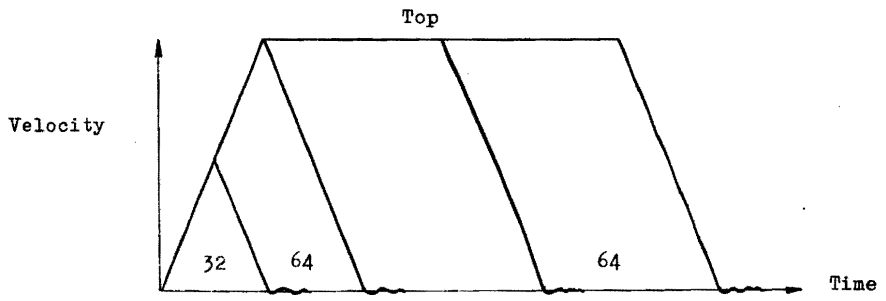

Figure 3-11

The flat top is made in suc a way that with a maximum count, usually 200 cylinders to travel, the maximum velocity will be reached within the first 32 cylinders.

6.3 MEANDER SYSTEM

The meander system consists of two printed cards (figure 3-12)

1. Primary, which is mounted on the carrige and c ntains one coil in a meander form.
2. Secondary, fixed on the base plate and containing two meander forms A and B on the card.
   The meander forms A and B are shifted half the track pitch from each other.

When the carriage moves the primary meander passes along the secondary meander.
The pitch of the meander "t" is twice the track distance. The clearance between the meanders 0.08 mm. The primary meander is fed with a 300 khz. sine wave voltage. In the secondary A and B meanders the inducced sine wave is amplitude modulated. The amplitude on the position of the primary with respect to the secondary meander.

Throughout, the amplitude depends on the cylinder positioning. The output voltages are demodulated into the signals sin X and cos X on the meander card.

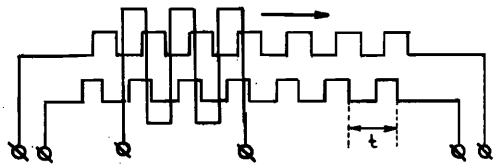

Figure 3-12

6.4 VOICE-COIL SYSTEM

The required acceleration and decelaration forces are generated with a voice-coil system. The voice-coil is mounted on the carriage and is rectangular in form.
The short voice-coil can move in a long magnetic field.
Depending on the direction of the current through the voice-coil it is accelerated or decelerated.

The current through the voice-coil is determined by the Power Amplifier by means of a feedback system.
The Power Amplifier consists of two parts:
a) The Power Amplifier card which is mounted in the electronic cage.
b) A power stage, driven by the Power Amplifier card in turn driving the voice-coil.
   The transistors of the power stage are mounted on heatsinks at the rear of the disk unit.
The Power Amplifier card obtains its input from form card SE.

6.5 SERVO OPERATIONS

To generate a required speed.
The number of cylinders which have to be passed during a seek is stored in the Difference Counter, DC0-DC7. During the seek this counter is decremented by one each time a track is passed, this is done by the count pulses derived from the SINX and COSX meander signals.
The 5 least significant bits of the DC counter, DC0 - DC4, are connected to a digital / analoque concerter, which converts the contents of DC0 - DC4 into an analoque value. DC0 - DC4 are only active if the contents of DC is less than 32, in other cases the output of DA is set to maximum by the signal $\overline{MAD}$.

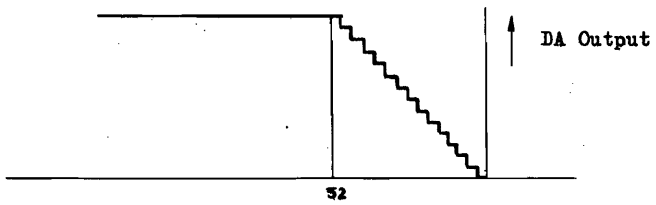

Figure 3-13

The D/A conventer output voltage represents the required speed of the positioner as a function of the position. (When the contents of the difference counter is greater than 32 the voltage will be increased by an extra voltage produced by the signal DE/(MAD).

Figure 3-15 shows that the speed may be high if the distance is far from the final position and, when the final position is approached the required speed decreases. (V is added to shorten the positioning times over long distances).

The non-linear form of the "deceleration curve" is determined by the requirement that the deceleration must be constant during the deceleration of the positioner.

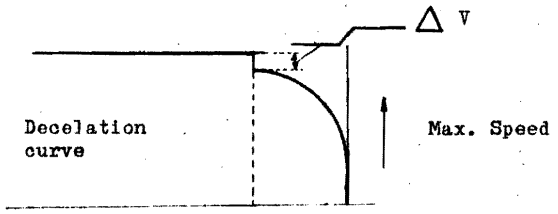

Figure 3-14

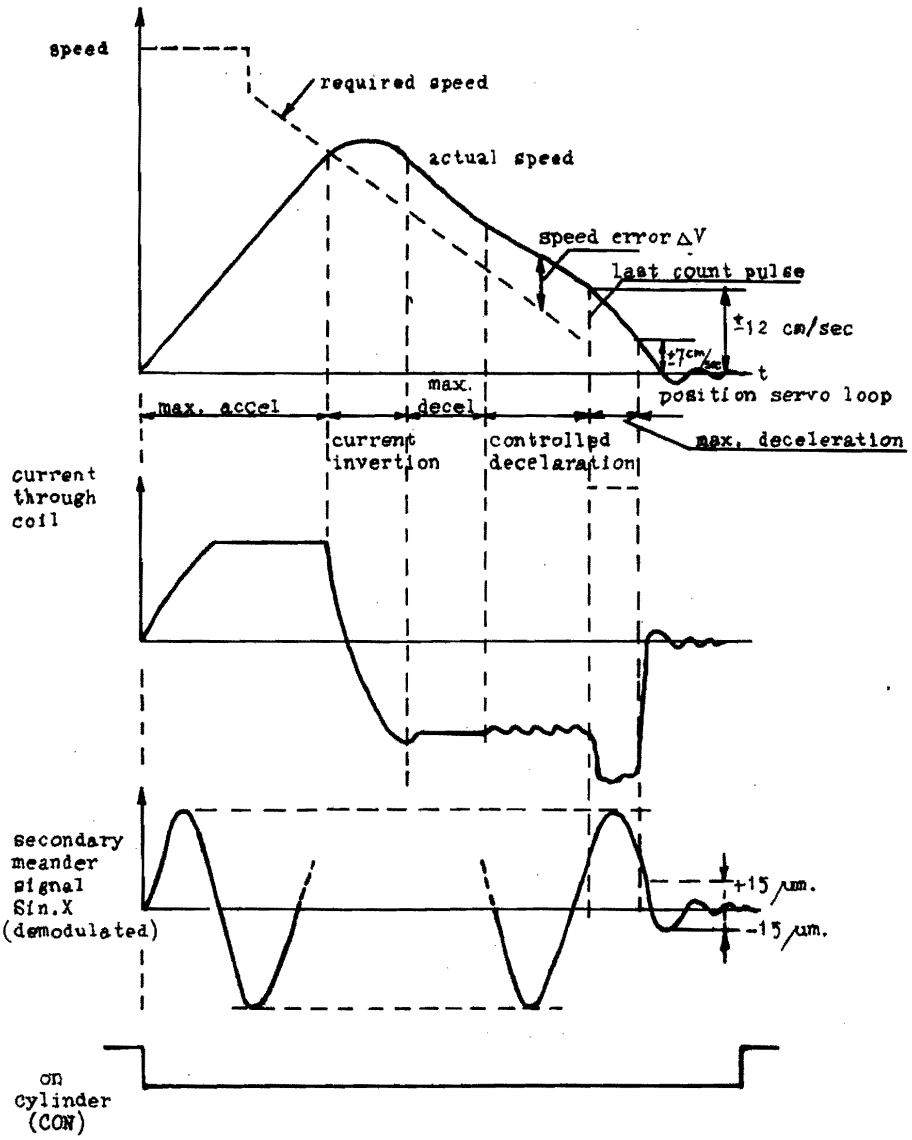

Figure 3-15 VELOCITY DIAGRAM

The actual speed is compared with the required speed. The actual speed is measured by the speed transducer. The difference in voltage between actual speed and required speed drives the Power Amplifier.
As the servo system is a closed (feedback) system, the servo system ensures that the difference between actual speed and required speed is as small as possible.

Actions during a seek.

1. The speed servo loop will be switched with the signal PS.

2. The big difference between the required speed and the actual speed causes maximum acceleration of the positioner.

3. When the actual speed equals the required speed the current is inverted in the case of a seek of less than 64 tracks.
   In the case of a seek over more than 64 tracks the voice-coil current will be approximately 0 during the flat top of part the velocity curve. Thirty two tracks before the required position the current is inverted.

4. The time necessary to invert the voice-coil current is relatively high so, after inversion of the current, the required speed will already have decreased slightly. Therefore, the positioner will have maximum deceleration for a short time; until the required speed is reached.

5. After the required speed is reached the deceleration will be controlled by the required speed.

6. At the moment that the last count pulse OTP or ETP appears, half track distance before the final position, the actual speed will be approximately 12 cm/sec., independent of the distance covered.

7. A short period of maximum deceleration will follow, produced by the signal MAD.

8. When the actual speed is less than 7 cm/sec., indicated by the signal SIW, the signal PS will activate the position servo loop.

9. The exact position of the heads with respect to the track centre is indicated by the SINX signal.

10. The voltage level indicating the distance from the track centre is proportional to the distance change, and is fed to the servo system.

11. The servo system locates the positioner on the track centre. When it is settled within 10 µm. of this centre after some delay (1.5msec) the "On Cylinder" signal appears.

6.6 POSITION SERVO LOOP

The position servo loop is initiated less than half a track before the desired cylinder.
Half a track before the desired cylinder maximum deceleration of the positioner is produced by the signal MAD. When the speed has fallen to a certain level the signal SIW sets and causes the servo system to enter the position servo loop.
In the position servo loop the distance between the momentary position and the track centre is measured and converted into a voltage (SINX).
This voltage is fed to the power amplifier which, in turn, drives the positioner to the track centre.
Because this would result in an undamped vibration around the track centre a differentiating circuit is added to provide the necessary damping.

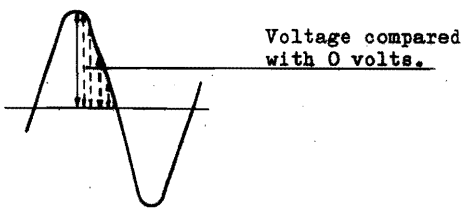

Figure 3-16

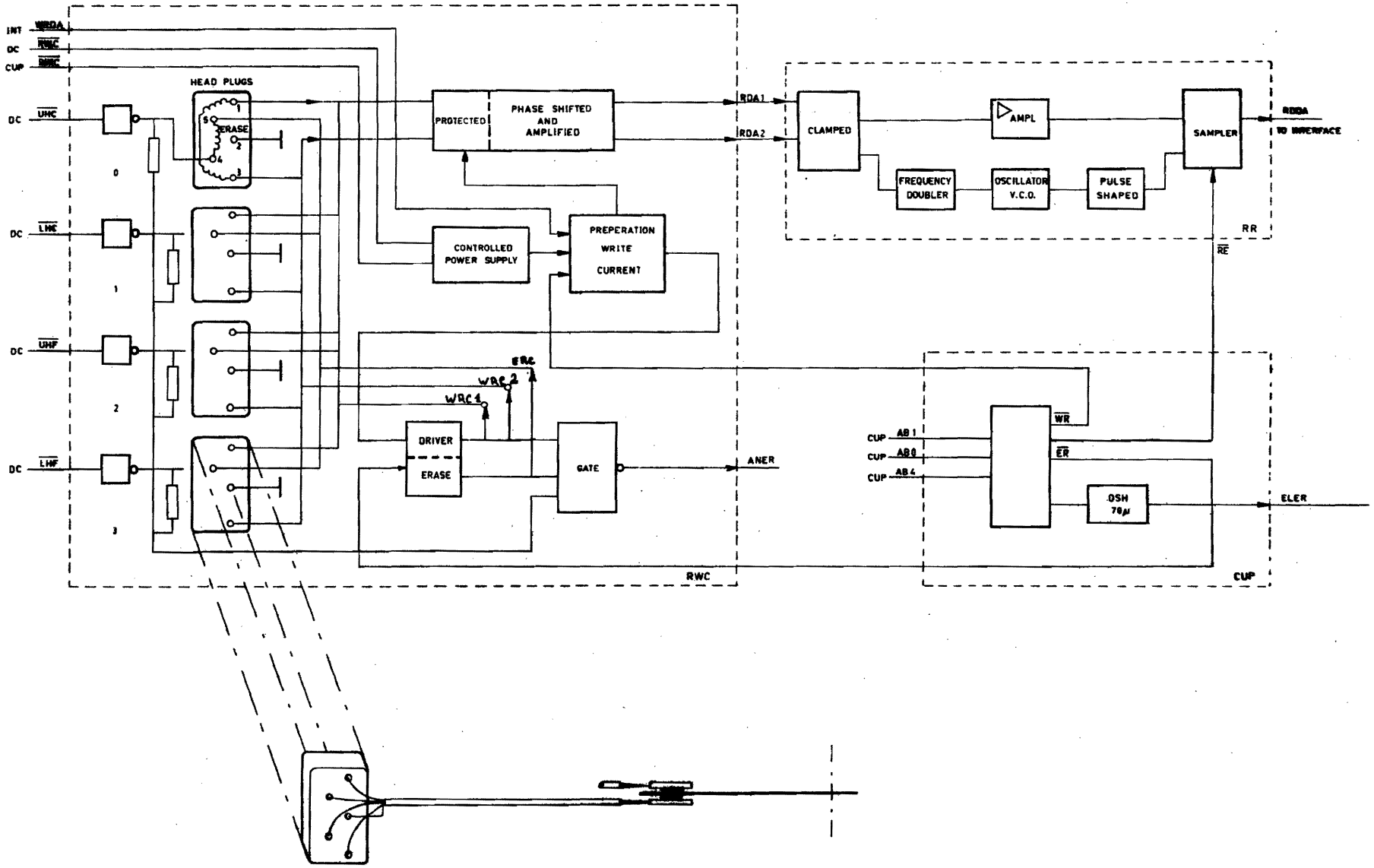

Figure 3-17 HEAD/WRITE

6.7 ADDITIONAL CONTROL SIGNALS

To reverse the direction of movement the output of the DA converter is inverted by the signal $\overline{DFF}$ (Direction of Force Forward).

For special seeks (return to zero, reverse to retracted) the DA convertor is kept on a low level by the signal SLOW.
The positioner then moves with a speed of 10 cm/sec.

Because the displacement voltage is a sine wave as a function of the position, signal SINX has to be inverted if the positioner is located on an odd numbered track, In that case the logic signal SPE (Select Positive Edge) is inactive.

6.8 WINDOW FUNCTIONS

The servo electronics issues several logic signals according to the analogue situation.
These functions are performed by windows and comparators.
A window is looking at the absolute value of its' input voltage and delivers a logic signal when the input voltage exceeds a certain level, called the threshold level.

A comparator only looks at the sign of the input voltage. When the input is positive it delivers a logic "0" and when the input is negative it delivers a logic "1".

Window signals are:

- SIW (Speed In Window), sent to the control logic which, in turn, gives PS. The threshold levels are set to equal a speed of approximately 7 cm/sec.
- ETP (Analoque signal SINX in window). Threshold levels indicate a displacement of approximately 15 /um.
- OTP (Analoque signal COSX in window). Threshold levels indicate a displacement of approximately 15 /um.
- $\overline{MNC}$ (Mechanical on Cylinder). The speed voltage is amplified and applied on a very small window indicating a speed 1.2 cm/sec.
  The displacement voltage is applied to small window indicating 10 /um. (approximately).
  The outputs of both windows are combined in such a way that $\overline{MNC}$ is active when both speed and displacement are in their windows.

6.9 RECORDING PRINCIPLES

The change of the magnetic field in the head from one direction to the other produces the directional field changes on the magnetic disk. The current through the coil will never stay zero while writing is taking place, but is always maximum one way or the other ('non return to zero' principle). A binary 'one' is identified by two pulses in a bit cell period and a binary 'zero' by one pulse during a bit cell period (one magnetic change on the surface). The frequency for recording a 'zero' is 1.25 Mhz. and for a 'one' it is 2.5 Mhz.

6.10 WRITE OPERATIONS (Figures 3-17 and 3-18)

Information can be written on the disk by sending a current through one or the other half of the read/write coil of the selected head.
Because of this current the magnectic coating of the disk is magnetised on that particular place in one or the other direction, depending on which half of the head coil the current is flowing in.
The written track is narrowed by an erase gap to prevent track overlap.
Before writing can be initiated one of the heads must be selected.
By activating the interface signals AB0 and CTS, the signal WR (write enable) becomes active. By activating the signals AB4 and CTS, the signal ER (erase enable) becomes active. Because the erase gap is physically behind the read/write gap, there is, for proper operation, some delay between the activating and deactivating of the signals WR and ER.
When the signal WR is active, information can be written on the disk.
This information, on the interface line, consists of clock pulses and data pulses, which, in the disk drive unit, are "divided by two".
The "divided by two" signal is written on the disk: One logic state of the signal corresponds with the current through one half of the head coil, the other logic state corresponds with the current through the other half of the head coil. See also figure 3-18.
Fig. 3-27 shows a flow diagram of head selection and write operation.

When writing on tracks 128-203, (256-406), the write current is reduced because of the higher density of flux reversals on the inner tracks. The logic signal RWC (reduce write current) activates this reduction.

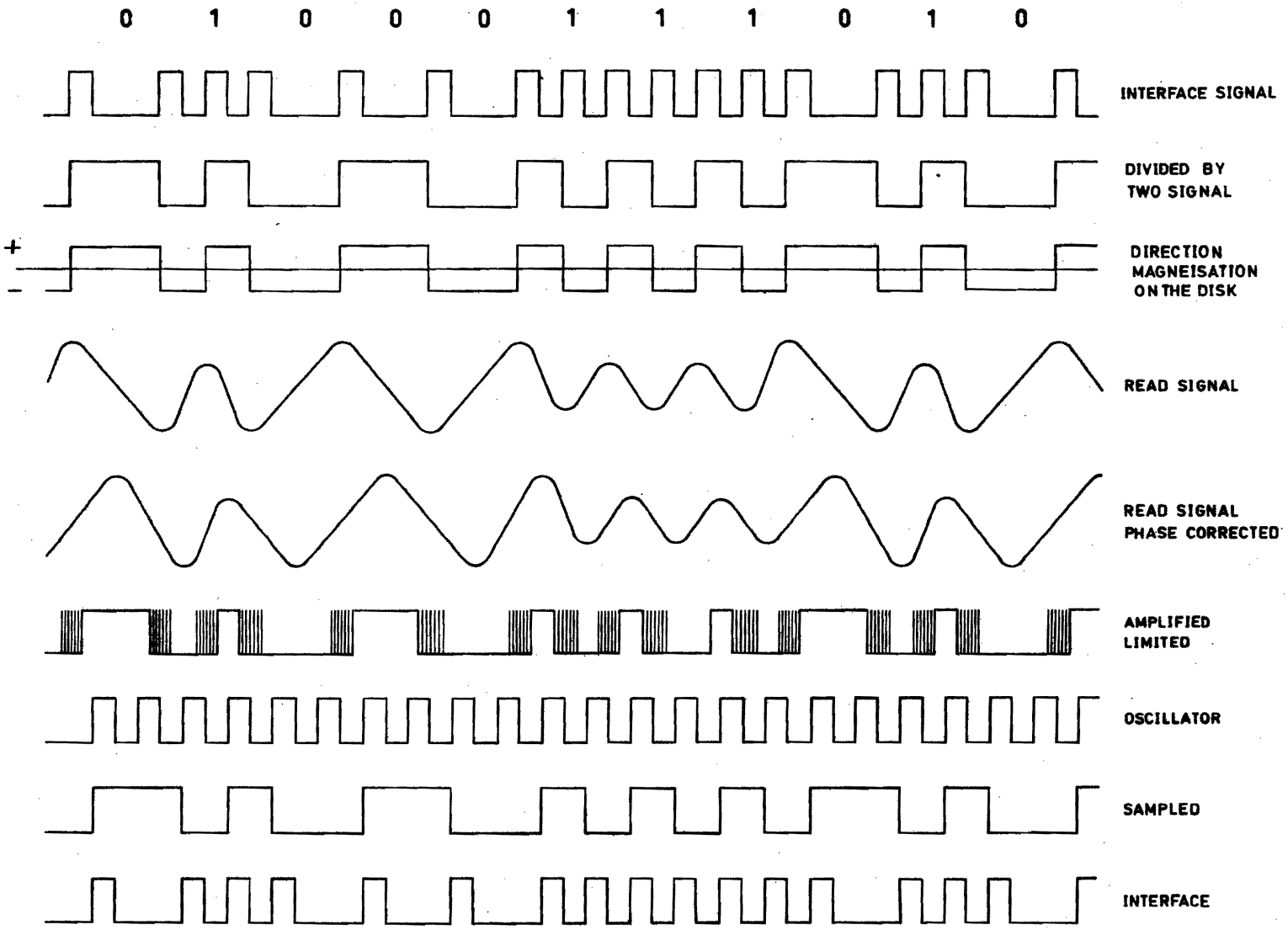

Figure 3-18 WRITING/READING/RECOVERING

6.11 READ OPERATION (Figures 3-17 and 3-18)

The same head coil is used for writing, and reading.
When reading, every reversal of magnetic flux direction induces a voltage in the read/write coil. In the read pre-amplifier a 90° phase-shift of the head signal takes place. In this way zero-crossings of the signal correspond with magnetic flux reversals, and peak detection can be adopted. Before phase-shifting the head signal is amplified (150 x). After phase-shifting the signal is amplified another 100 times. The signal is then sent to the Read Recovery card and limited.
Realising that mechanical actions are involved, a circuit is incorporated to stabilise the jittering pulses received from the head.
An oscillator circuit of twice the highest received frequency (2.5 MHz) used to sample the incoming pulses in the following way.
The oscillator circuit consists of a frequency doubler, and a resonant circuit tuned for a frequency of approximately 5 MHz. The frequency doubled input pulse, initiates, via a transistor, the resonant circuit.
The output of the voltage controlled oscillator circuit is amplified and mixed with the input data signal for sampling.
The sampled data pulse has the frequency of the input signal and the stability of the oscillator circuit used.
A one-shot with a pulse-width of 100 ns, generates a pulse on any data transition for the required interface signal RDDA (Bit Cell configuration).

6.12 READ/WRITE PROTECTION

As the storing of data on the disks is very important checks are incorporated in the read/write electronics to ensure the proper operation of the read/write actions. As soon as a check becomes active, the write channel is blocked.
The write channel is blocked when
a) There is write current and no erase current during more than 60 µ sec.
b) There is erase current and no write current during more than 60 µ sec.
c) More than one head is selected.
d) Read and write enable or erase enable at the same time.
e) Alternating write current in only one half of a head coil.
f) Read enable, write enable or erase when the positioner is moving.

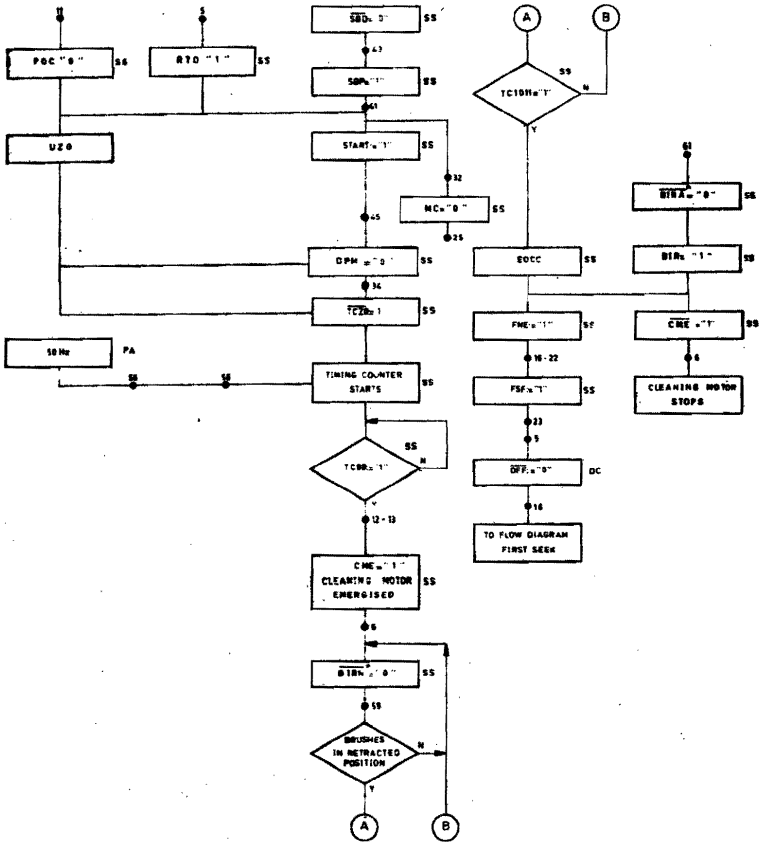

START

Figure 3-20

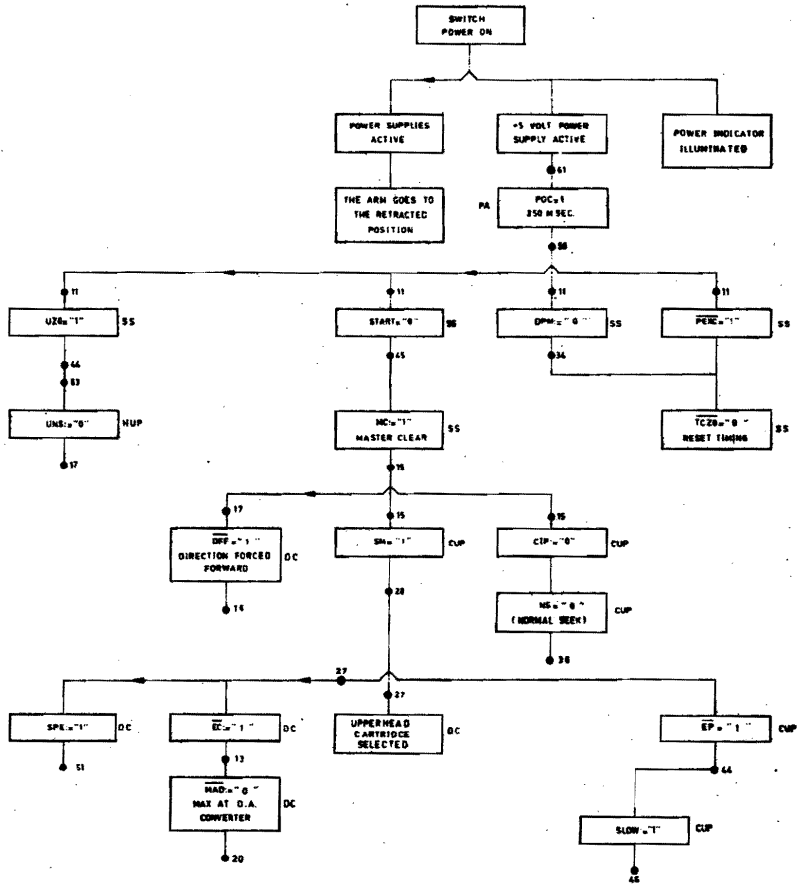

POWER ON

Figure 3-19

The following paragraphs describe in detail the logic operation of each of the functional elements. The descriptions are generally divided into different parts, reflecting the primary functions. The functional diagrams in Volume IV should be used in conjunction with this section.

7.1 POWER ON (Figure 3-19)

By switching the Power button at the rear of the disc-unit, the power-indicator will light, the positioner goes to the retracted position and the power supply becomes active.
When the power supply is active, the signal POC (Power On Clear) is "1" for more than 60 ms. This signal resets the flip-flops UNS (Unsafe), EPM (Energise Pack Motor) and Start. The relay which connects the electronic brake to the main drive motor is energised as well as the lock magnet which holds one of the clamps and the positioner block magnet. The signal POC sets the flip-flop PEXC (Preparation Exchange of the Cartridge).
POC resets the flip-flop UNS (Unsafe report flip-flop) by way of UZ0 and the flip-flop START by way of SZ0 and produces the signal MC (Master Clear) which has the function of clearing the unit. It resets the flip-flop DFF (Direction of Force Forward) and the flip-flop CIP (Cartridge In Pack) which resets the flip-flop NS (Normal Seek). The signal MC sets the flip-flop SM (Slow Motion) and the SPE (Select Positive Edge) becomes a '1'. Also, the flip-flop EC (Enable Count) is reset and the signal MAD (Maximum at DA converter) becomes a '0'. The flip-flop EP (End of Position) is reset by the signal SM which sets the signal SLOW to a "1".
The Head Selection register flip-flops H0 and H1 are reset by signal SM, which means that the upper head of the cartridge is selected.

7.2 START (Figure 3-20)

Two micro-switches ensure that the X1215 cannot be started when a cartridge is not present or when the cartridge loading sequence has been incorrectly implemented, and to check that the two clamps are closed.
They are connected in parallel to, effectively, form an OR gate. The logic checks that these switches are closed before permitting the X1215 to be started.
When one or two of these switches are open, the signal RTO (Ready To Operate) is not produced and the flip-flops Start and Unsafe cannot be set.
When the cartridge is correctly loaded, the micro-switches are closed and signal RTO is active to remove the block on the start circuit.
By operation of the Start/Stop button on the Operators' panel, the signal SBP (Start/Stop Button Pressed) becomes a '1'. The flip-flop START is set and the signal MC (Master Clear) is removed. The POC (Power On Clear) signal reset the flip-flop DPM (De-Energise Pack Motor) to start the pack motor. The signal TCZ0 is removed to allow the Timing Counter (TC) to function by the 50Hz signal. The Timing Counter is stepped by each clock pulse input. The counter starts with TC0 and steps through TC08 (2.5 sec.).
When the Timing Counter reaches stage 8 (TC08 is a '1'), the flip-flop CME (Cleaning Motor Energised) is set which will start the brush motor. The brushes go inside the pack and open a micro-switch which is connected on the brush arm. The signal BIRN (Cleaning Brush In Retracted Not Active) becomes a '0'. While the Timing Counter is being stepped to stage 11 (TC1011 is a '1'), the brushes move in and out of the pack in a cleaning action several times. Each cleaning action operates the micro-switch, effecting the signals BIRN and BIRA. When TC1011 is a '1' (after 30 sec.), it sets the D-type flip-flop EOCC (End of Cleaning Cycle). Some time later the signal BIRA (Brushes in Retracted position) becomes a '0'. The signals EOCC and BIR both being a '1' removes signal CME which stops the cleaning motor. When the signal TC1112 (after 60 sec.) becomes '0', the signal ESSC (End of Start/Stop Cycle) becomes a '1' and the D-type flip-flop PEXC (Preparation Exchange of Cartridge) is reset and signal PEXC sets the flip-flop FNE (First Seek Normal End) and the signal FSF (First Seek Forward) becomes a '1' which activates the positioning by inhibiting the signal RET.
The signal FSF sets the flip-flop DFF (Direction Forced Forwards).

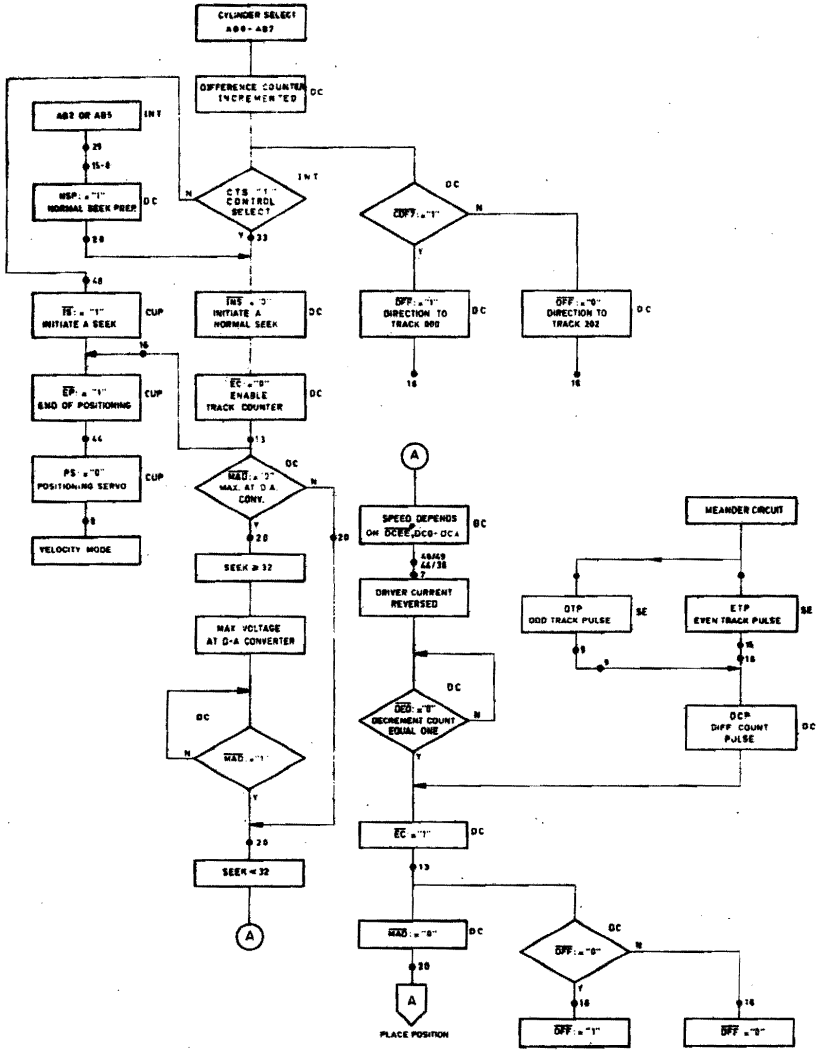

NORMAL SEEK

Figure 3-22

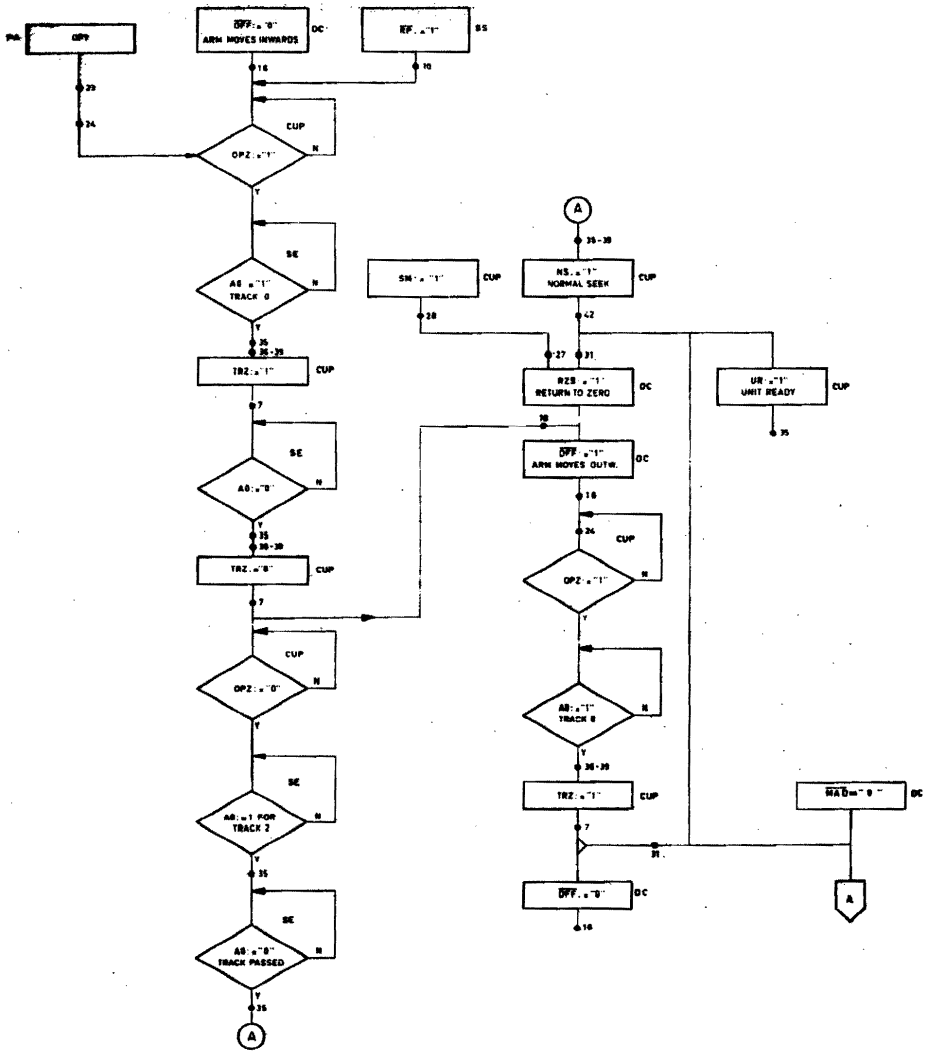

FIRST SEEK

Figure 3-21

7.3 FIRST SEEK (Figure 3-21)

At the end of the start procedure, the flip-flop DFF (Direction Forced Forward) is set and the positioner moves towards the discs. When the heads reach the vicinity of track zero, the signal OPZ (Optical Zero) becomes a '1'. When the heads are positioned over track zero, the signal AO (Area Around Even Track) becomes a '1' and the signal TRZ (Track Zero) is a '1'. The heads continue to move and the signal AO becomes a '0', making signal TRZ a '0'. The signal OPZ becomes a '0' because the heads have moved away from track zero. When the heads reach track 1½, the signal AO becomes a '1' and when track 2½ is passed, the signal becomes a '0'. With signals AO and OPZ both '0' th signal NS (Normal Seek) becomes a '1'. The signal SM (Slow Motion), which is still a '1' (see Power-on), and signal NS produce signal RZS (Return to Zero Seek) which resets the flip-flop DFF. The heads start moving in the opposite direction and the signal OPZ becomes a '1' again. Also, signal AO becomes a '1' when the heads reach track ½ and makes signal TRZ a '1'. Because the signal NS is still a '1' and the signal TCZ (Track Centre Zero) is a '1' and the flip-flop DFF is set again. The rest of the seek is discussed in the Position Mode description in this volume.

7.4 NORMAL SEEK (Figure 3-22)

The interface signals AB0 through AB7 fill a counter with the contents of the new address. This address with the old address which is present in a second counter. The output of an adder indicates the number of tracks that the positioner has to move. When the number is positive, the flip-flop DFF (Direction Forced Forward) is set and the heads will move inside the pack. When the number is negative, the flip-flop DFF is reset and the movement is in the opposite direction. The number of tracks required to be moved by the positioner is placed in a synchronous up/down counter. When the positioner starts moving, the counter receives a DCP (Decrement Pulse) pulse from the meander (see Meander sections) each time the positioner moves over a track. When the counter has received the same number of pulses as the contents of the counter, then the output of the counter, signal DE0 (Decrement Counter equal one) is produced. This indicates that the positioner is within half a track distance of the required track.
The movement of the positioner is initiated by the interface signal AB2, together with the signal CTS (Control Select Command). This signal AB2 makes signal NSP a '1' (Normal Seek Preparation). The leading edge of signal CTS produces signal IS (Initiate a Seek) to reset flip-flop EP (End of Position). The signal PS becomes a '0' (Positioning Servo) which indicates that the positioner is now in the Velocity mode. Also, during the CTS pulse, the signal INS (Initiate a Normal Seek) becomes a '1' and this will set the flip-flop EC (Enable Count). The signal $\overline{\text{MAD}}$ (Maximum at DA conterter) is either a '0' or a '1', depending on the output of the synchronous up/down counter. When the output of the counter is less than 32 (the positioner has to move less than 32 tracks), the signal $\overline{\text{MAD}}$ is a '1'. When the output of the counter is equal or greater than 32, the signal $\overline{\text{MAD}}$ is a '0'.
While $\overline{\text{MAD}}$ is "0" the positioner accelerates or moves at maximum speed. The moment that signal $\overline{\text{MAD}}$ becomes '1', the speed reduces and is dependent on the signals DC0 through DC4 (the 5 least significant bits of the outputs of the up/down counter), together with signal $\overline{\text{DCEE}}$. When the positioner has arrived at the selected track, the outputs of the counter make signal DE0 a '1' and, on the leading edge of the last DCP pulse, the flip-flop EC is reset. The signal EC either sets or resets the flip-flop DFF which depends on the state of the flip-flop DFF when triggered. The signal $\overline{\text{MAD}}$ becomes a '0'.
The rest of the seek is described in the Position Mode section in this volume.

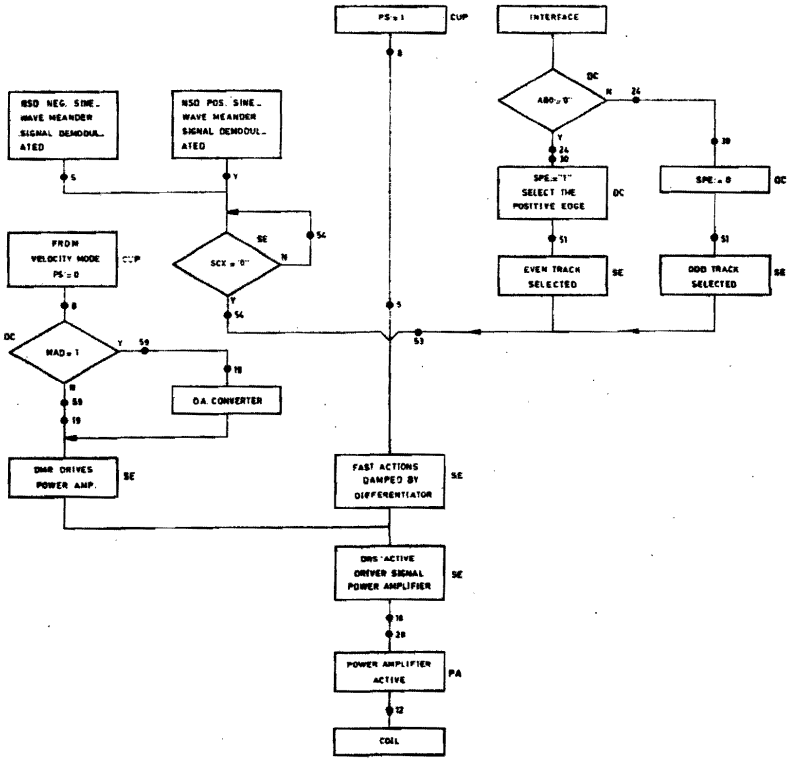

POSITIONING MODE

Figure 3-25

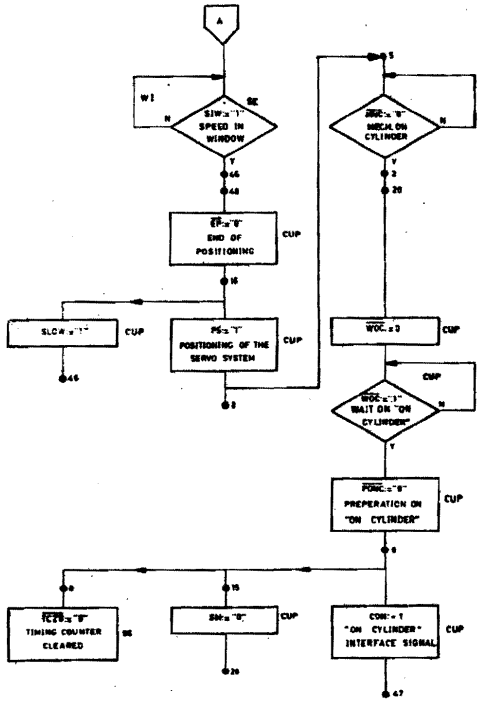

PLACE POSITIONING

Figure 3-24

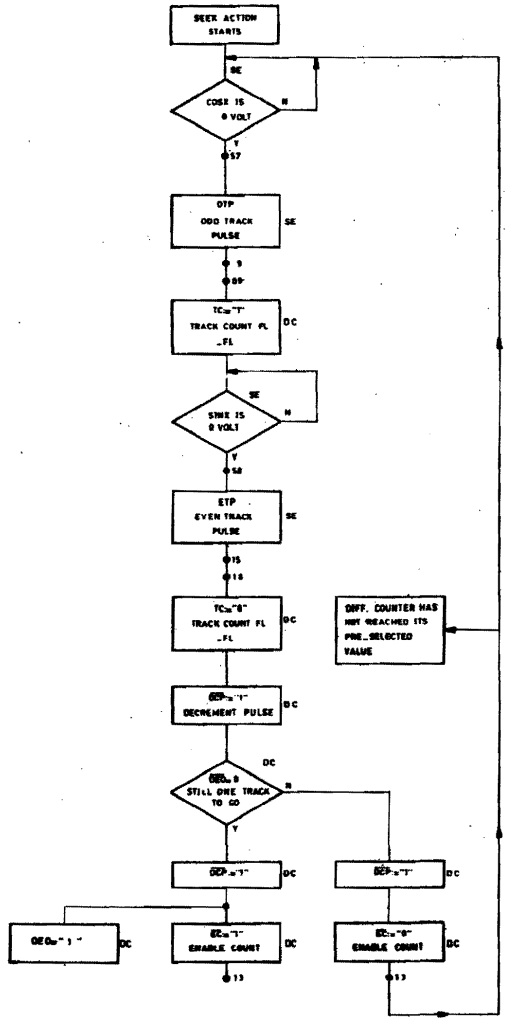

TRACK COUNT OPERATION

Figure 3-23

7.5 TRACK COUNT OPERATION (Figure 3-23)

When the positioner moves over the tracks the meander produces the signals, COSX SINX. OTP (Odd Track Pulse) and AO (Area around even track). Also the signals SINX ETP, (Even Track Pulse) and A12 are produced. The flip-flop TC produces a DCP (Decrement Pulse). These DCP pulses decrement the count in the up/down counter each time the pulse is raised.
Providing the positioner has not reached the selected track the up/down counter receives a DCP pulse for every track. Also, the output signal DEO (Difference counter Equals One) is a "0" and the flip-flop EC (Enable Count) stays set. The moment the positioner reaches the selected track the signal DEO becomes a "1" and, on the leading edge of the DCP pulse, flip-flop EC is reset. The flip-flop EP (End of Position) is set and the signal PS (Position Servo) becomes a "1".

7.6 PLACE POSITIONING (Figure 3-24)

Due to the signal $\overline{\text{MAD}}$ (Maximum At DA Converter) being active fpr a short duration, the speed of the arm will decrease and when the speed decreases sufficiently, it comes within a pre-selected value (window); a tachometer monitors the speed. The output of the tachometer WSIW (Window Speed In Window) produces signal SIW (Speed In Window). When the speed is at the pre-selected value, signal SIW becomes logical '1' and sets the flip-flop EP (End of Positioning). The signals SLOW and PS (Place Positioning Servo) becomes a '1' to change the control from Velocity Mode to Positioning Mode.
Another window signal MNC (Mechanical on Cylinder), together with signal EP are used to produce signal WOC.
The one-shot WOC (Wait on On Cylinder) is used to delay (because of mechanical transients) the control circuit which indicates that the head has arrived at the selected cylinder.
When the delay has expired, the signal PONC (Preparation On Cylinder) becomes a '1' and signal CON becomes a '1'. Also, signal TCZO (Reset Timing Counter) becomes a '0' and SM (Slow Motion) is reset.

POSITIONING MODE (Figure 3-25)

Depending on the least significant bit of the address bus lines (AB0) selection of an even or odd track is realised. Signal SPE (Selection of a Positive Edge) determines whether the positive-going or negative-going edge of the received sine-wave signal is used. If the signal SPE is a logical "!" no inversion of the sine-wave signal is needed.
The sum of position signal (SINX) and differentiated position signal is supplied to an electronic swtich circuit. One switch is open when signal PS (Positioning Servo System) is a logic "!" (Positioning Mode). If the switch is closed (PS = "0") the other is opened (Velocity Mode) and the signal DMR (Difference between Momentary and Required speed)controls the positioning of the heads. Both switches (selection of velocity mode or positioning mode) are connected together and the output provides the input to an operational amplifier.
The output of this amplifier is the signal DRS (Driver Signal) which activates the power amplifier to send a proportional current through the positioning coil.
For more detailed information about the differentiator, electronic switch and operational amplifier refer to Volume 5.

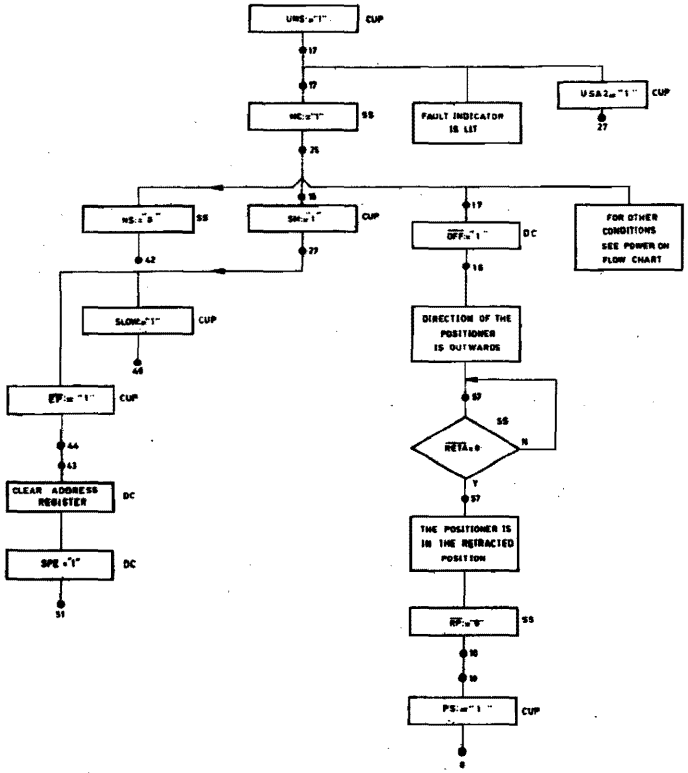

GO TO RETRACTED POSITION SEEK (UNSAFE 2)

Figure 3-27

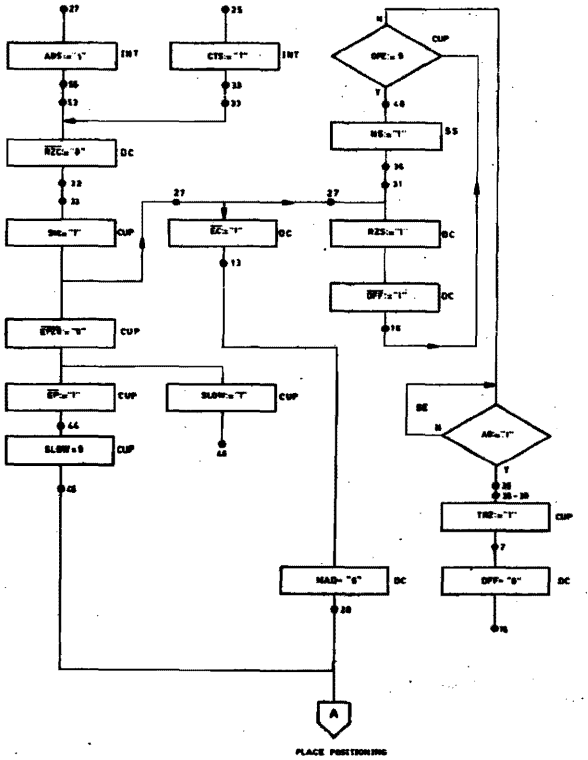

RETURN TO ZERO SEEK

Figure 3-26

7.7 RETURN TO ZERO SEEK (Figure 3-26)

Upon receipt of the interface signals CTS (Control Select) and AB6 (Return to Zero Seek) the signal RZC (Return to Zero Command) becomes a "0" to set the flip-flop SM (Slow Motion). The signal NS (Normal Seek) is a "1". The signal RZS (Return to Zero Seek) becomes a "1" due to the signals NS and SM. The signal RZS and signal SR (Slow Reverse to track zero), a result of the signal TRZ (Track Zero), reset the flip-flop DFF (direction of Force Forward) and the direction of movement of the positioner is reverse.
Also the signal MAD becomes a "1" when signal EC (Enable Count) becomes a "0". If, after some time, optical zero is detected and later signal A0 is produced; then the signal TRZ becomes a "1". The signal TRZ together with the signal RZS produces the signal DFFZ1 to set the flip-flop DFF. The signals NS and TRZ produce signal REPS (Reset End of Position flip-flop during a Slow Seek). The signals REPS and SM produce signal $\overline{\text{EPZO}}$ (End of Position Reset Signal) to reset flip-flop EP. Together signal $\overline{\text{EPZO}}$ and the reset output of flip-flop EP set signal SLOW to a logical "0". The rest of this seek is described in the Place Positioning Mode, see section 7.6 of this volume.

7.8 GO TO RETRACTED POSITION SEEK (Figure 3-27)

If 'unit unsafe 2' is made active, a fault condition is signalled (see Table 5.3.6 of this volume). The fault indicator on the Operator's panel is lit, and the master clear signal MC is produced with the following results:

a) The D-type flip-flop CIP (Carriage In Pack) is reset which resets the flip-flop NS (Normal Seek).

b) The output of the NAND-gate SM becomes a '1' with the result that signal EPZO is produced to reset flip-flop EP (End of Position). Signal EPZD, the inverted value of the reset output of flip-flop EP, clears the address register, resulting in emptying the Address register. This can be checked by measuring signal SPE (='1'), the inverted value of bit zero.

c) Another result of the master clear signal is that the flip-flop DFF is reset. The reset output moves the positioner outwards. When the arm has reached the retracted position, the micro-switch is operated and signal RETA is produced. The output of the retracted position flip-flop RET, in the first instance, produces signal RP (Retracted Position) which results in signal PS being produced. Signal RP also blocks the input to the power amplifier. The unit unsafe signal UNS, produces the interface signal USA2 (Unit Unsafe 2) and the interface signal AT (Attention).

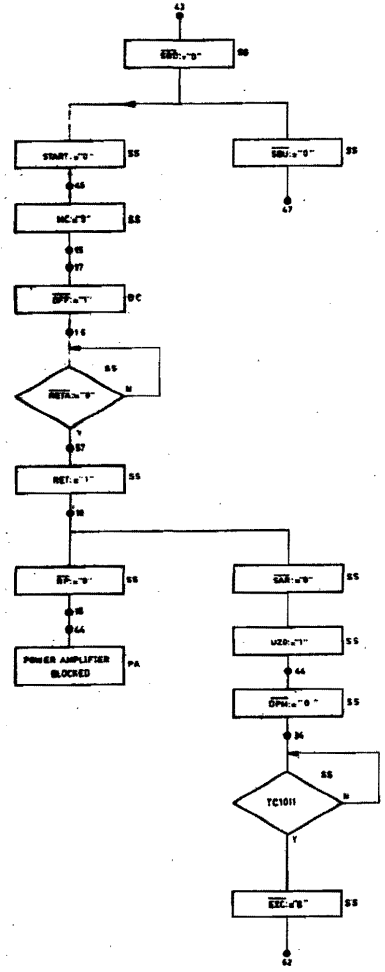

STOP

Figure 3-20

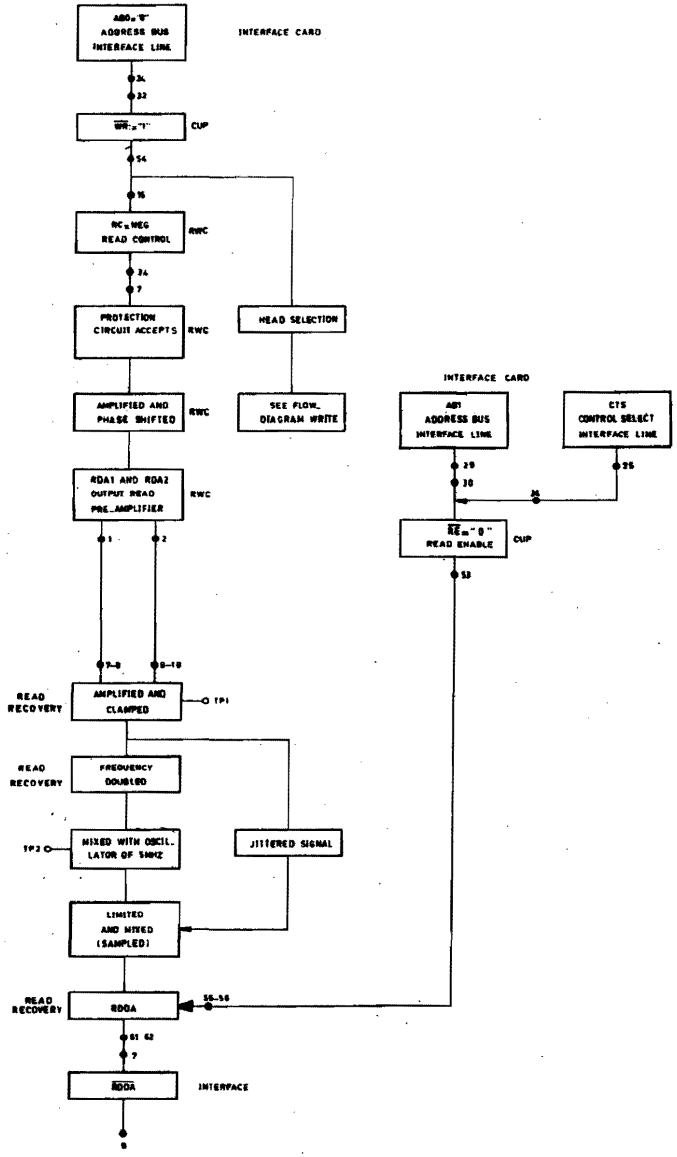

READ

Figure 3-29

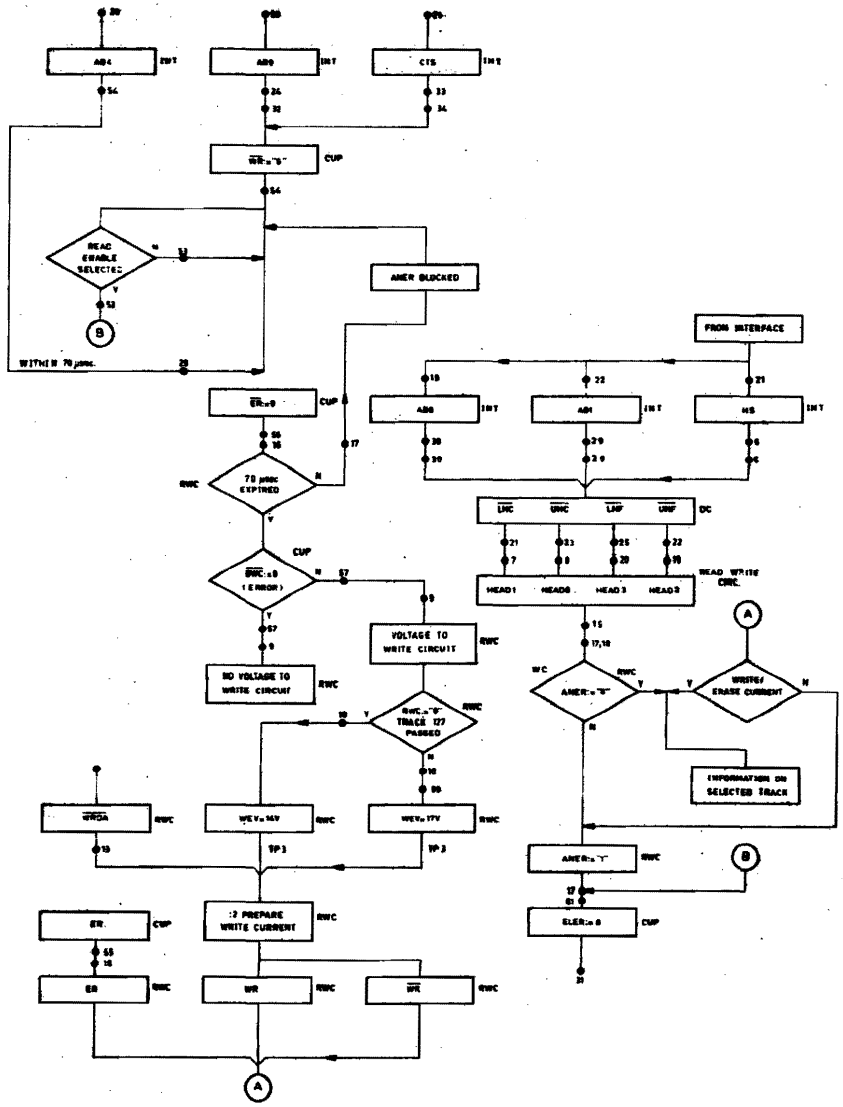

Figure 3-28

7.9 WRITING (Figure 3-28)

Before writing can be initiated, one of the heads must be selected (signals HS, AB0 and AB1, see figure 3-27).
The interface lines CTS (Control Select), AB0 (Write Enable) and AB4 (Erase Enable) are preparation signals for signals WR (Write Enable) and ER (Erase Enable). From the Control Unit the selection signals are received (erase enable signal must come within 70 µs after the write enable signal). During this time of 70 µs, signal ANER (Analogue Error) is blocked so that the unit does not react. The time lapse is necessary because of the time relationship between the write and erase gaps at full disc speed (erase head situated 'behind' the read/write head). If the read enable signal is present during the writing an electronic error is raised (signal ELER). If no fault is detected, signals UNS (Unit Unsafe) and RER (Recoverable Error) are not active, and signal BWC (Block Write Current) is not produced so that a voltage is supplied to the write circuit. The current through the read/write head is controlled because when the bit density of the track becomes greater, from cylinder 127 onwards to cylinder 203, the write current must reduce. This is done by the signal RWC (Reduce Write Current) reducing the supply voltage from 17 Volts to 14 Volts.
Operation of the write circuit is now possible and the data to be written on the track (serial information) is received. A 'divide by two' circuit produces edges from the bit cell pulses so that magnetisation changes are written on the track.
Two checks are incorporated. The first check determines the co-existance of the write and erase current (the erase and the write currents are 55 mA and 85 mA respectively from cylinder 000 to cylinder 128, and 43 mA and 67 mA respectively from cylinder 128 to the final cylinder). The other checks the selection of more than one head.
If more than one head is selected, signal ANER (Analogue Error) is selected.
If the checks are found to be correct (signal ANER is not raised so that signal stays logical '0'), the information is written to the track.

7.11 READING (Figure 3-29)

When reading, signals CTS (Control Select) together with AB1 (Read Enable) are required ($\overline{RE}$ = '0'). If signal AB0 (Write Enable) or AB4 (Erase Enable) is also present, a fault condition occurs. If the write enable signal WR is not present, the read circuit is allowed to be operative by activating the signal RC (Read Control). The protection circuit, using a diode-resistor network situated on the Read Pre-Amplifier card, will conduct.
Before reading is initiated, the head is selected by the signal HS (Head Select), together with the signals AB0 and AB1. The read signal from the head is amplified (200 X), phase-shifted, then amplified (100 X) again. The signal is then sent to the Read Recovery Card where it is amplified to such an extent that the peaks are flattened. Realising that mechanical actions are involved, a circuit is incorporated to stabilise the jittering pulses received from the head. An oscillator circuit of double the highest received frequency (2.5 MHz) is used the sample the incoming pulses in the following way.
The oscillator circuit consists of a frequency doubler, a one-shot and a resonant circuit tuned for a frequency of approximately 5 MHz. The one-shot, shaping the frequency doubled input pulse, initiates, via a transistor, the resonant circuit. Each time the one-shot produces a pulse, the resonant circuit is triggered. The output of the oscillator circuit is amplified and mixed with the input signal; this is called sampling. The sampled pulse has the frequency of the input signal and the stability of the oscillator circuit used.
A one-shot with a pulse-width of 100 ns, together with a frequency doubler are used to produce the required interface signal RDDA (Bit Cell configuration).

7.12 STOP (figure 3-30)

To stop the unit, the Start/Stop button must be pressed. This action results in the resetting of the Start flip-flop on the leading edge of signal SBP.
The signal MC (Master Clear) becoming a logical '1', resets the flip-flop DFF.
The positioner arm moves outwards, passing optical zero, until it reaches the retracted position.
The signal RET becomes a '1' by the micro-swtich and two actions now take place.
The first action results in signal SAR being produced to raise signal UZO. The pack motor flip-flop EPM will be reset if the 50 Hz pulse is present, resulting in DPM = '0'. The drive motor will then stop. If now TC1011 becomes a logical '1' the PEXC flip-flop (Preparation Exchange Cartridge) will be set, and now the cartridge can be exchanged.
The second action results in the retracted position signal RP being raised so that the Power Amplifier input is blocked keeping the arm in the retracted position.

8.1 POWER SUPPLY (figure 4-16)

The mains voltage, which is normally 220 VAC, single phase, is connected with a transformer in the disc drive unit via a mains filter, a switch and a fuse.
The switch and the fuse are situated on the rear of the disc unit, the transformer is situated below the base plate in the rear of the disc unit.
The drive motor for the spindle and the motor for the cleaning mechanism are connected to the primary side of the transformer.
The transformer has been designed in such a way that, when a different mains voltage is required, the disc unit can be easily adapted to this voltage, by changing one connection on the primary side of the transformer.
A temperature safety has been built into the transformer.
The secondary side of the transformer delivers six voltages.

a) One voltage is used to make a DC voltage of + 24 V.
b) One voltage is used to make a DC voltage of + 12 V.
c) One voltage is used to make a DC voltage of + 5 V.
d) One voltage is used to make a DC voltage of - 12 V.

The voltages mentioned in a till d are stabilized. The stabilisation is done on a power supply card which is attached to the rear of the disc drive unit. The necessary series transistors are mounted on heatsinks which are mounted on the rear of the unit.

e) One voltage is used to feed the stabilisation circuit of the + 5 Volts supply.
f) The last voltage delivers after rectifying and smoothing a + 35 Volts voltage. These voltages are not stabilized and are fed from a winding with a centre tap.

Finally, on the primary side of the transformer, there is a voltage which, after rectifying, is used to brake the drive motor for the spindle electrically.

8.2 POWER SUPPLY CARD (figure 4-15)

The power supply card carries the following circuits:

a) A +5 Volts supply (protected by a 4A. fuse)
b) A +24 Volts circuit (protected by a 1.2A fuse)
c) A +12 Volts circuit (protected by a 1A fuse)
d) A -12 Volts circuit (protected by a 1A fuse)

Each circuit is basically the same, comprising a voltage regulator, transistor controlled by an integrated circuit.
Fluctuations of the output voltage are sensed, amplified and then fed to the voltage regulator transistor.
If the output voltage becomes too low the value of the internal resistor of the regulator transistor decreases.
If the voltage increases the value of the internal resistor of the regulator transistor increases.
The voltage drop across the transistor alters accordingly, regulating the output voltage.
The +5 Volts supply employs a thyristor protection circuit. If the voltage becomes too high the output voltage is short circuited to earth.

X1215/16 (ABOVE SERIAL NUMBER 2000)

Cartridge Disk Drive Unit

Vol. IV: Diagrams

Data Systems

1.1 GENERAL

The key to logic refers to the logic circuits on the printed circuit boareds (figure 4-1). The voltage levels used in the CDD are +5V for a logic "1" and OV for a logic " 0".
Each printed circuit board has a 64 pin female connector on which pin 2 is used for +5V and pins 4, 14, 26, 40, 52 and 64 are used for logical earth. The logic used in the CDD is generally called TTL (Transistor - Transistor Logic) consisting of integrated circuits.
These integrated circuits are contained in "dual in line" packages with 14 pin or 16 pin connections (figure 4-1A). Discrete component circuits containing separate resistors, capacitors, transistors or diodes are also sometimes used.
Figure 4-1B shows the organisation of component location on the printed circuits boards.

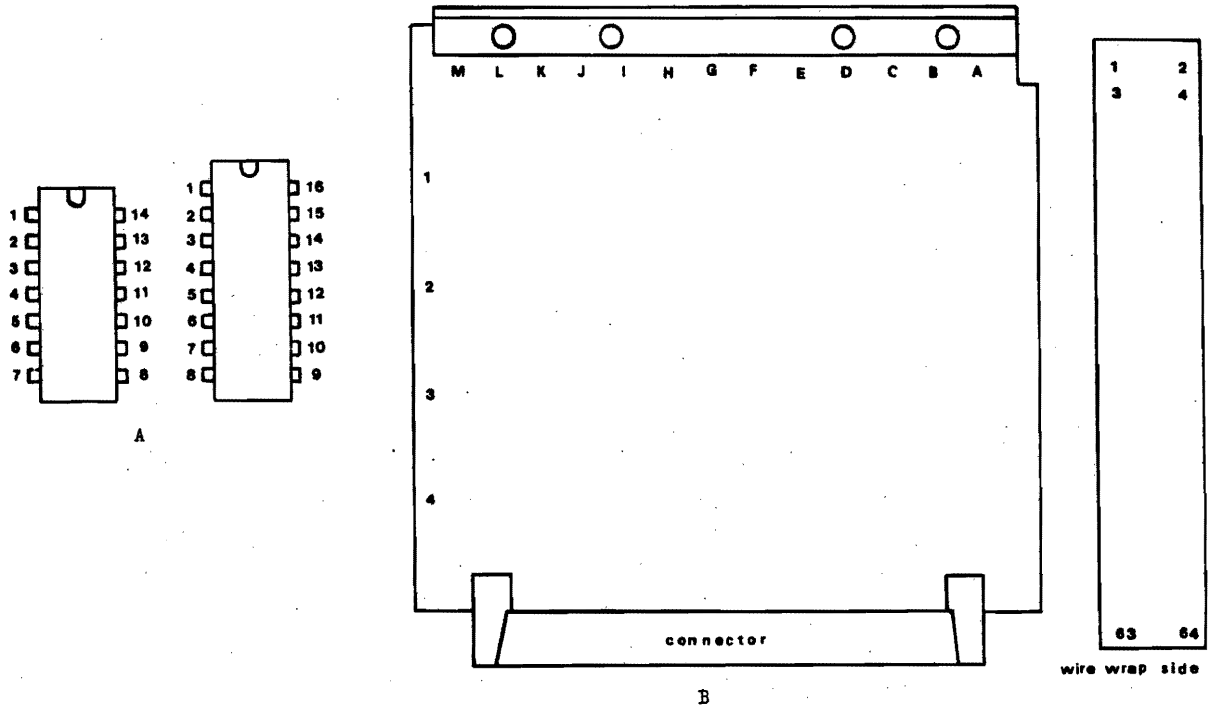

Figure 4-1

1.2 LOGIC SYMBOLS

A00 - SN 7400
A03 - SN 74132
A04 - SN 7410
A06 - SN 7420
A07 - SN 7413
A08 - SN 7430
A10 - SN 7403
A11 - SN 7438
A12 - SN 74400
A18 - SN 7408
A24 - SN 74401

AL400 - SN 7483
AL404 - SN 7482

AMP01 - µA 723
AMP02 - µA 741-TBA 221
AMP05 - µA 710
AMP06 - µA 711
AMP07 - µA 733

CNT00 - SN 74197
CNT01 - SN 74191

D00 - SN 7474
D01 - SN 7475

EOR00 - SN 7486
LAT01 - 74279
N00 - 7404

N01 - SN 7405
N02 - SN 7416
N03 - SN 7414

OS00 - SN 74123
OS01 - SN 74121

REC07 - SM 1414

OQ 651 N2
OQ 652 N2
OQ 653 N1

SN 75452

TBA 2218

µA 760

PAGES 4-3 THROUGH 4-14 T.B.F.

AO	AREA AROUND EVEN TRACK
A12	AREA BETWEEN ODD AND EVEN TRACK
ABO THR 7	ADDRESS AND CONTROL BUS BITS 0 THR 7
AM	ADDRESS MARKER
ANER	ANALOGUE ERROR
ANOF	ANALOGIC OFF-SET
AOP	AREA AROUND EVEN TRACK PULSE
AT	ATTENTION
BIR	BRUSH IN RETRACTED
BIRA	CLEANING BRUSH IN RETRACTED ACTIVE
BIRN	CLEANING BRUSH IN RETRACTED NOT ACTIVE
BPDA	BLOCKADE POSITIONER DRIFTS AWAY
BWC	BLOCKADE WITH CURRENT
CA	CLEANING CYCLE ALLOWED
CAO THR 7	CYLINDER ADDRESS REGISTER BITS 0 THR 7
CAE	CYLINDER ADDRESS REGISTER EXTENDED
CAS	CYLINDER ADDRESS SELECT
CCEXC	CONTROL COMMON EXCHANGE CARTRIDGE
CDF3	CARRY DIFFERENCE BIT 3
CDF7	CARRY DIFFERENCE BIT 7
CDFE	CARRY DIFFERENCE EXTENDED
CDS	CHECK DISK SPEED
CHE	
CFUD	
CID	CARRIAGE IN PACK
CL	CLAMP LOCK ENERGIZED
CME	CLEANING MOTOR ENERGIZED
CMEZ0	RESET CME
CMEZ1	SET CME
CON	ON CYLINDER
CONG	ON CYLINDER
COSX	COSINE X MEANDER SIGNAL
CP	CURRENT POSITIONER
CRE	CYLINDER REGISTER EXTENDED BIT
CROTHR7	CYLINDER REGISTER BIT 0 THR 7
CS	CYLINDER SELECT COMMAND
CTS	CONTROL SELECT COMMAND
CUAS	
DC0 THR 7	DECREMENT COUNTER BITS 0 THR 7
DCOD THR 70	DECREMENT COUNTER BIT 0 DECREMENTED DECREMENT COUNTER BIT 7 DECREMENTED
DCE	DECREMENT COUNTER EXTENDED BIT
DCEE	DECREMENT COUNTER EXTENDED BIT TO ELECTRONIC PART
DCP	DECREMENT COUNTER PREPARATION
DE	DECELERATE
DEB	DE-ENERGIZE EMERGENCY BRAKE
DEO	DECREMENT COUNTER EQUAL ONE
DETON	DETECT TRACK ONE NEGATIVE
DETZO	EXT DETECT TRACK ONE NEGATIVE FLIP-FLOP
DEZ	DECREMENT COUNTER EQUAL ZERO
DEZO	RESET DECREMENT COUNTER
DF0 THR 7	DIFFERENCE BITS 0 THR 7
DFF	DIRECTION IS FORCED FORWARD
DFFZD	DIRECTION IS FORCED FORWARD
DFFZO	RESET DFF
DFFZ1	SET DFF
DID	DATA IN DANGER
DIPC	DETECT INDEX PULSE CARTRIDGE R
DIPF	DETECT INDEX PULSE FIXED DISK
DMR	DIFFERENCE BETWEEN MOMENTARY AND REQUIRED SPEED
DNC	DRIVE NEGATIVE CURRENT
DOF	DECREMENT ONE STEP FORCED
DPC	DRIVE POSITIVE CURRENT
DPM	DE-ENERGIZE PACK MOTOR
DRS	DRIVER SIGNAL
EC	ENABLE COUNT
EDC	ENABLE DATA TO DECREMENT COUNTER
EEE	EVEN END POSITION TO ELECTRONIC PART
EIP	ENABLE INDEX PULSE
ELER"	ELECTRONIC ERROR (READ/WRITE)
EMB	EMERGENCY BRAKE
EOCC	END OF CLEANING CYCLE
EP	END OF POSITIONING
EPM	ENERGISE PACK MOTOR
EPZ0	RESET EP
EPZ1	SET EP
EPZD	END OF POSITIONING
ER	ERASE ENABLE
ERC	ERASE CURRENT
ERE	ERASE ENABLE COMMAND
ESC	END OF STOP CYCLE
ESSC	END OF START/STOP CYCLE
ETP	EVEN TRACK PULSE
EWEC	ERASE AND/OR WRITE COMMAND
EXC	EXCHANGE CARTRIDGE
FNE	FIRST SEEK NORMAL END
FNEZ0	RESET FNE
FENZ1	SET FNE
FSF	FIRST SEEK
H0	HEAD REGISTER BIT 0
H1	HEAD REGISTER BIT 1
HS	HEAD SELECT
IC1	INDEX CARTRIDGE 1
IC2	INDEX CARTRIDGE 2
IF1	INDEX FIXED DISK 1
IF2	INDEX FIXED DISK 2
IFX	INDEX FIXED DISK
INS	INITIATE NORMAL SEEK
IO	INTEGRATOR OUT
IPC	INDEX PULSE CARTRIDGE
IPCP	INDEX PULSE CARTRIDGE PREPARATION
IPF	INDEX PULSE FIXED DISK
IPFP	INDEX PULSE FIXED DISK PREPARATION
IRDC	INTERNAL READ CLOCK
IS	INITIATE A SEEK
ISPC	INDEX SECTOR PULSE CARTRIDGE
ISPF	INDEX SECTOR PULSE FIXED DISK
IW	INITIAL WAIT
IWZ1	SET IW
LED	
LHC	LOWER HEAD CARTRIDGE
LHF	LOWER HEAD FIXED DISK
MAD	MAXIMUM AT DA-CONVERTER
MC	MASTER CLEAR
MNC	MECHANICAL ON CYLINDER
MOD	MECHANICAL ON CYLINDER DETECT
NCD	NEGATIVE COSINE X MEANDER SIGNAL DEMODULATED
NOF	NEGATIVE OFF-SET
NS	NORMAL SEEK
NSD	NEGATIVE SINE X MEANDER SIGNAL DEMODULATED
NSP	NORMAL SEEK COMMAND PREPARATION
NSTD	NEGATIVE SPEED TRANSDUCER
POF	POSITIVE OFF-SET
OFF	OFF-SET SIGNAL
OPZ	OPTICAL ZERO
OPZRW	OPTICAL ZERO
OTP	ODD TRACK PULSE
OWE	ONLY WRITE
PAT	PREPARATION ATTENTION
PATT	PREPATION ATTENTION TRIGGER
PATZO	RESET PAT
PATZ1	SET PAT
PCD	POSITIVE COS X MEANDER DEMODULATED
PDA	POSITION DRIFTS AWAY OR NO MEANDER SIGNAL
PEEN	PREPARATION EVEN END POSITION NEXT
PEXC	PREPARATION EXCHANGE OF CARTRIDGE
PLSL	PLURAL SELECTION
PMD	PACK MOTOR DE-ENERGISED
PME	PAK MOTOR ENERGISE

PMZ1	SET PME
POC	POWER ON/OFF CLEAR
POCT	POWER ON/OFF CLEAR TEST
PODC	PREPARATION ON CYLI DER
PONO	POSITIONER OVER TRACK ONE NEGATIVE
PS	POSITIONING SERVO
PSD	POSITIVE SIME X MEANDER SIGNAL DEMODULATED
PSTD	POSITIVE SPEED TRANSDUCER
RC	READ CONTROL
RD1,2	READ DATA FROM PRE-AMPLIFIER
RDDA	READ DATA
RDE	READ DATA ENABLE
RE	READ ENABLE COMMAND
REDET	RESET DETECT RRACK ONE NEGATIVE FLIP-FLOP
REPS	RESET END OF POSITION SIGNAL
RER	RECOVERABLE ERROR
RERZ0	RESET RER
RERZ1	SET RER
RETN	RETRACTED SWITH NOT ACTIVE
REW	READ AND ERASE OR WRITE ENABLE
RP	RETRACTED POSITION
RT0	READY TO OPERATE
RUS	RESET UNSAFE
RWC	REDUCE WRITE CURRENT
RZ	RETURN TO ZERO
RZC	RETURN TO ZERO COMMAND
RZS	RETURN TO ZERO SEEK
S	START FLIP-FLOP
SAL	START ALLOWED
SAR	STOPPED AND IN RETRACTED
SBD	START/STOP BUTTON DOWN
SBP	START/STOP BUTTON PRESSED
SBU	START/STOP BUTTON UP
SCX"	SINE X AND COSINE X
SD	PACK SPEED DROPS DURING NORMAL SEEK
SDEB	SPEED DROPS OR EMERGENCY BROKE
SEMB	SET EMB
SINX	SINE X
SIW	SPEED IN WINDOW
SLOW	SLOW
SM	SLOW MOTION FLIP-FLOP
SMZ1	SET SLOW MOTION FLIP-FLOP
SMZD	SLOW MOTION
SMZH	SLOW MOTION
SPC	SECTOR PULSE CARTRIDGE
SPCP	SECTOR PULSE CARTRIDGE PREPARATION
SPF	SECTOR PULSE FIXED DISK
SPFP	SECTOR PULSE FIXED DISK PREPARATION
SR	SLOW REVERSE
START	START
STL	SEEK CONTINUES TOO LONG
SUS	SET UNSAFE
SZ0	RESET START FLIP-FLOP
TC	TRACK COUNT FLIP-FLOP
TC01-12	TIME COUNTER BIT 01 TILL BIT 12
TC08	TIME COUNTER BIT 08
TC1O1	TIME COUNTER BITS 10 AND 11
TC1112	TIME COUNTER BITS 11 AND 12
TCZ	TRACK CENTRE ZERO
TCZO	RESET TIME COUNTER
TDFFB	TEST POINT SIGNAL DFF
TDMR	TEST POINT SIGNAL DMR
TDRS	TEST DRIVER SIGNAL DRS
TPS	TEST POSITIONING SERVO
TPWEV	TEST WRITE ERASE VOLTAGE
TRZ	TRACK ZERO
TRSM	TEST RESISTOR DIODE MATRIX
TWSIW	TEST WINDOW SPEED IN WINDOW
UHC	UPPER HEAD CARTRIDGE
UHF	UPPER HEAD FIXED DISK
UNS	UNSAFE
UNSZ1	SET UNS
UR	UNIT READY
URI	UNIT READY INDICATOR
USA1	UNSAFE 1
USA2	UNSAFE 2
USA3	UNSAFE 3
USAF	UNSAFE FLIP-FLOP
USAZ1	SET USA
USL	UNIT SELECT
UZ0	RESET UNSAFE
VPC	VOLTAGE PROPORTIONAL TO CURRENT THROUGH POSITIONER COIL
WDRW	WRITE DATA RETURN WIRE
WOC	WAIT FOR ON CYLINDER MULTIVIBRATOR
WPI	WRITE PROTECT INDICATOR
WR	WRITE ENABLE
WRDA	WRITE DATA
WRC1	WRITE CURRENT 1
WRC2	WRITE CURRENT 2
WRE	WRITE ENABLE COMMAND
WSIW	TO WINDOW SPEED IN WINDOW
WTC	WITHIN TRACK CENTRE

The diagrams in this section are arranged in the following way:

Fig.	Abbr.	Card	Name	Card location	
4-2	CUP	3L58	Control-Unsafe-Position	6	
4-3	DBC	2M41	Dust-Bin Card	9	
4-4	DC	2L99	Decrement-Counter	5	
4-5	FI	3L54	Fault-Indicator	7	
4-6	IC	2L00	Interface Card	8	
4-7	IC	3L00	Interface Card	8	
4-8	LAT	2M24	Limitter Amplifier Temp.	11	(X1216)
4-9	Meander		Meander Card		
4-10	PA	1A28	Power Amplifier	1	
4-11	RR	2M63	Read-Recovery	10	
4-12	RW	5M03	Read-Write		(X1215)
4-13	RW	6M03	Read-Write		(X1216)
4-14	SE	2M26	Servo-Electronic	3	
4-15	SS	3L57	Start-Stop	2	
4-16	P.C.		Power Card		
4-17	S.C.A.	2L28	Service Card A		
4-18	S.C.B.	2L29	Service Card B		
4-19	D.P.	1M87	Driver Print		

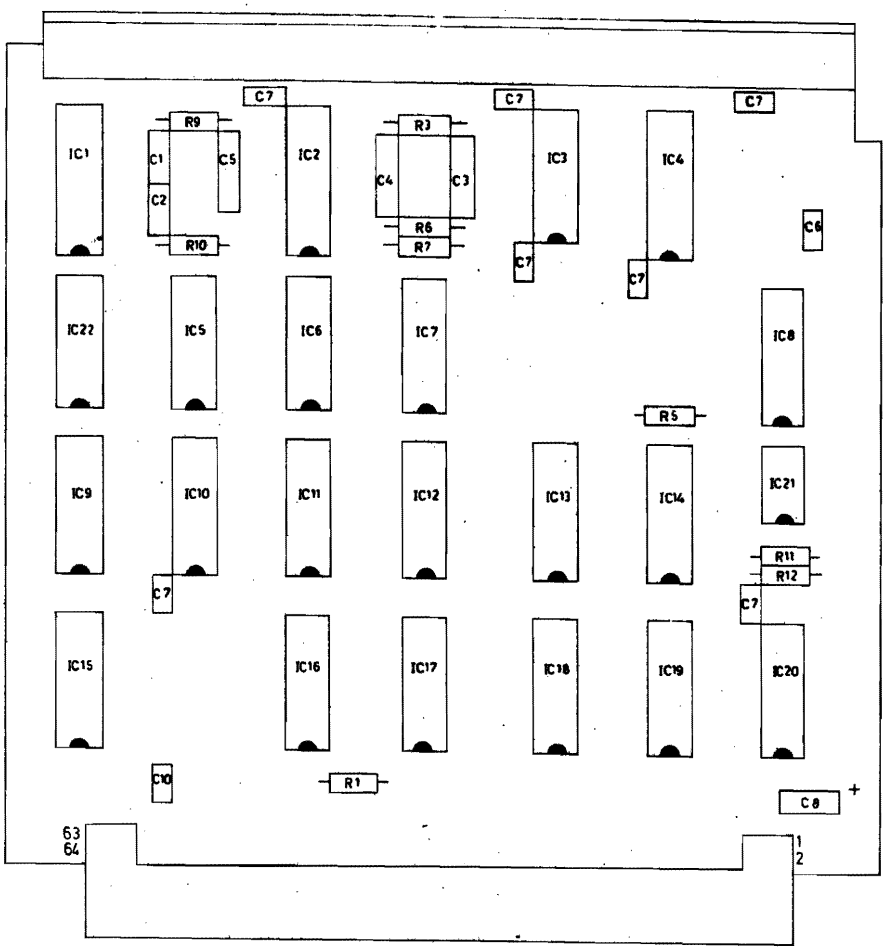

Figure 4-2A CARD CUP 3L58
COMPONENT SURVEY

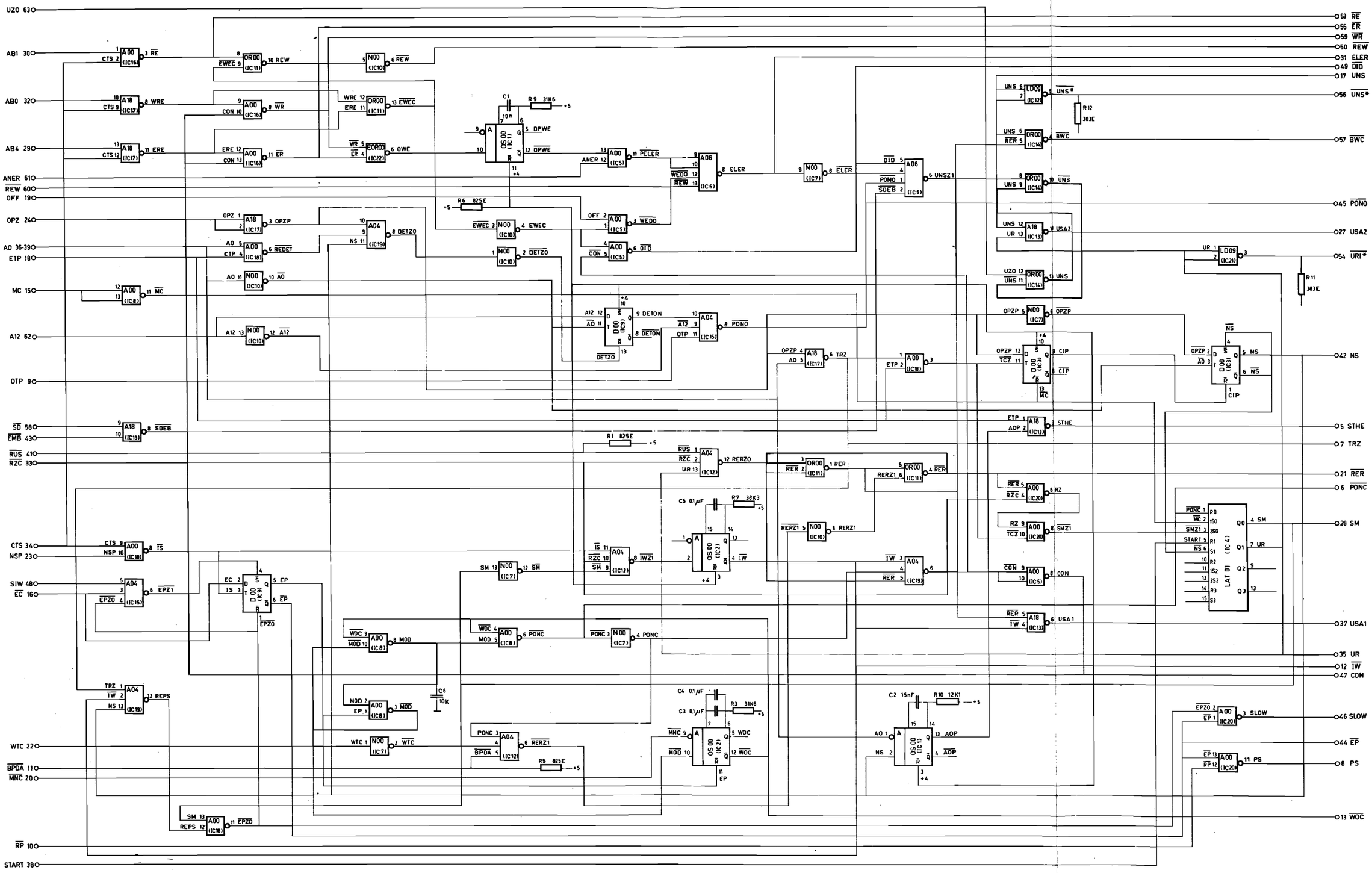

Figure 4-2 CARD CUP 3L58

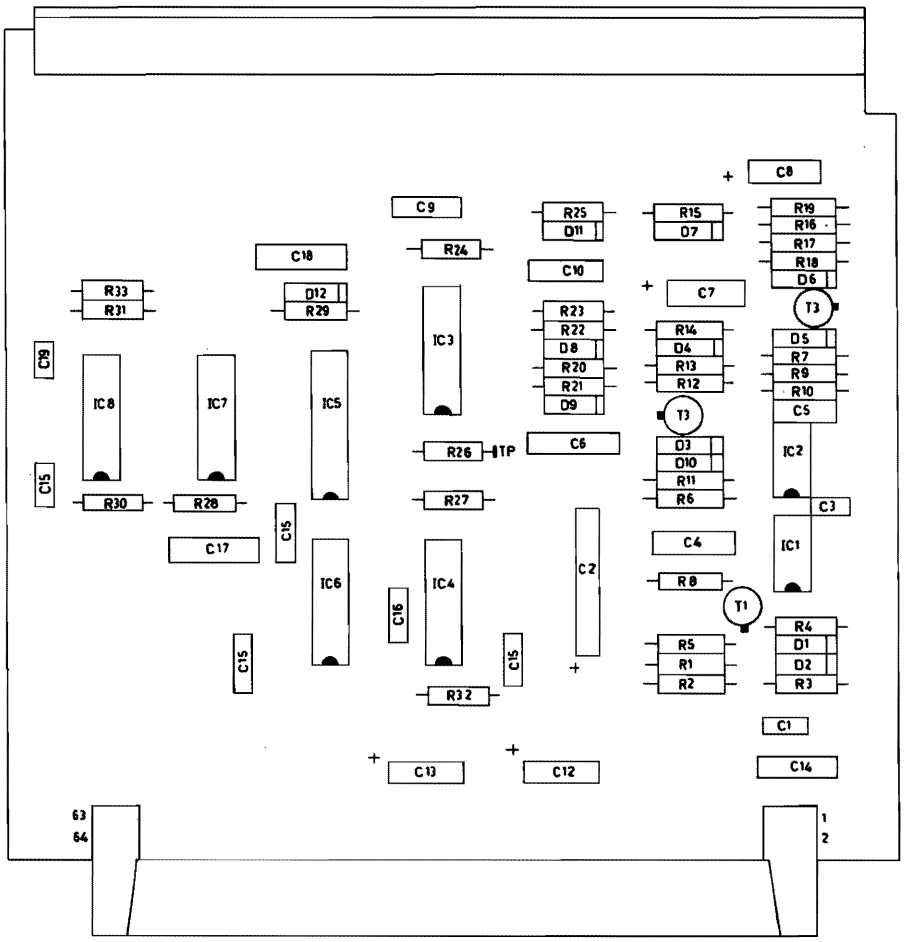

Figure 4-3A CARD DBC 2M41
COMPONENT SURVEY

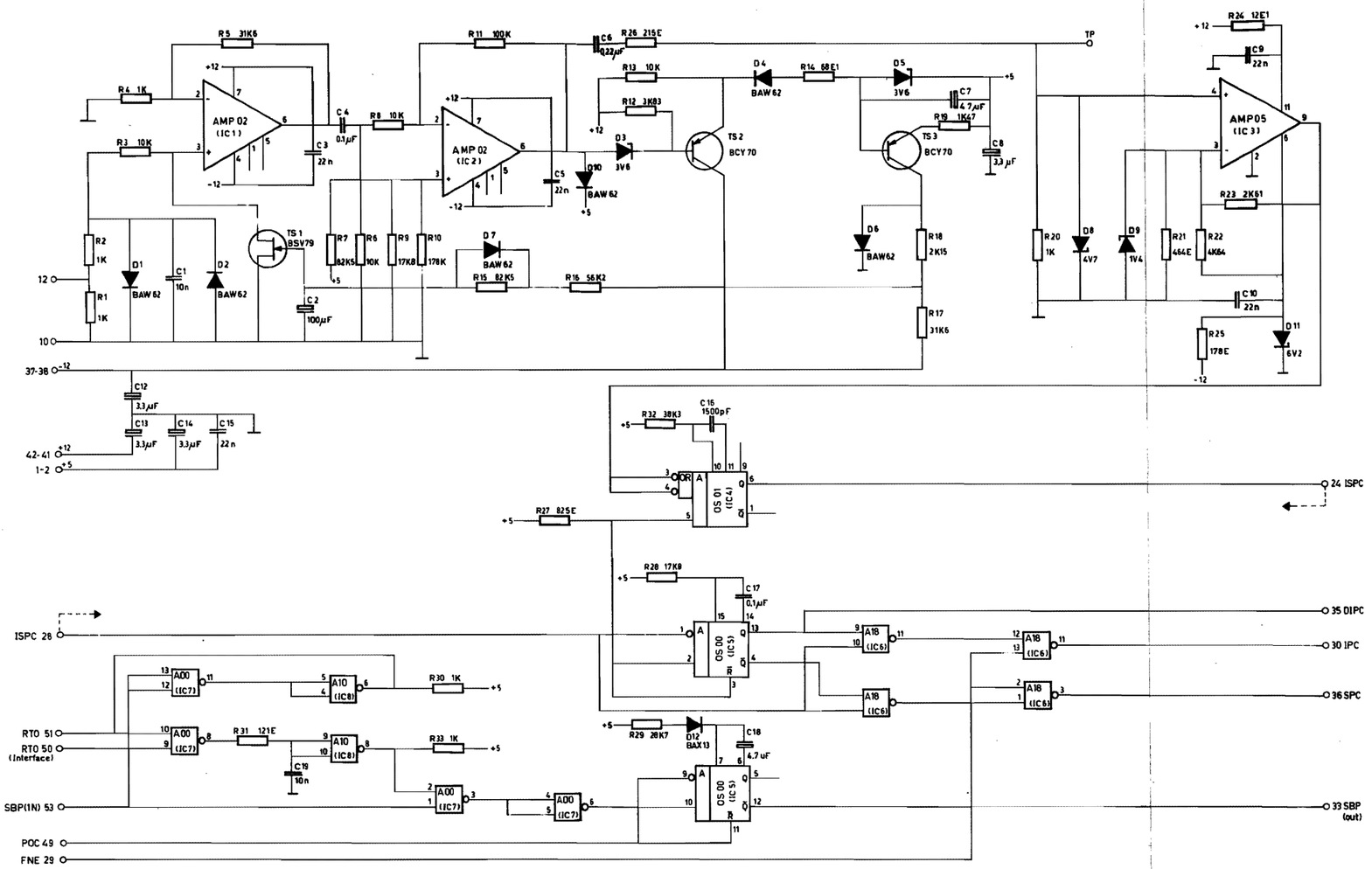

Figure 4-3 CARD DBC 2M41

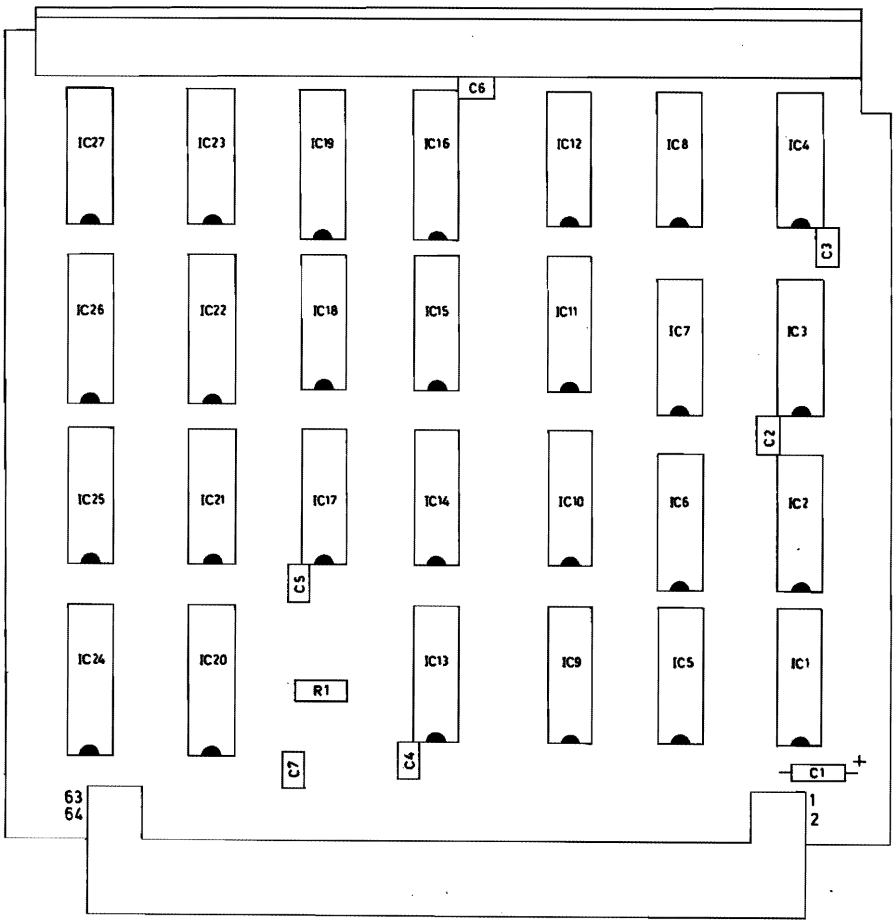

Figure 4-4A CARD D.C. 2L99
COMPONENT SURVEY

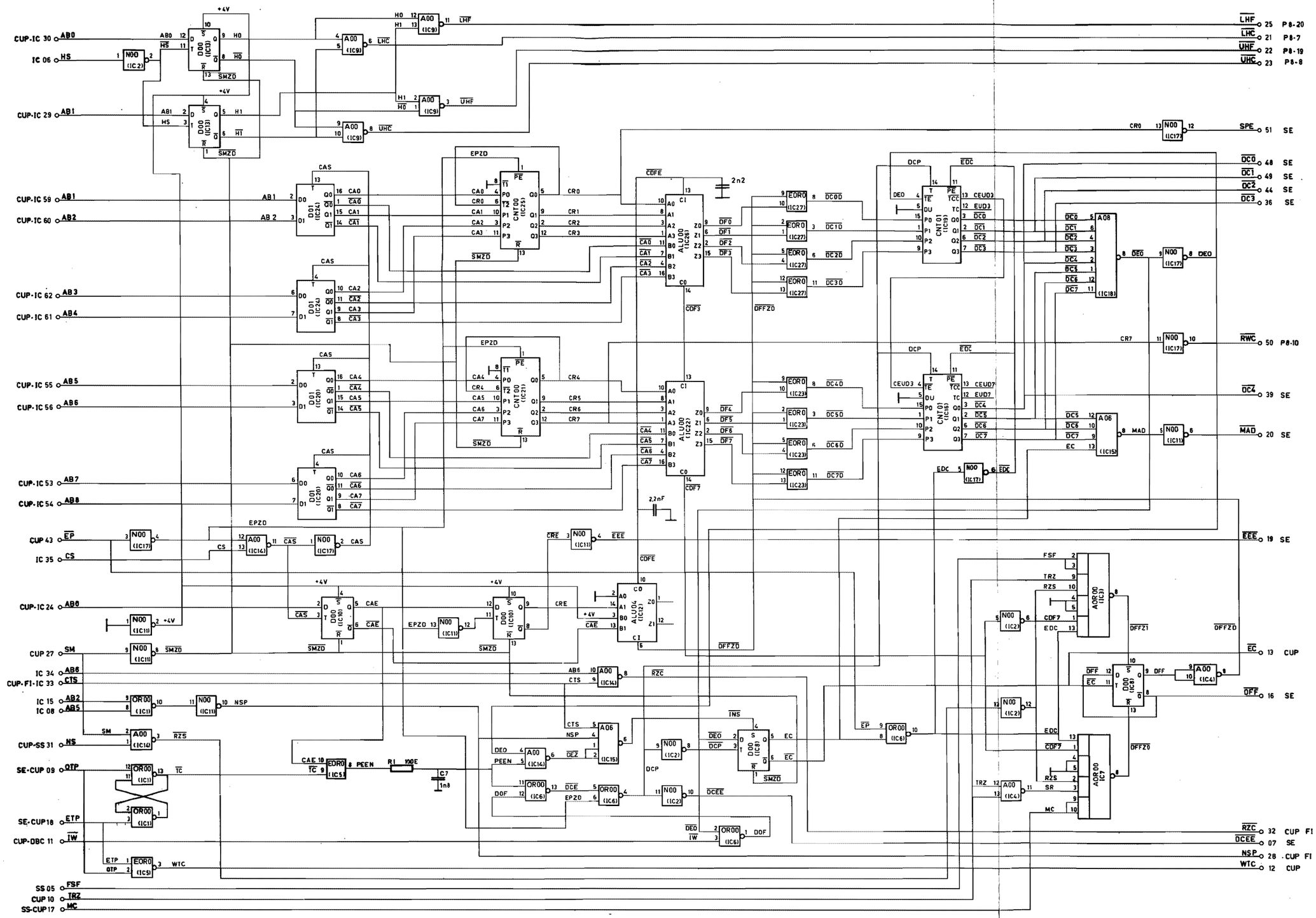

Figure 4-4 CARD D.C. 2L99

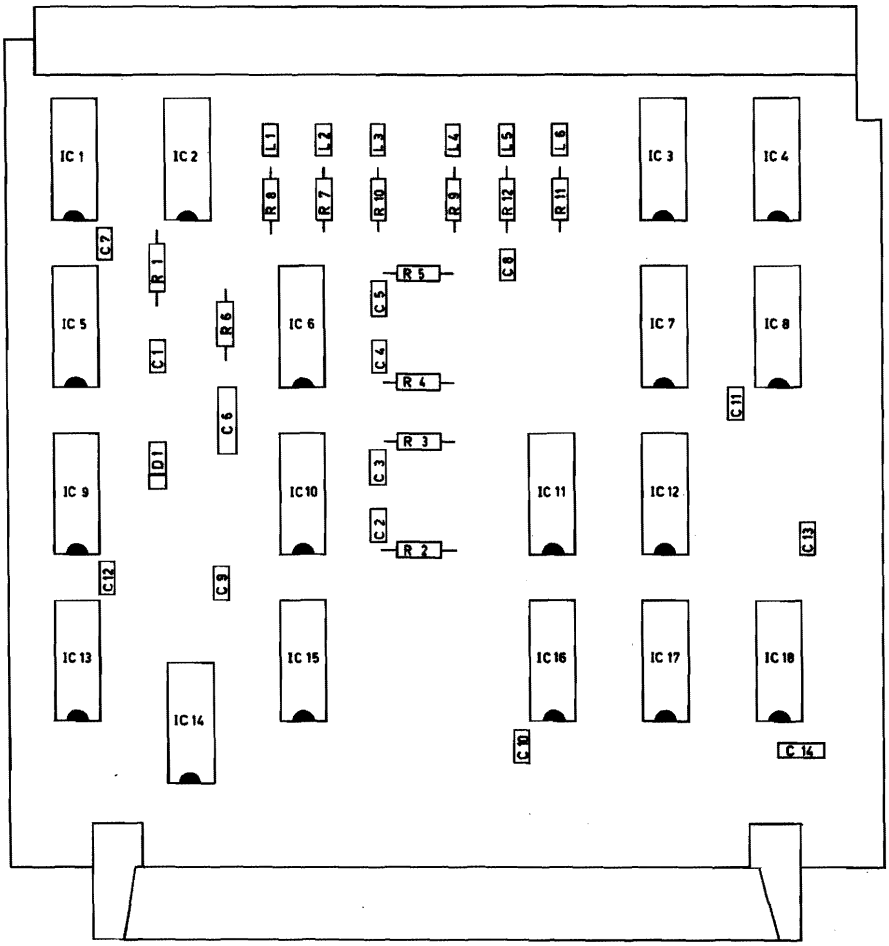

Figure 4-5A CARD FI 3L54
COMPONENT SURVEY

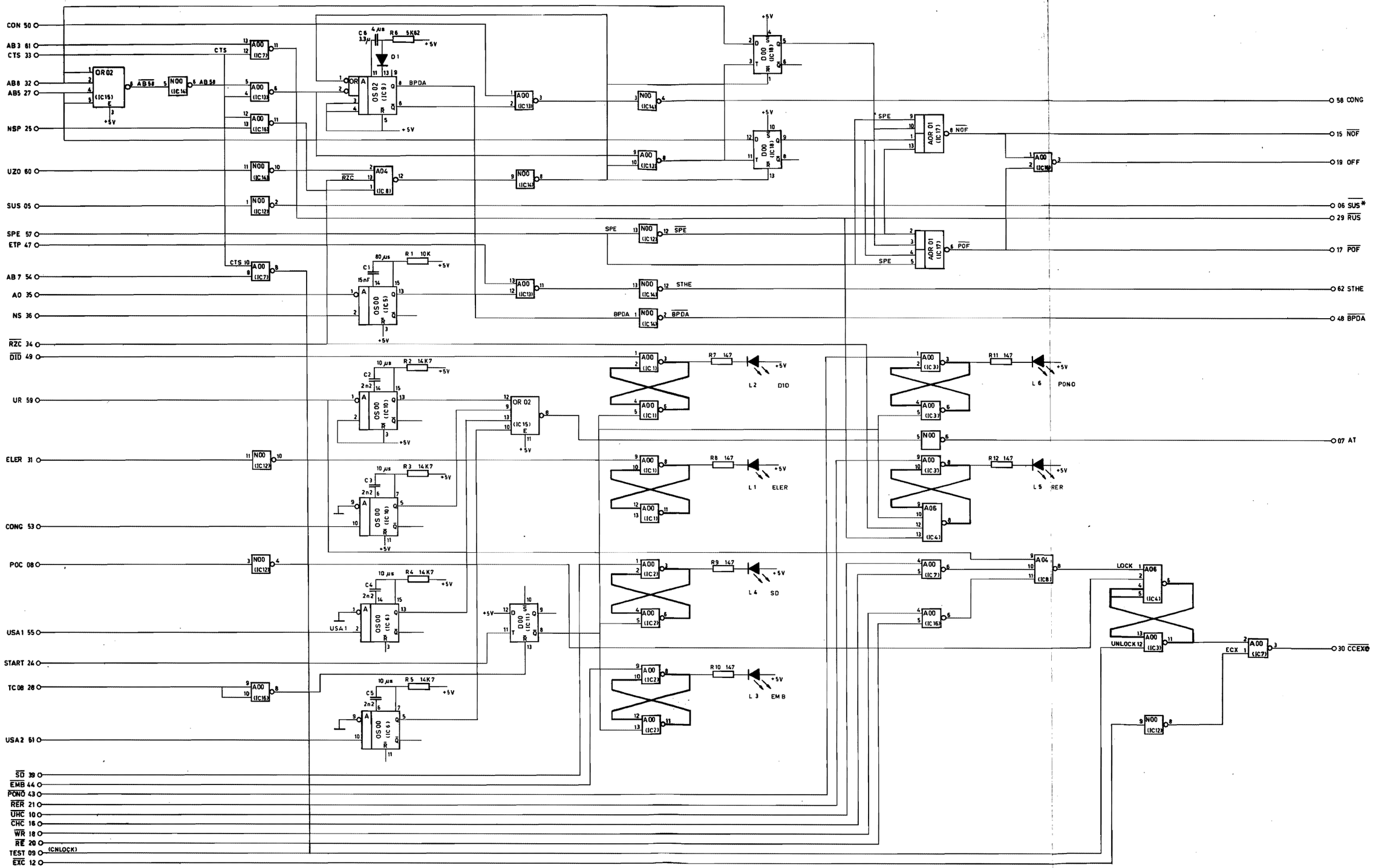

Figure 4-5 CARD FI 3L54

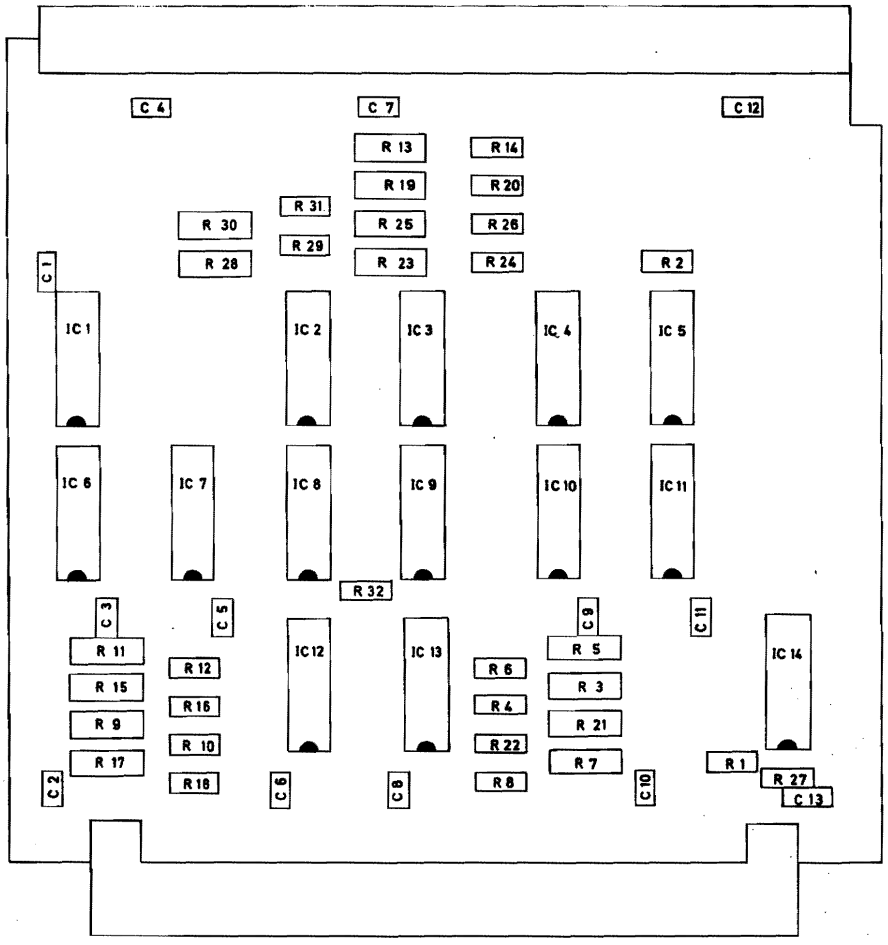

Figure 4-6A CARD IC 2L00
COMPONENT SURVEY

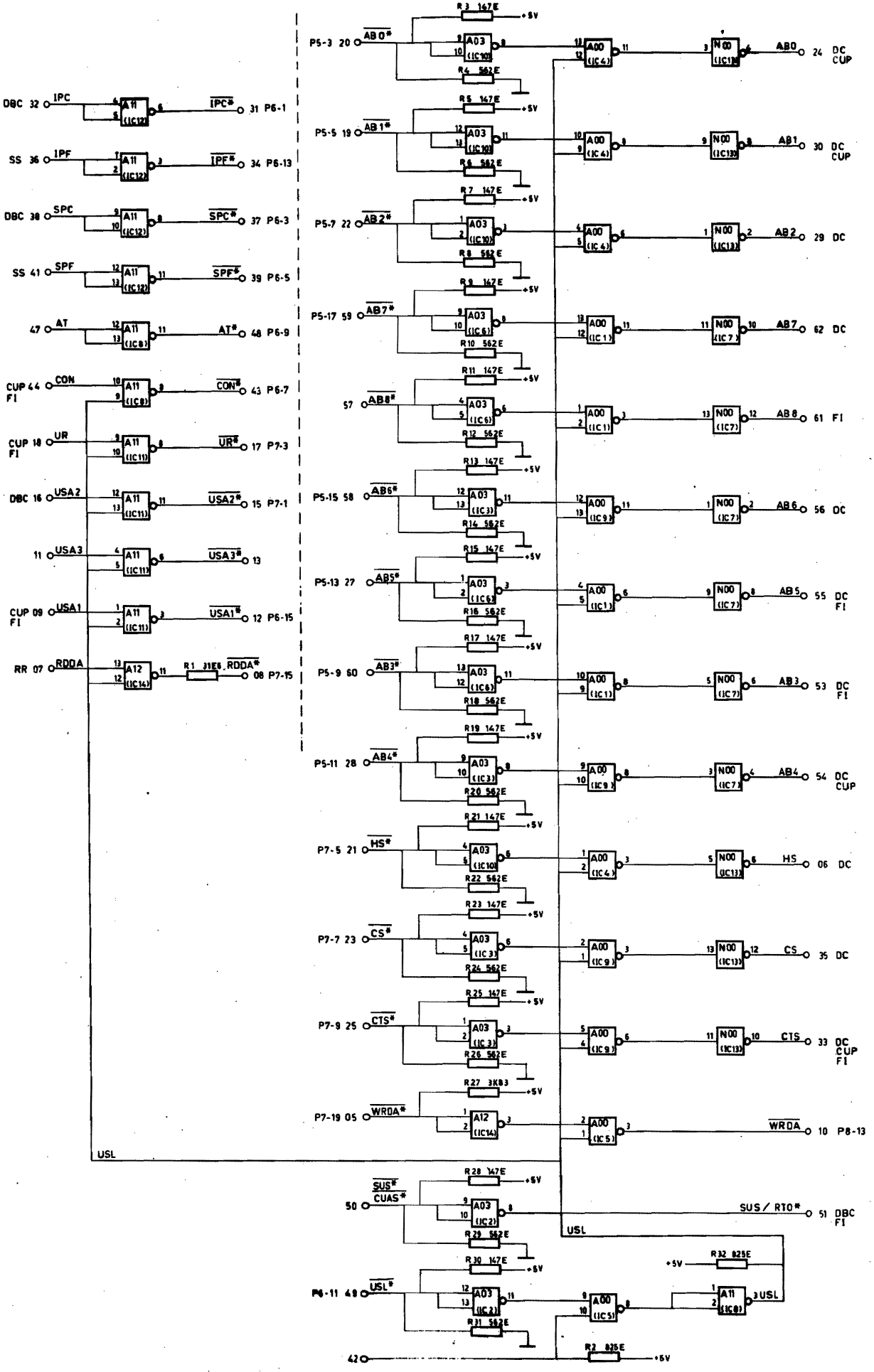

Figure 4-6 CARD IC 2L00

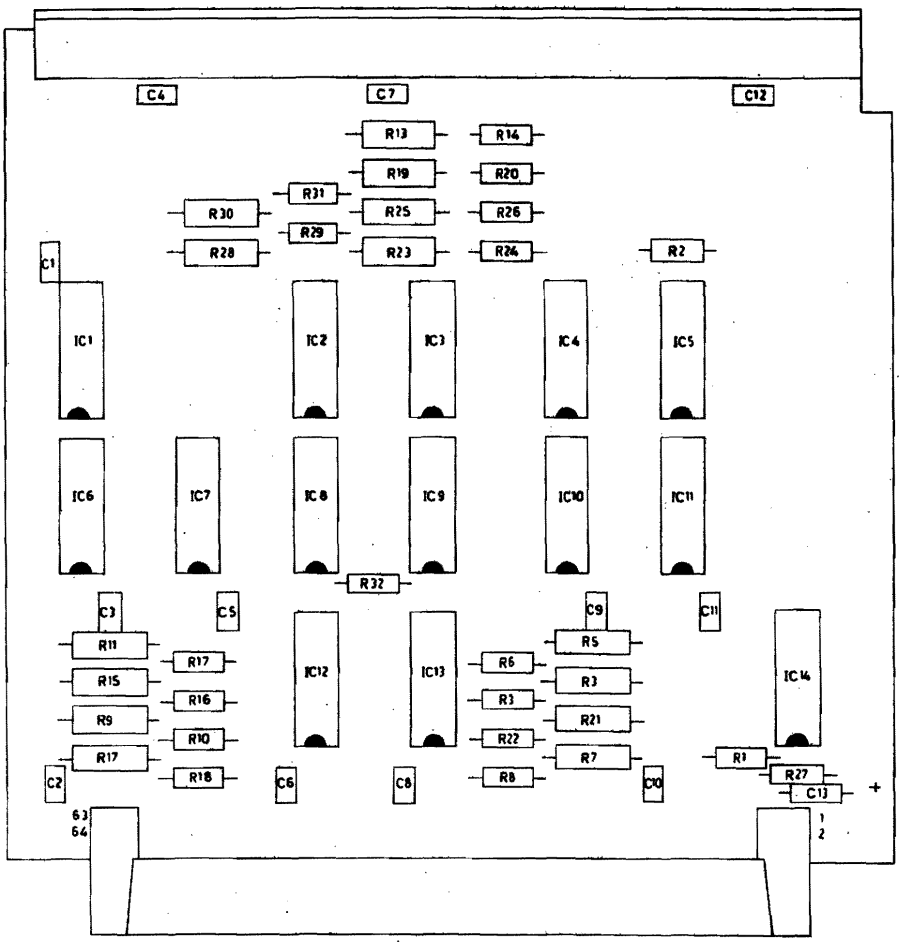

Figure 4-7A CARD IC 3L00
COMPONENT SURVEY

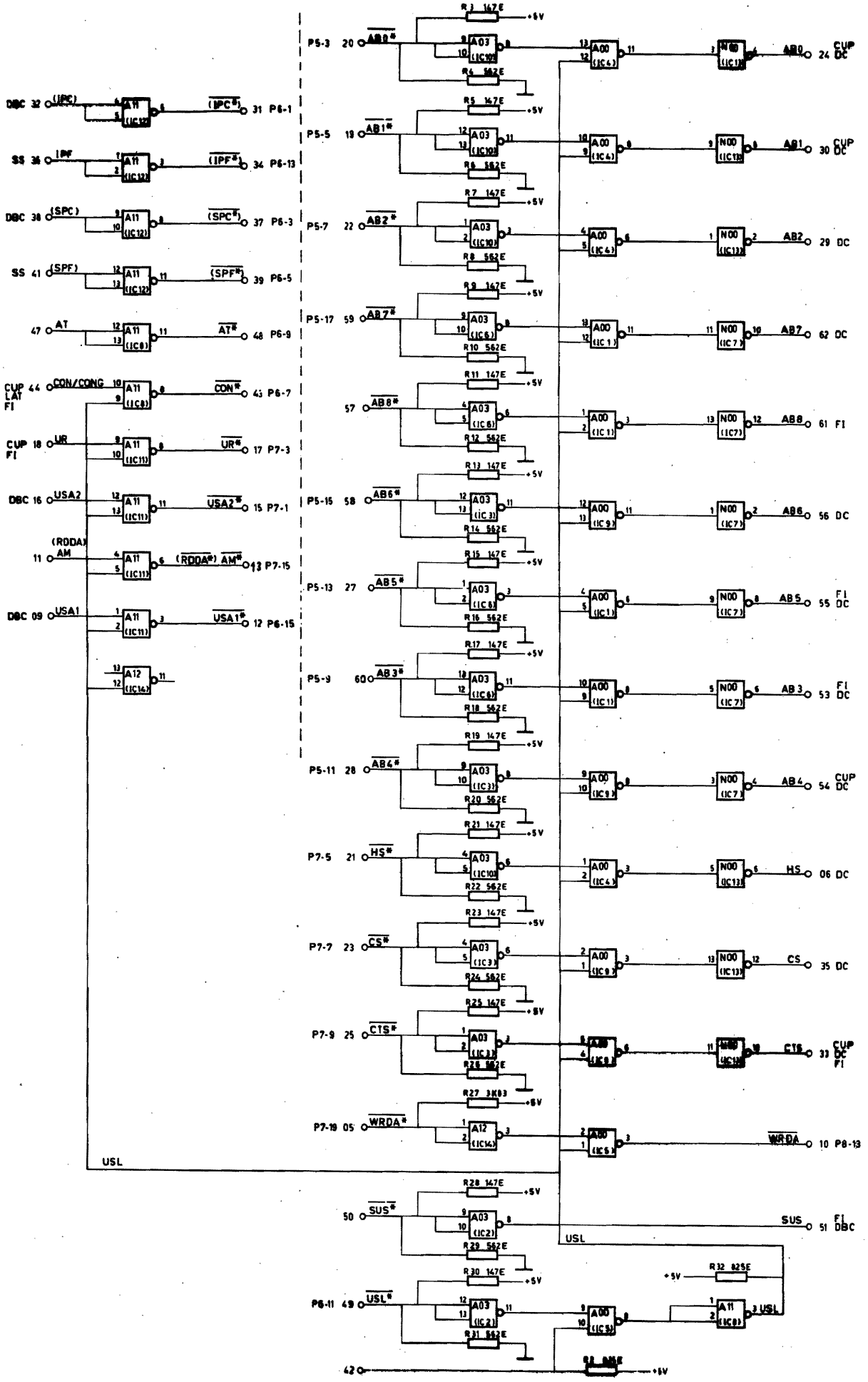

Figure 4-7 CARD IC 3L00

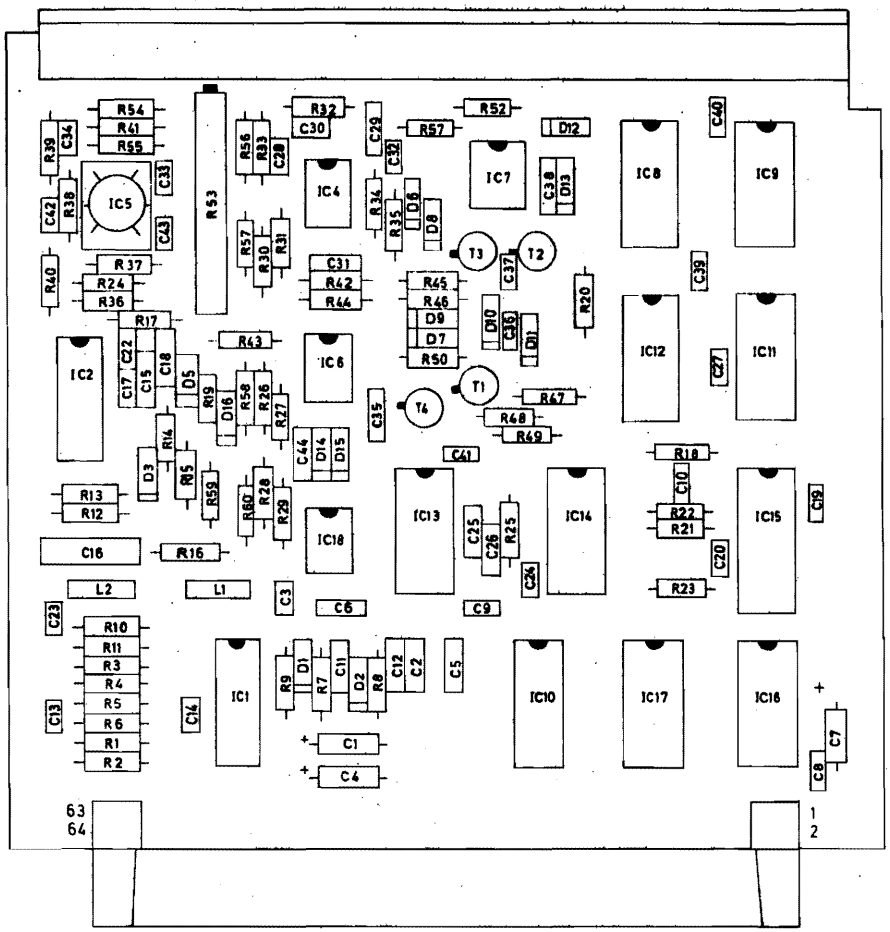

Figure 4-8A CARD LAT 2M24
COMPONENT SURVEY

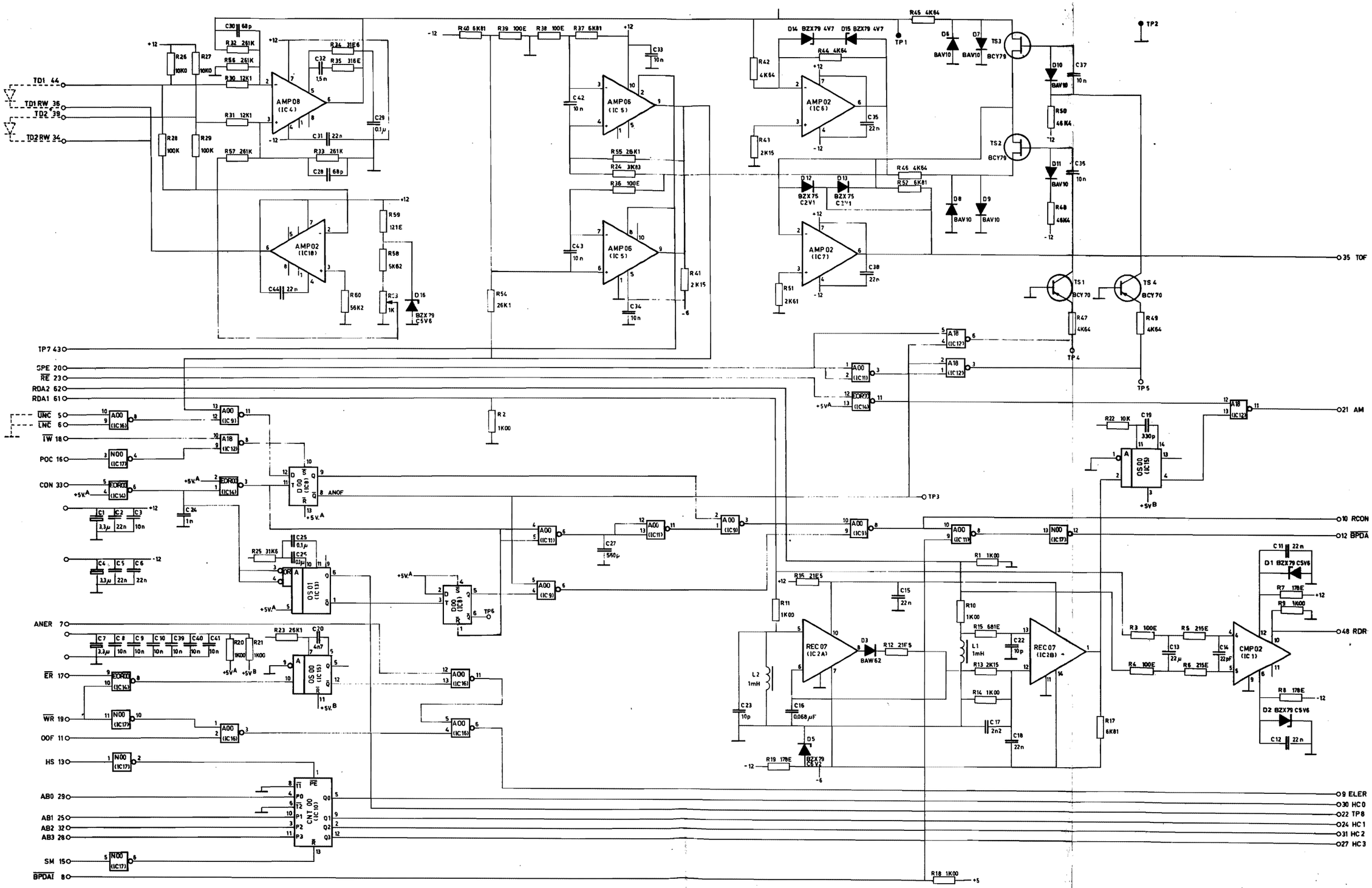

Figure 4-8 CARD LAT 2M24

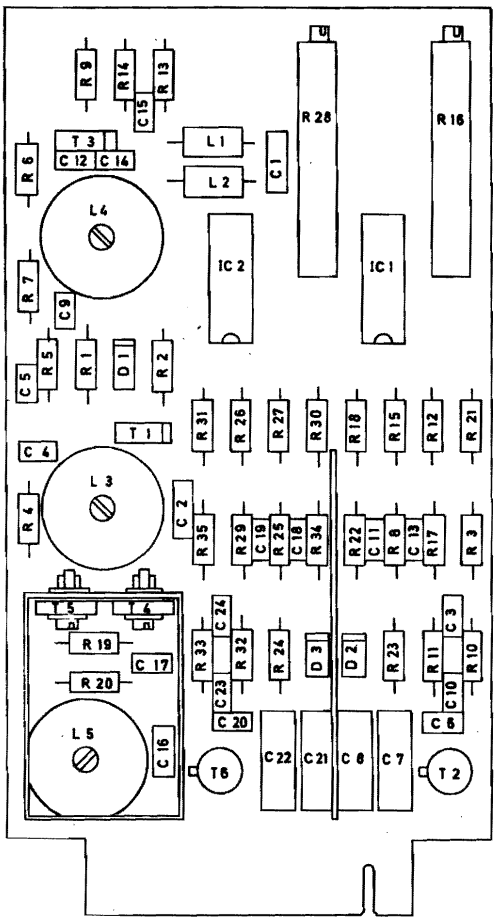

Figure 4-9A CARD MEANDER CARD
COMPONENT SURVEY

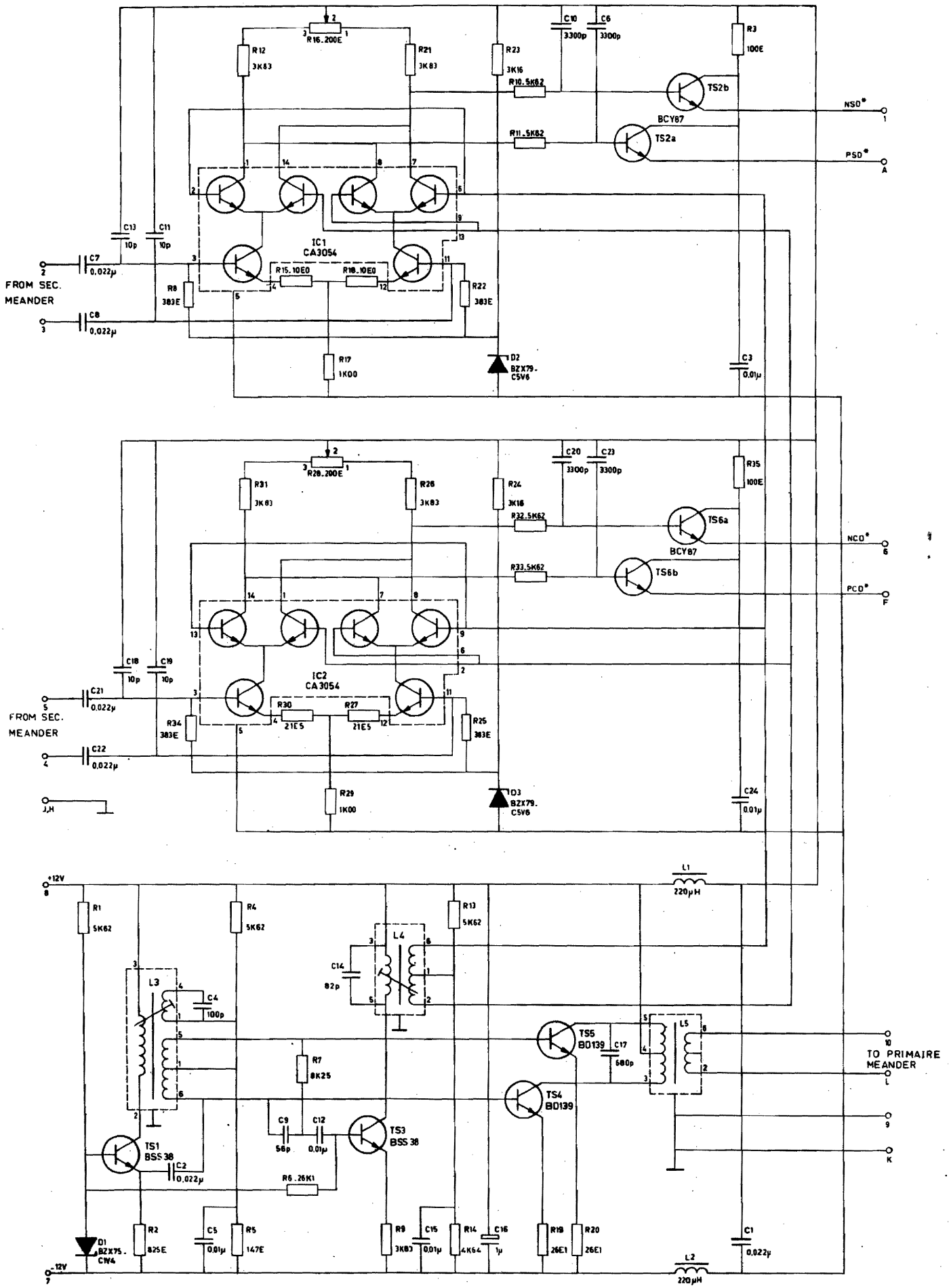

Figure 4-9 CARD MEANDER CARD

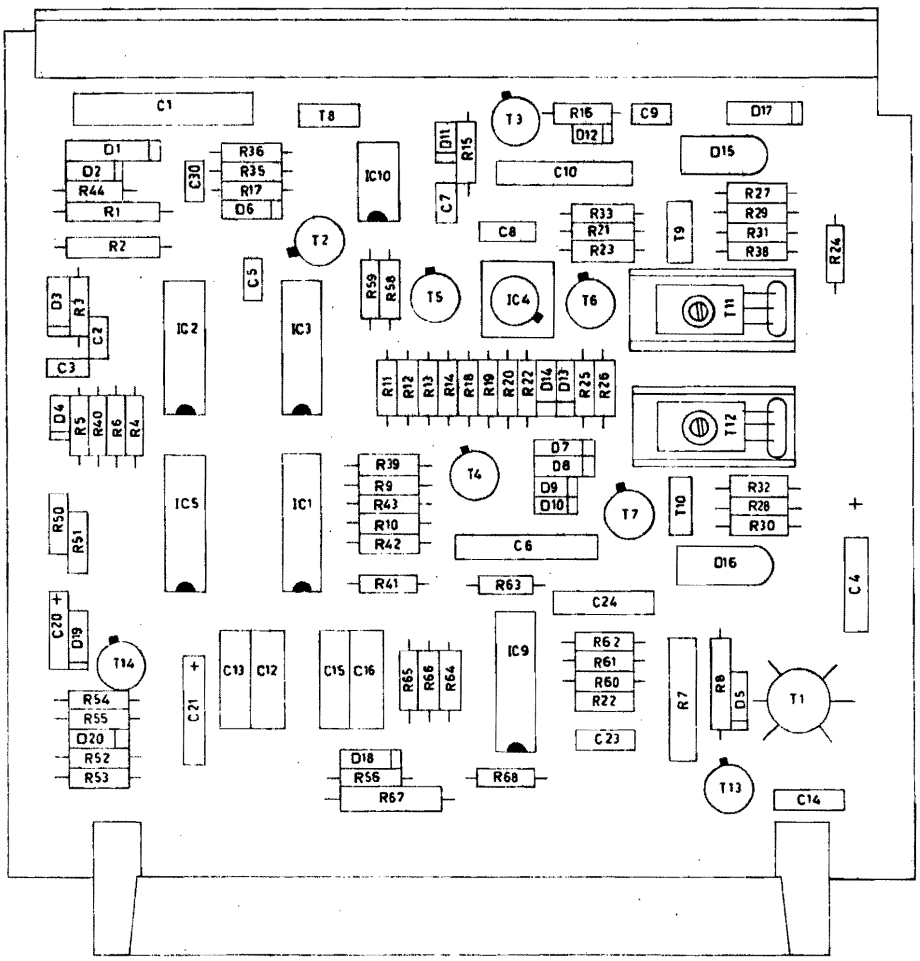

Figure 4-10A CARD PA 1A28
COMPONENT SURVEY

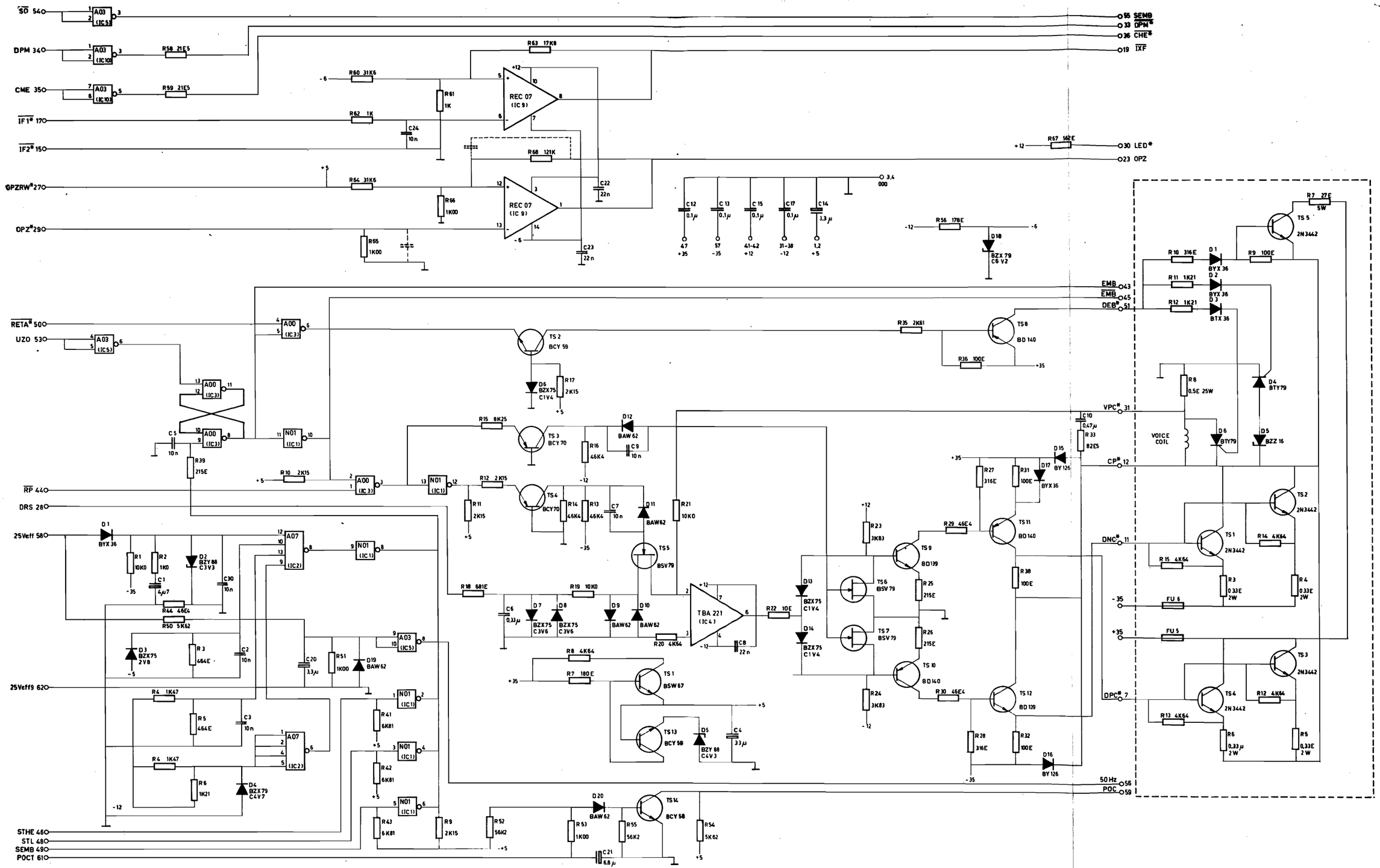

Figure 4-10 CARD PA 1A28

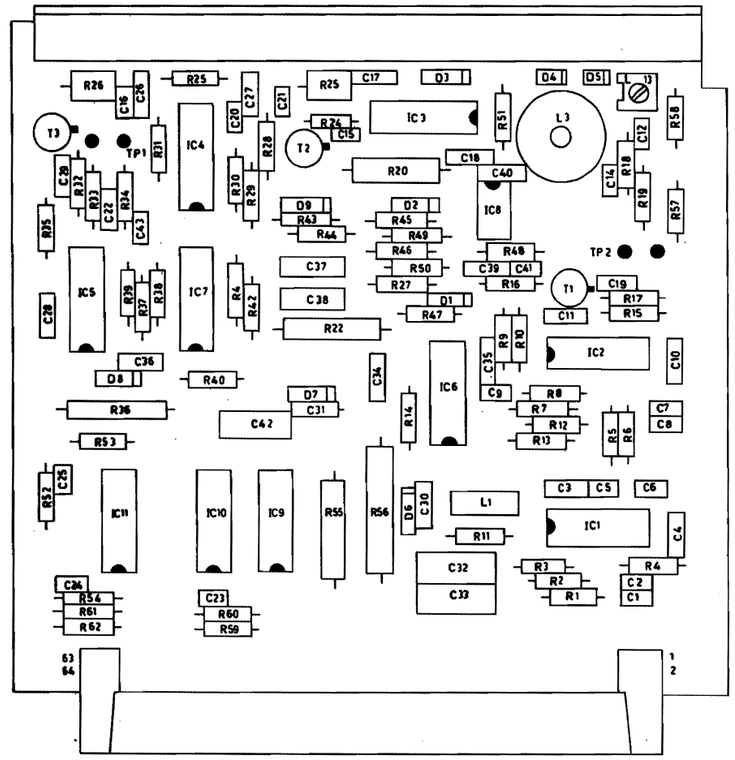

Figure 4-11A CARD R.R 2M63
COMPONENT SURVEY

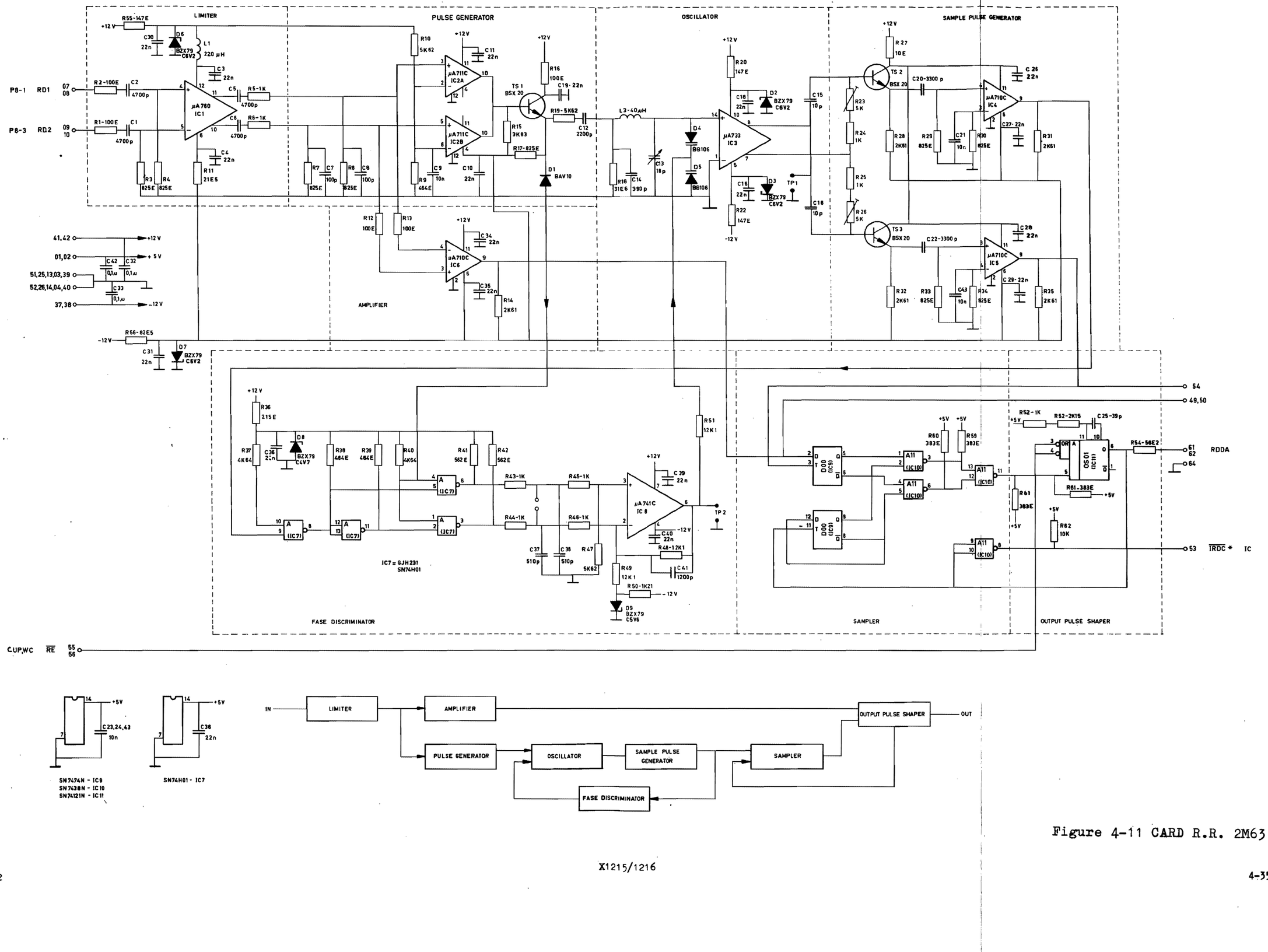

Figure 4-11 CARD R.R. 2M63

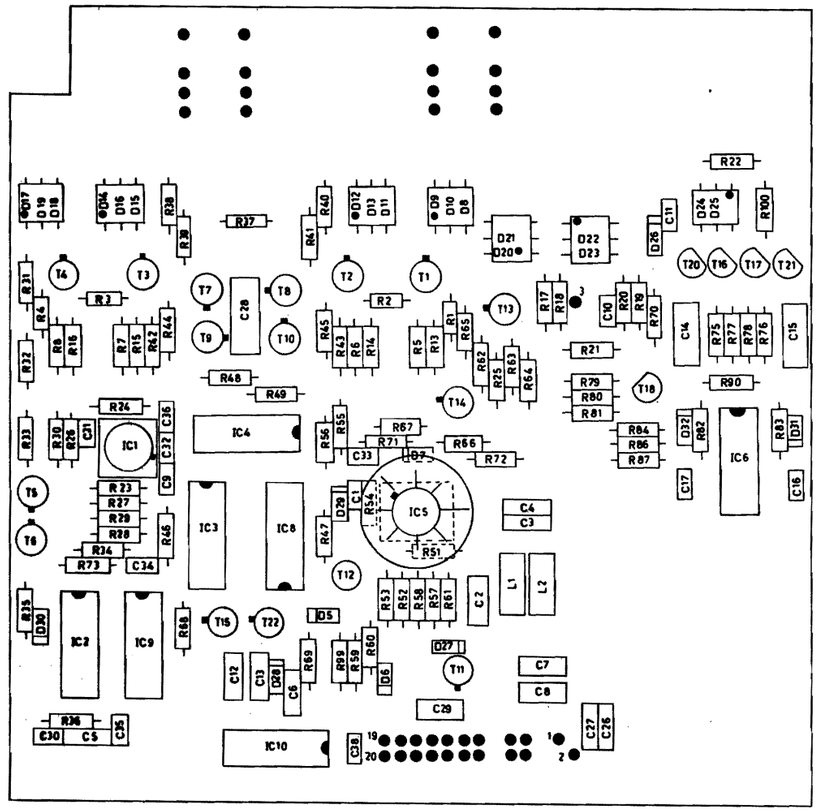

Figure 4-12A CARD R.W 5M03
COMPONENT SURVEY

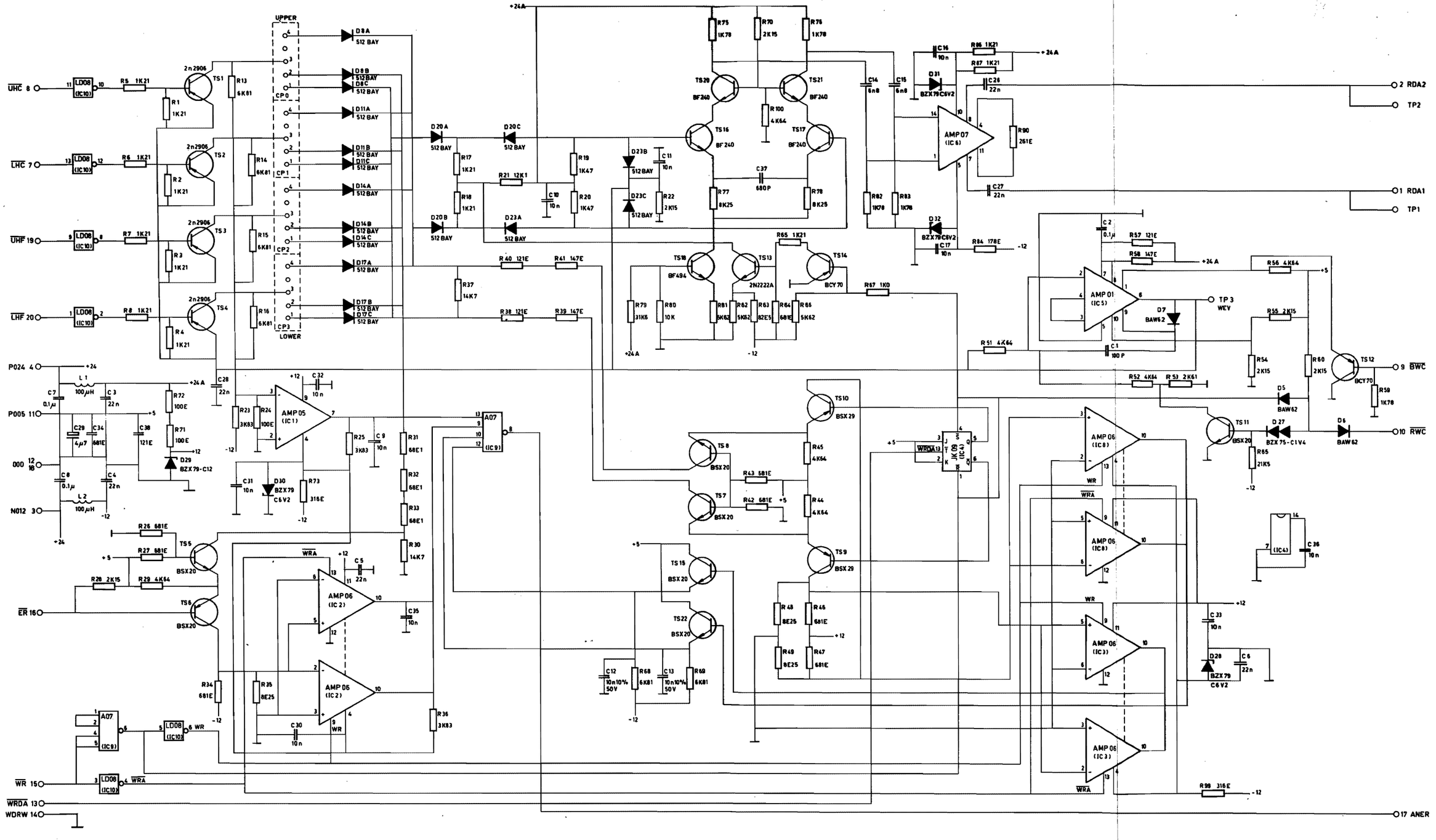

Figure 4-12 CARD R.W. 5M03

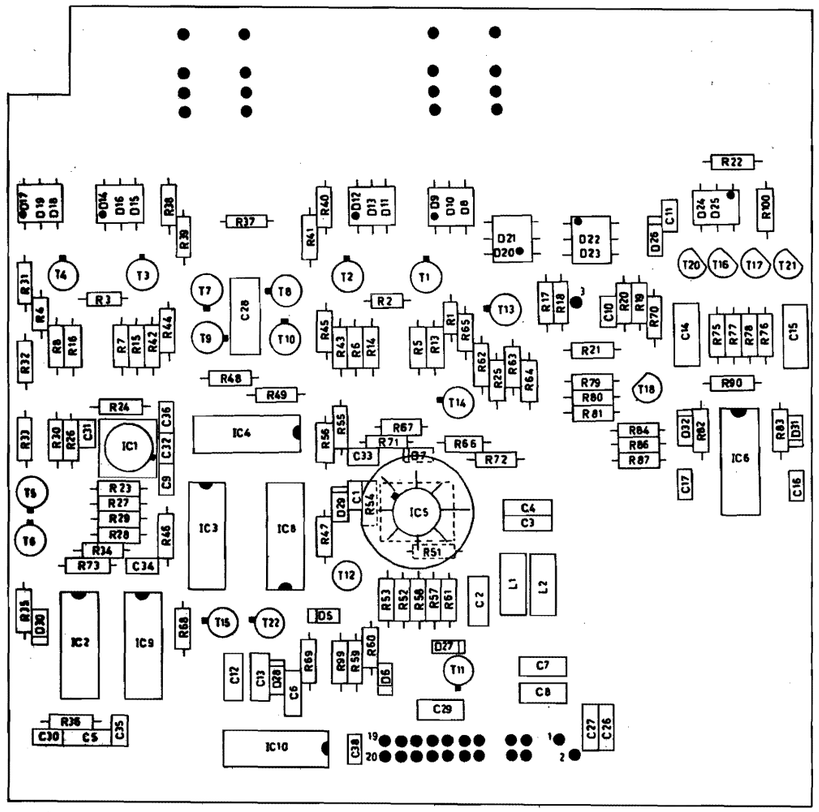

Figure 4-13A CARD R.W 6M03
COMPONENT SURVEY

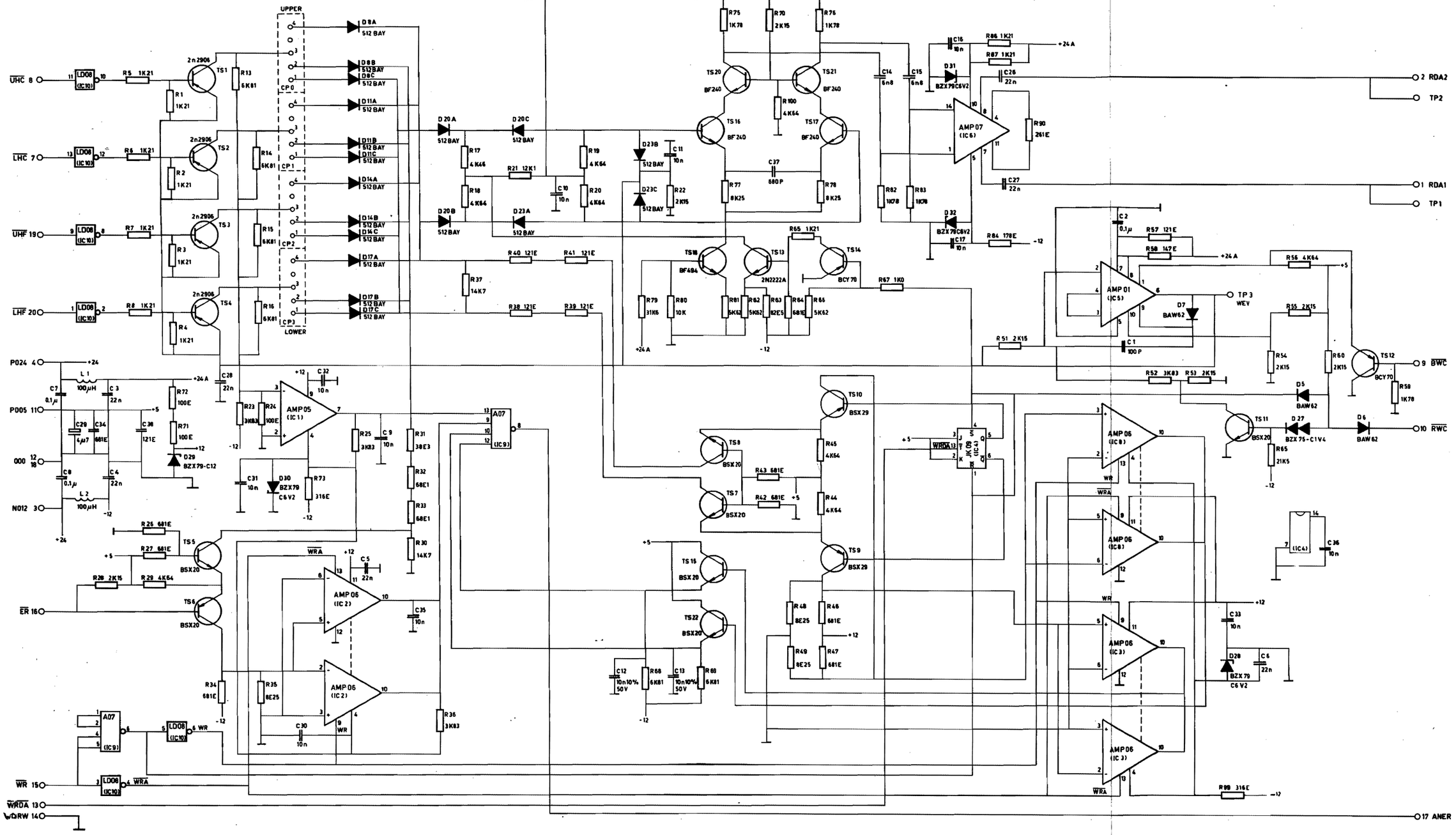

Figure 4-13 CARD R.W. 6M03

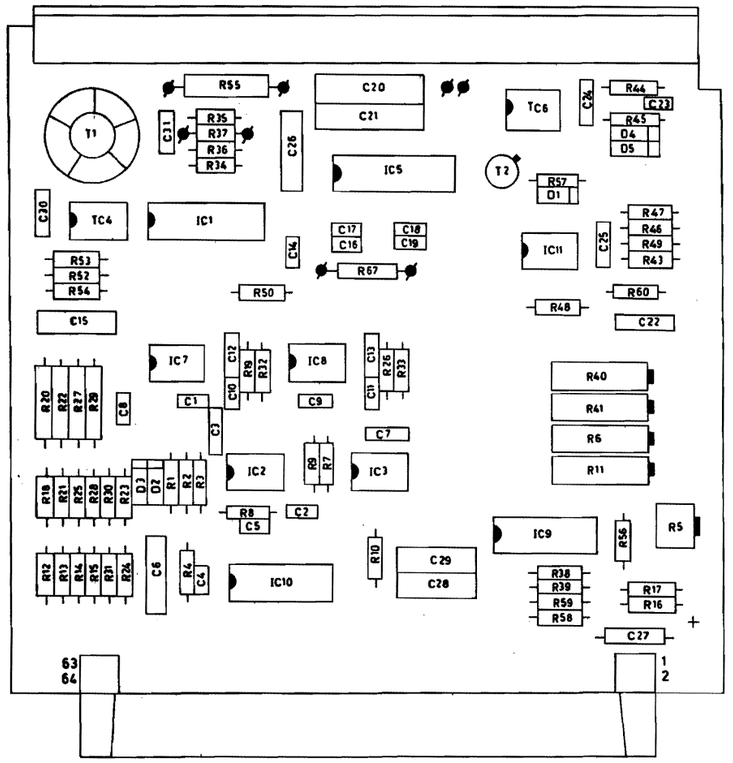

Figure 4-14A CARD S.E. 2M26
COMPONENT SURVEY

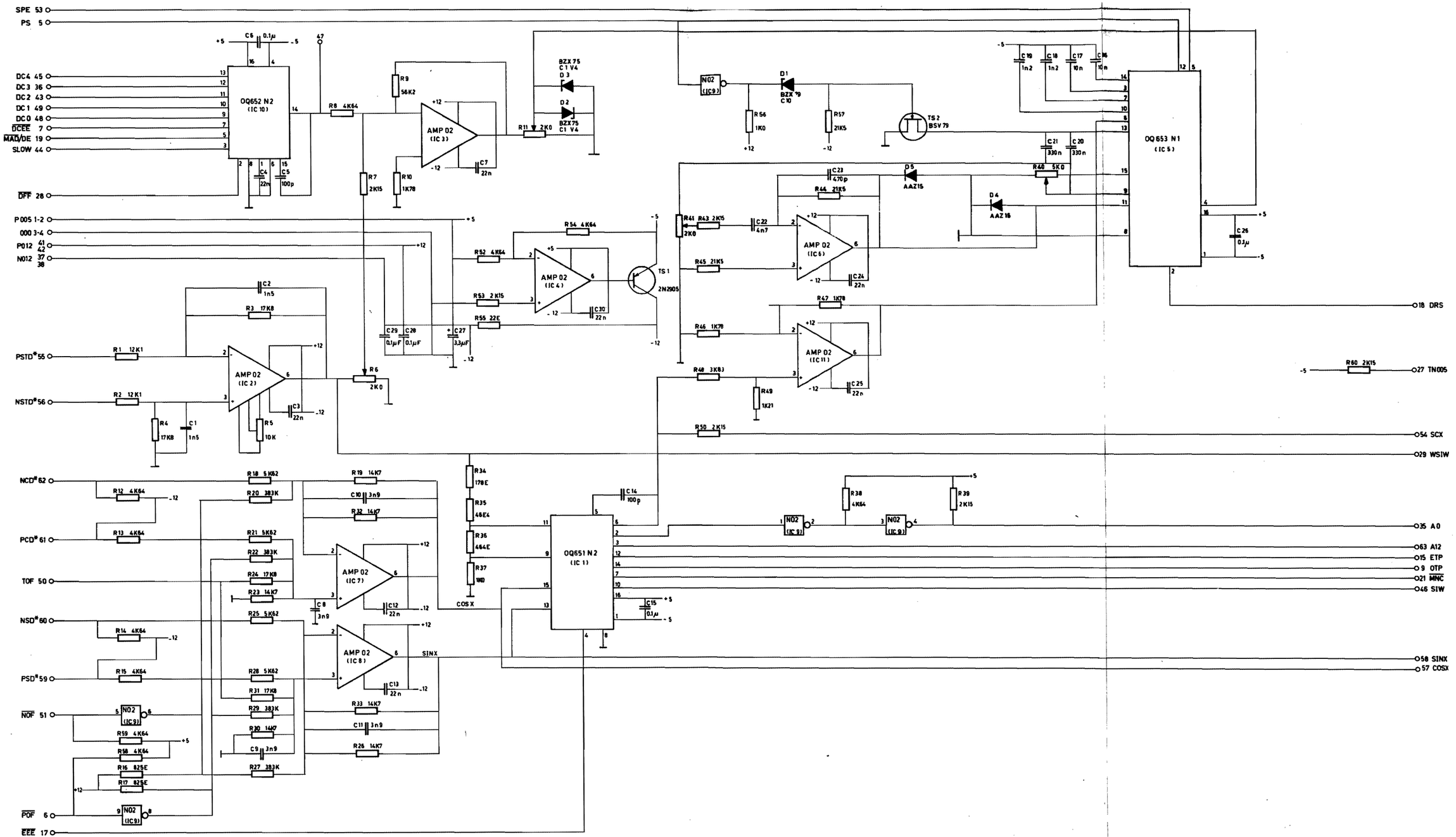

Figure 4-14 CARD S.E. 2M26

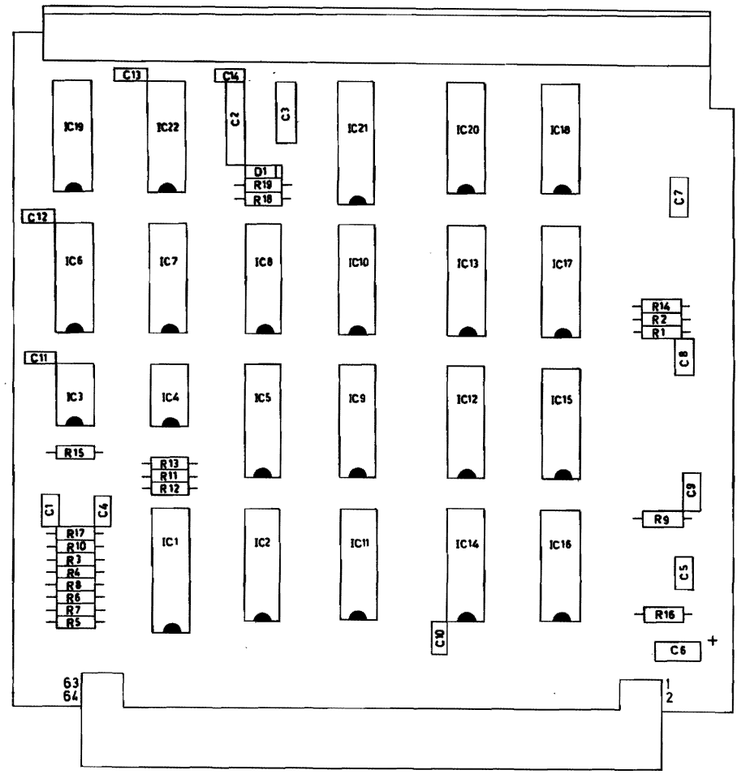

Figure 4-15A CARD S.S. 3L57
COMPONENT SURVEY

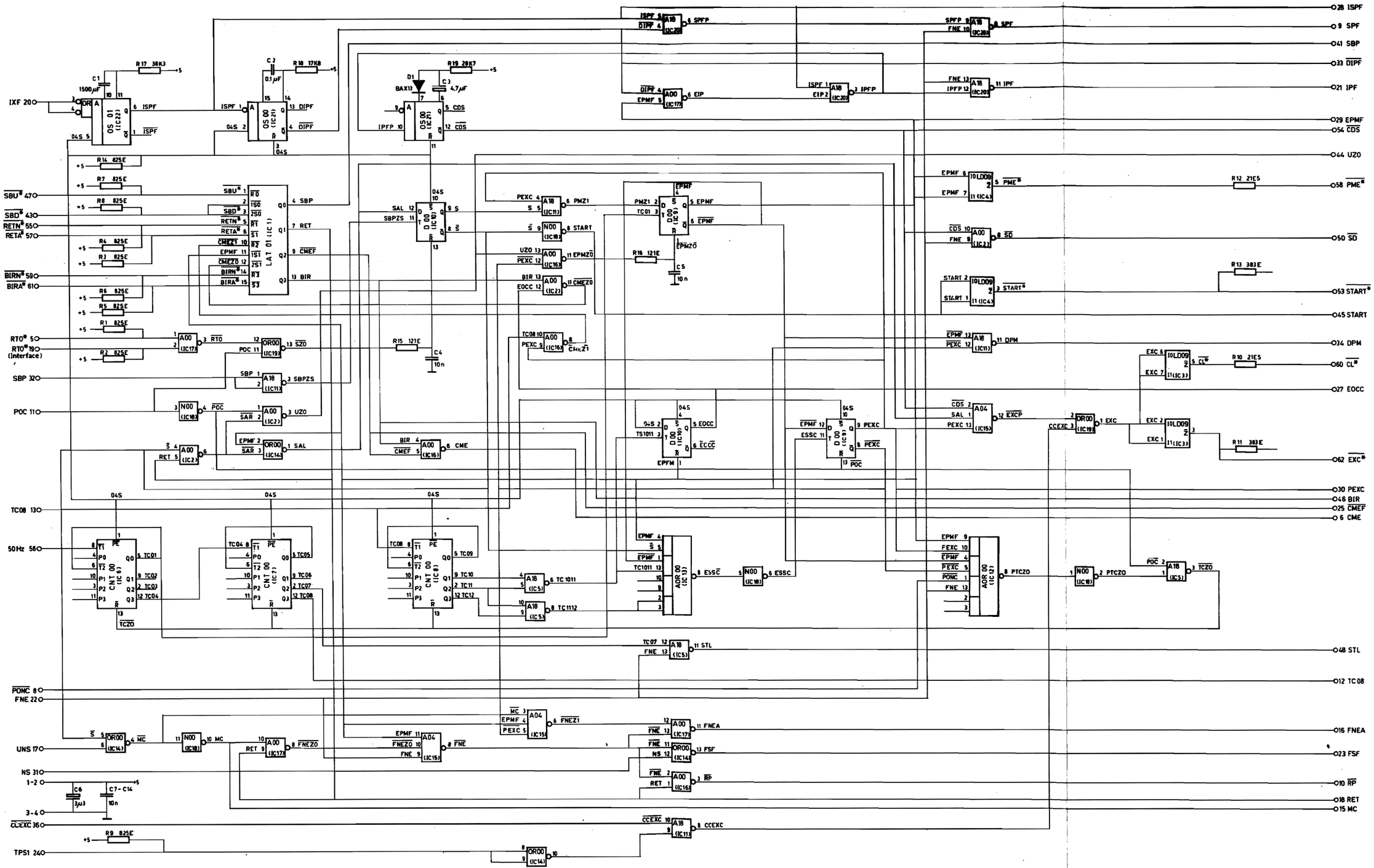

Figure 4-15 CARD S.S. 3L57

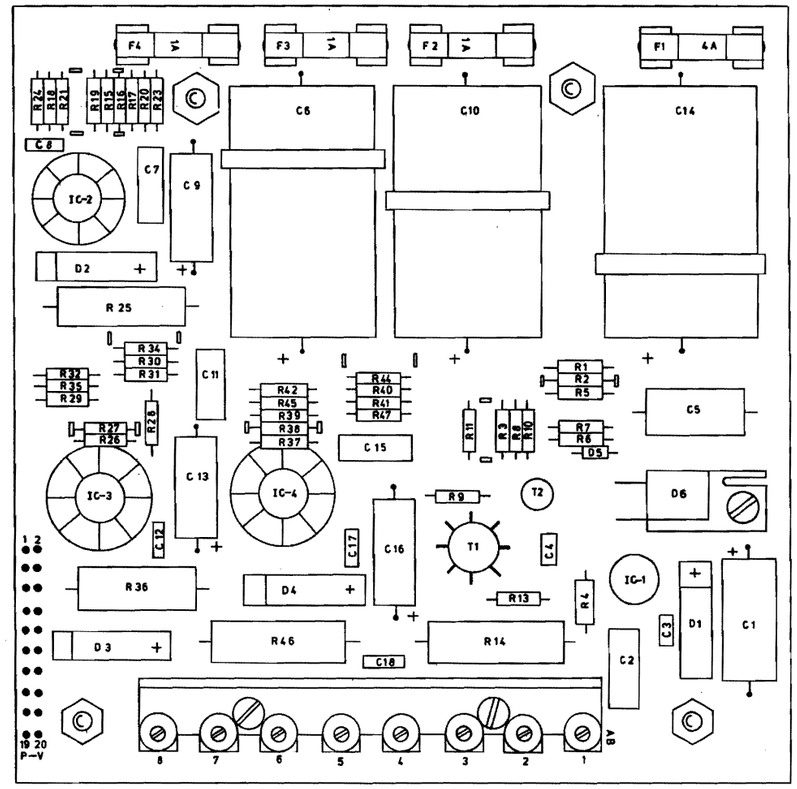

Figure 4-16A CARD POWER CARD
COMPONENT SURVEY

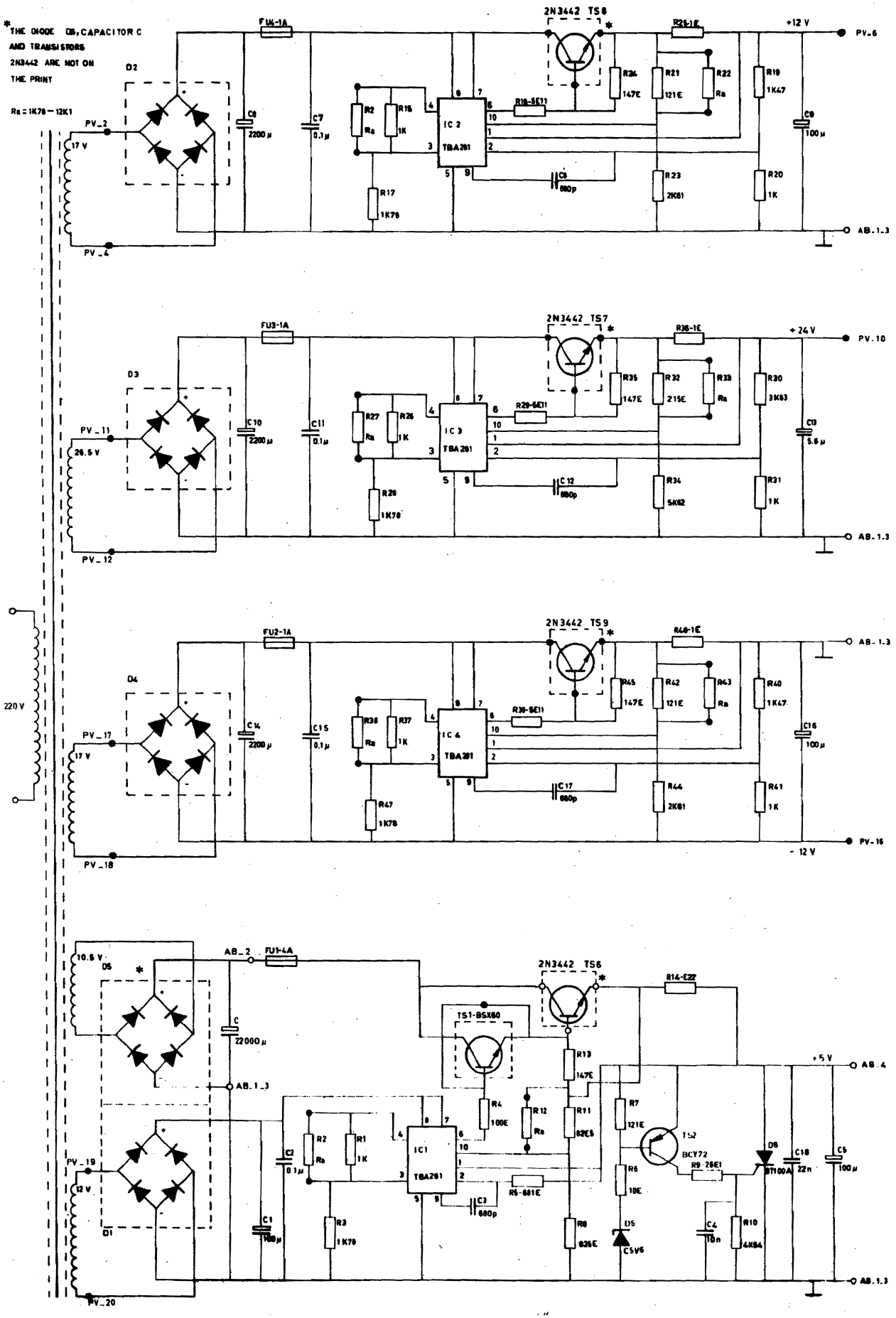

Figure 4-16 CARD POWER CARD

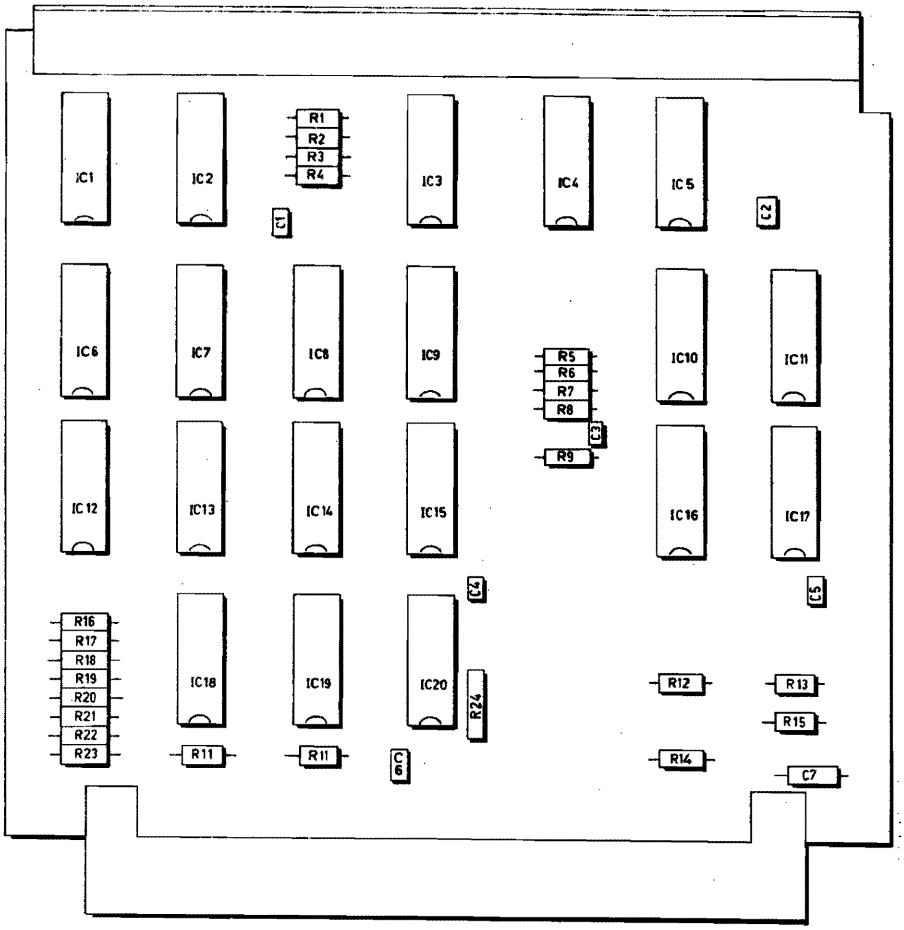

Figure 4-17A CARD SERVICE CARD
(A) 2L28 COMPONENT SURVEY

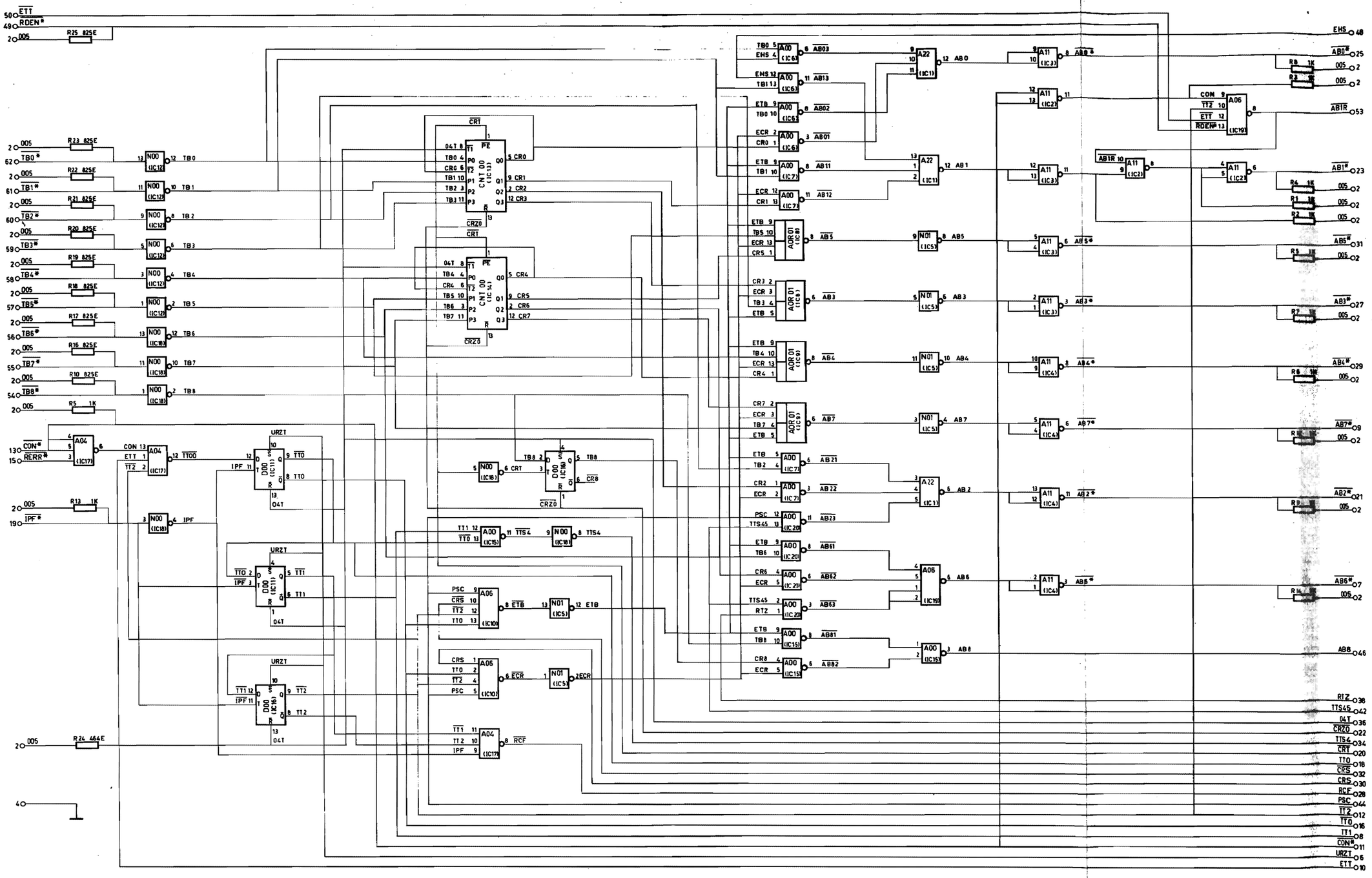

Figure 4-17 CARD SERVICE CARD (A) 2L28

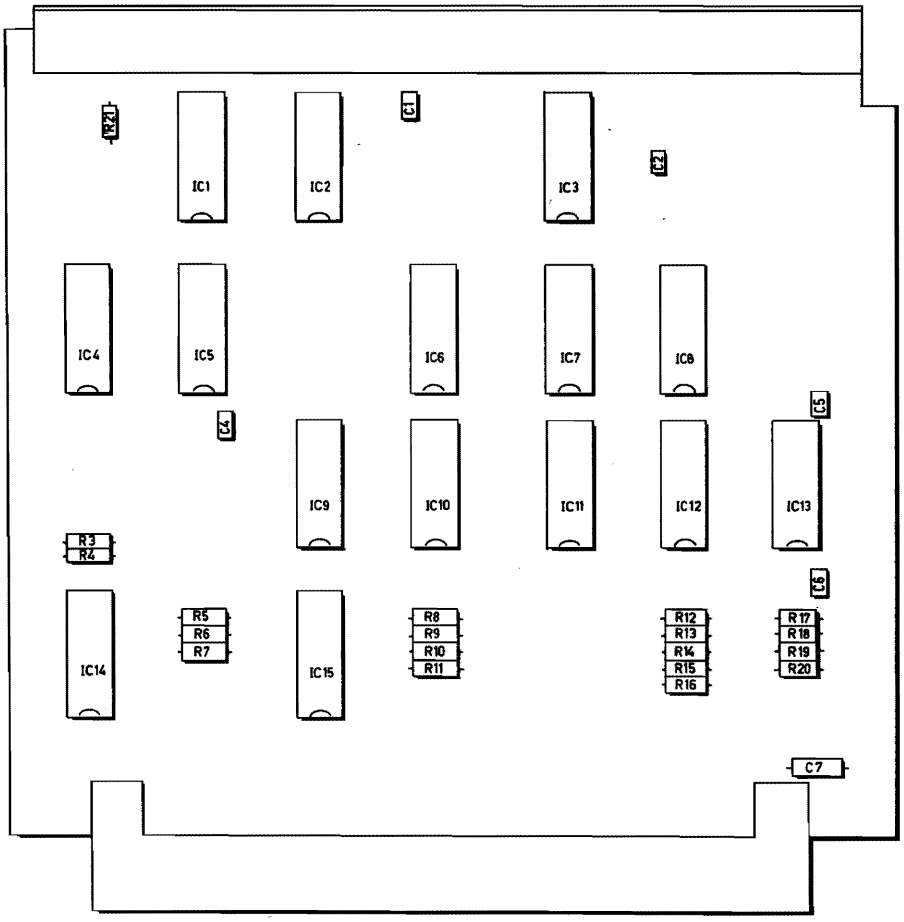

Figure 4-18A CARD SERVICE CARD (3)
2L29 COMPONENT SURVEY

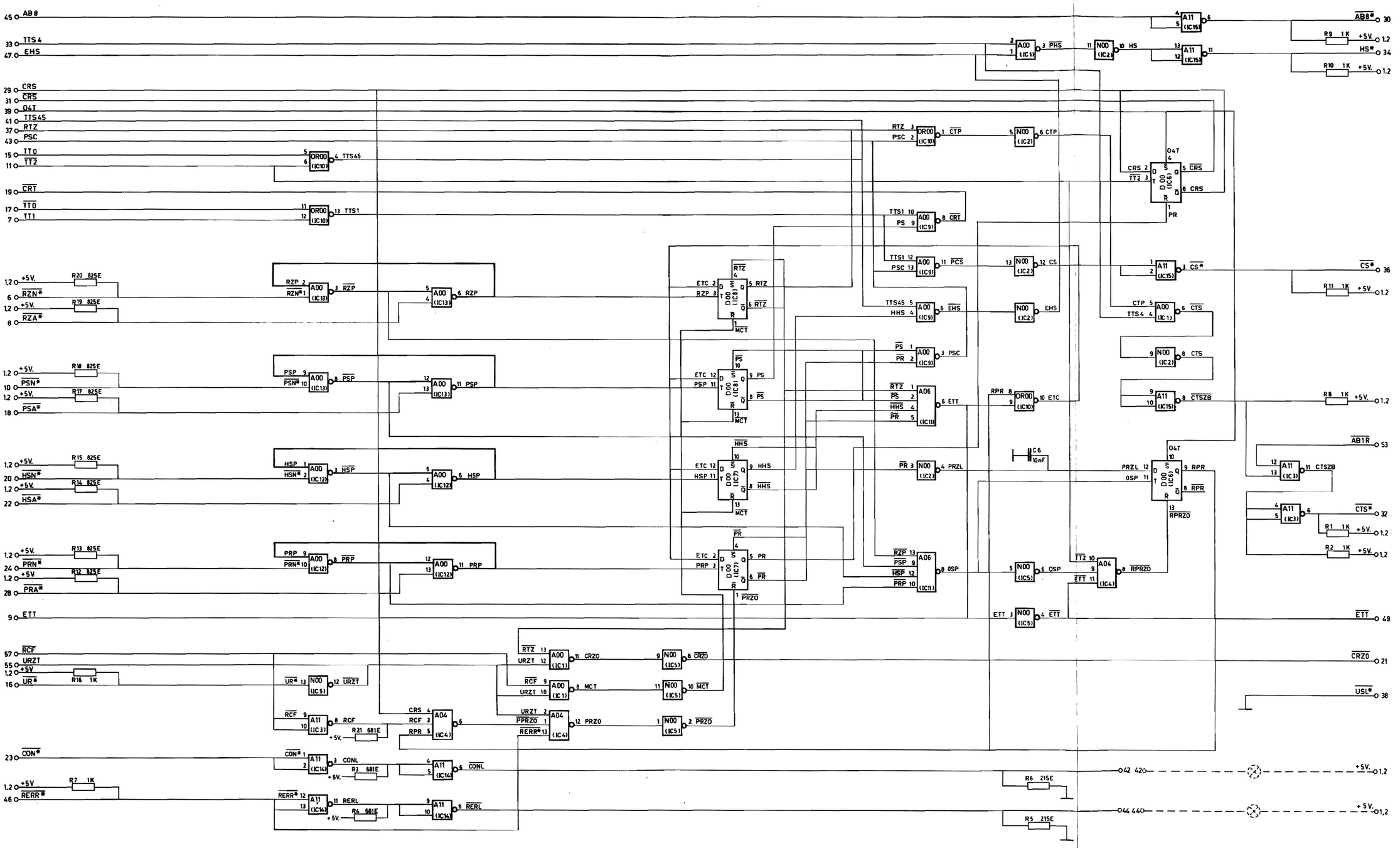

Figure 4-18 CARD SERVICE CARD (3) 2L29

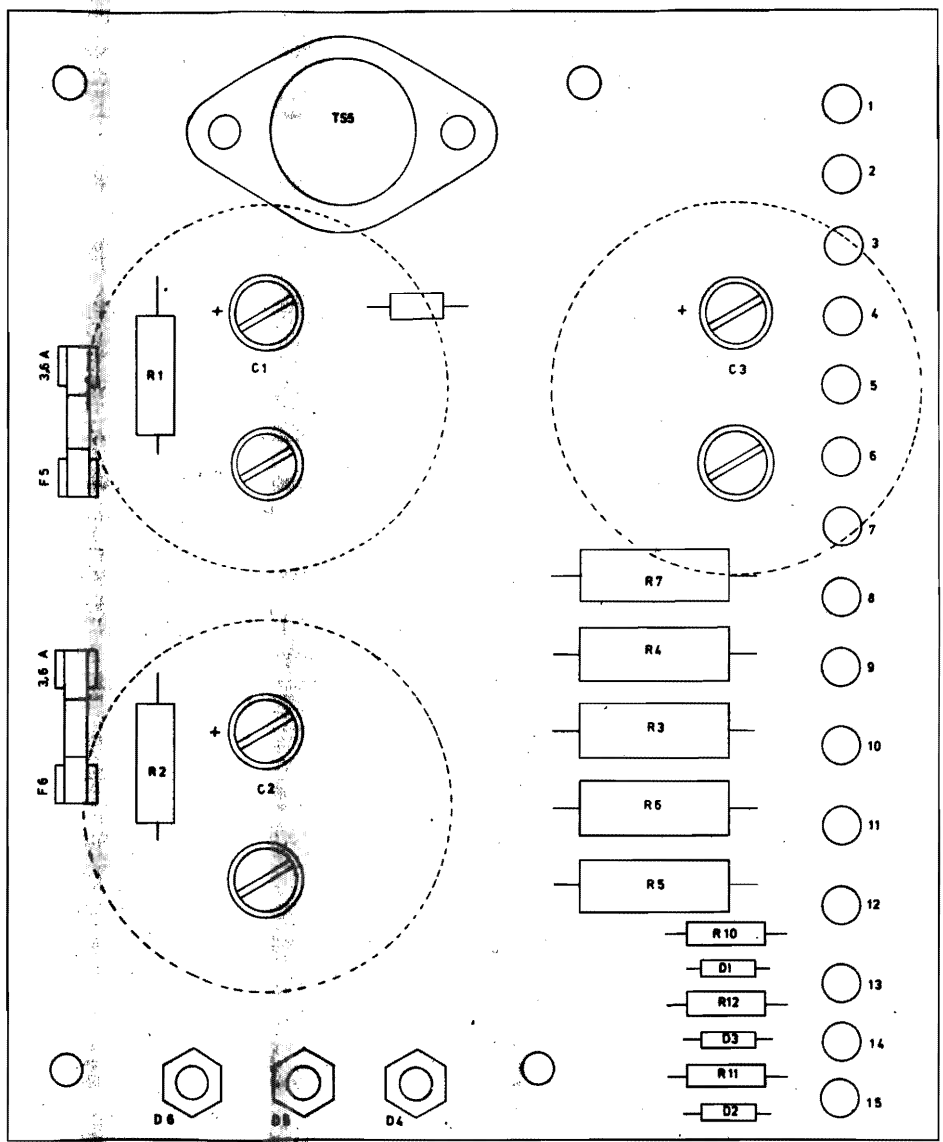

Figure 4-19A CARD DRIVER PRINT 1M87
COMPONENT SURVEY

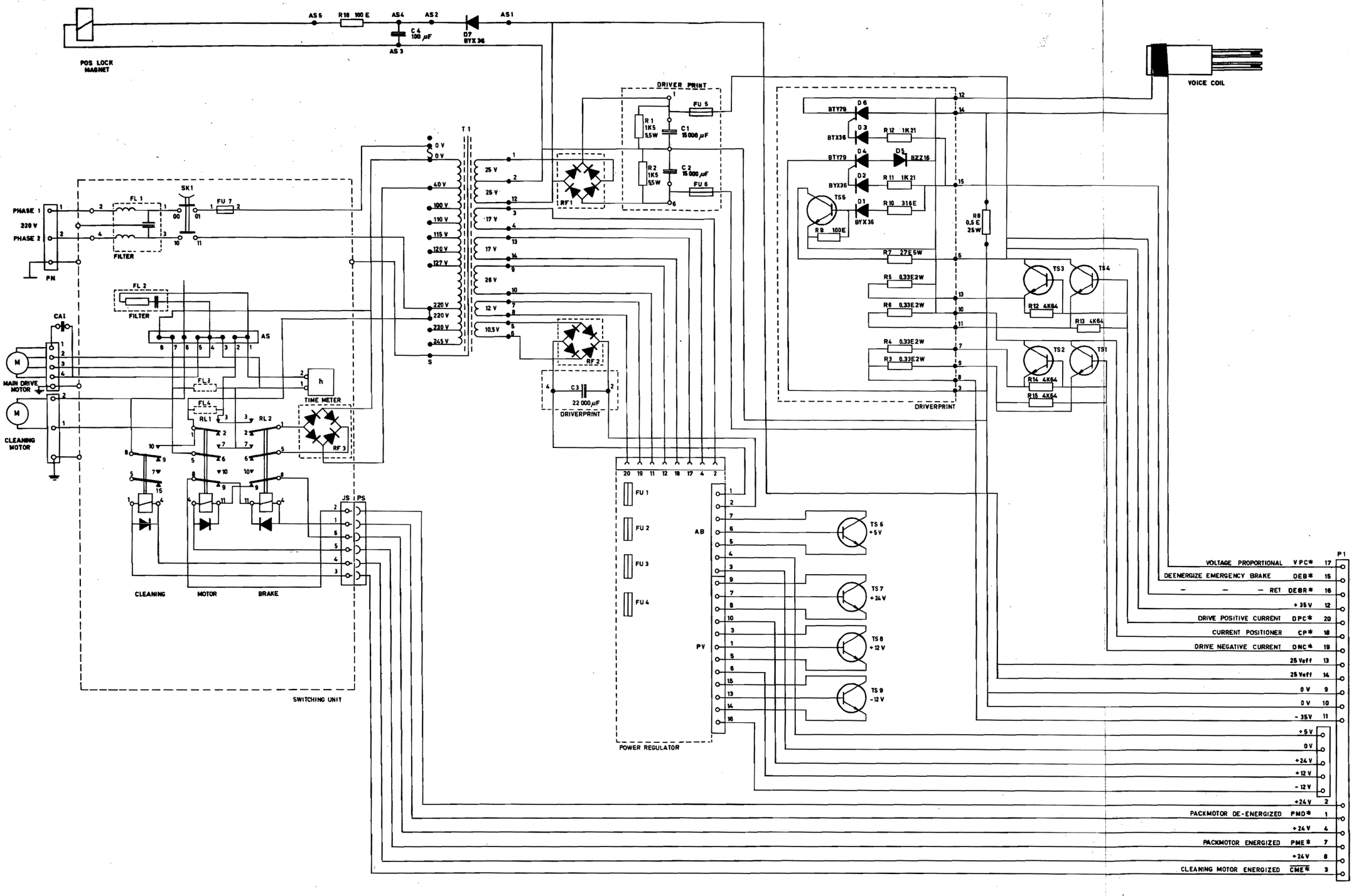

Figure 4-19 POWER SUPPLY AND DISTRIBUTION

X1215/16 (ABOVE SERIAL NUMBER 2000)

Cartridge Disk Drive Unit

Vol. V: Electronics

Data
Systems

1.1 LIMITER (figure 5-1)

A basic limiter circuit consists of two diodes connected as in the drawing.

A diode conducts when approximately 0.7 volts is present in the forward direction.
When the input voltage goes more positive than 0.7 volts, diode D2 conducts and when the voltage goes more negative than 0.7 volts, diode D1 conducts.
The output voltage is within the limits ± 0.7 volts.

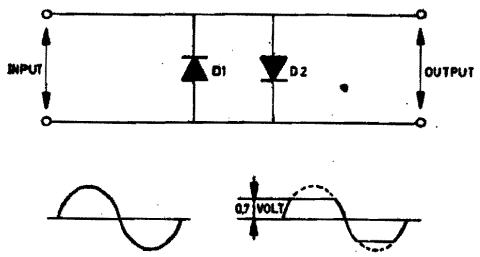

Fig. 5-1 Limiter

1.2 RELAY DRIVER (figure 5-2)

A logical '0' at the input switches off the inverter IC1 and the output voltage becomes positive.

This positive voltage primes the transistor T1.
If a relay is connected between the +24V and the output, the relay will be energised.

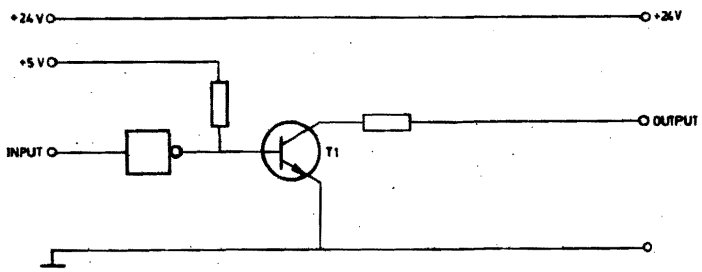

Fig. 5-2 Relay Driver

1.3 ELECTRONIC SWITCH (figure 5-3)

When a logical '0' is connected to the gate input of the circuit, the transistor T1 is switched off so that a negative voltage is present on collector. The F.E.T. (Field Effect Transistor) is not conducting, i.e. the input and output are isolated.

When a logical '1' is present on the gate input, the transistor T1 conducts as well as the F.E.T. The input are connected together via the F.E.T.

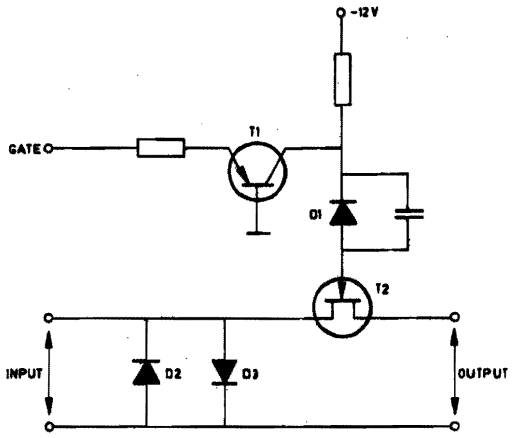

Fig. 5-3 Electronic Switch

1.4 DIFFERENTIAL AMPLIFIER (figure 5-4)

The differential amplifier is used in the CDD in a number of different ways, thus:

a) With a darlington pair configuration at the input, providing greater input impedance.

b) A transistor in the emitter circuit, realising a high impedance to earth. This provides for a better 'in-phase' suppression.

c) Normal mode.

As the basic principles apply to all three configurations, the normal mode circuit is described. The reasons for using a differential amplifier are as follows:

(a) The circuit functions at a requisite voltage level which should not be amplified.
(b) To overcome external pick-up.
(c) When small supply voltage variations should not effectively influence the functioning of the circuit.

The functioning of the circuit shown is as follows:

If the input to the base of one transistor changes, the output voltage on the collector changes. However, the current change through the common emitter resistor R effectively changes the conditions to the other transistor, resulting in a change in the output voltage of that opposite to each other.
If both inputs change the same amount and in the same mode, no difference is detected between the output voltage on the two collectors.

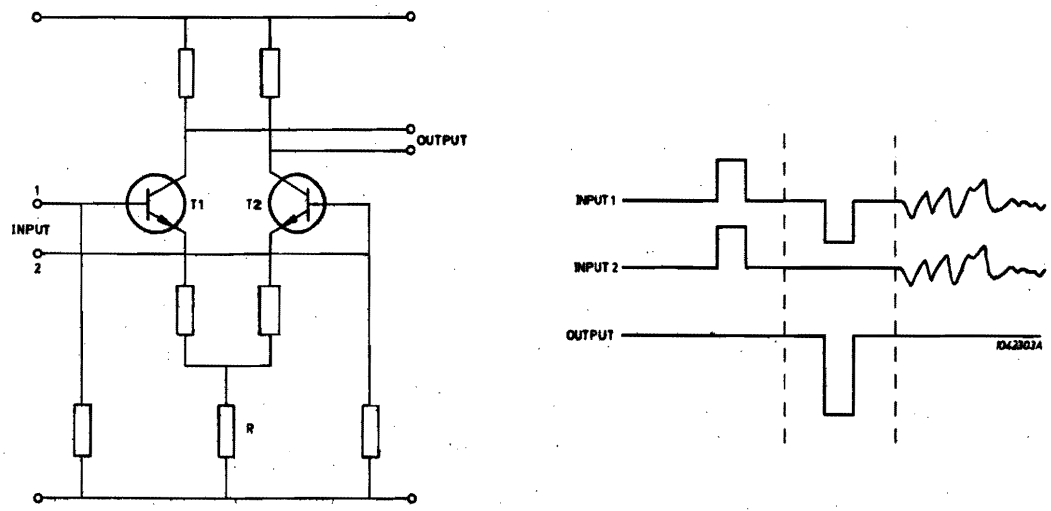

Fig. 5-4 Differential Amplifier

1.5 OPERATIONAL AMPLIFIER (figure 5-5)

The operational amplifier (op-amp) is an amplifier with a very high gain (10^6 x or higher).
An applied input voltage is consequently always amplified to the supply voltage if no special actions are taken.
A feed-back loop is introduced to limit the amplification. The op-amp is then used in a closed-loop amplification mode.
Three types of feed-back loops are used, resulting in the following modes:

Amplification Mode

A resistor is used as the feed-back element. The amplification is the result of the feed-back resistor R2 and the input resistor R1, thus:

$$\text{Amplification} = \frac{R2}{R1}$$

If the negative (-) input is used, inversion ensures through the device. No inversion takes place if the positive (+) input is used.

Integrator Mode

Using a capacitor as a feed-back element, an integrator circuit is realised. Small, long-lasting variations on the input are translated into large, short variations, giving rise to undamped oscillations.

Differentiator Mode

With a capacitor as the input (impedance) and a resistor as the feed-back element, a differentiator circuit is realised. Large, short variations are damped out.

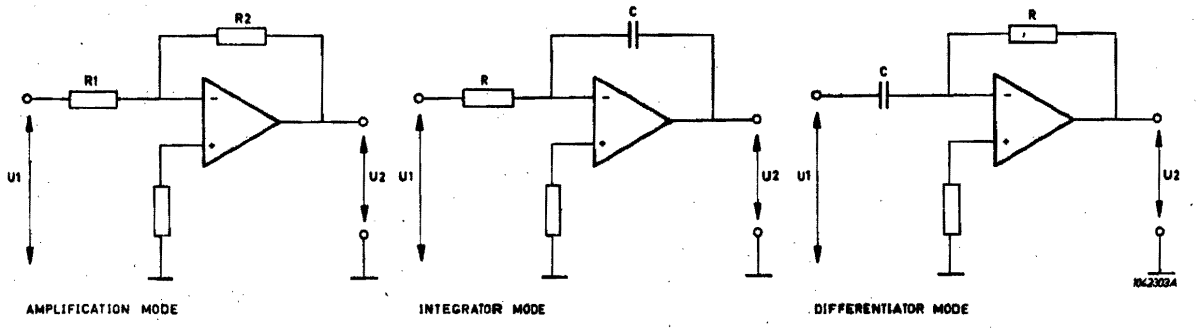

Fig. 5-5- Operational Amplifier

1.6 WINDOW CIRCUIT (Comparator) (figure 5-6)

This circuit contains two comparators connected as shown in the diagram. When the voltage at point A is between - 0.6 V and + 0.6 V, the circuit is balanced, resulting in two equal but opposite voltages at the outputs of the op-amps. The resulting voltage will be zero, and the transistor will not be conducting. The output voltage on the collector will be + 5V, which is a logical '1'. A voltage lower than - 0.6V at the input will unbalance the outputs of the op-amps, resulting in a positive voltage on the base of the transistor. The transistor then conducts and the output goes to a logical '0'. (See "The complete linear book" of Fairchild).

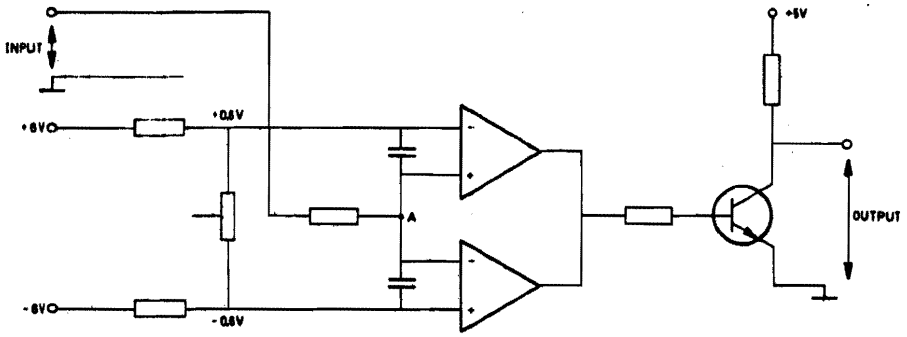

Fig. 5-6 Window Circuit

1.7 MEANDER CARD

The coil L3 and the capacitor C4 form a tuned circuit and determine the frequency of oscillation.
This oscillating signal is used as follows:

a) By the power stage transistors T4 and T5, to produce a signal via L5. This signal is presented to the primary meander on pins L and 10.

b) As a synchronous detection signal via transistor T3 and coil L4 to the demodulation stages, IC1 for the secondary meander SINX and IC2 for the secondary meander COSX.

A balanced detection signal from L4 and the information from the secondary meander are applied to the long-tailed pair, IC1 and IC2. The demodulated outputs of IC1 and IC2 are applied to transistors T2 and T6.
Transistors T2a and T6b always deliver the positive transitions of the sine wave.
Transistors T2b and T6a always deliver the negative transitions of the sine wave.
The resistors R16 and R28 make it possible to minimize the offset of the signals when no head movement is generated.

1.8 VOICE COIL CURRENT DISTRIBUTION

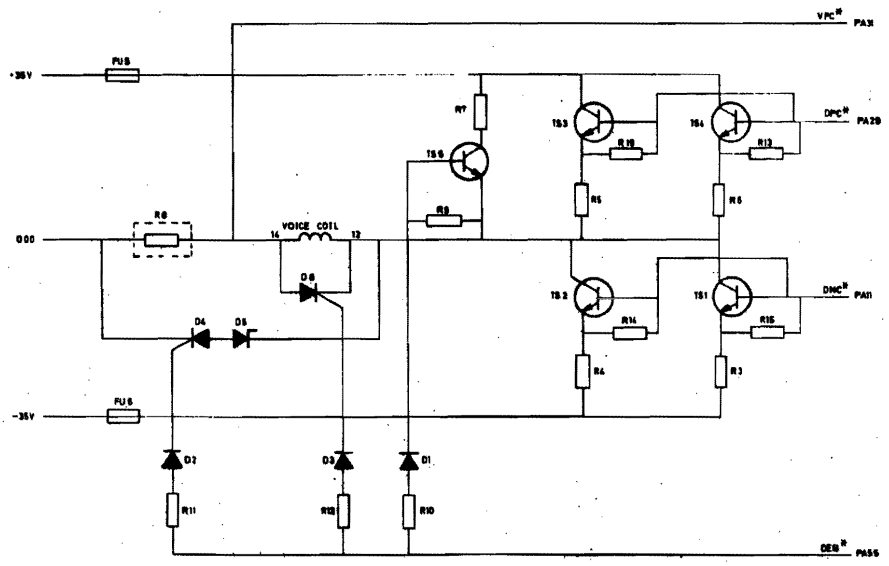

X1215/16 (ABOVE SERIAL NUMBER 2000)

Cartridge Disk Drive Unit

Vol. VI: Mechanics



Data
Systems

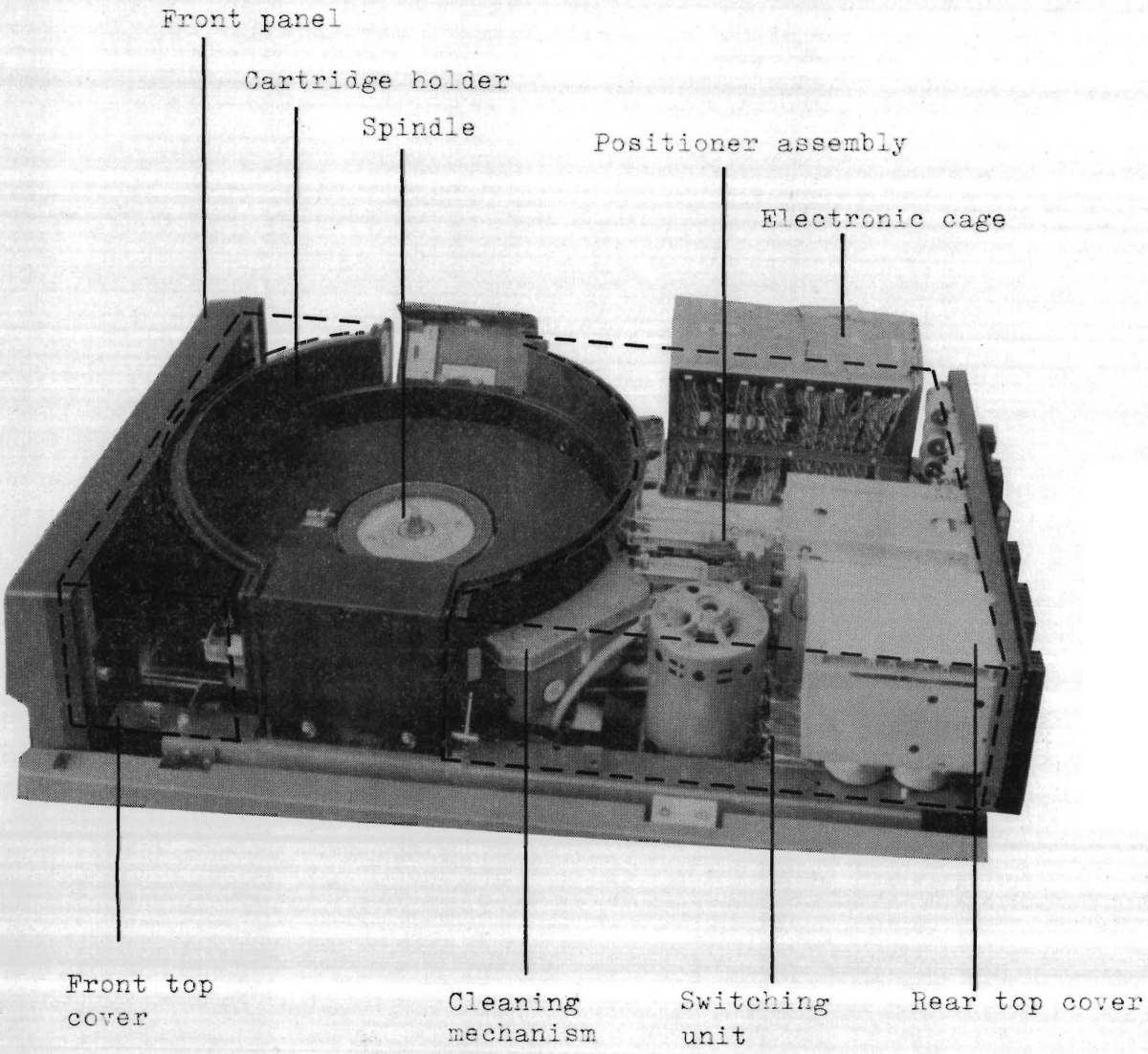
Front panel
Cartridge holder
Spindle
Positioner assembly
Electronic cage
Front top cover
Cleaning mechanism
Switching unit
Rear top cover

Figure 6-1

The basic structure of the CDD (Cartridge Disc Drive) is a T-shaped aluminium base plate which is spring-mounted on a metal frame. On the base plate are mounted the spindle, the positioner mechanism, the index/sector transducers, the spindle drive motor and the cartridge holder. The base plate precisely aligns the components, providing mechanical stability for compatible recording.
In the metal frame are mounted the power, supply the switching unit, the cleaning mechanism, the electronic cage and the base plate.
The Disc Drive Unit is completed with the top covers, bottom cover and front panel.

1.2 DUST COVERS

The enclosure of the CDD is divided into five parts. The reasons are to prevent entry of dust into the machine and to make a number of compartments to effectively control the clean air flow in the machine.
The front panel covers the front side. This panel is removable (figure 6-1) so as to allow access to the air filters.
The rear of the disc drive is covered by a vertical casting on which are mounted the heat sinks of the power supply and power amplifier. The bottom is covered by the bottom cover. The plate can be removed by unscrewing the tour screws.
The top is covered by two covers; the smaller of the two is called the front top cover, the other is called the rear top cover. The front top cover may be removed by unscrewing two bolts, and the rear top cover by unscrewing four bolts. All six bolts are located in the sides of the CDD.

1.3 SWITCHING UNIT

The Switching Unit, which is situated in the rear of the Disc Drive Unit contains:

a) Three relays.
b) A time elapsed meter.
c) Fuse and fuse holder.
d) Mains filter.
e) One starting capacitors for the drive motor of the spindle.
f) Suppression filter for the drive motor of the spindle.
g) Power on/off switch.
h) Rectifier for the brake voltage.

The first relay serves to energise the cleaning motor and switches on an extra starting capacitor.
The second relay serves to energise the spindle motor, at the same time de-energising the third relay which connects the electrical brake to the spindle motor.
When the third relay is energised, and the spindle motor is thus braking electrically, the second relay is de-energised.

1.4 COOLING AND CLEANING UNIT

The fresh air cooling system comprises an impellor fan which is fitted to the spindle and two filters. Air is drawn into the unit through an inlet in the underside of the front panel. The air passes through a coarse filter, and then through a fine filter.
The air is then drawn into the cartridge and the fixed disc area. After cooling the disc area, the positioner voice coil, the electronics and power supply, the air finally exists the unit through openings in the dust cover.
However, for complete safety, each time a cartridge is loaded and the drive is started, a cleaning cycle is undertaken. This is done by a cleaning mechanism which consists of four brushes driven by a cleaning motor. 2½ seconds after the disc drive unit is started, the cleaning motor starts swinging the brushes into the cartridge and over the fixed disc and then back to the rest position, slowly sweeping them across the rotating recording surfaces.
Any undesirable particles present are dislodged from the surfaces and blown away by the clean air blow.

1.5 CARTRIDGE HOLDER

The cartridge holder is fixed to the base plate by three bolts, and is accessible when the drive is pulled out of the rack.
Four notches in the circumference of the cartridge correspond with four cams on the inside of the cartridge holder.
Only one position of the cartridge, with respect to the disc drive is possible.
Two clamps, fitted on the cartridge holder, push the cartridge to the cartridge when they are closed.

1.6 SPINDLE MECHANISM

The spindle assembly provides the mechanical coupling between the recording discs and the drive motor. The fixed disc is directly mounted on the spindle hub. The cartridge disc engages the spindle only when the cartridge is fully seated in the drive unit. The coupling is accomplished by means of a spindle mounted magnetic ring and an armature plate fastened to the cartridge disc.
A conical top on the spindle centre engages an identically machined opening in the centre of the cartridge disc and thereby aligns the disc accurately on the spindle hub. The spindle hub also carries the fixed disc sector ring.
The spindle is coupled to the spindle motor via a belt.
The spindle incorporates a metal disc with blades, which, when the spindle is rotating, sucks external air via two filters.
This air is used for cooling purposes. The spindle is earthed to eliminate static electricity acquired by the movement of the spindle. The spindle assembly is fixed to the T-shaped frame with three Allen screws.

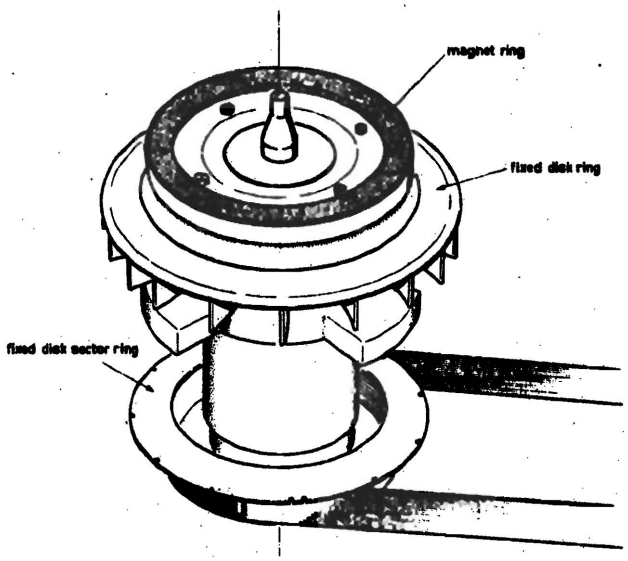

Fig. 6-2 SPINDLE

1.7 POSITIONER MECHANISM

The positioner loads and unloads the read/write heads and drives the heads to the correct position on the discs.
The four heads are mounted on a carriage that runs on guides, in and out of an assembly secured to the base plate. A voice coil attached to the carriage travels through an air gap in a large permanent-magnet, pole piece housed in the fixed part of the mechanism and this forms the means where-by the carriage is propelled in either direction:
By sending a current through the voice coil in one direction, the carriage is propelled in one direction. When reversing the current the carriage propelling force is reversed.
To monitor the speed of the positioner, a speed transducer is mounted in the magnet housing. The speed transducer consists of a coil in which a magnetic rod moves.
The position detector, used to count the number of tracks which are passed during a seek, is called the meander and consists of two parts, namely:

a) The primary meander mounted on the moving part of the positioner.
b) The secondary meander mounted on the base plate.

The magnet housing is also mounted on the base plate.

1.8 ELECTRONIC CAGE

The electronic cage contains the logics, the servo-electronics, the read/write electronics (partly) and interface circuits.
Connections between the several cards in the electronic cage are made on a back panel by means of printed tracks and wire-wrap connections.
On one side of the back panel, the electronics are connected, via plugs, to the various parts of the disc drive unit and to the control unit. These plugs are removable.
The electronic cage can be swung out for service purposes.
On the back panel, card names and numbers as well as pin numbers, are indicated as much as possible.

The CDD is designed to fit into a 19 inches wide and 30 inches deep rack. Necessary items are telescopic slides and a cable guide. The drive may also be installed in a stand-alone cabinet. In this case, it is advisable that a removable cover is introduced above the cartridge holder to prevent entry of dust into the recording area. See also Vol. X Installation.

The drive may be installed in a standard rack.

X1215/16 (ABOVE SERIAL NUMBER 2000)

Cartridge Disk Drive Unit

Vol. VII: Maintenance



Data
Systems

1.1 GENERAL

The performance of the Cartridge Disk Drive depends on a carefully planned and properly executed program of preventive and corrective maintenance.
The program, if fillowed, will ensure optimal performance and maximim 'device up' time.
The scheduled maintenance of the device is based on hours, indicated by the elapsed-time meter which can only be viewed from the rear, and on normal office environment on a one shift base an abnormally dirty environment may dictate increased preventive maintenance.
Three levels of scheduled maintenance exist:

a) 1000-Hour or six month scheduled maintenance
b) 2000-Hour or 12 month scheduled maintenance
c) 4000-Hout or 24 month scheduled maintenance.

However, it is advisable to perform a maintenance check the first 500 hours of three months.

1.2 SPECIAL TOOLS

Drive belt adjustment tool.
Disc Exerciser XMX1418
Extender board
Jumper wires
C.E. cartridge XMX1419
Head removal and replacement tool
Head alignment and adjustment tool
Torque wrench 7 kg/cm (M3 socket screw)
Berg handtool HT-80
C.E. write protect plug
Index unit adjustment tool
Optical zero adjustment tool
Tool case
Fault indicator 3L54 (if not installed)
Sector pick up adjustment tool
Meander block adjustment tool
P.C.B.A 2L28 (SMS1418)
P.C.B.A 2L29 (XMX1418)
Bit 2.5 mm HEX.

1.3. MATERIALS

Isopropyl alcohol	1322 505 69201
Wad tip-Q-sticks	5122 010 20921
Lint-free dry clotch (Scotch wiper)	5122 010 20911
CAB foil 0.08 mm	
Wooden spatulas	2822 060 15456
Drive belt	
Earth contact lubrication	

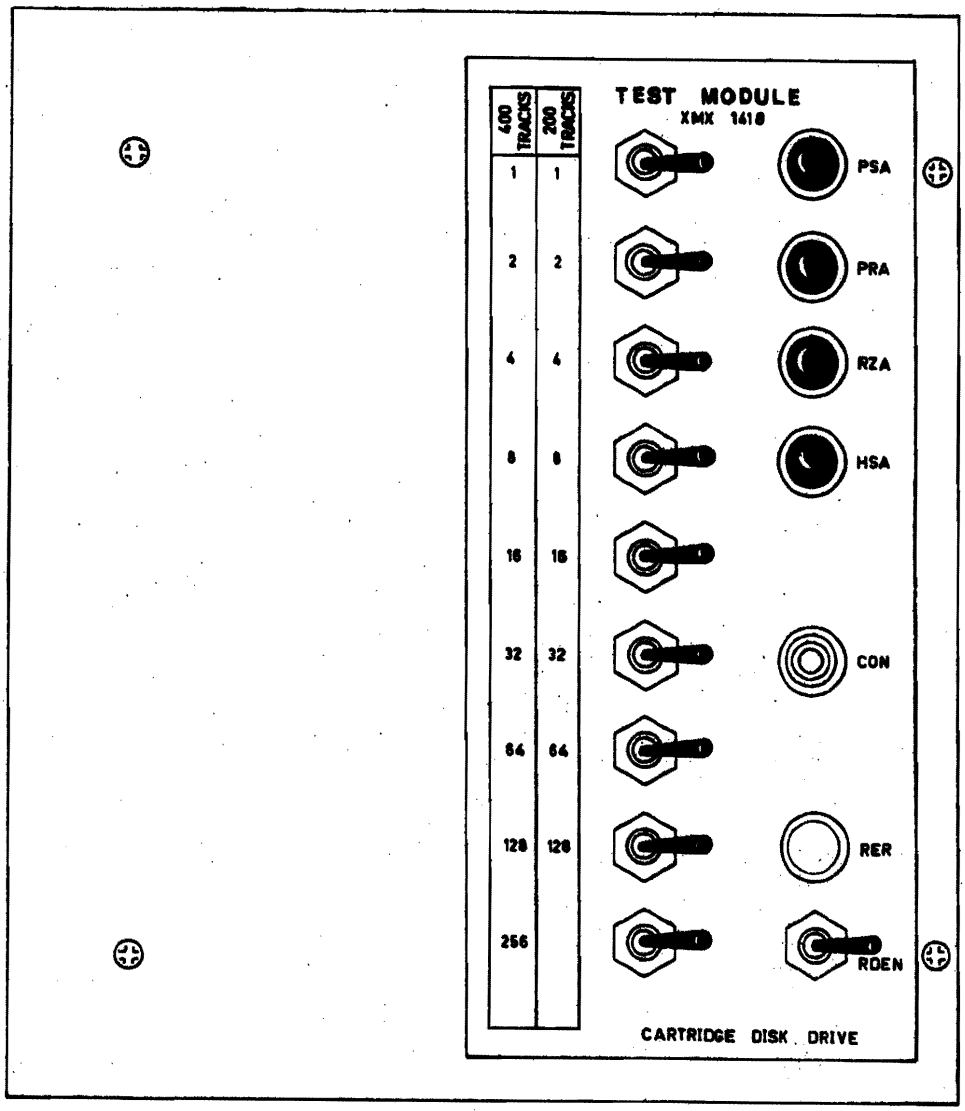
TEST MODULE
XMX 1418
400 TRACKS
200 TRACKS
1
1
2
2
4
4
8
8
16
16
32
32
64
64
128
128
256
PSA
PRA
RZA
HSA
CON
RER
RDEN
CARTRIDGE DISK DRIVE

Figure 7-1

1.4. EXERCISER fig. 7-1

The Exerciser is provided for use a service engineer to enable him to instruct the CDD, in moving the heads to a selected cylinder address, or between two selected cylinder adddresses,to select one of the four heads, to make a read enable.

Switches and Indicators

The left row consists of nine toggle switches known as track-switches which are identified 1,2, 4, 8, 16, 32, 64, 128 for 200 tracks and 1, 2, 4, 8, 16, 32, 64, 128, 256 for 400 tracks.
The right row consists of 4 push buttons, two indicators, and one toggle switch.
The four push buttons are identified by.
PSA : Position Single activated

PRA : Position Repeat activated

RZA : Return to zero activated

HSA : Head Select activated

The two indicators are identified by CON : ON cylinder

RER : Recoverable seek Error

And the toggle switch is called
RDEN : Read enable

Use of the Exerciser

1.Connect the plug of the test module to interface socket of the CDD.

2.Switch on the power at the rear of the disk unit, the cartridge exchange lamp and power on are lit, and insert the cartridge into the correct position.

3.Press the Start/Stop button.

4.Wait until the Unit Ready indicator is lit.

5.The unit is ready to accept signals from the test module.

1.5 EXERCISER operation

a. Direct seek.

1. Set cylinder address in switches
2. Press the button PSA, the positioner moves to the selected address.

b. Return to zero seek.

1. Press the button RZA, the positioner moves to cylinder zero.

c. Repeat.

1. Set first cylinder address on switches.
2. Press button PSA, the positioner moves to the desired address.
3. Set second cylinder address on switches.
4. Press button PRA, the positioner moves now repeatedly between the selected cylinder address.
5. To stop the positioner, press PRA and the positioner will stop on the first cylinder address or on cylinder zero.

d. Head selection.

Set in the two left switches (1 and 2) the number of the selected head. (sec. below)

Switch 1	Switch 2	Head
left	left	0 UHC
right	left	1 LHC
left	right	2 UHC
right	right	3 LHF

Press button HSA, the selected head will now read, the information, of the track on which the positioner was send, before the head selection.
When the toggle switch RDEN is active it is possible to test the whole read channel up till the interface.

2.1 SCHEDULED MAINTENANCE (1000 hours and FIRST 500 hours)

Engineer : Installation :

Data : Unit serial number:

Work time : Running time meter:

Use Maintenance book no. 5122 992 01061	Page	Tech. tip	Result
1. Inspect the heads. Use a dental mirror and a bright light. If a head has been repeadtedly contacting a surface, it must be replaced. Do not touch the heads with the mirror.			
2. CLEAN THE HEADS WITH A SPATULE WRAPPED IN A SCOTCH WIPER DAMPENED WITH ISOPROPYL ALCOHOL (1322 505 69201). USE A DRY WIPER TO DRY THE HEADS.			
3. Clean the cartridge holder. A lint free dust cloth must be used. The cartridge should fit easily in position. Ensure that no loose particles are left behind when the cleaning has been completed.			
4. Check the cleaning brushes. If there are less than 10 bristles per bruch, change the brush assembly. Was it necessary to change it?			yes/no
5. Inspect the spindle motor drive belt. Was the drive belt worn? Was the drive belt slack? (If necessary adjust it.)			yes/no yes/no
6. Inspect and clean the positioner. Are the rollers and guides clean? If not, clean with a dry Scotch wiper.			yes/no
7. Clean the magnetic chuck and spindle cone with a Scotch wiper and alcohol. Use adhesive tape to pick up any loose particles.			
8. REPLACE THE FINE AND COARSE FILTER (ONLY FOR 1000 HOURS SCHEDULED MAINTENANCE). Caution: When fitting the fine filter, make sure that the air flow is in the correct direction (watch the arrow) and do not remove the packing earlier than necessary.			
9. Check the steel wire with which the clamps retracts the brushes.			
10. Run the test program. Program executed.			yes/no
Note: It is recommended to clean the cone locating hole of the cartridges with a Q-stick.			

2.2. SCHEDULED MAINTENANCE (2000 hours and 4000 hours)

Engineer :

Data :

Work time:

Installation :

Unit serial number:

Running time meter:

Use Maintenance book no. 5122 992 01061	Pag.	Tech tip	Result
1. Inspect the heads. Use a dental mirror and a bright light. If a head has been repeatedly contacting a surface, it must be replaced. Do not **touch the heads** with the mirror.			
2. CLEAN THE HEADS WITH A SPATULE WRAPPED IN A SCOTCH WIPER DAMPENED WITH ISOPROPYL ALCOHOL (1322 505 69201). USE A DRY WIPER TO DRY THE HEADS. Do not touch or breathe on the heads. Do not soak the heads with excess Isopropyl alcohol.			
3. Clean the cartridge holder. A lintfree dust clotch must be usod. The cartridge should fit easily in position. Ensure that no loose particles are left behind when the cleaning has been completed.			
4. Check the cleaning brushes. If there are less than 10 bristles per brush, change the brush assembly. Was it necessary to change it?			yes/no
5. Replace the spindle motor drive belt (only for the 4000 or two years maintenance).			
6. Replace the spindle earthing contact.			
7. Inspect and clean the positioner. Are the rollers and guides clean? If not, clean with a dry Scotch wiper.			yes/no
8. Clean the magnetic chuck and spindle cone with a Scotch wiper and alcohol. Use adhesive tape to pick up any loose particles.			
9. Replace the fine and coarse filters. Caution: When fitting the fine filter make sure that the airflow is in the correct direction (watch the arrow). Do not remove the packing earlier than necessary.			
10. Check the steel wire with which the clamps retracts the brushes.			
11. Check R/WR head alignment on CYL 73 (146). Was the adjustment O.K.? Use the write protect card. Record it in the Interchangeability list.			yes/no yes/no
12. Check index to burst adjustment on CYL 5. Record it in the Interchangeability list. Was the adjustment within the limits 18.8 sec $\pm$ 2/usec?			yes/no
13. Run the test program. Program executed.			yes/no

General.

The adjustment neccessary to ensure the satisfactory functioning of the Cartridge Disk Drive (CDD) are described in this section. When an item has been replaced, an adjustment is nearly always nececessary so section 4 of this volume should be used in conjunction with this section.
It should be noted that no supply voltage adjustments can be performed.
A multimeter (type PM 2411/04), an oscilloscope (type PM 3250 or 3330), and a Servo Test Card are required.

3.1 MICRO-SWITCHES

The following micro-switch do not require adjustment:

a) The two clamp switches.

3.1.1 Cleaning Cycle Micro-switch Adjustment.

The adjustment of the rest position of the cleaning brushes can be performed by turning the cam situated on the brush arm. The cam must be turned so that the micro-switch contacts open at the moment the brushes move outside the cartridge holder ring.
The arm, with its associated brushes, can be turned by hand.
A multimeter must be connected across the normally closed contacts to check the micro-swith action.

3.1.2 Retracted switch adjustment (Figure 7-2)

CAUTION : DO NOT MOVE POSITIONER TO MUCH FORWARD SO THAT THE HEADS BECOME LOADED

1) Remove the fuses F5 and F6 from the + 35V and -35V on the driver print.

2) Connect the multimeter to pin 57 of card SS (signal RETA) and earth.

3) Switch Power On.

4) Move the positioner by <u>hand</u> slowly towards track 000 until signal RETA is logic "1".

5) Check at this point whether the zero indication of the vernier is 1mm ± 1/2 mm at the left of the "R"-indication on the ruler.
If necessary re-position the retracted switch.

6) Check if the positioner can be moved between the RETA-setting and the mechanical stop for at least 5mm.

7) Switch power off and replace the fuses F5 and F6.

8) Switch power on and check that there is no current through the positioning coil by moving the positioner between the retracted position and track 000.

9) Switch power off.

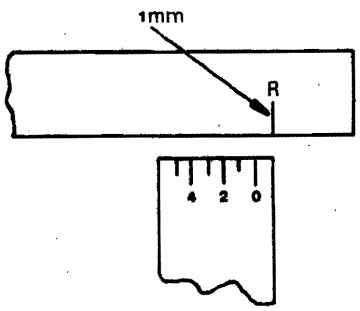

Figure 7-2

3.2 Y-DIRECTION MEANDER BLOCK (Figure 7-3, 7-4).

N.B. When possible this adjustment should be carried out with the heads removed.

3.2.1 Adjustment in Y-direction.

1) Take away the fuses F5 and F6 on the driver card. (Now the voicecoil is disconnected from the +35V and -35V).
2) Loosen the two socket screws G and K.

   A PROTECTIVE SHEET OF 80 /UM APPROXIMATELY CAN BE PLACED BETWEEN THE MEANDERS, THUS PREVENTING THE MEANDERS ARE DAMAGED.
3) Switch the power on.
4) Put a cartridge in the disk unit (only when the heads are not removed).
5) Press the start/stop button and wait until the disks are in nominal speed.
6) Move the positioner inwards by hand so that the primary meander is in front of the secundary meander.
7) Monitor the signal SINX on card SE pin 58 and COSX pin 57. The top to top value of these signals must between 3.8V and 4.2V, when removing the positioner between track 000 and track 200 (400). A second examination is, that the largest top to top value should not be more than 10% of the smallest top to top of the SINX signal.
   When the SINX signal is too large, the distance between primary and secundary meander has to be enlarged, by moving the secundary meander block using the special tool which can be placed in the holes S or E.
   If the signal is too small the distance has to be reduced.
8) Fasten the two screws G and K and repeat point 7.
9) In "retracted" position the off-set of the SINX and COSX signal had to be 0 m V $\pm$ 25.
   Adjust with the potmeters R.6 and R.28 on the meander card.

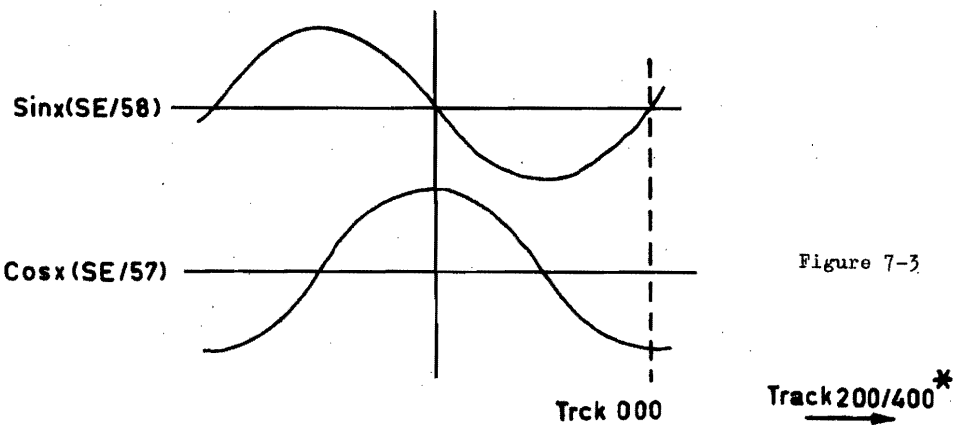

Figure 7-3

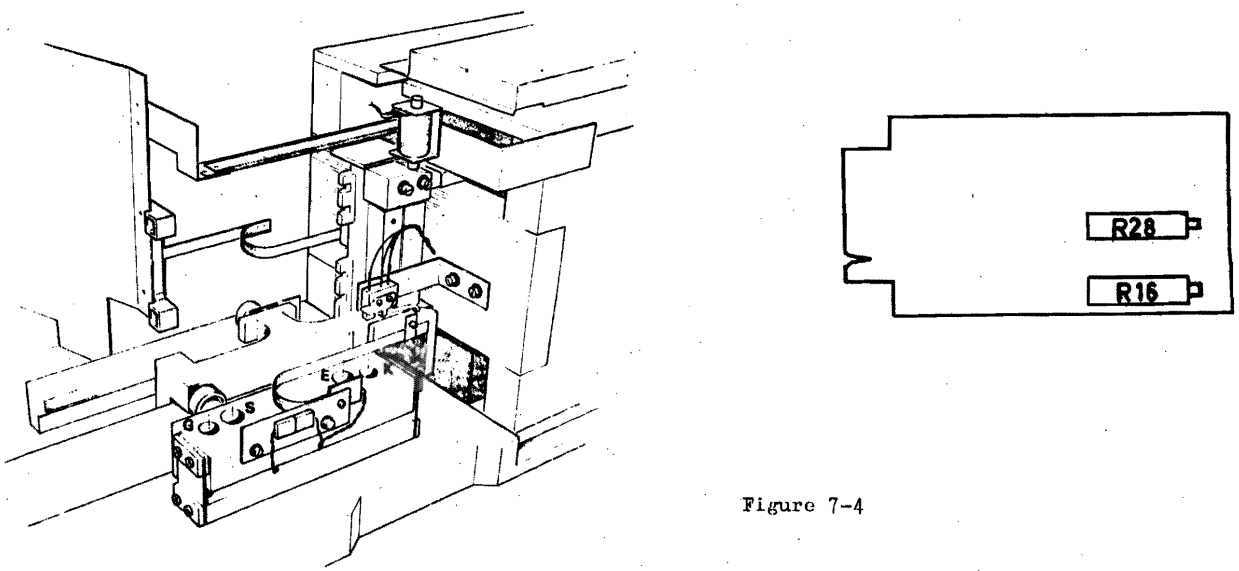

Figure 7-4

3.3 ADJUSTMENT OF THE MEANDER CARD POTENTIOMETERS

a) Switch the power on.
b) Make sure the positioner is in the retracted position.
c) Measure between pin 58 of card SE (signal SINX) and earth. The voltage difference has to be less than 50 mV. If it is not, turn the potentiometer R16 until it is less than 50 mV.
d) Do the same for COSX signal, pin 57 of card SE (potmeter R28)
Potentiometers R16 and R28 are situated at the meander card.

3.4 OPTICAL ZERO ADJUSTMENT (Figure 7-5)

a) Execute point a, b, c, d, e of 3.2.
b) Monitor the signals OPZ (card CUP pin 24) and A0 (card SE pin 35).
c) Move the positioner from track 200 to track 000. In the vicinity of track 000 the signal OPZ becomes a "1", when the front side of the vane reaches the optical zero tranducer. By moving the optical zero unit the figure below has to be completed.

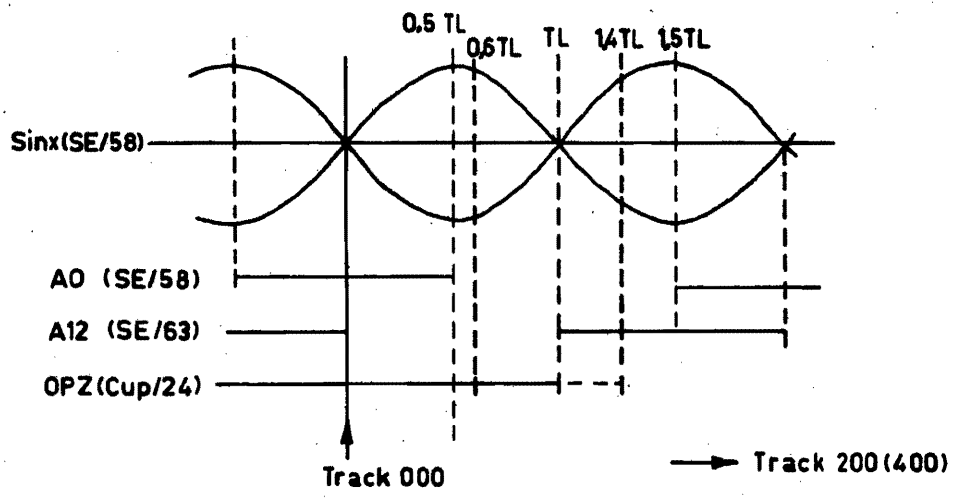

Figure 7-5

3.5 POSITIONING SPEED ADJUSTMENT

Starting with this adjustment, the meander signals, 'optical zero', index pulses of the cartridge and the fixed disk must be correct.
All cards must be installed. For location of the potentiometers, see fig. 7-6.

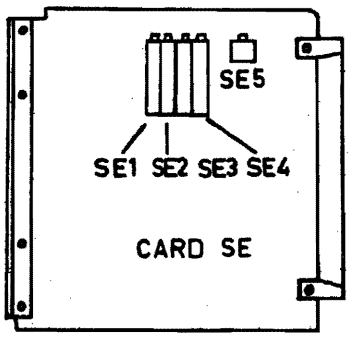

Figure 7-6

1) Turn the potmeters SE1 and SE2 fully CW and then 5 turns CCW.
2) Turn potmeter SE4 (tS) fully CCW then ca. 4 turn CW.
3) Turn potmeter SE3 (max. speed) fully CCW. The speed is now minimal.
4) Connect one probe of an oscilloscope to pin 29 of card SE the ("off set" of the speed signal) the positioner is in the retracted position. The "off set" must be $\leq$ 20 mV. If not adjust with potmeter SE5.
5) Connect pin 11/CUP (signal $\overline{\text{BPDA}}$) to pin 04/CUP (ground).
6) Place a cartridge in the machine and start.
7) After 60 sec. the positioner starts with the first seek.
When the positioner is unsteady during the first week (whistle) turn SE4 another half a turn CW.
8) By means of the exerciser, do a repeat seek between track 64 and 128. (128-256).
Connect a trigger probe of the oscilloscope on signal $\overline{\text{EC}}$ pin 13 of card DC. Trigger the scope extern neg.
Connect probe A on pin 31 of card PA (positioner current).
Connect probe B on pin 29 of card SE (speed signal).
9) Turn potmeter SE3 CW (speed is increased) till the current is correct, see fig. 7-7 with dus regard to on point 11.
When the speed becomes higher turn SE 4 CW till it is correct, see fig. 7-9.

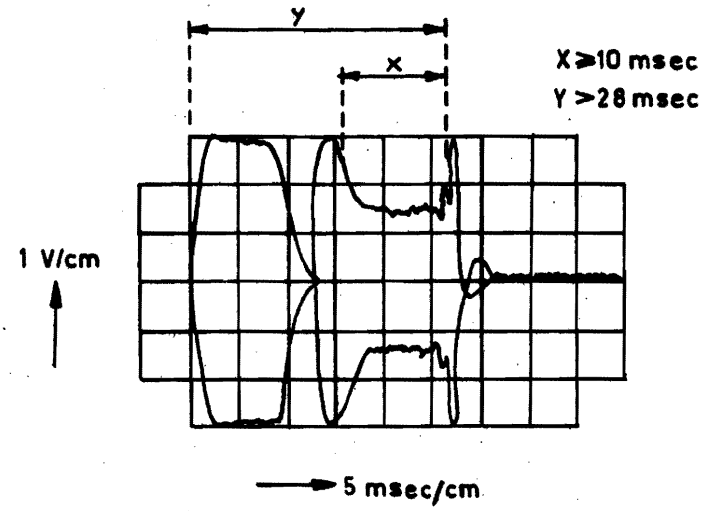

Figure 7-7

The current should not be limited, in the regulated area.
If it is limited turn the potmeter SE3, CCW. Figure 7-8

10. Repeat point 9 but now between track 0 and 64 (128) and between track 128 (256) and 192 (384) with due regard to point 11.

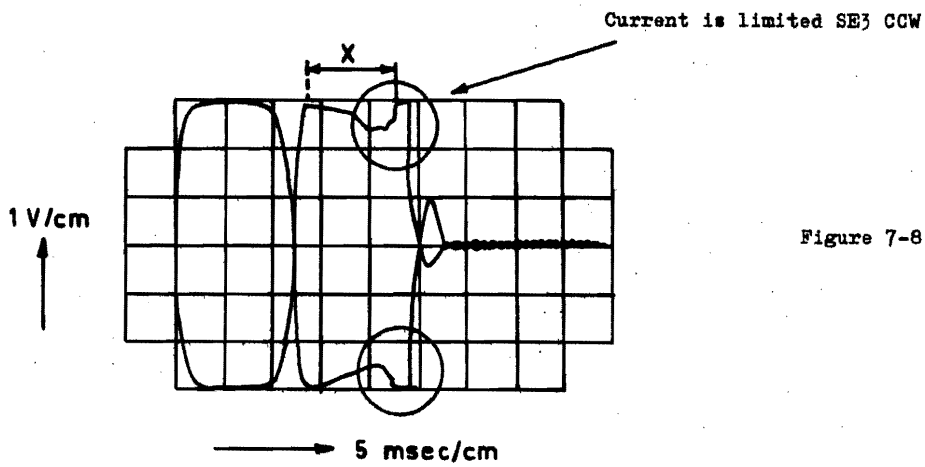

Figure 7-8

11. Now trigger the scope pos on sign. $\overline{EC}$, pin 13 of card DC.
Connect channel B on pin 29 of card SE (speed signal).
Measure the speed of incidence.
This must be between 10 and 13 cm/sec. This agrees with a voltage of 400-450 mV.
The fig. 7-9 gives the correct pattern, A1 and A2 must be 400-450 mV.
If it is not correct turn potmeter SE4.
(CC W bigger and C.W smaller).

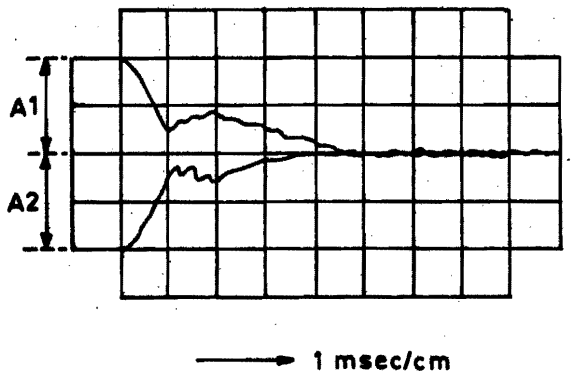

Figure 7-9

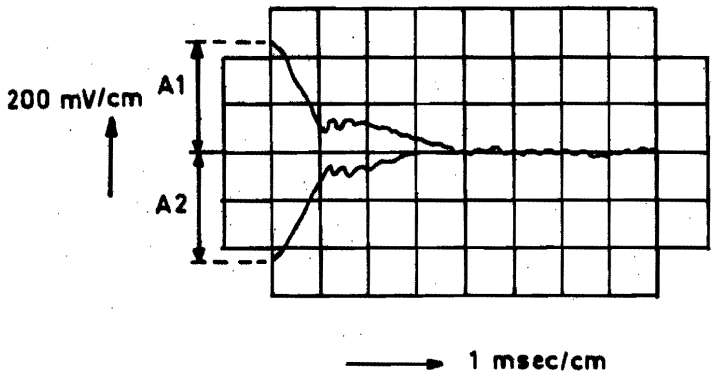

Figure 7-10

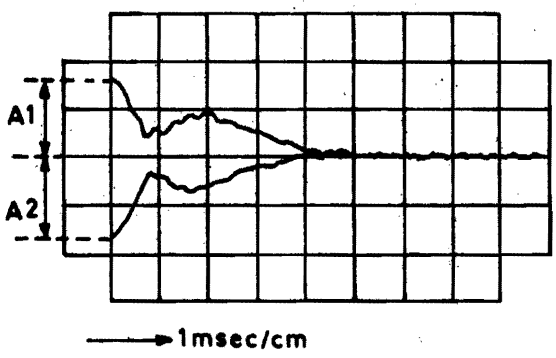

Speed to low

Figure 7-11

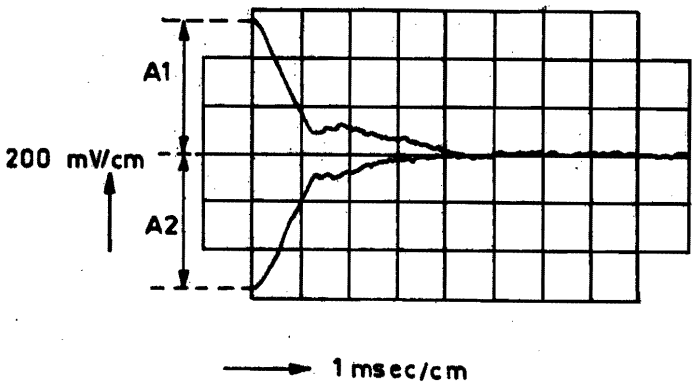

Speed to high

Figure 7-12

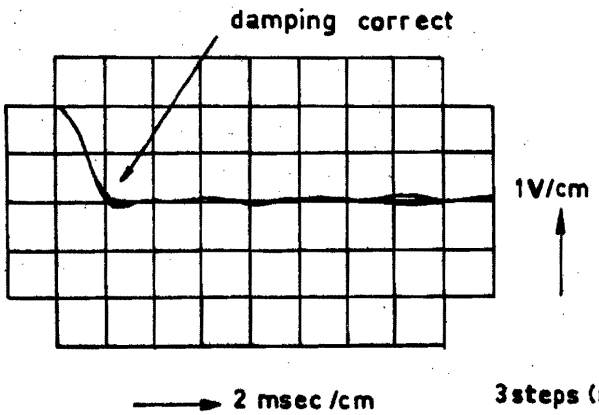

Figure 7-13

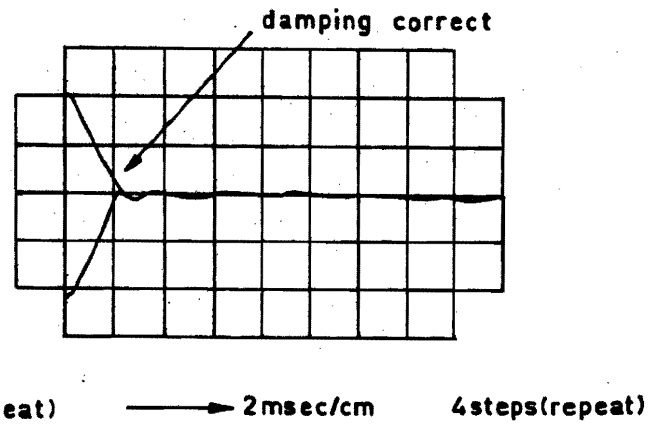

Figure 7-14

When the potmeter SE4 makes the slope too steep, the place position loop can become unstable, fig. 7-15
turn potmeter SE2 CW

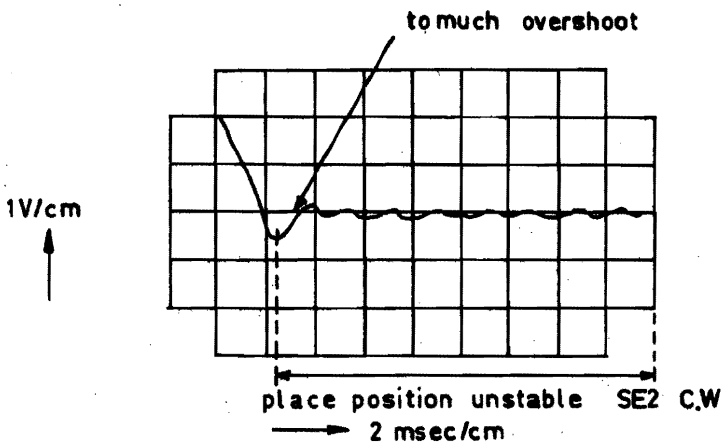

Figure 7-15

The polarity of the signal is dependent on the direction in which, and the polarity from where will be positioned.

The fig. 7-16, 7-17, 7-18, 7-19 show examples of an incorrect adjusted position loop.

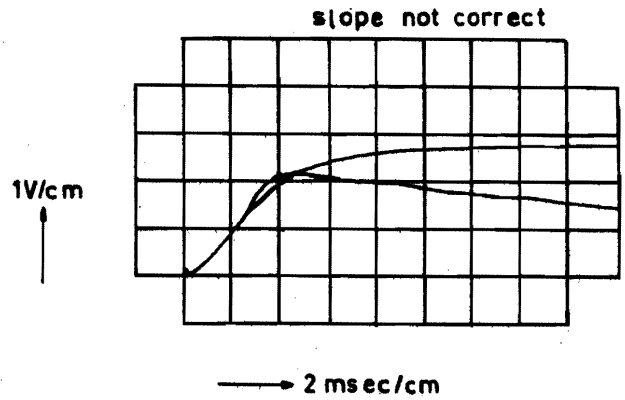

Figure 7-16

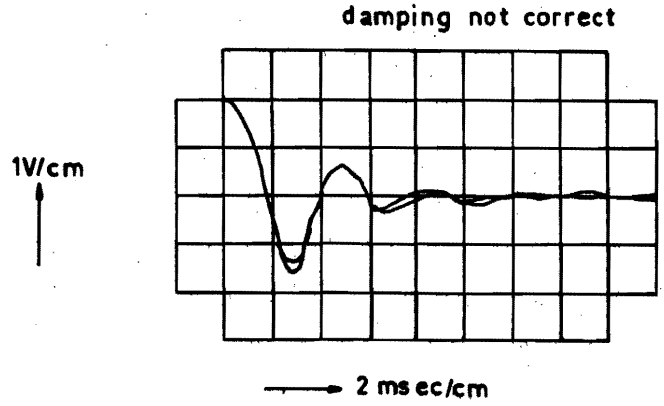

Figure 7-17

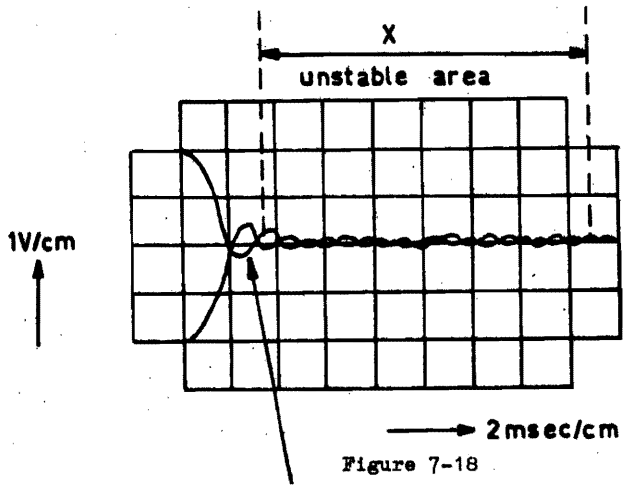

Figure 7-18

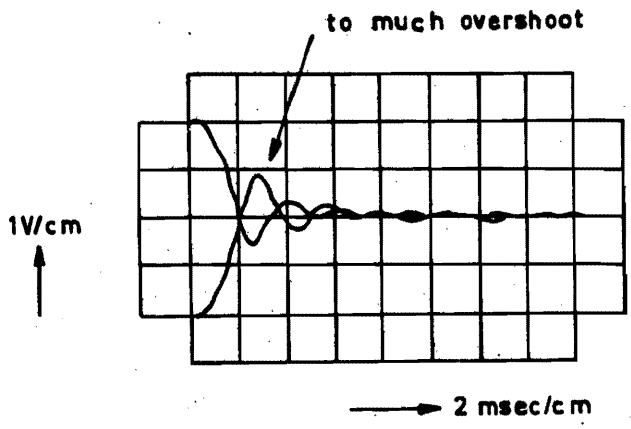

Figure 7-19

In figures 7-18 and 7-19 positioning is over one step. The slope is too steep(SE2) so the area x becomes unstable.
Also SE1 is not adjusted correctly, turn SE2 C.W., then adjust the correct damping with SE1.

12) Check again on channel A of the scope the positioner current see point 8,9, 0. When it is necessary adjust with SE3, and do point 11 again.

13) Trigger scope pos on signal $\overline{EC}$ DC/13.
Correct channel A on signal SCX pin 54 card SE.
By turning the potmeters SE1 and SE2 the place of the adjusting.
Position over 3 and 4 steps forward/reverse in the neighbourhood of track 3-64-128 and 192.(6-128-256-384)

14) By adjusting SE1 and SE2 in turn, a correct place position loop will be obtained. The slope wil be adjusted by turning SE2 (TX).
CCW means steeper an CW means shallower.
By SE1 (Kspf) the overshoot is adjusted CCW means more damping (less overshoot), CW means less damping.
The figures 7-13 and 7-14 shows the correct adjustment for respectively three and four steps, from the areas mentioned in point 13.

15) Start positioning over the next distance, and check the incidence shown in fig. 7-13 & 7-14 for scope adjustment see point 13.
Positioning from cylinder X to cylinder Y forward/reverse (repeat)

X1215 Cylinder X	X1216		X1215 Cylinder Y	X1216
0			1	2
0			2	4
0			8	16
0			32	64
0			64	128
32	64		33	66
32	64		34	68
32	64		40	80
32	64		64	128
32	64		96	192
64	128		65	130
64	128		66	132
64	128		72	144
64	128		96	192
64	128		128	256
128	256		129	257
128	256		130	260
128	256		136	272
128	256		160	380
128	256		192	384
192	384		193	385
192	384		194	386
192	384		200	400

16. Do point 15 again, with the following scope connections.
    Trigger the scope positive, extern to signal $\overline{EC}$ pin 13 of card DC.
    Connect channel A to signal WTC pin 22 of card CUP, and channel B to signal $\overline{PONC}$ pin 06 of card CUP.
    In all the areas, the signal WTC must stay a '1' after signal $\overline{PONC}$ goes to a '0', (seek error).
    The relationship between WTC and $\overline{PONC}$ is shown in fig. 7-20.
    The time T must be at least 1 msec.

Figure 7-20

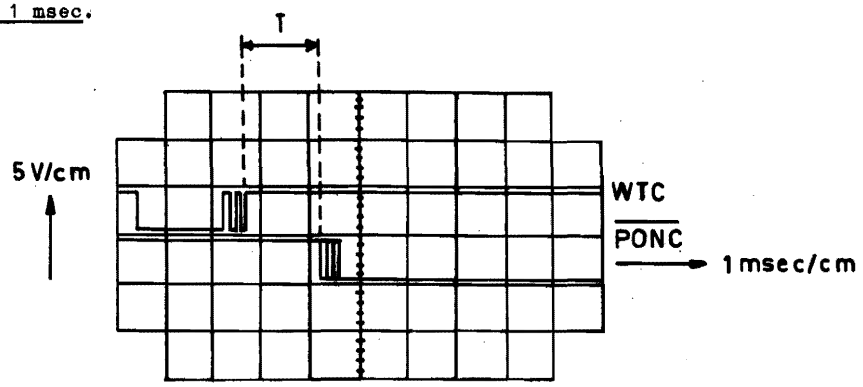

Fig. 7-21 shows an incorrect situation, the place position loop must be adjusted again, starting with point 12.

Figure 7-21

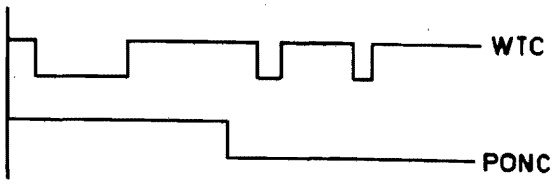

17. AFTER THE CORRECT ADJUSTMENTS? TURN POTMETER SE 3 ¼ REVOLUTION CCW.

3.6 ADJUSTMENT OF HEADS 0 AND 1 AND THE INDEX UNIT. (Figure 7-22)

The adjustment of the heads and the index unit must be done with the aid of a CE cartridge, which should stabilize at the disk drive ambient temperature for at least 2 hours.
Also the torque tool, the adjustment tools and the CE-plug must be used.

1. Remove plug P8 on the backpanel, insert the CE-plug, and replace plug P8.
2. Turn the spindle by hand in the position, that the red point on the spindle is in front with the index unit protection cap of the bottom plate Rotate the CE- disk in the cartridge in such amanner, that the index slot is in front with the cap.
3. Insert the CE- cartridge.
4. Push power on and then start.
   Wait 30 minutes.
5. Connect the signal $\overline{BPDA}$ pin 11/CUP to the ground.
6. Connect channel A of the scope to test pin on the R/w card.
7. Connect channel B of the scope to pin 21/SS and trigger intern, positive at the same signal (index pulse fixed disk) time base 2.5 msec/cm.
8. Position the heads to track 073 (146) by means of the test case.
9. Select head 0.
10. Adjust head 0 as shown in fig. 7-18.
    The centre zero must be ± 0,4 cm.

Figure 7-22

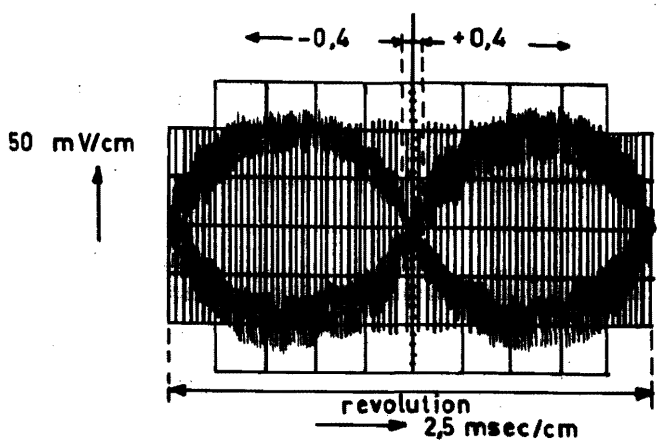

11. Repeat step 9 for the head 1.
12. Switch the time base calibration again to normal, and set base to 5 /u sec/cm, using pos triggering like step 5.
13. Positioning to track 005. (010)
14. Select head 0.
15. Adjust the index.
16. Select head 1.
17. Repeat step 14.
18. When steps 14 and 16 have a different value, take the average deviation, in such a way that T = 20 msec ± 3 /u sec, see fig. 7-23 as well head 0 as head 1.

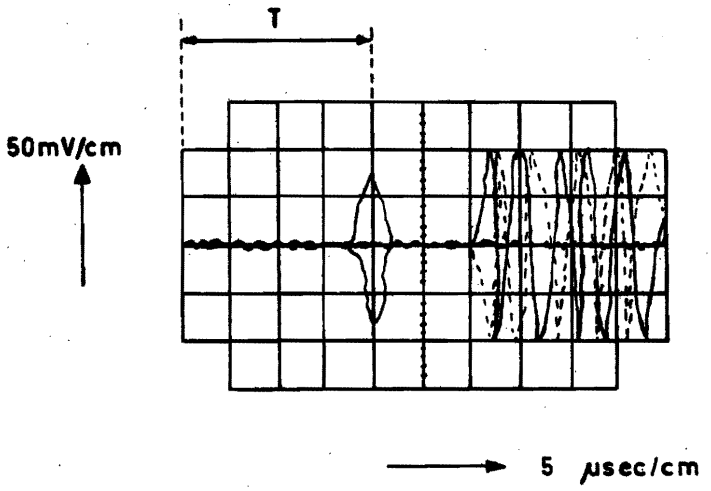

Figure 7-23

3.7. ADJUSTMENT OF THE INDEX UNIT (CARTRIDGE)

1. Insert a cartridge with small slots in the sectorring.
2. Connect channel A of the oscilloscope with pin 12 of card DBC (IC2) and trigger intern neg.
3. Start the unit
4. Check if the signal in the oscilloscope is the same as fig. 7-24

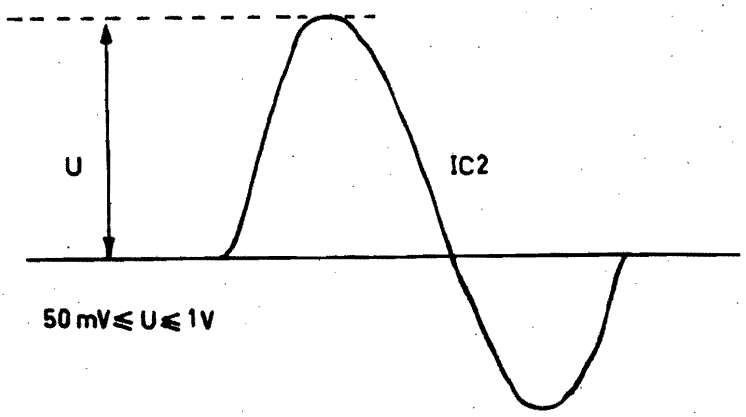

Figure 7-24

5. Stop the unit
6. Insert a cartridge with wide slots.
7. Do the same check again.

3.8 ADJUSTMENT OF THE INDEX UNIT (FIXED DISK)

1. Connect channel A of the oscilloscope with pin 17 of card PA (IF1) trigger intern neg.
2. Start the unit.
3. Check if the signal on the oscilloscope is the same as fig. 7-25

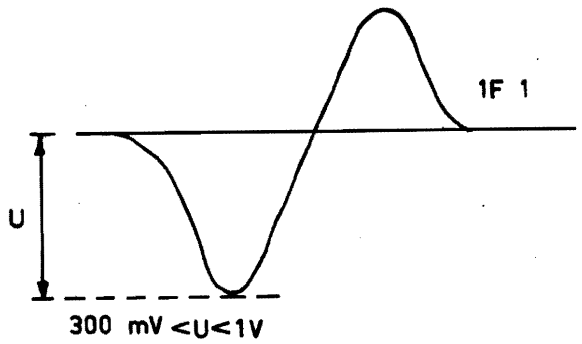

Figure 7-25

3.9 ADJUSTMENT TEMP. COMPENSATION (ONLY FOR X1216)

The Unit is in operation but the temp. compensation is swtiched off by grounding LAT/43.

1. Remove connection on card LAT/43 to ground.
2. Measure on LAT/44 resp. 39 ground potential.
3. Measure on LAT/34 resp. 36 about - 3,5 V.
4. Measure on T.P. 1 on LAT an offset voltage, adjust this voltage with the potentiometer LAT 1 course on 0 mV
5. Heat the cartridge diodes by hand, the offset-voltage goes "negative".
6. Install a cartridge.
7. Position by means of the test case from track 000 to track 064.
8. Measure by means of an oscilloscope signal RCON on card LAT/10 and signal SCX on card SE/54. Trigger on DC/13, and check the slope.
9. Turn the potmeter LAT 1 in such a way that signal SCX is a positive respective a negative pulse. The signal RCON became now 4 m sec. longer.
10. Keep e.g. the pos pulse.
11. Select head 2 resp. head 3. The extra pulse on SCX disappears.
12. Select now head 0 resp. head 1. Pulse on SCX appears.
13. Turn the potmeter on card LAT till the pulse on SCX is disappeared.
14. Install the CE cartridge and the CE plug P8.
15. Take out TP1 on card LAT by means of a wire outside the case to measure the off-set voltage.
16. Operate for one hour with covered cabinet.
17. Adjust the off-set voltage on TP1 on 0 mV $\pm$ 20 mV.
18. Remove the cover.
19. Adjust as soon as possible (within ten minutes) the heads 0 and 1 on track 146 of the CE cartridge. Take care of the offset, these had to be within $\pm$ 50 m V during this adjustment.
20. Install after this adjustment a "Cold" cartridge and position on track 000, with a difference of zero; on card SE/54 signal SCX you can check the working of the temp. compensation (see point 8).

4.1 INDEX UNIT CARTRIDGE

1. Remove the bottomplate which is above the fixed disk (4 screws).
2. Adjust the height of the index unit sec fig. 7-26.

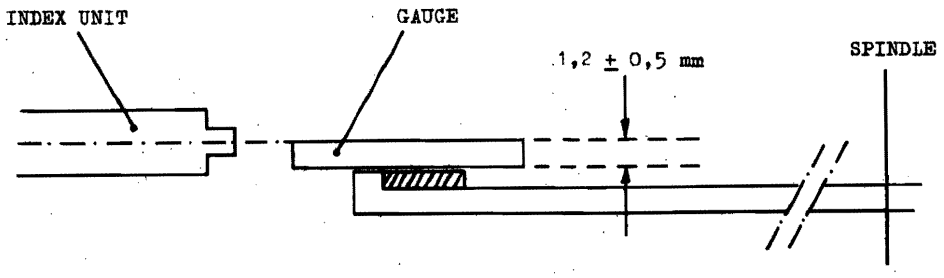

Figure 7-26

3. Loosen the two fixing screws of the index unit.
4. Adjust the index unit with the gauge, so that it is just free.
   See figure 7-27

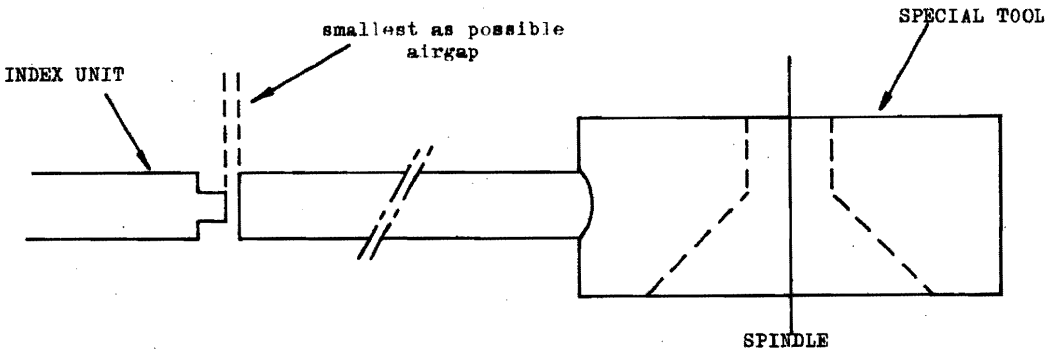

Figure 7-27

5. Tighten the two fixing screws of the index unit.

4.2 INDEX UNIT FIXED DISK

1. Loosen the locknut of the index unit.
2. Adjust the index unit with respect of the sector ring by means of a feeler gauge 0.35 mm.
   See figure 7-28.

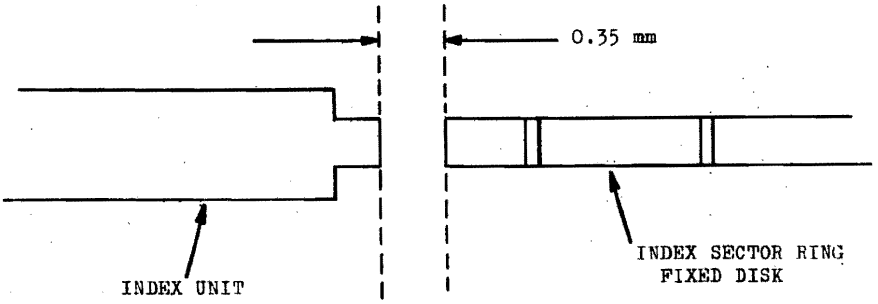

Fig. 7-28

3. Check that the sector ring doesn't touch the index unit.

4.3 RETRACTED SWITCH

1. Loosen the screws of the micro switch and shift it so, that is is activated ± 1 mm before retracted position.
2. Tighten the screws.

4.4 CLEANING THE HEADS

1. Remove rear top cover
2. Clean the heads. Use a spatule wrapped in a scotch wiper dampened with isopropyl alcohol (1322 505 69201) use a dry wiper to dry the heads.
3. Replace the rear top cover.

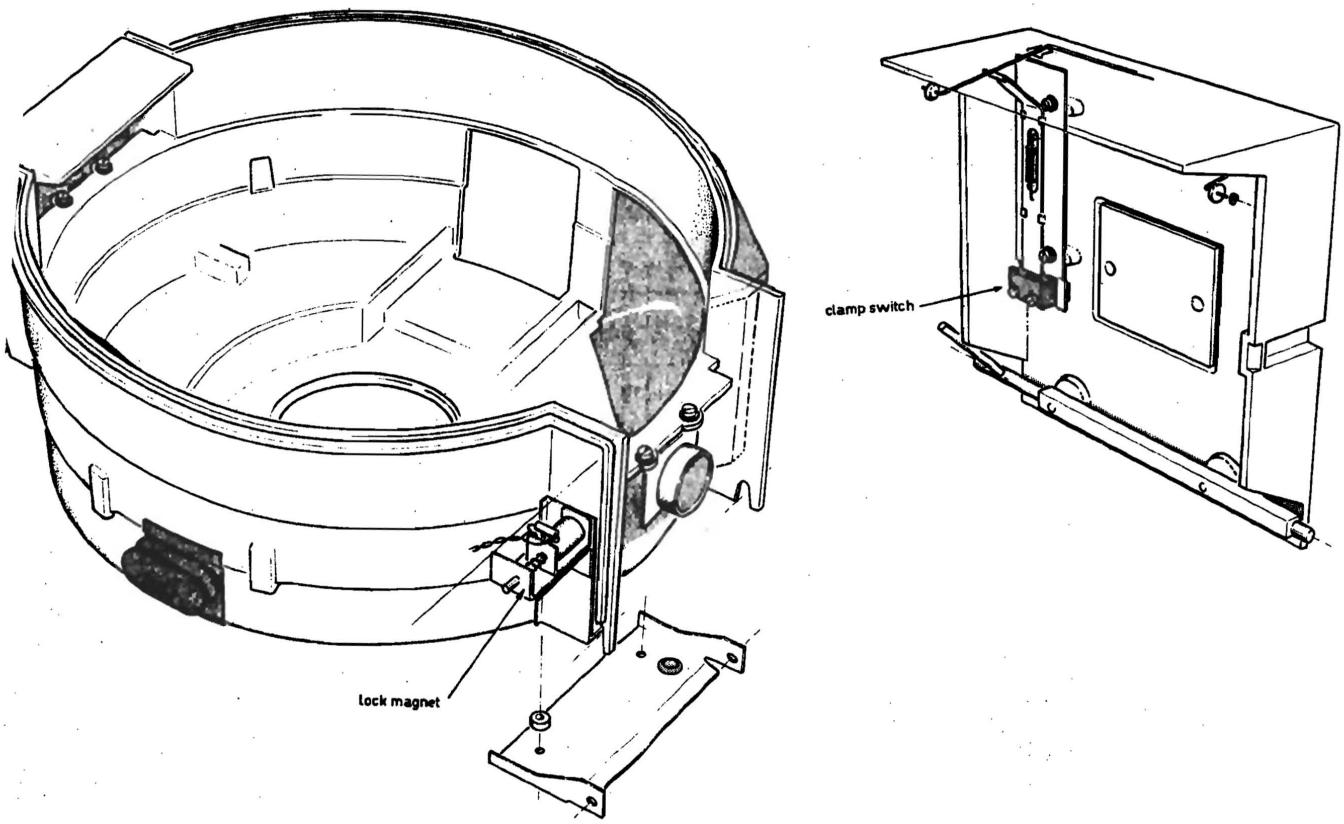

Figure 7-30

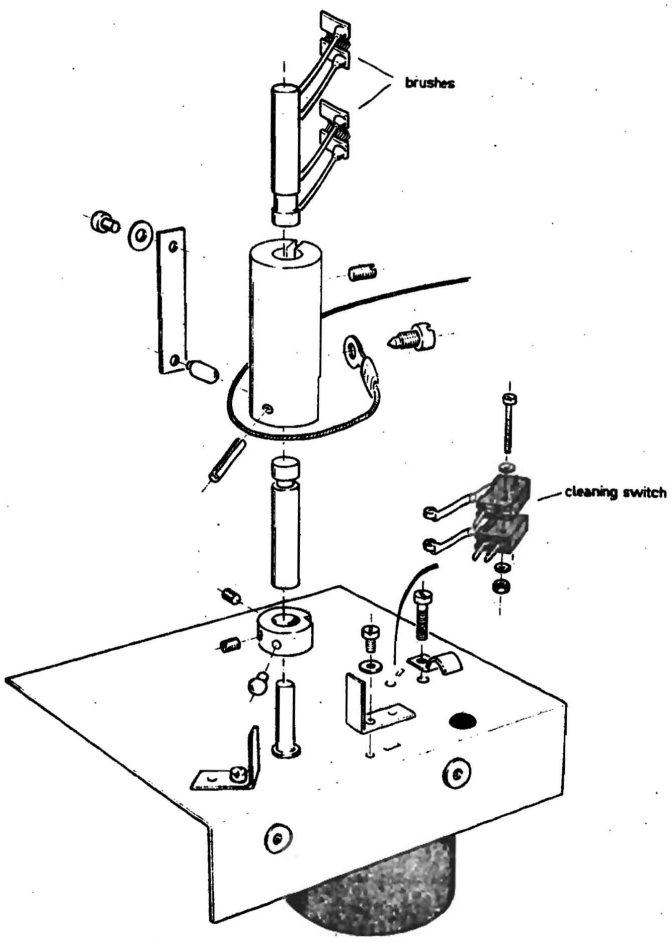

Figure 7-31

5.1 GENERAL

Before replacing any part, switch off the power on the rear.
Be aware of the strong magnetic field of the positioner magnet (watches, tools, measuring equipment).

5.2 AIRFILTERS

5.2.1 Fine filter (figure 7-29)

1. Disconnect connector of front panel (JF-PF)
2. Remove four dixing screws of the frontpanel, remove frontpanel.
3. Take out the fine filter and replace new one; BE SURE OF THE CORRECT AIR FLOW (RED ARROW).
4. Replace frontpanel.
5. Connect JF-PF

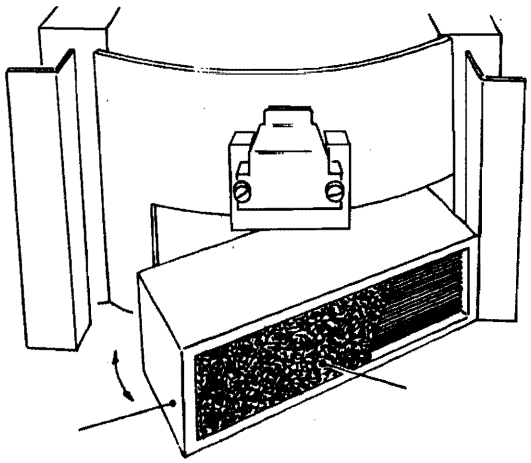

Figure 7-29 FILTERS

5.2.2. Coarse filter

1. The coarse filter can be taken out by hand, out of the fine filter.

5.3 LOCK MAGNET (figure 7-30)

1. Remove front top cover.
2. Remove unit from cartridge holder.
3. Insert new one.
4. Remove wires from the old one and connect to the new one.

5.4 CLAMP SWITCHES (figure 7-30)

When opening or closing right hand clamp switch, pull out the lock magnet pin.

1. Remove top front cover.
2. Remove the clamp on which the switch is situated (2 screws).
3. Take out the micro-switch by loosening the screws.
4. Insert a new one.
5. Connect wires from the old one to the new one in the right order.
6. Insert the clamp.
7. Check working.
8. Replace top front cover.

5.5 CLEANING SWITCH (figure 7-31)

1. Remove rear top cover.
2. Replace micro-switch
3. Remove wires from the defect one and connect in correct order to the new one.
4. Check working.
5. Replace rear top cover.

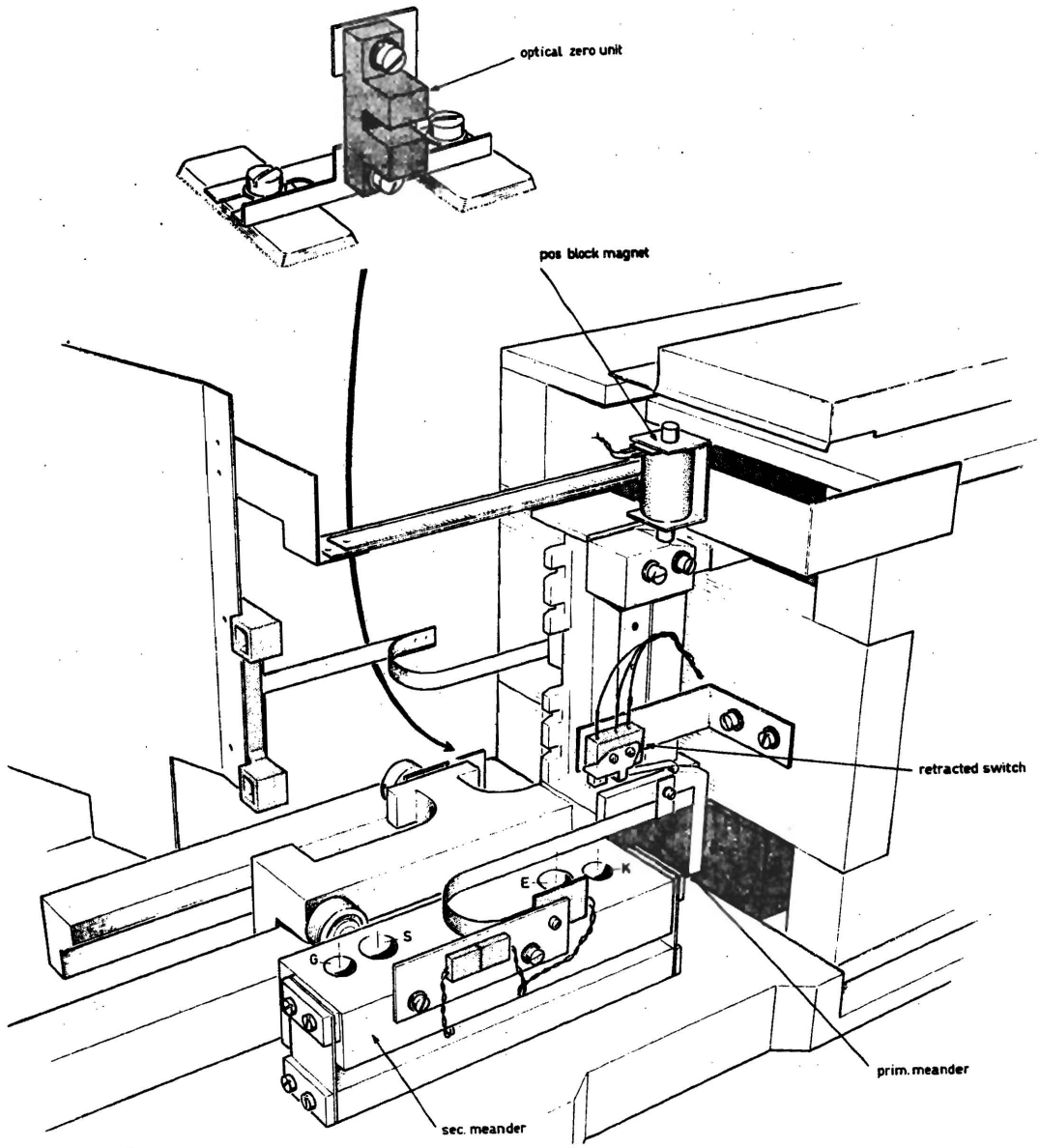

Figure 7-32

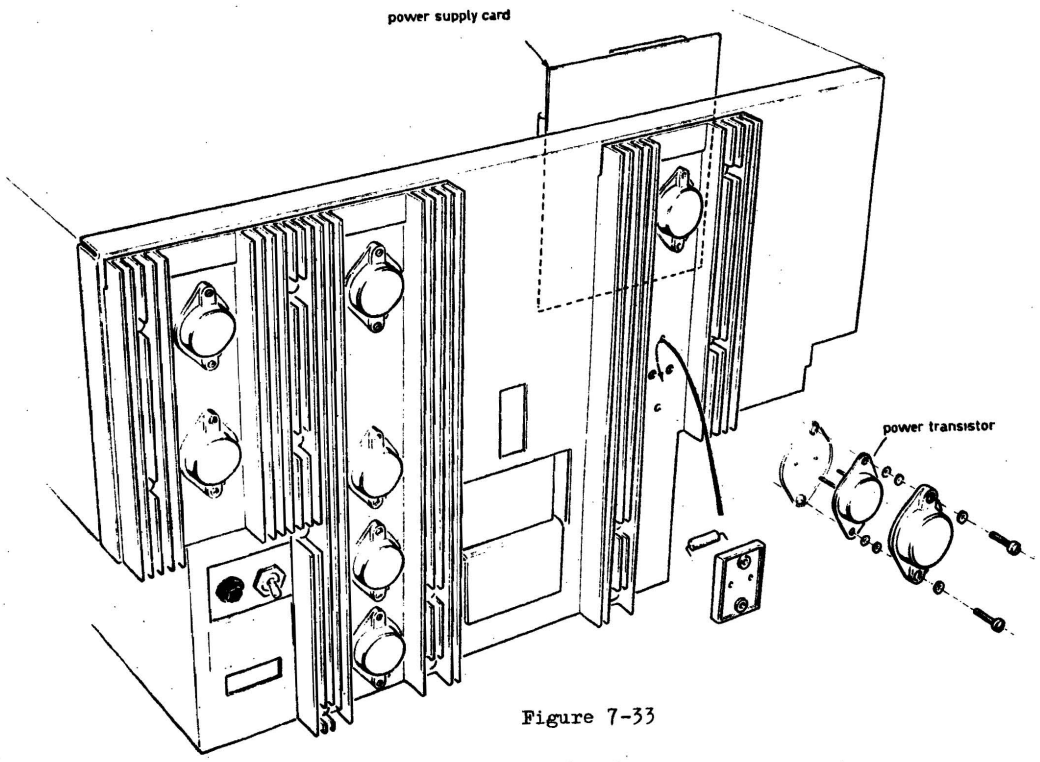

Figure 7-33

5.6 RETRACTED SWITCH (figure 7-32)

1. Remove rear top cover.
2. Pull the positioner to the fully retracted position.
3. Remove the switch and replace a new one.
4. Connect wires to the corresponding pins.
5. Check working and adjust see 4.3.
   CAUTION: DO NOT MOVE POSITIONER TOO MUCH FORWARD SO THAT THE HEADS BECOME LOADED.

5.7 POSITIONER BLOCK MAGNET (figure 7-32)

1. Remove rear top cover.
2. Push the positioner to the fully retracted position.
3. Remove the magnet and replace new one.
   CAUTION: DO NOT MOVE POSITIONER TOO MUCH FORWARD SO THAT THE HEADS BECOME LOADED.
4. Connect wires to the corresponding pins.
5. Check working.
6. Replace rear top cover.

5.8 OPTICAL ZERO UNIT (figure 7-32)

1. Remove rear top cover
2. Disconnect connector JZ-PZ
3. Loose the two screws and remove unit.
4. Remove switch (2 screws)
5. Insert new one.
6. Replace the unit.
7. Connect plug.
8. Adjust OPZ (see 3.4)

5.9 CLEANING BRUSHES (OPTIONAL) (figure 7-31)

1. Remove rear top cover.
2. Remove top of the reversing case.
3. Remove stop in reversing case.
4. Remove brush arm assembly by means of a socket head screw wrench.
5. Disconnect brush retracting cable
6. Install new brushes.
7. Install unit.
8. Adjust position of the cleaning unit (special tool).
9. Check that the brush arms never touch the disk.

5.10 POWER SUPPLY CARD (figure 7-33)

1. Remove rear top cover.
2. Remove connector PV on power card.
3. Remove wires from connecting block.
4. Remove four screws on the rear, holding the power supply card.
5. Replace card.
6. Fit wires in connecting block.
7. Connect plug PV.
8. Check voltage without all cards.
9. Replace rear top cover.

5.11 POWER TRANSISTORS (figure 7-33)

1. Loosen the two screws of the defected transistor.
2. Replace the new transistor. USE A NEW MICA PLATE.

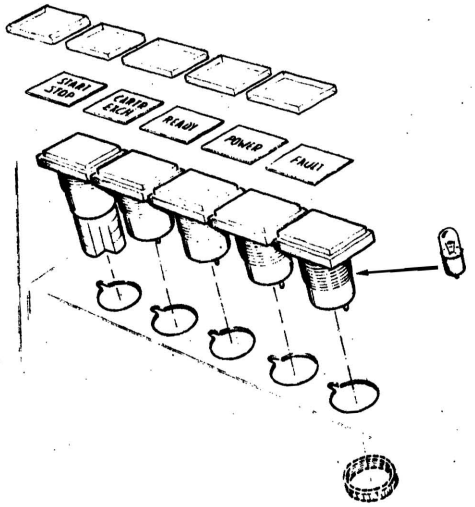

Figure 7-34

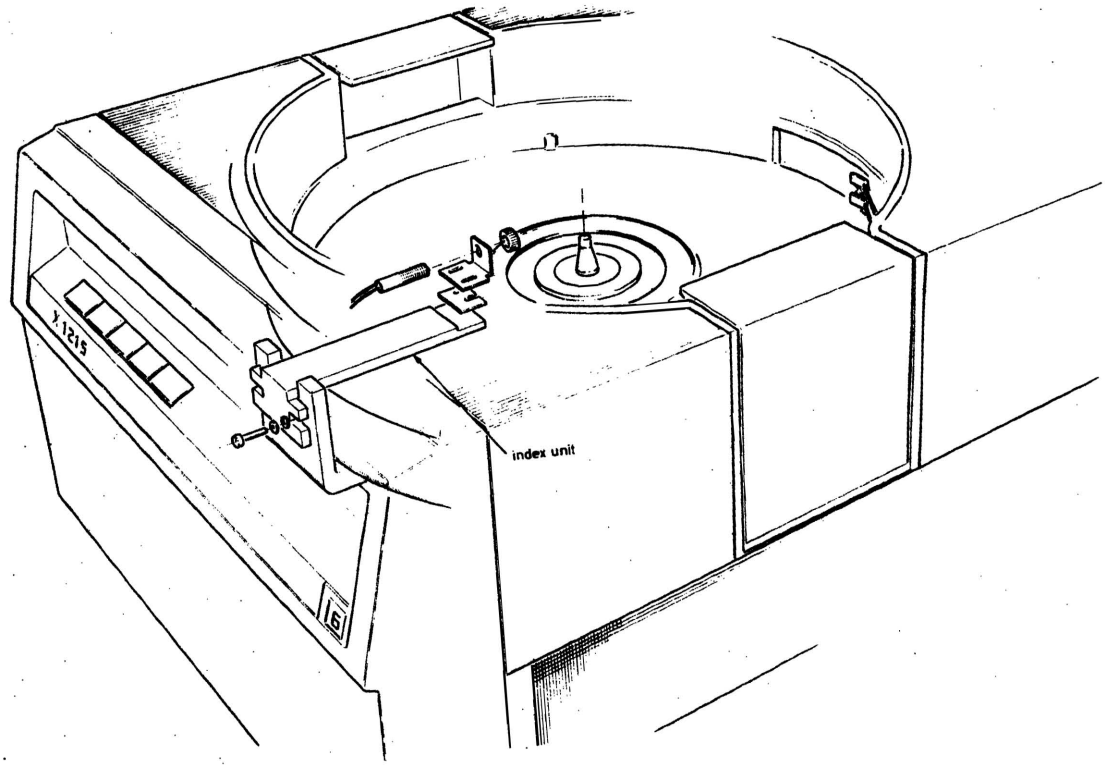

Figure 7-35

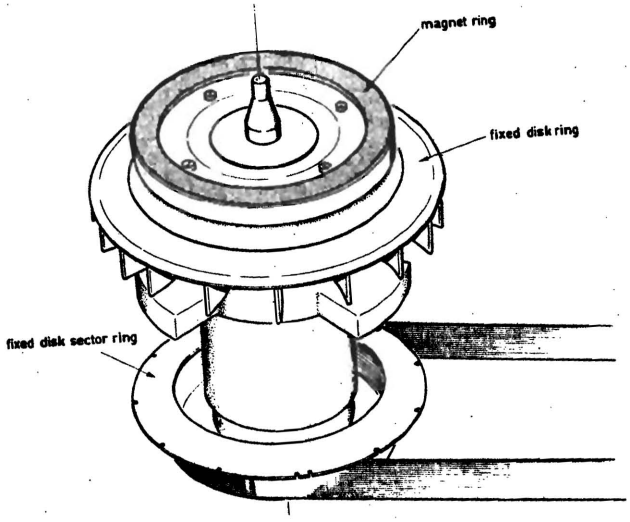

Figure 7-36

X1215/1216

5.12 PUSH BUTTON AND INDICATORS (figure 7-34)

1. Remove front top cover.
2. Disconnect connector of front panel (JF-PF).
3. Remove front panel.
4. Unsolder wires of faulty button/indicator.
5. Take out the button/indicator.
6. Fix new one in position.
7. Solder wires to button/indicator.
8. Fasten front panel.
9. Connect connector (JF-PF).

5.13 LAMP PUSH BUTTON AND INDICATORS (figure 7-34)

1. Disconnect the lenscap.
2. Remove the defective lamp (by means of a tweezer) and replace a new one.
3. Replace lens cap.

5.14 INDEX UNIT CARTRIDGE (figure 7-35)

1. Remove front top cover.
2. Remove front panel.
3. Remove first bottom plate (four screws).
4. Loosen plug PB.
5. Remove index unit.
   CAUTION: Be careful with the fixed disk.
6. Replace the unit by a new one.
7. Connect plug PB.
8. Adjust the unit mechanical (4.1).
9. Replace base plate.
10. Adjust the unit electrical (3.7).

5.15 FIXED DISK (figure 7-35 and 7-36)

1. Remove front top cover, rear top cover and the front panel.
2. Remove first bottom plate (four screws).
3. Loosen index unit support and take it out as far as possible of the cartridge holder.
4. Remove the fixing ring. Be careful with fixed disk.
5. Take out the fixed disk.
6. Replace new one (use gloves).
7. Replace the fixing ring.
8. Place index unit report.
9. Adjust mechanical (4.1).
10. Install first bottom plate.
11. Adjust index unit electrical (3.7).
12. Fix front panel and covers.

5.16 SPINDLE (figure 7-36)

1. Remove upper and bottom covers.
2. Remove index unit with support (see 5.14)
3. Remove fixed disk (see 5.15).
4. Remove spindle earth contact by loosen the socket screw.
5. Remove drive belt.
6. Loosen the nut, holding the pulley in position (special-tool).
7. Take of the pulley.
8. Loosen the three screws holding the spindle.
9. Take out the spindle (upwards). Take care of the shims between spindle and frame.
10. Replace new spindle, DON'T FORGET THE SHIMS.
11. Replace pulley.

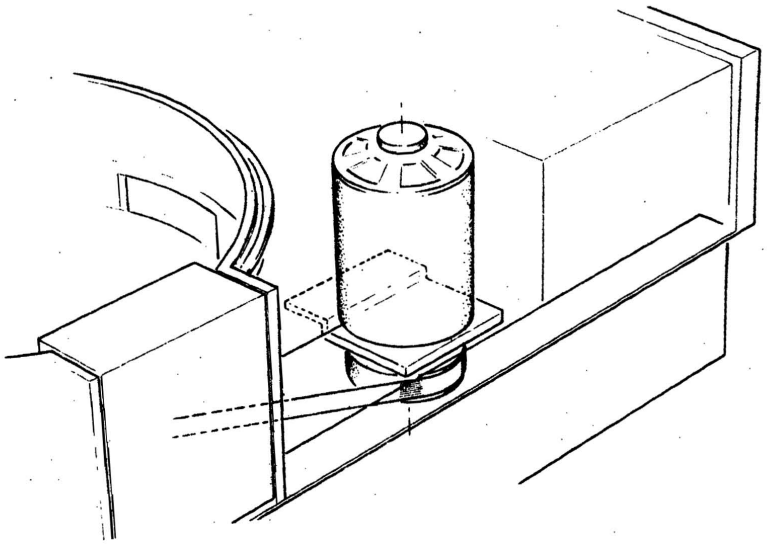

Figure 7-37

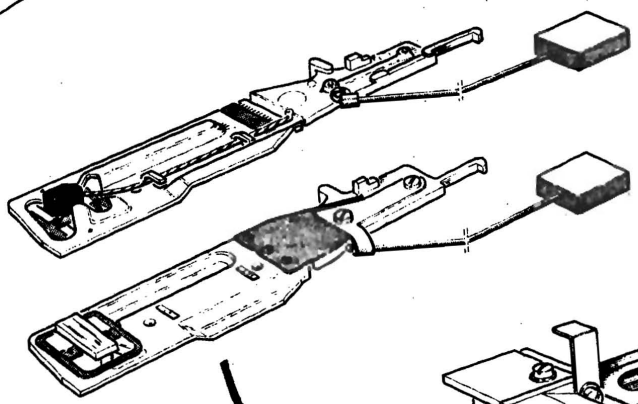

Figure 7-38

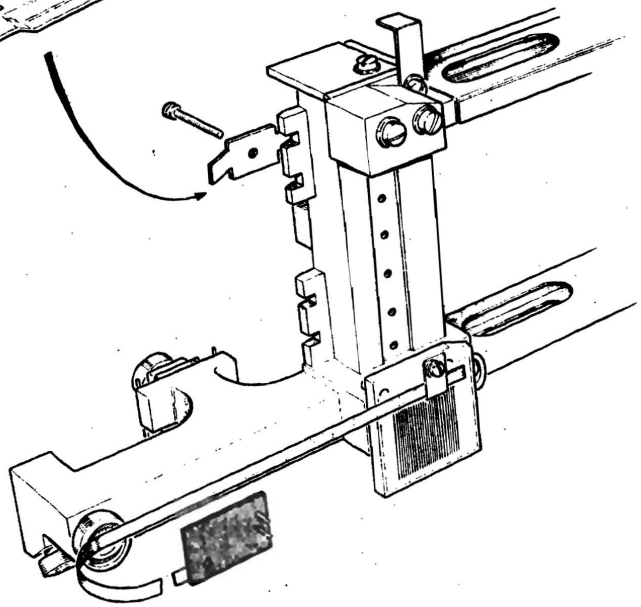

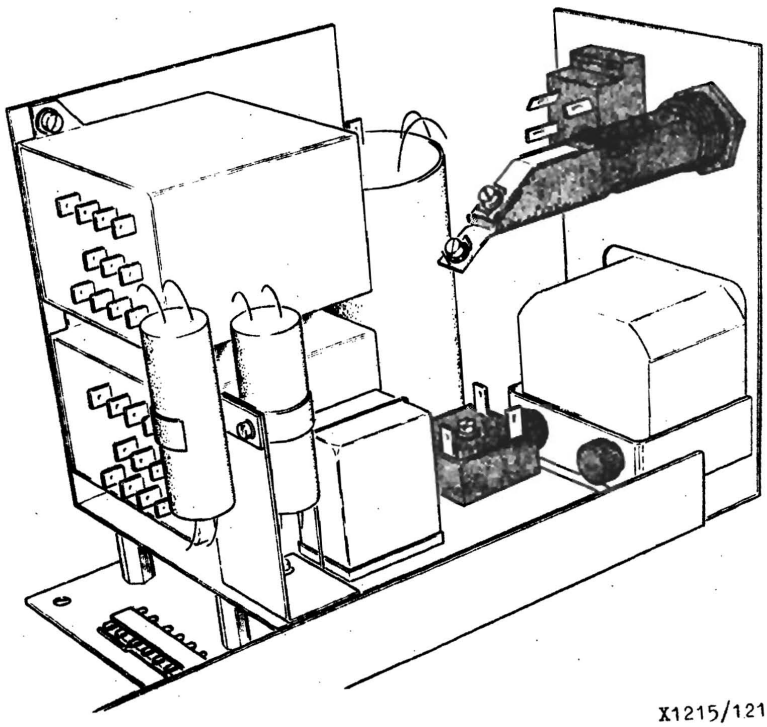

Figure 7-39

12. Replace drive belt.
13. Replace earth contact.
14. Check belt tension (5.19).
15. Replace bottom cover.
16. Replace fixed disk.
17. Replace index unit.
18. Replace covers.

5.17 PACK MOTOR (figure 7-37)

1. Remove upper and bottom covers.
2. Remove drive belt.
3. Remove the protection sheet on the connecting block.
4. Disconnect wires from connecting block.
5. Remove pulley from the motorshaft.
6. Remove the mounting plate with the motor.
7. Remove the motor.
8. Replace new motor.
9. Replace pulley
10. Replace drive belt.
11. Adjust tension of drive belt
12. Connect the wires on the connecting block.
13. Replace protection sheet.
14. Replace covers.

5.18 HEADS (figure 7-38) See 5.21 for headcrash procedure

1. Remove rear top cover.
2. Disconnect head plugs from pre-amplifier card.
3. Insert head remover (special tool).
4. Unscrew the two head fixing screws.
5. Remove the head screws and clamp.
6. Remove carefully the head.
7. Insert new head in the head remover.
8. Replace new head.
9. Partially fasten the screws.
10. Take off the head remover.
11. Adjust the heads (3.6).
12. Fasten the screws with a torque wrench 7 kgf/cm.

5.19 SWITCHING UNIT (figure 7-39)

1. Remove rear top cover.
2. Remove bottom cover.
3. Remove protection sheet on the connecting block.
4. Remove earth wires and cables to pack motor and cleaning motor.
5. Loosen the two screws at the right side, and the two at the rear side.
6. Take out the unit as far as possible.
7. Loosen the other wires, noting their position.
8. Fasten the wires to the new unit.
9. Replace new unit.
10. Fasten the cables.
11. Replace protection sheet.
12. Replace bottom-and rear top cover.

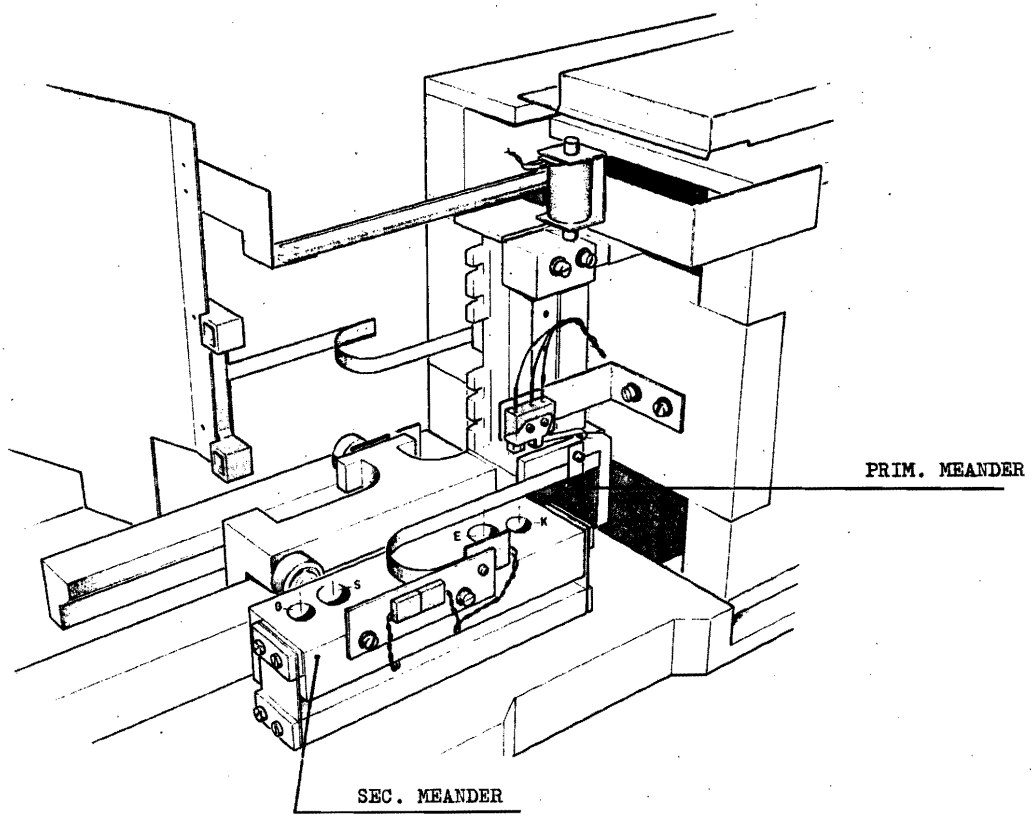

Figure 7-40

5.20 MEANDER (figure 7-40)

1. Remove index unit with support, see 5-14.*
2. Remove cartridge holder.*
3. Remove fixed disk, see 5-15.*
4. Loosen the screw clamping the stabilizer rod.
5. Loosen stabilizer rod from meander block.*
6. Loosen prim. meander supply wires.
7. Loosen two screws holding secondary meander block.
8. Carefully take out the meander block.

   Insert new one: KEEP IT AS FAR AS POSSIBLE FROM THE PRIM MEANDER
10. Fasten the supply wires.
11. Fasten stabilizer rod to meander and clamping block.*
12. Replace fixed disk.*
13. Replace the cartridge holder, DON'T FORGET THE SHIMS.*
14. Replace index unit.*
15. Adjust secondary meander (see 3.2).
16. Adjust index unit (see 4.2).

* Only if stabilizer rod is installed.

5.21 AFTER HEADCRASH PROCEDURE

In order to minimize the number of headcrashes an "after headcrash" procedure and an "after repair" procedure must be done.

1. Remove cartridge and fixed disc and clean the whole disc compartment using a brush and vacuum cleaner: brushing to be done in the direction of the vacuum cleaner.
2. Clean the disc compartment with isopropyl and cotton wool.
   If the headcrash is occurred on the cartridge, clean the fixed disc with isopropyl and cotton wool.
3. Replace the fixed disc. Do not tough the disc with your hands, useclean gloves which are only used for this purpose.
4. Check all the customer cartridges on physical damages.
   If the headcrash occurred on the fixed disc clean all cartridges which have been on the unit concerned with isopropyl and cotton wool in a dustfree area of the workshop.
   A disc on which the headcrash occurred must be replaced. This also applies to discs which show physical damage after cleaning.
5. Clean all heads with isopropyl and scott wiper, after a headcrash.
   Heads having a surface contamination of more than 20 0/0 are to be replaced. Just as well as heads which show physical damage after cleaning.
6. Remove the fused f5 and f6, switch on the machine and leave the machine turing for at least one hour to blow away all remaining dust.
7. Replace fuses againg.

AFTER REPAIR PROCEDURE

1. Clean cartridge compartment with bursh and vacuum cleaner a vacuum clean the inside of cabinet.
2. Make 5 full switch on procedures to get rid of possible dust by means of the cleaning cycle.
   We like to point once more to the fact, THAT THE DISTANCE BETWEEN HEADS AND DISC IS ONLY 2,5 UM.
   This means that even a finger print or a smake particle on the disc causes a headcrash. That is why it is forbidden to smore or to eat during the time that the covers are taken off.

6.1 GENERAL

If there is a fault in the C.D.D. the following fault-finding procedure is recommended.
a) Check that the cards are in the right location in the Electronics Cage.
b) Check that the cards are pushed fully home.
c) Check that all plugs are connected.

X1215/16 (ABOVE SERIAL NUMBER 2000)

Cartridge Disk Drive Unit

Vol. VIII: Parts List

Data Systems

LOCATOR

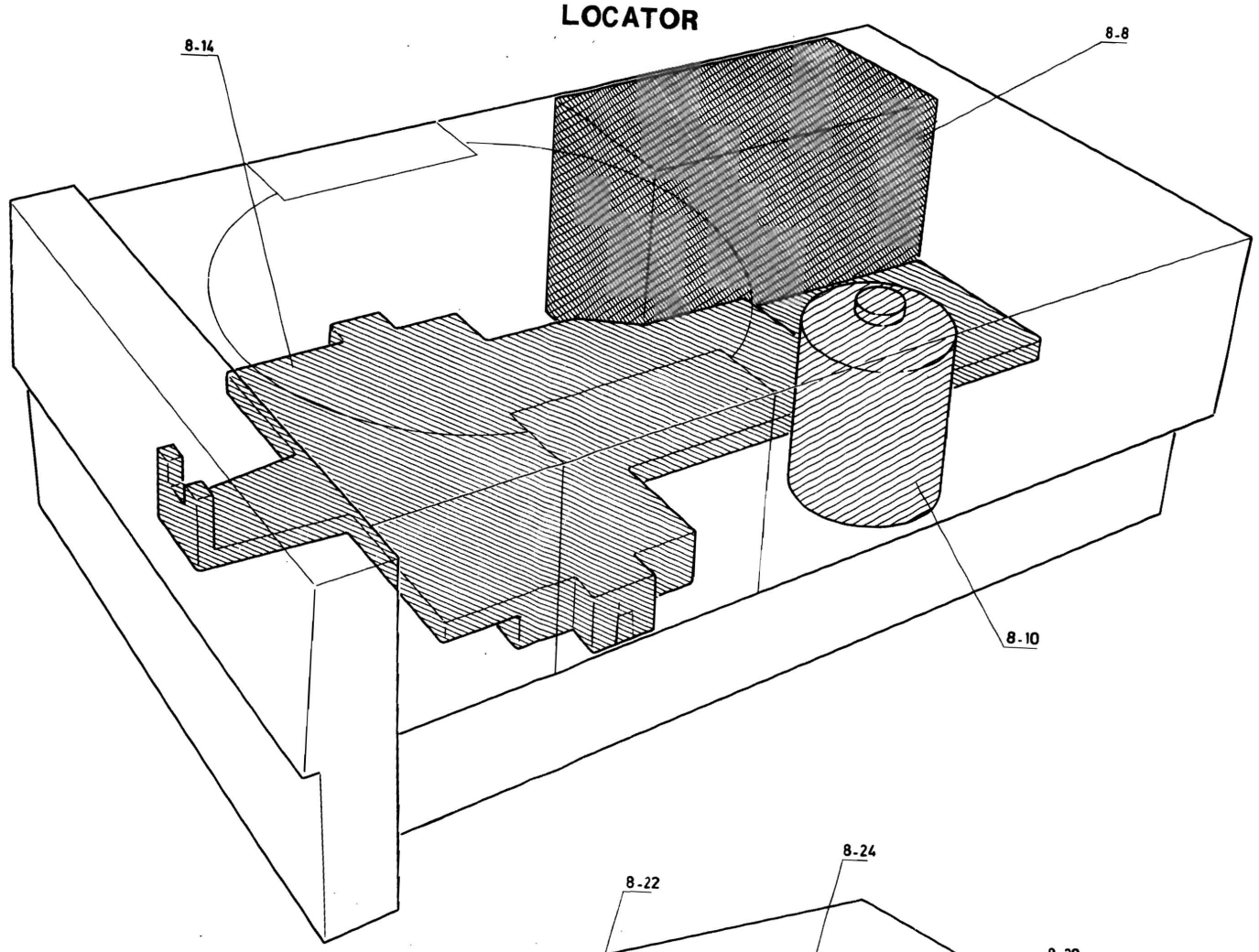

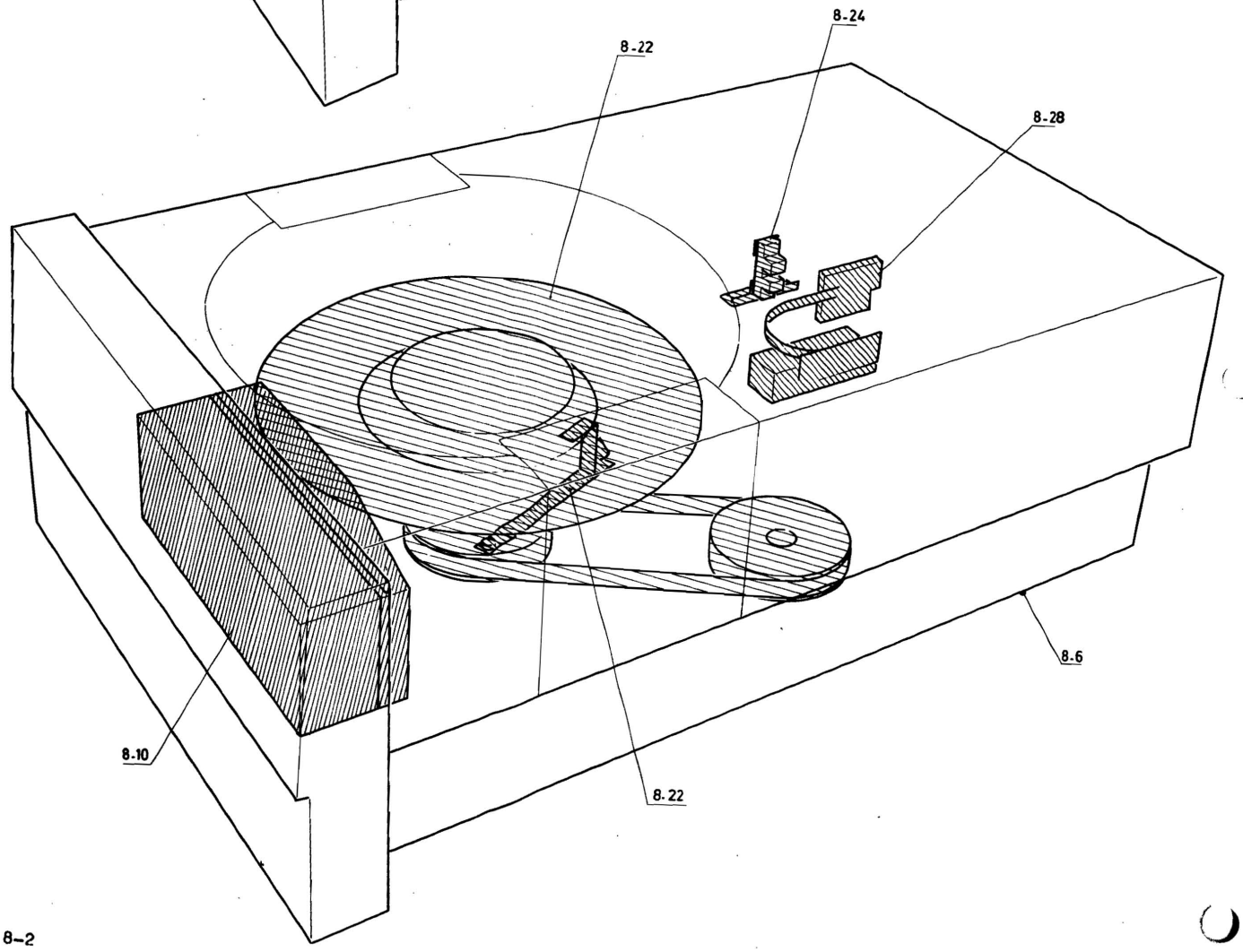

X1215

7612

LOCATOR

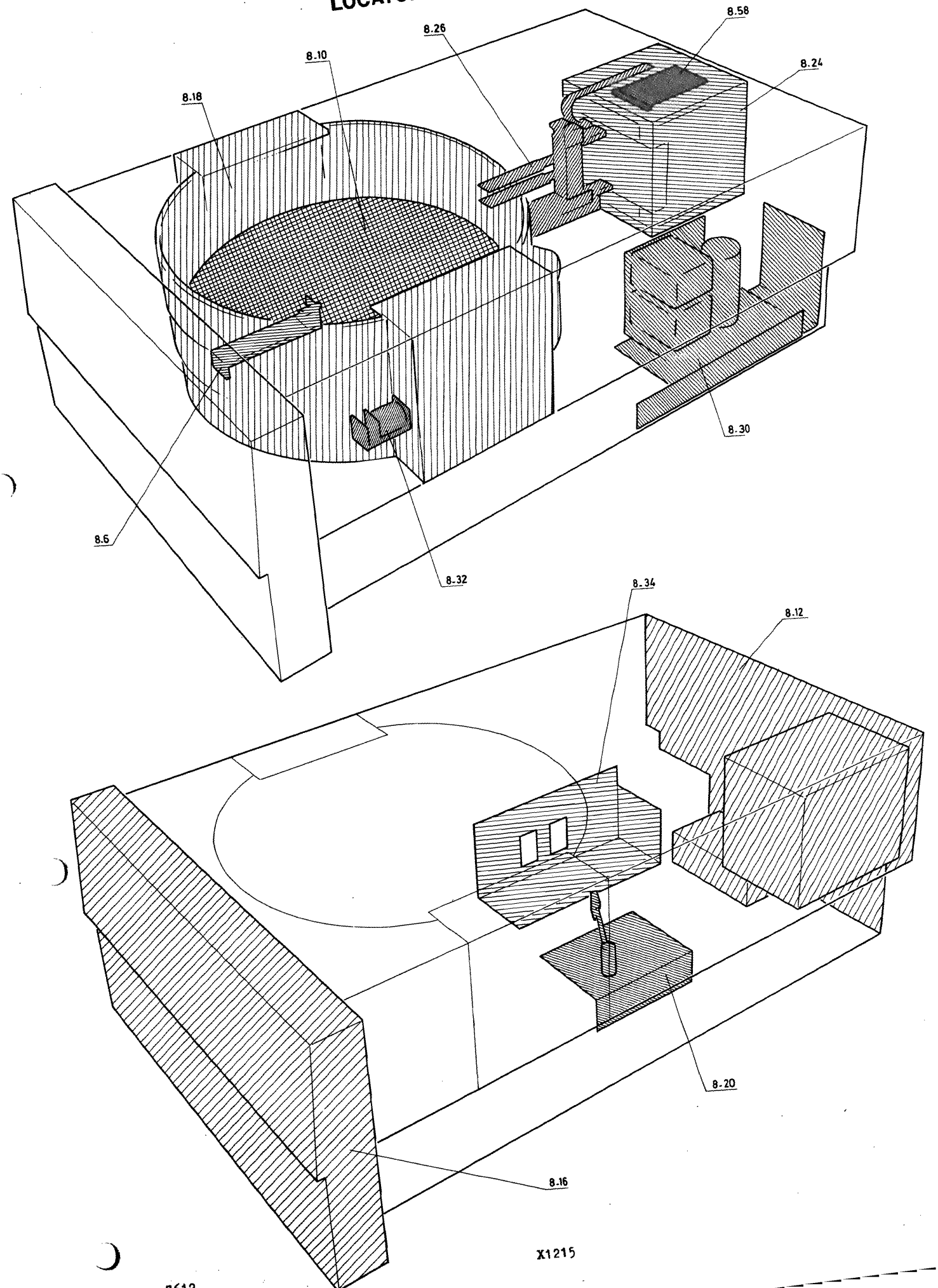

X1215

7612

CARD LOCATOR

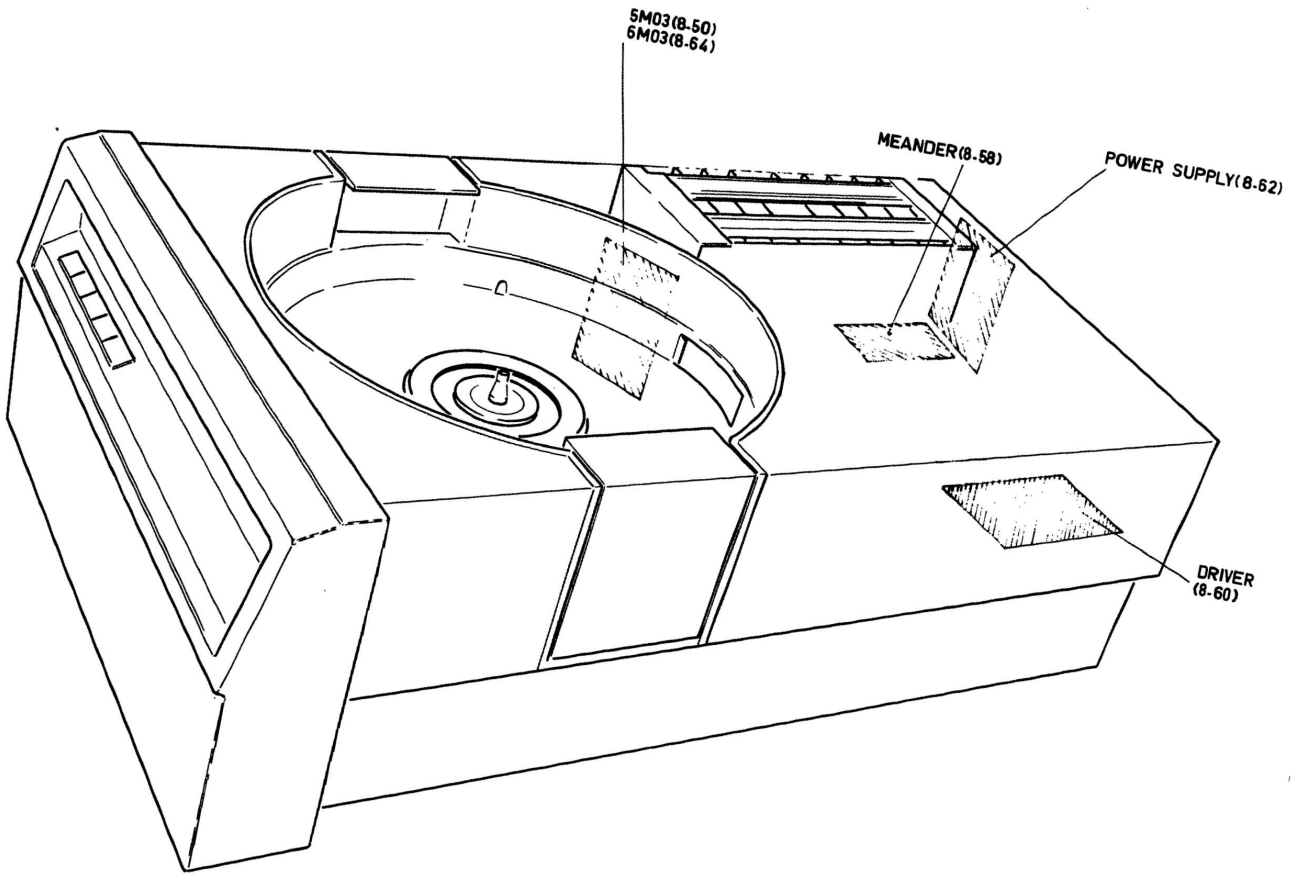

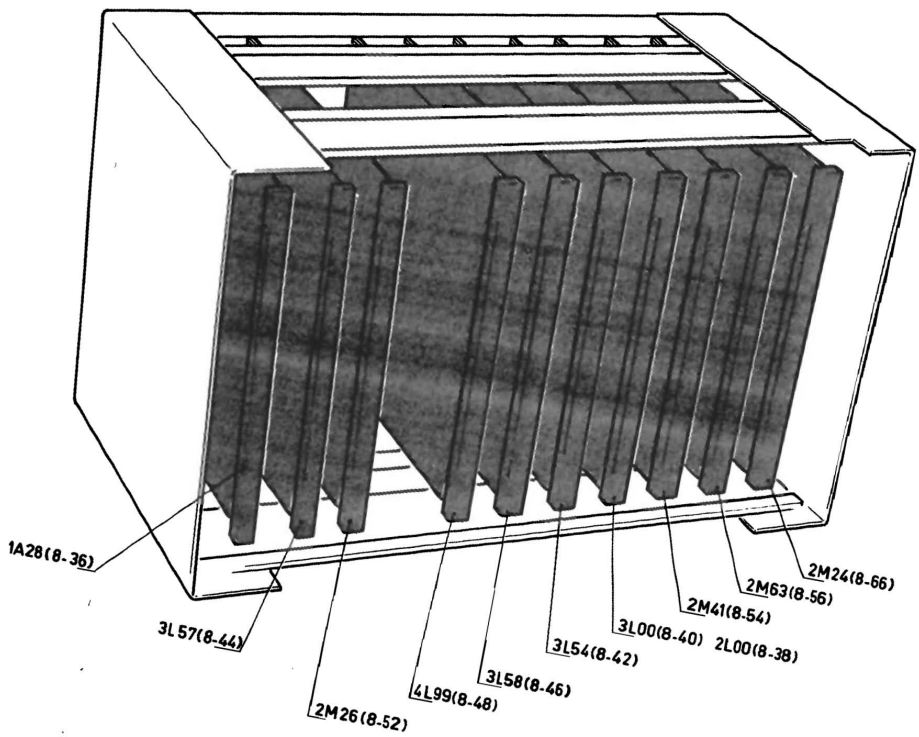

X1215

CARD LOCATOR

PCBA	Part number	Description		PAGE
1A28	5322 216 24961	Power Amplifier	X1215-1216	8-36
2L00	5322 216 24495	Interface Card	X1215-1216	8-38
3L00	5322 216 24653	Interface Card	X1215-1216	8-40
3L54	5322 216 24592	Fault Indicator	X1215-1216	8-42
3L57	5322 216 24958	Start Stop	X1215-1216	8-44
3L58	5322 216 24957	Control Unsafe Position	X1215-1216	8-46
4L99	5322 216	Decrement Counter	X1215-1216	8-48
5M03	5322 216 25017	Read Write	X1215	8-50
2M26	5322 216 24959	Servo Electronic	X1215-1216	8-52
2M41	5322 216 25018	Dust Bin Card	X1215-1216	8-54
2M63	5322 216 24913	Read Recovery	X1215-1216	8-56
MEANDER	5322 216 24482	MEANDER	X1215-1216	8-58
1M87	5322 216 24485	Driver	X1215-1216	8-60
P.S.	5322 216 24496	Power Supply	X1215-1216	8-62
6M03	5322 216 24955	Read Write	X1216	8-64
2M24	5322 216 24956	Limitter Amplifier Temp.	X1216	8-66

FINAL ASSEMBLY

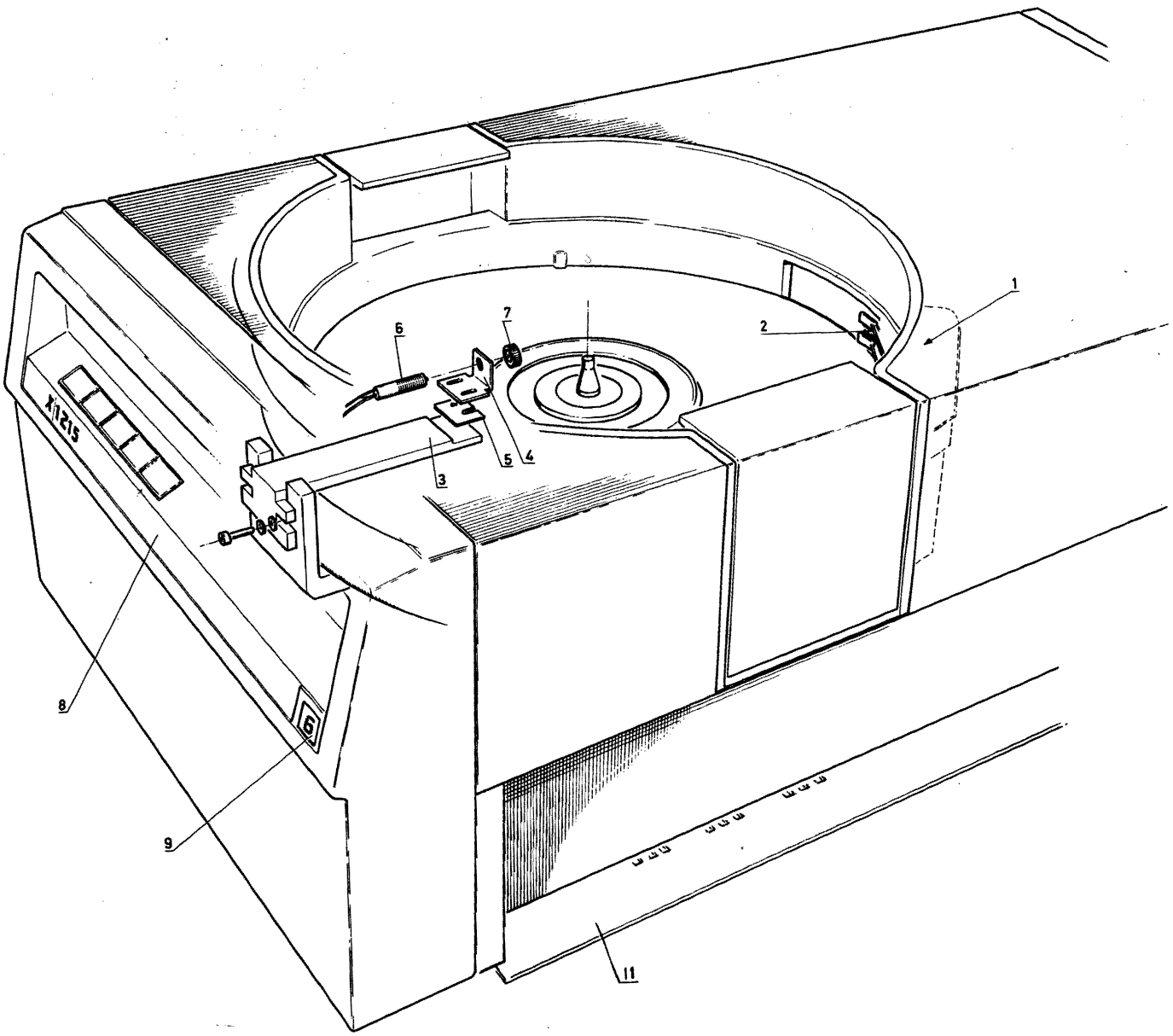

7612

X1215

Item nr	Part number	Description	Qty. per ass'y
A		Final assembly (X1215U)	1
B		Main assembly	1
1B	5322 361 24035	Cleaning mechanism assembly *	1
2B	5322 474 34007	Brush shaft assembly *	1
3B		Bracket for index p.u.	1
4B		Support for index p.u.	1
5B	5322 466 85379	Spacer	8
6B	5322 321 24497	Pick up assembly	1
7B	5322 505 14199	Lock nut	1
8B	5322 456 34173	Ornamental strip	1
9B		Number plate (10 plates, 9 numbers and one without number)	1
10B		Type and mod. plate	1
11B		Bottom Plate	1

* for more details see cleaning mechanism, page

MAIN ASSEMBLY

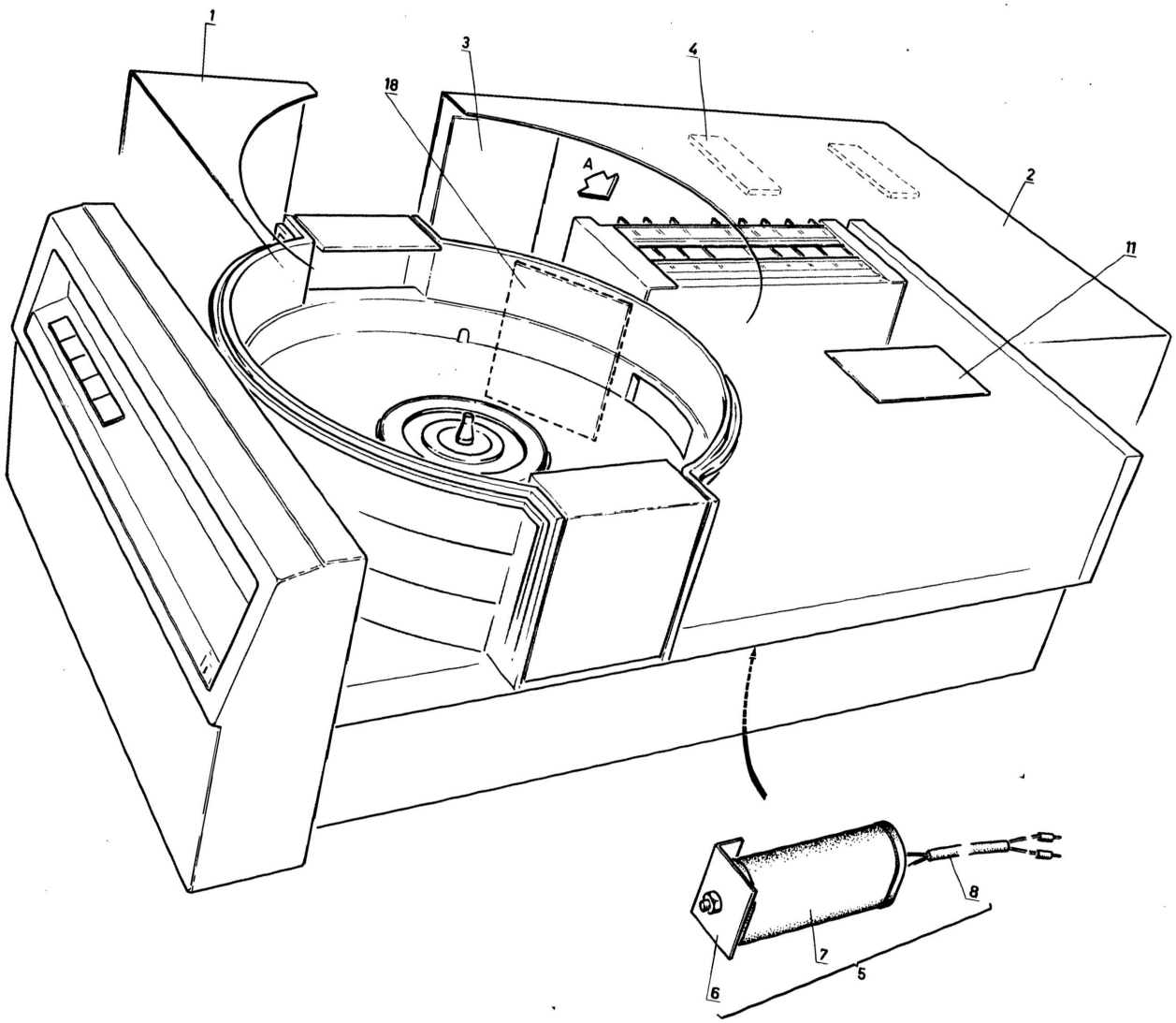

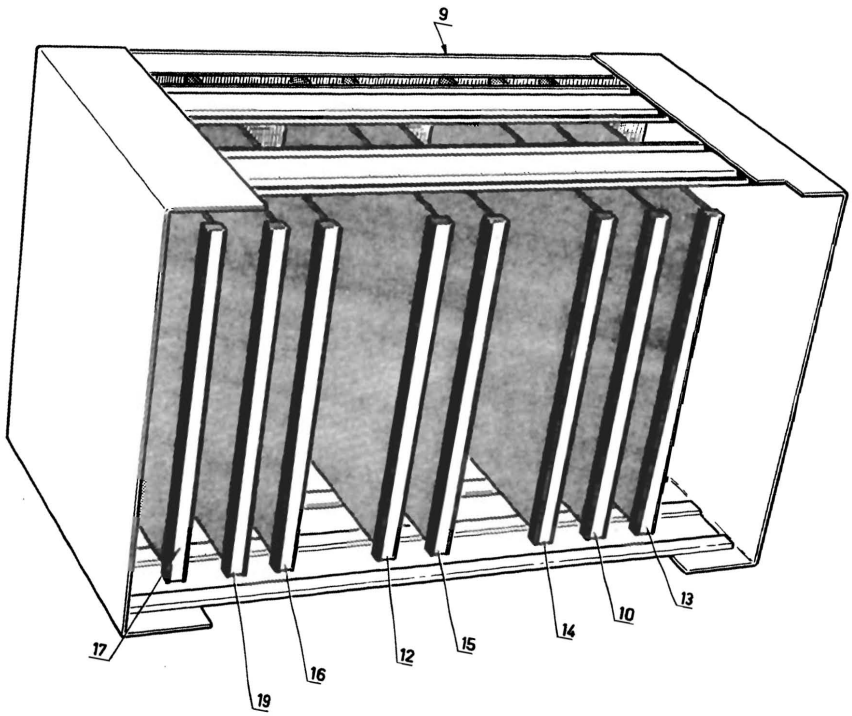

Item nr	Part number	Description	Qty. per ass'y
A		Final assembly	1
B		Main assembly	1
1C	5322 447 84396	Front cover	1
2C	5322 447 84533	Rear cover	1
3C		Plate	2
4C		Foam rubber	1
5C		Capacitor assembly	1
6D		Bracket	1
7D		Capacitor	1
8D		Cable harness	1
9C	5322 263 74103	Board rear	1
10C	5322 216 25018	PCBA,2M41	1
11C	5322 216 24482	PCBA,Meander	1
12C	5322 216 24694	PCBA, 4L99	1
13C	5322 216 24913	PCBA, 2M63	1
14C	5322 216 24495	PCBA, 2L00	1
15C	5322 216 24957	PCBA, 3L58	1
16C	5322 216 24959	PCBA, 2M26	1
17C	5322 216 24961	PCBA, 1A28	1
18C	5322 216 25017	PCBA, 5M03	1
19C	5322 216 24958	PCBA, 3L57	1

SUB-MAIN ASSEMBLY

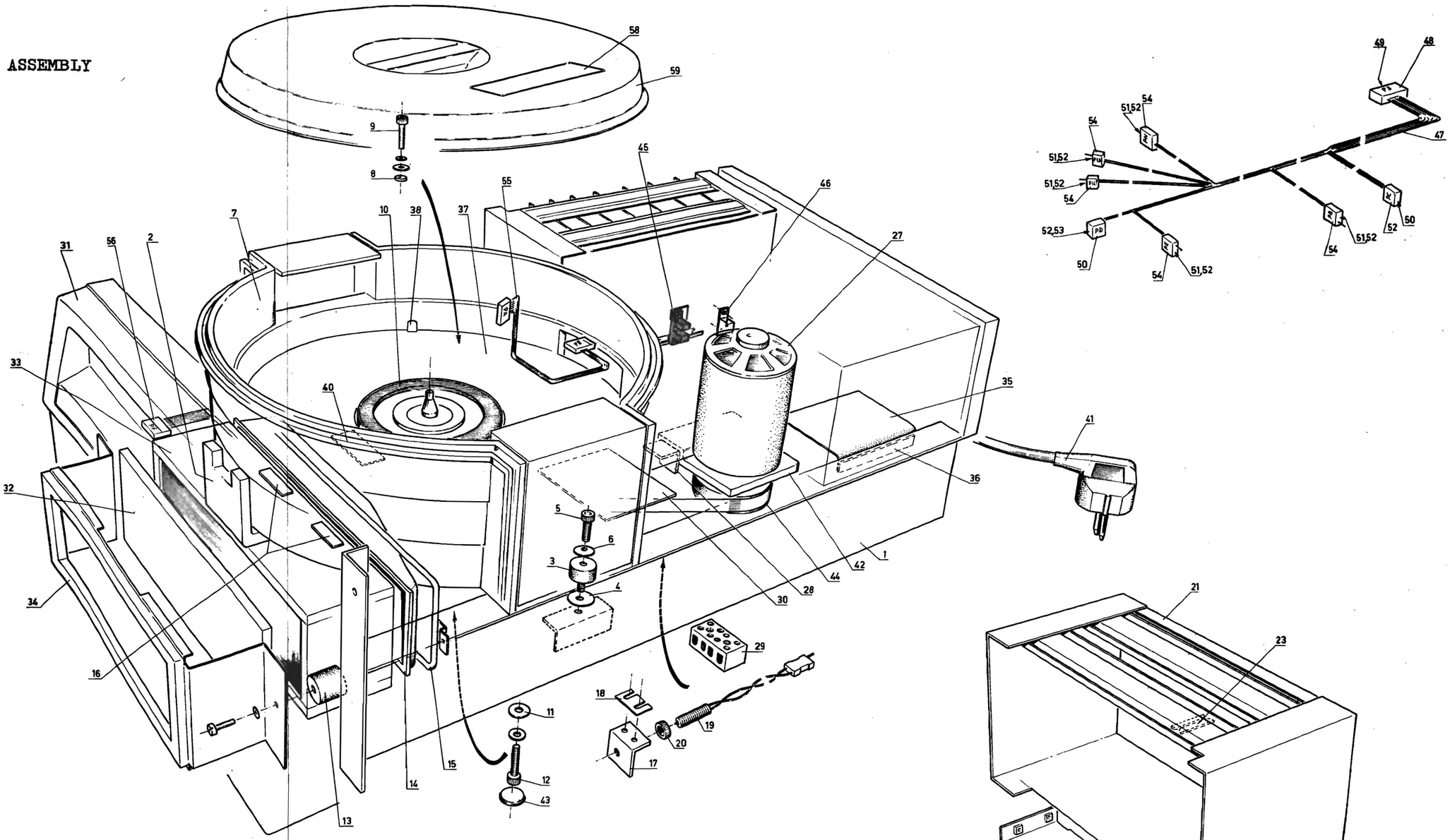

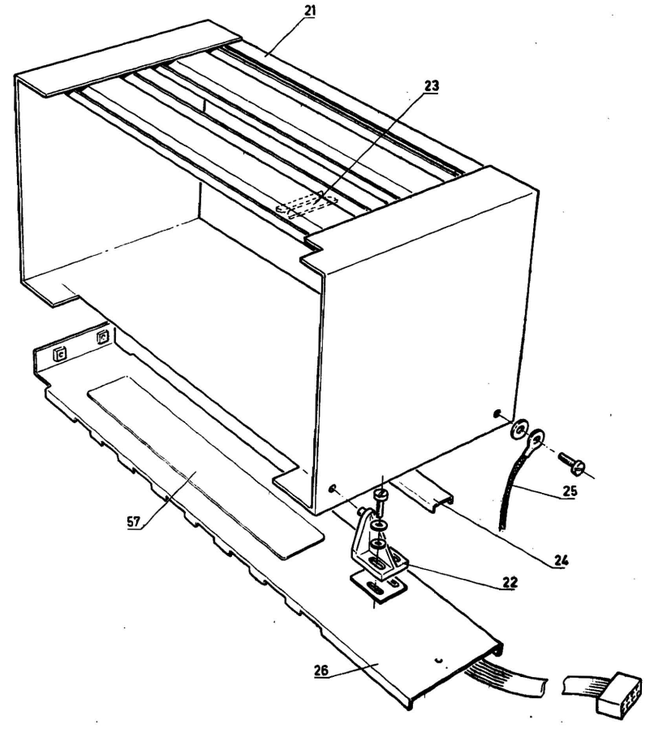

Item nr	Part number	Description	Qty. per ass'y
A		Final assembly	1
B		Main assembly	1
C		Sub assembly X1215U	1
1D		Frame assembly *	1
2D		Deck assembly *	1
3D		Buffer	2
4D	5322 532 14503	Spacer	12
5D		Socket screw M6x20	2
6D		Disc spring (Washer)	4
7D	5322 693 24035	Cartridge holder *	1
8D		Spacer	3
9D		Socket screw M6x12	3
10D	5322 522 34472	Spindle assembly *	1
11D	5322 532 14531	Spacer (between spindle assy and deck assy)	6
12D		Socket screw M6x25	3
13D		Spacer	2
14D		Intake house assy	1
15D		Pressure window	1
16D		Rubber strip	2
17D		Mounting bracket	1
18D	5322 466 85338	Spacer	3
19D	5322 321 24497	Pick up assy	1
20D	5322 505 14199	Lock nut	1
21D		Electronic box	1
22D	5322 466 94417	Hinge block	2
23D	5322 462 30151	Card guide	40
24D		Relief bracket	1
25D		Earth cable	1
26D		Plate	1
27D	5322 361 24097	Motor assembly	1
—E		Motor	1
28D		Bracket	1
29D	5322 290 64111	Connecting block 4P.	1
30D		Sheet	1
31D	5322 447 84534	Front assy (wired)*	1
32D		Front filter	1
33D	5322 480 54015	Air filter	1
34D		Pressure window	1
35D		Melinex sheet	1
36D		Strip	1
37D		Bottom assembly	1
38D		Lock	1
—D		Lock (small)	3
40D		Plate	1
41D	5322 321 14049	Main cable assy	1
42D		Motor mounting plate	1
43D		Stop	2
44D		Pulley (for details see spindle assy)	1
45D	5322 218 74395	Index unit assy *	
46D	5322 405 46154	Vane (mounted on carriage)	1
47D		Cable assy	1
48E		Connecting block 20p.	1
49E	5322 268 24041	Bus contact	18
50E		Connecting block 6p.	2
51E	5322 268 14055	Pen contact	4
52E	5322 268 24058	Bus contact	14
53E	5322 462 44161	Pos-key	4
54E		Connector-house	5
55D		Cable assy	1
56D		Cable assy	1
57D		Sticker	1
58D	5122 290 23770	Dust cover assy	
59E	5122 200 73730	Dust cover	
59E	5122 200 74030	Sticker	

* for details see next pages.

FRAME

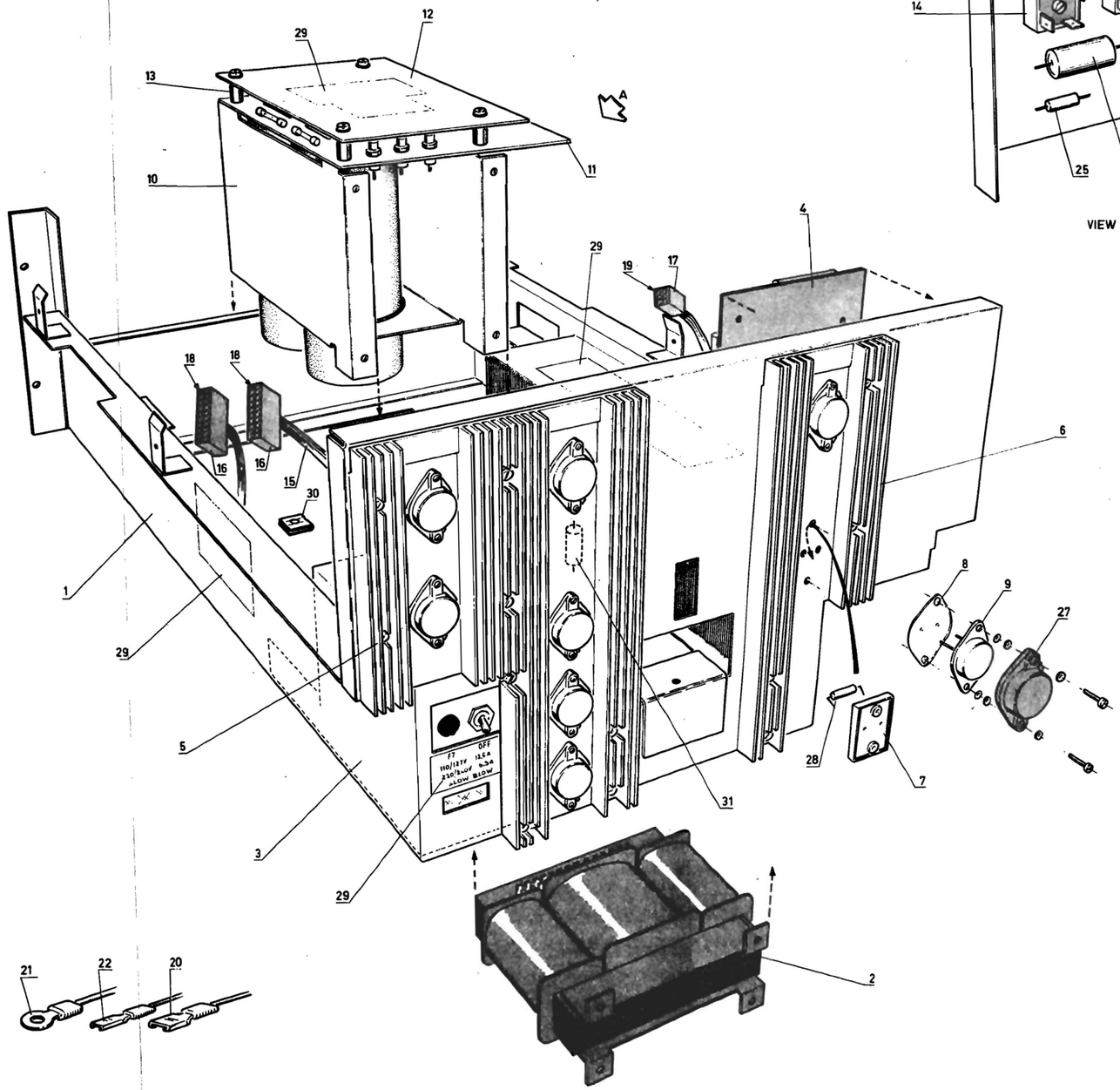

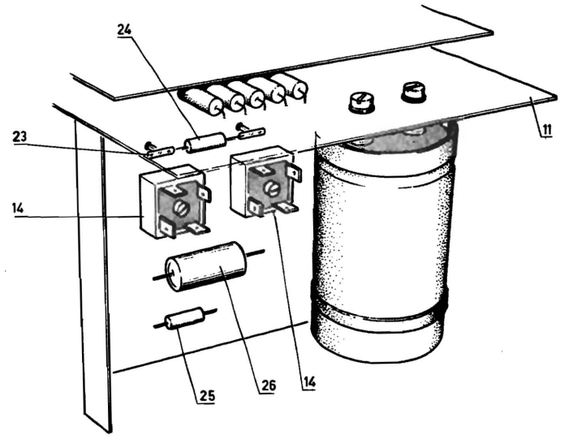

VIEW A

X1215

Item nr	Part number	Description	Qty. per ass'y
A		Final assembly	1
B		Main assembly	1
C		Sub assy X1215U	1
D		Frame assy	1
1E		Frame	1
2E	5322 146 14096	Transformer	1
3E		Switching unit	1
4E	5322 216 24496	Pdwer supply card	1
5E		Heatsink, 1	1
6E		Heatsink, 2	1
7E	5322 255 40085	Trans mounting plate	8
8E		Mica plate	8
9E		Transistor 2N3442	8
10E		Bracket	1
11E	5322 216 24485	Driver card	1
12E		180 Insulating plate	1
13E		Spacer	4
14E		Bridge rectifier PB20	2
15E		Cable, back plate	1
16F		Connector block, 20 pos	2
17F		Connector block 6 pos	1
18F	5322 268 24041	Socket contact	38
19F	5322 268 24058	Socket contact	6
20F		Cable tag	10
21F		Cable tag (eye)	5
22F		Cable tag	2
23E		Mounting support	5
24E		Diode BYX 36-600	1
25E	4822 112 21081	Wire wound resistor 100E 5%	1
26E	5322 124 24123	Elco 100/uF 63V	1
27E	5322 462 44172	Insulating cap, T03	8
28E	5322 116 50484	Resistor 4K64 1%	4
29E		Identification label	1
30E		Speed nut	10
31E		Wire wound resistor	1

DECK ASSEMBLY

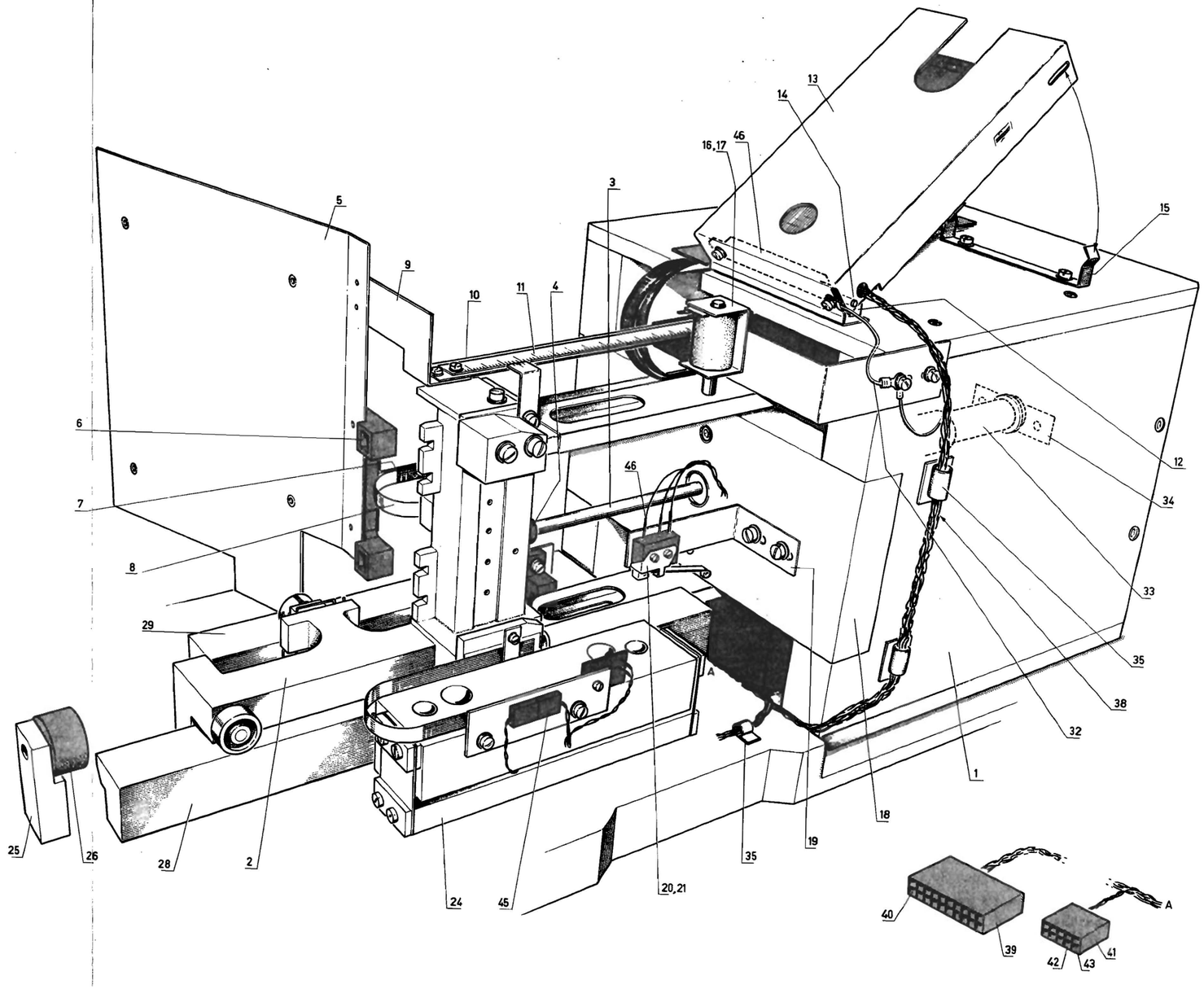

Item nr	Part number	Description	Qty. per ass'y
A		Final assembly	1
B		Main assembly	1
C		Sub assy X1215U	1
D		Deck assembly	1
1E		Magnet house assy	1
2E	5322 691 64238	Carriage assy	1
3E		Magnet core	1
4E	5322 532 64177	Buffer carriage, blackside	1
5E		Plate	1
6E		Clamp	1
7E		Bracket	1
8E	5322 466 85256	Earth strip assy	1
9E		Bracket	1
10E		Strip	1
11E		Reading rule	1
12E		Hing bracket	1
13E		Meander housing	1
14E		Shaft	1
15E	5322 492 64515	Spring	1
16E		Bracket	1
17E	5322 281 54027	Magnet	1
18E		Front plate	1
19E		Bracket	1
20E	5322 271 30025	Micro switch	1
21E	5322 401 14045	Micro switch lever	1
23E	5322 401 14129	Cable clamp	2
24E	5322 218 84068	Sec. meander transfer	1
25E		Block	1
26E	5322 532 64176	Buffer carriage, front side	1
27E		Ground plate	1
28E		Guide rule, long	1
29E		Guide rule, short	1
30E		Clamping block	1
31E		Closing plate	1
32E		Earth cable	1
33E		Coil	1
34E		Plate	1
35E		Cable clamp	1
38E		Cable tree	1
39F		Connector block 20 pins	1
40F	5322 268 24041	Socket connector	18
41F		Connector block 10 pins	1
42F	5322 268 24058	Socket connector	10
43F	5322 462 44161	Key, position	3
44F	5322 267 34023	Socket connector	5
45F		Connector block 6 pins	1
46F	5322 267 50096	Print wired connector 2x10 pins	1
47D	5322 325 64067	Tule	1
48D		Compensation rod	1
49D	5322 532 64149	Ring	1
50C	5322 216 24482	PCBA, Meander	1

FRONT

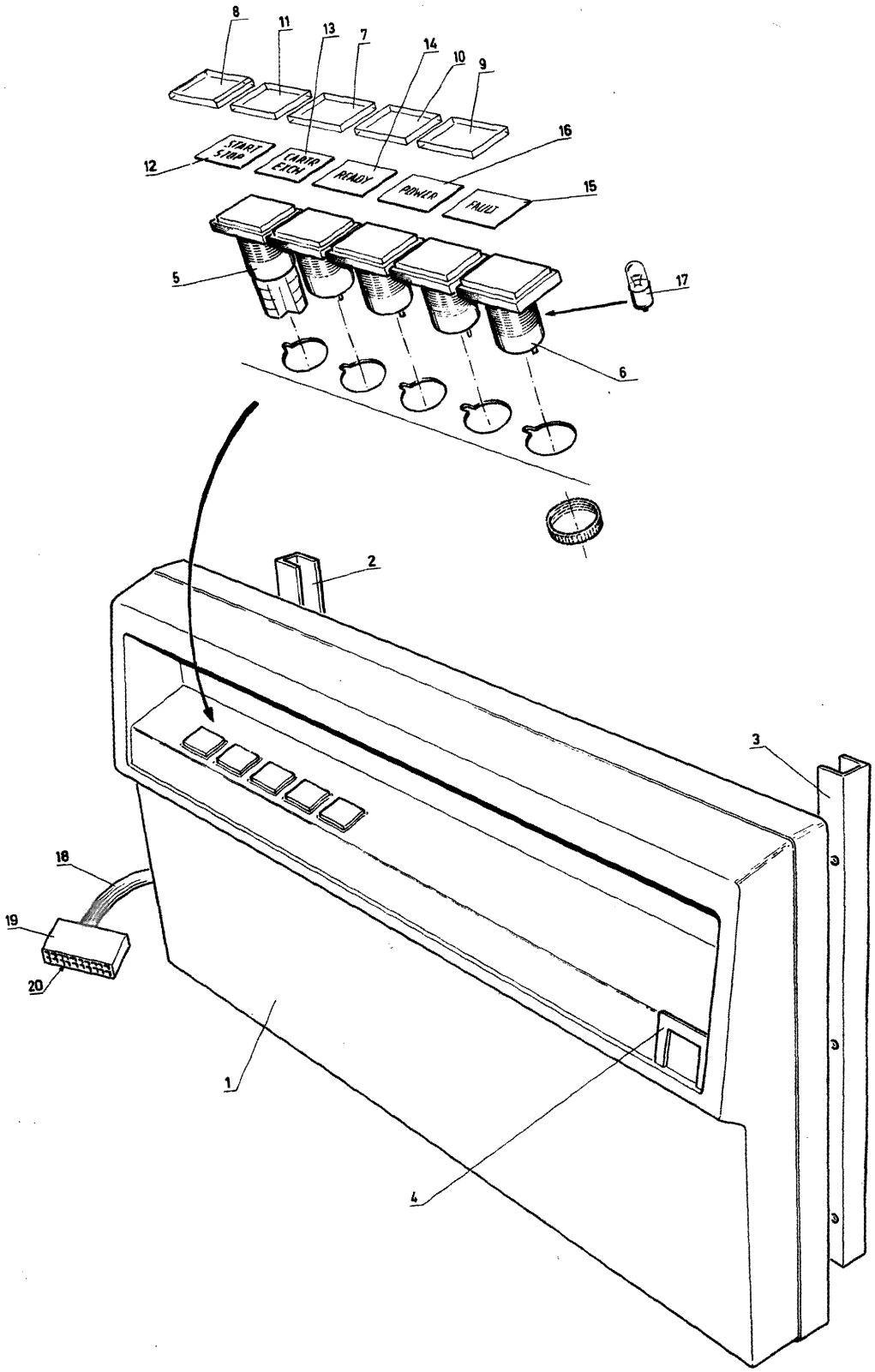

7612

X1215

Item nr	Part number	Description	Qty. per ass'y
A		Final assembly	1
B		Main assembly	1
C		Sub assembly	1
D	5322 447 84534	Front, wired	1
1E		Front	1
2E		Fixing beam, left	1
3E		Fixing beam, right	1
4E	5322 459 14064	Holder	1
5E	5322 276 14172	Push button, switch	1
6E	5322 255 24022	Lamp holder	4
7E	5322 381 14154	Lens cap, 31-903, transparant	1
8E	5322 381 14157	Lens cap, 31-904, transparant	1
9E	5322 381 14155	Lens cap, 31-903, red	1
10E	5322 381 14163	Lens cap, 31-903, yellow	1
11E	5322 381 14156	Lens cap, 31-903, green	1
12E	5322 459 14059	Text film, start-stop	1
13E	5322 456 34035	Text film, cartr. - exch	1
14E	5322 456 34039	Text film, ready	1
15E	5322 456 34036	Text film, fault	1
16E	5322 456 34038	Text film, power	1
17E		Lamp, type 386, 14V-80mA	5
18E		Cableform, front	1
19F		Connector block 20pos.	1
20F	5322 268 14055	Pin contact	18

CARTRIDGE HOLDER

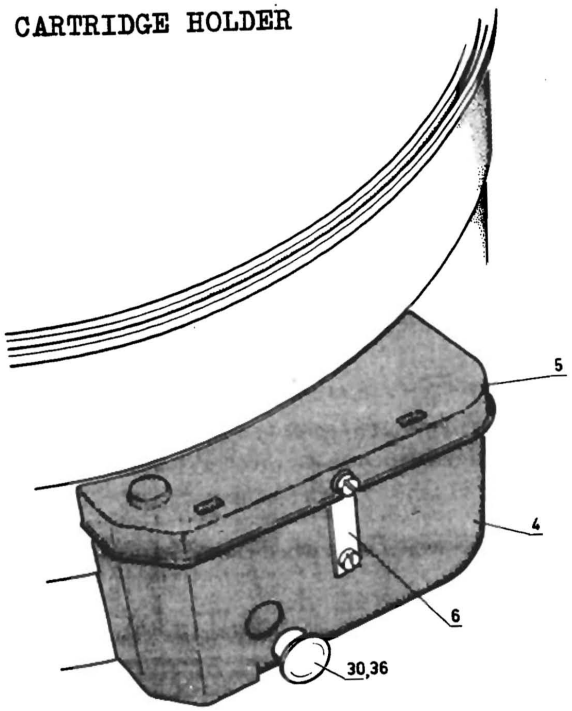

VIEW A

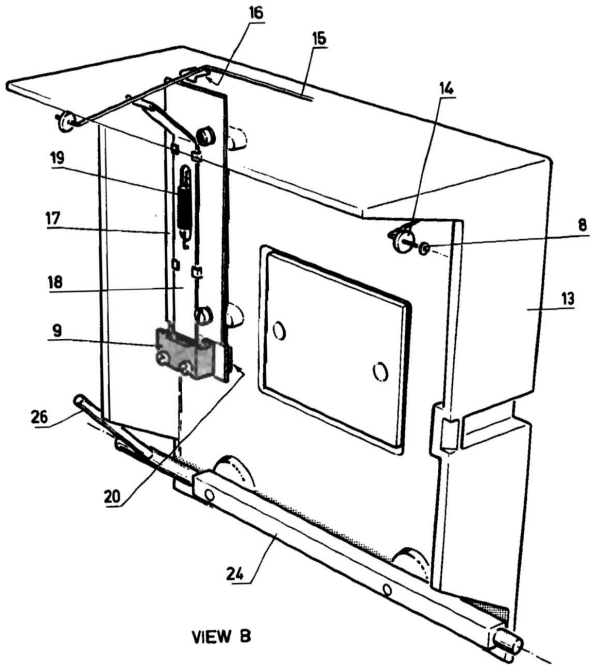

VIEW B

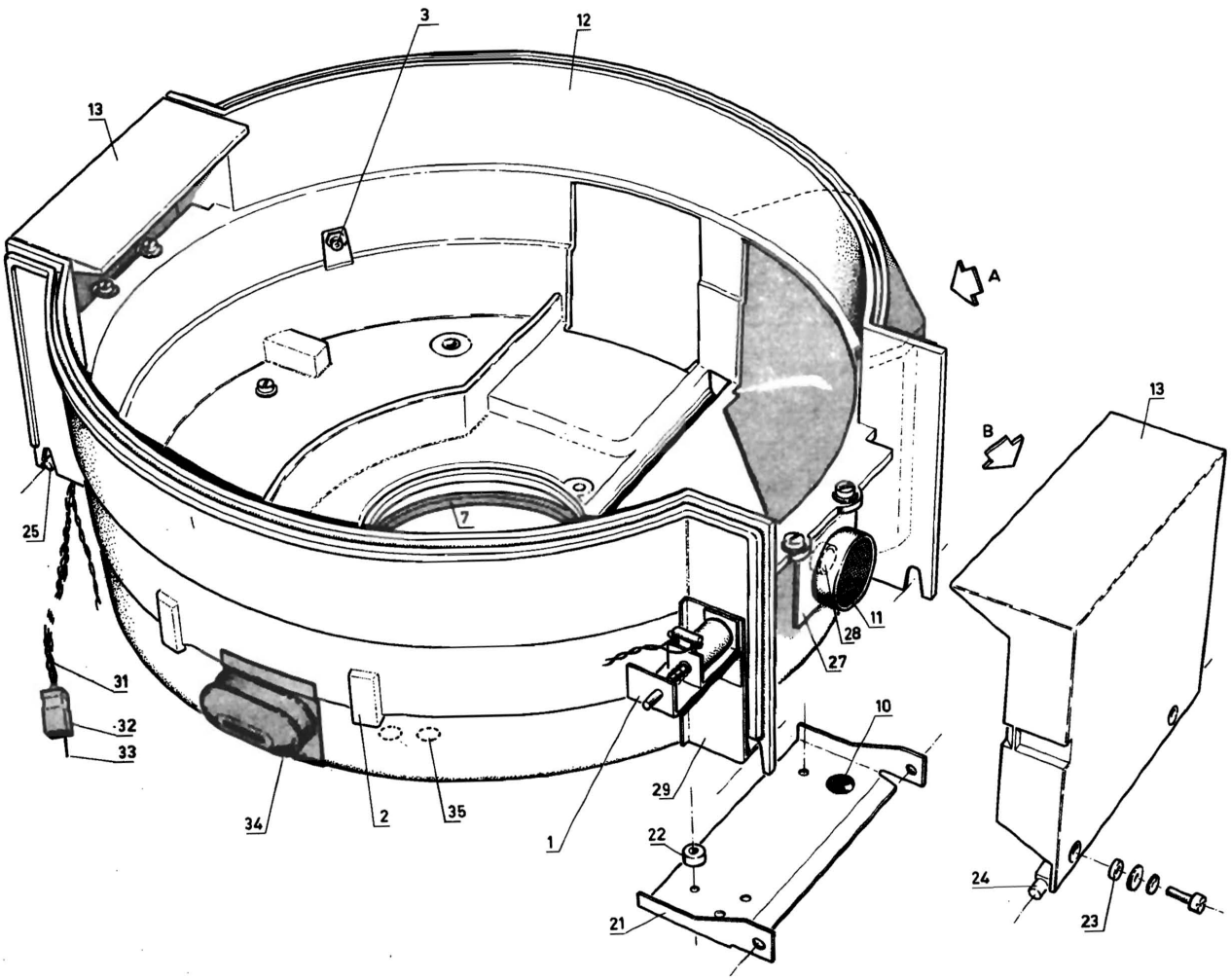

Item nr	Part number	Description	Qty. per ass'y
A		Final assembly	1
B		Main assembly	1
C		Sub assembly	1
D	5322 693 24035	Cartridge holder	1
1C	5322 218 84061	Lock magnet	1
2C		Plate	4
3C		Nut	4
4C		Reversing case	1
5C		Lid	1
6C		Mounting plate	1
7C		Foam rubber, 0,4M	1
8C		Lockring	4
9C	5322 271 34113	Switch	2
10C	4822 325 60091	Tule	2
11C		Magnet	2
12C		Cassette holder	1
13C	5322 466 85439	Clamp	2
14C		Roller	4
15C		Spring	2
16C		Bracket	4
17C		Bracket, switching	2
18C		Plate	2
19C		Tension, spring	2
20C	5322 466 85586	Nut plate	2
21C		Bracket	2
22C		Spacer	8
23C		Ring	4
24C		Shaft, right	1
25C		Shaft, left	1
26C	5322 535 94705	Pin	1
27C		Bracket	2
28C		Clamping bush	2
29C		Bracket	1
30C	5322 325 54039	Stop	1
31C		Cable harness	1
32D		Connector block 6P	1
33D	5322 268 14055	Pin contact	4
34C	5322 325 84019	Tule	1
35C		Sealing plug	2
36C		O ring, 14,3 x 2,4	1

CLEAN MECHANISM

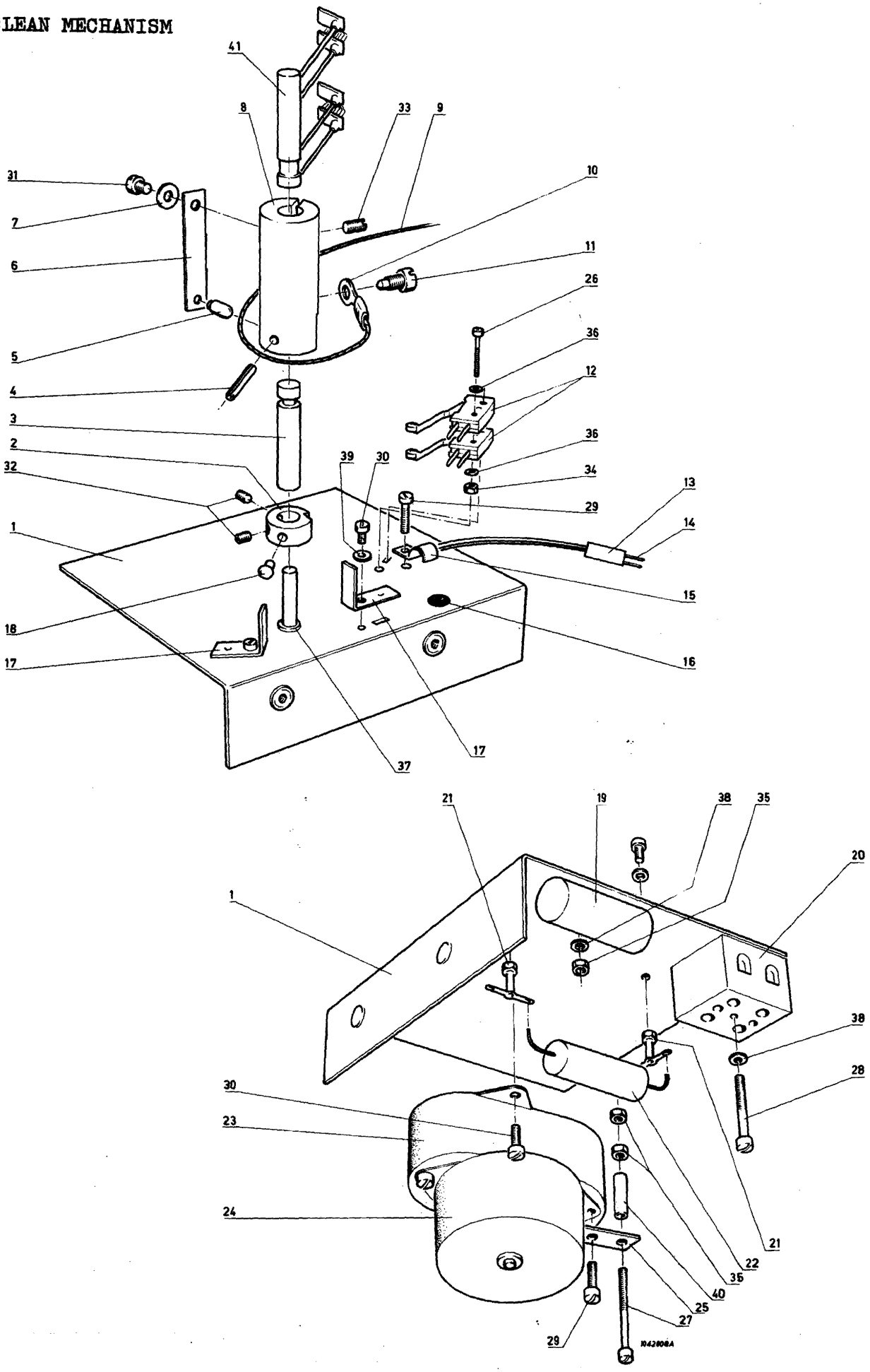

Item nr	Part number	Description	Qty. per ass'y
A		Final assembly	1
B		Clean mechanism	1
1C		Bracket	1
2C		Adjusting ring	1
3C		Shaft	1
4C		Clamping bush	1
5C	5322 535 14126	Locking pin	1
6C	5322 492 64398	Spring flat	1
7C		Ring	1
8C		Coupling	1
9C	5322 323 24062	Steel wire with nylon imm. Ø, 0,15M	1
10C		Eye cable tag	1
11C	5322 502 14085	Locking screw	1
12C	5322 271 34086	Micro switch assy	2
13C		Connector housing	1
14C	5322 268 14055	Contact pin	4
15C	5322 401 14136	Cable clamp	1
16C	5322 325 64029	Crommet	1
17C	5322 405 54036	Stop bracket	2
18C	5322 535 94658	CAM	1
19C	5322 218 74275	Interference capacitor	1
20C		Connecting block, 2 pins	1
21C		Mounting support	2
22C	4822 121 50524	Capacitor, 0,056 uF	1
23C		Gear box, 125: 3	1
24C		Synchronous motor	1
25C		Adjusting plate	1
26C		Screw, M2x20	2
27C		Screw, M3x30	1
28C		Screw, M3x20	1
29C		Screw, M3x8	2
30C		Screw, M3x4	4
31C		Screw, M4x5	1
32C		Adjusting screw, M3x5	2
33C		Adjusting screw, M4x5	1
34C		Nut, M2	2
35C		Nut, M3	4
36C		Washer, 2,2x5	4
37C		Washer, nylon, 4,3 x 9 x 1	1
38C		Washer, 3,2 x 6	1
39C		Washer, 3,2 x 7	2
40C		Distance piece, 3,1 x 5 x 12	1
41	5322 479 34007	Brush shaft, assy	1

SPINDLE

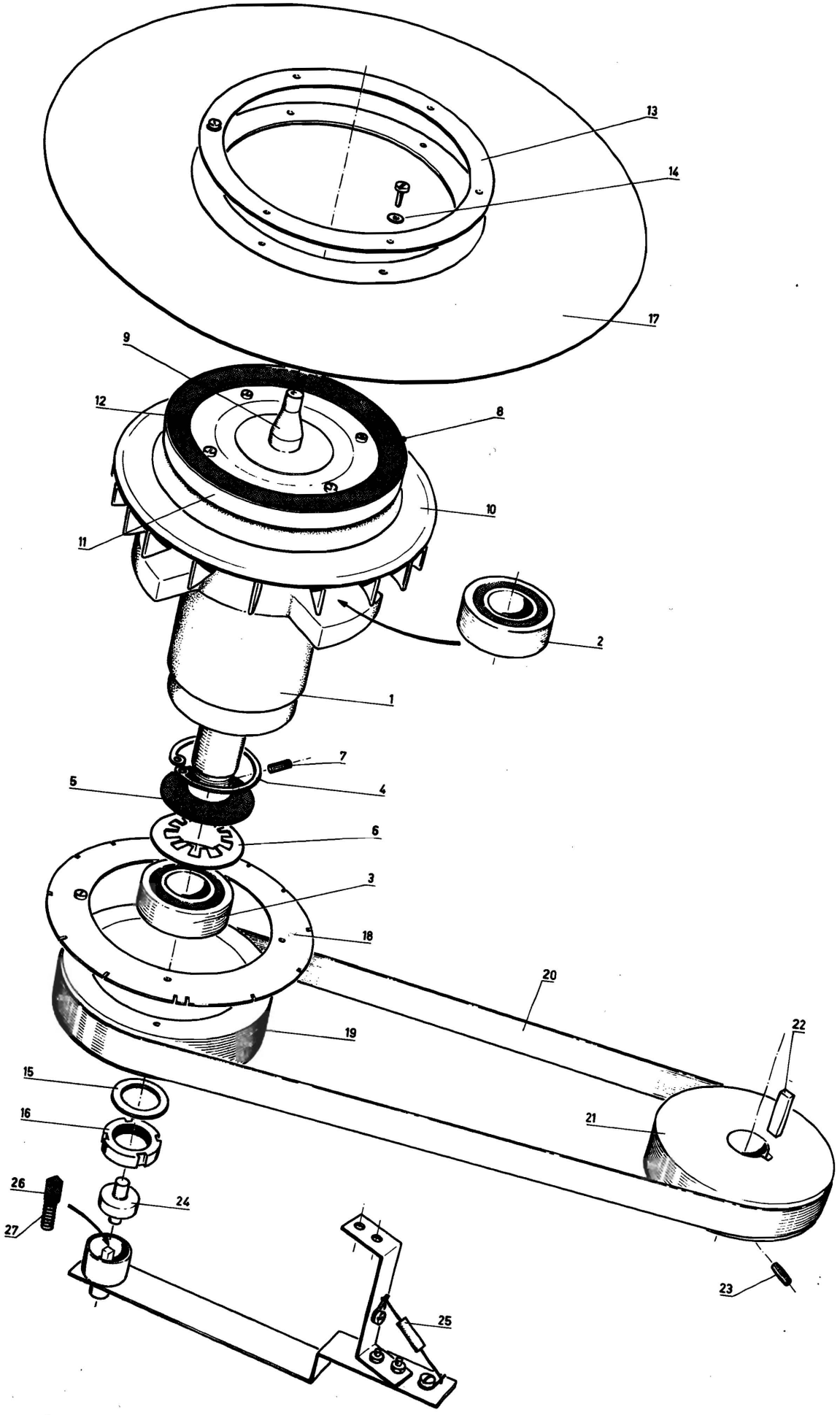

Item nr	Part number	Description	Qty. per ass'y
A		Final assembly	1
B		Main assembly	1
C		Sub assy	1
D	5322 522 34472	Spindle assy, complete	1
1E		Bearing house	1
2E		Ball bearing GMN 6005 up 2Z	1
3E		Ball bearing GMN 6203 P5 2Z	1
4E		Inner retaining ring	1
5E		Ring	1
6E		Star spring 29,7 x 23 x 0,9	1
7E		Adjusting screw M 3 x 4	1
8E		Spindle assy	1
9F		Spindle	1
10F		Carrying disc	1
11F		Magnet holder	1
12F		Magnet ring	1
13C		Clamping disc	1
14C	3522 532 54351	Ring	6
15B		Ring	1
16B		Spindle nut SKF KM/2 M15 x 1	1
17B	5322 397 64004	Memory disc	1
18B		Index ring 16 slots	1
19B	5322 528 94184	Puley	1
20B	5322 358 24081	Belt 50 CS/S	1
21B		Pulley, motor	1
22B		Key, 4 x 4 x 12	1
23B		Set screw	1
24B	5322 218 84109	Discharge contact	1
25C	5322 116 54207	Resistor, 1KO, 1%	1
26C		Carbon brush	1
27C		Spring	1

OPTICAL ZERO UNIT

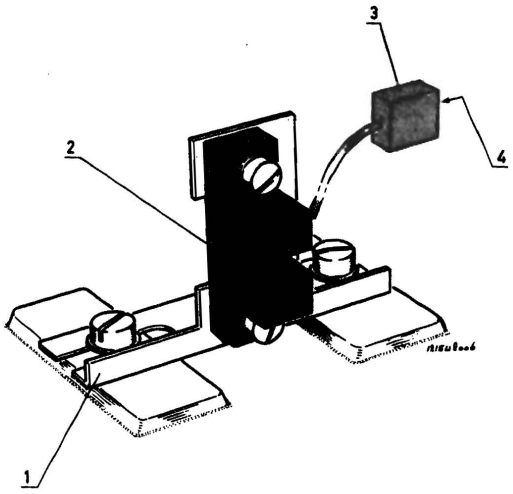

MAGNET HOUSE

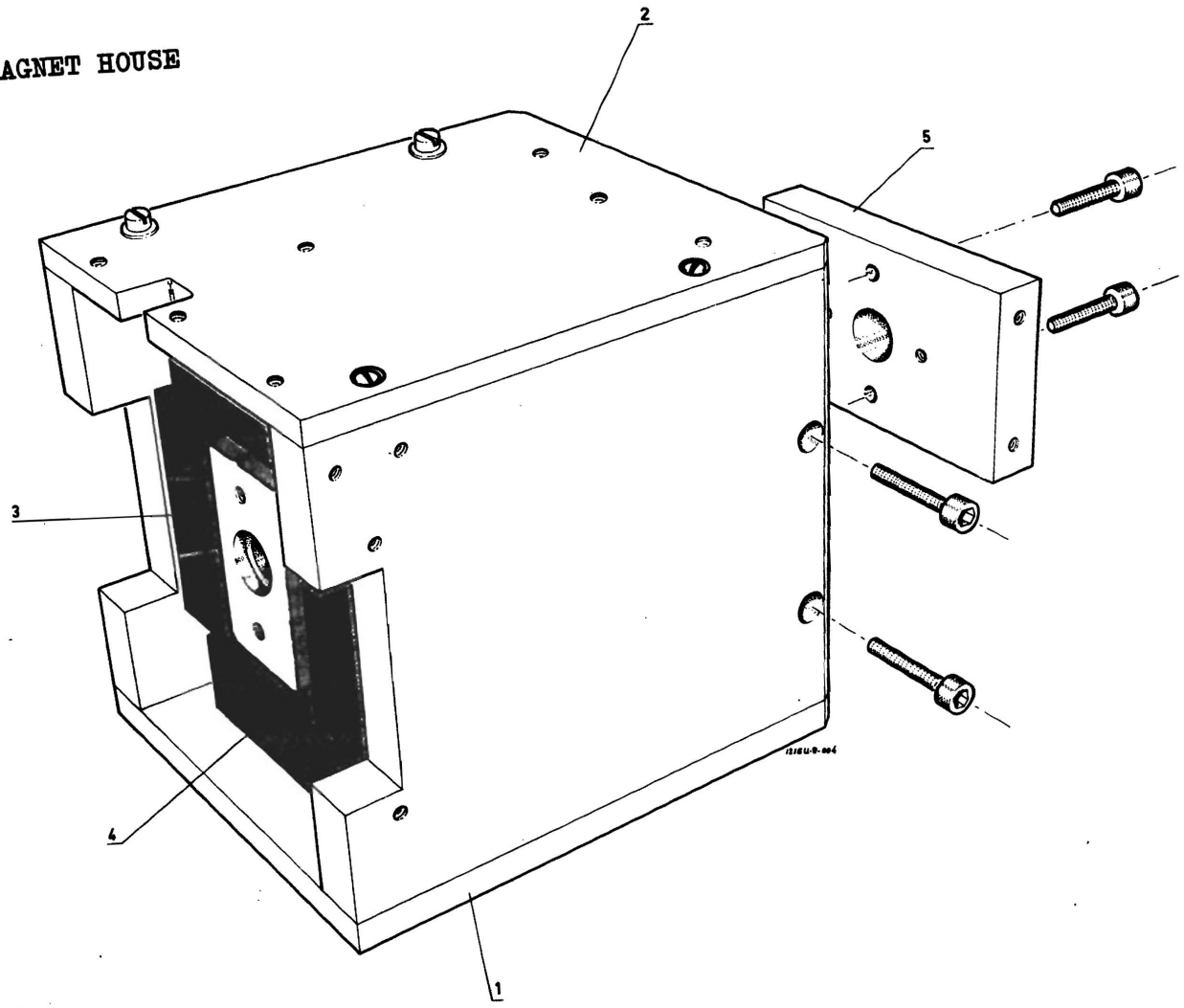

OPTICAL ZERO UNIT

Item nr	Part number	Description	Qty. per ass'y
D		Deck assembly	1
E	5322 218 74395	Optical zero unit	1
1F		Bracket	1
2F		Index pick-up	1
3F		Connector, block	1
4F	5322 268 14055	Pin	6

MAGNET HOUSE

Item nr	Part number	Description	Qty. per ass'y
D		Deck assembly	1
E		Magnet house	1
1F		Core assembly	1
2F		Plate, top	1
3F		Magnet block	480
4F		Magnet block	480
5F		Rear plate	1

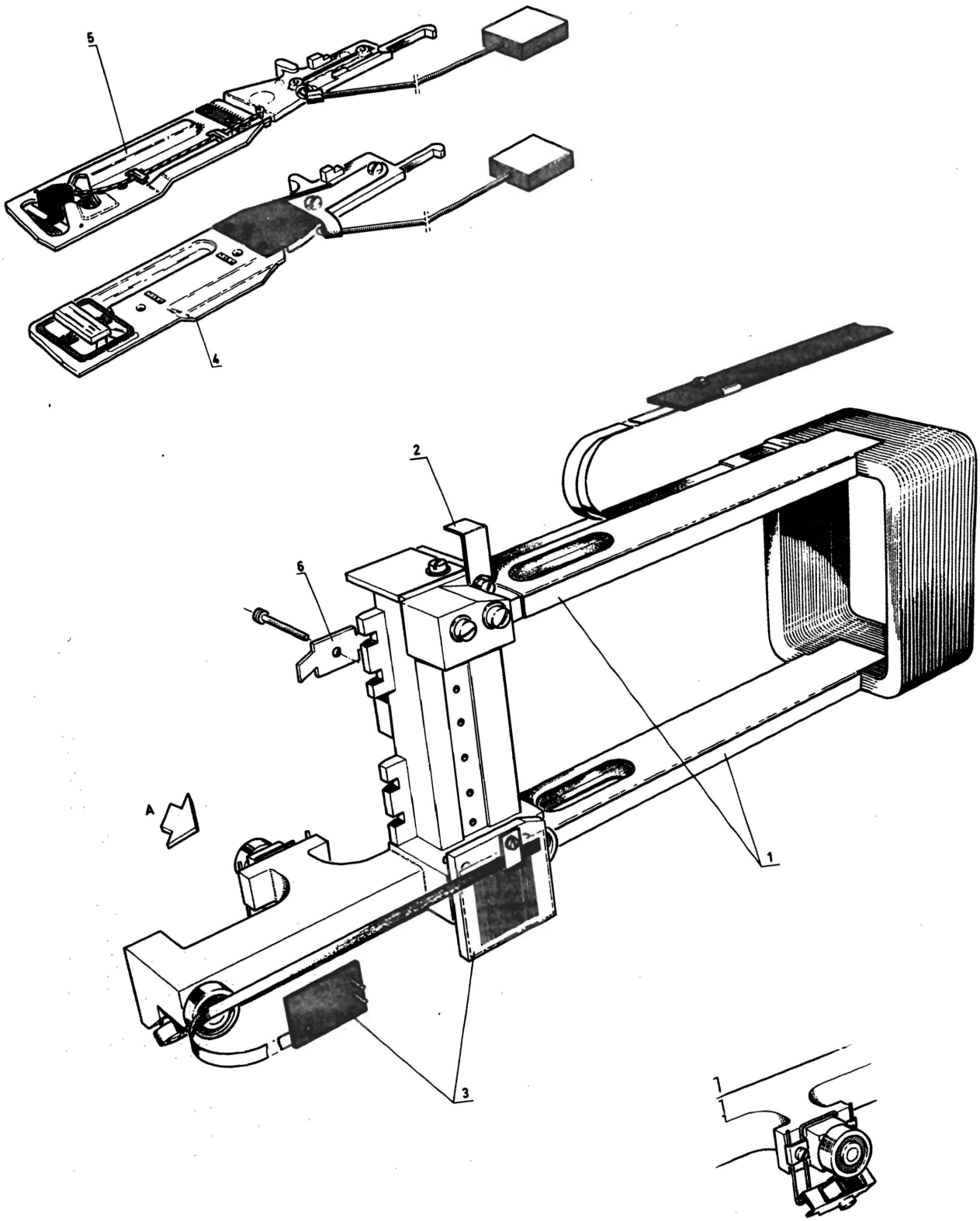

VIEW A

7612

X1215

Item nr	Part number	Description	Qty. per ass'y
A		Final assembly	1
B		Main assembly	1
C		Sub assembly	1
D		Deck assembly	1
E	5322 691 64238	Carriage	1
1F		Coil assembly	1
2F		Vernier	1
3F	5322 218 84111	Primary meander assembly	1
4C	5322 249 14051	Head assembly D-100-2	1
5C	5322 249 14049	Head assembly U-100-2	1
6C	5322 466 85268	Plate, mounting head	6

PRIME AND SEC MEANDER

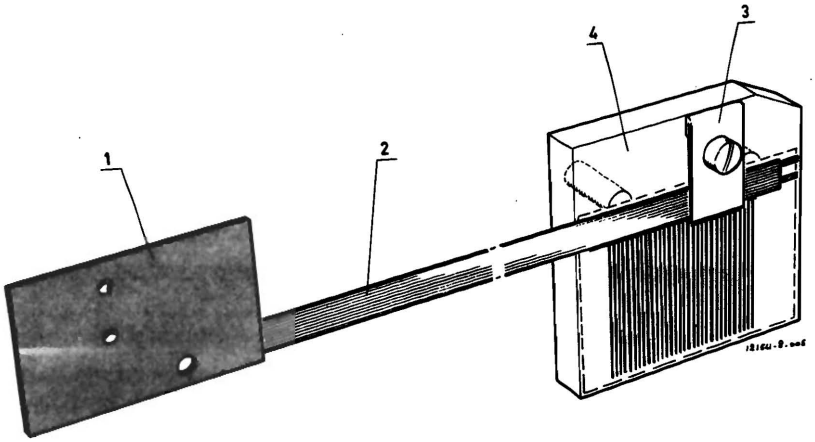

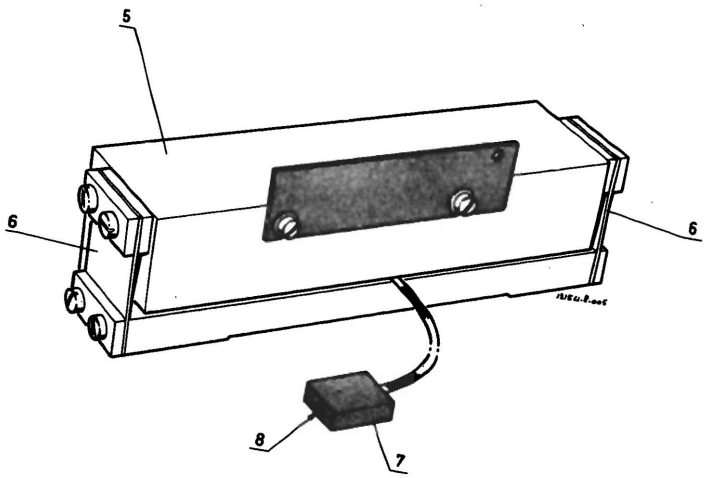

Item nr	Part number	Description	Qty. per ass'y
A		Final assembly	1
B		Main assembly	1
C		Sub assembly	1
D		Deck assembly	1
E		Carriage	1
F	5322 218 84111	Primary meander assembly	1
1G	5322 464 64001	Meander cable assembly	1
2G	5322 322 24005	Flat cable	1
3G		Clamp	1
4G	5322 466 85437	Primary meander plate	1
A		Final assembly	1
B		Main assembly	1
C		Sub assembly	1
D		Deck assembly	1
E	5322 218 84068	Secondary meander assembly	1
5F		Meander block	1
6F		Spring flat	2
7F		Connector, block, 6P	1
8F	5322 268 14055	Pin contact	4

SWITCHING UNIT

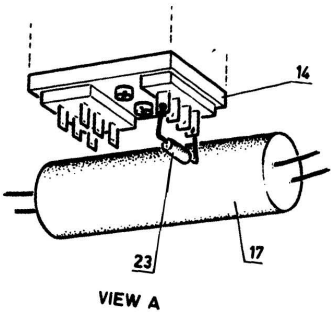

VIEW A

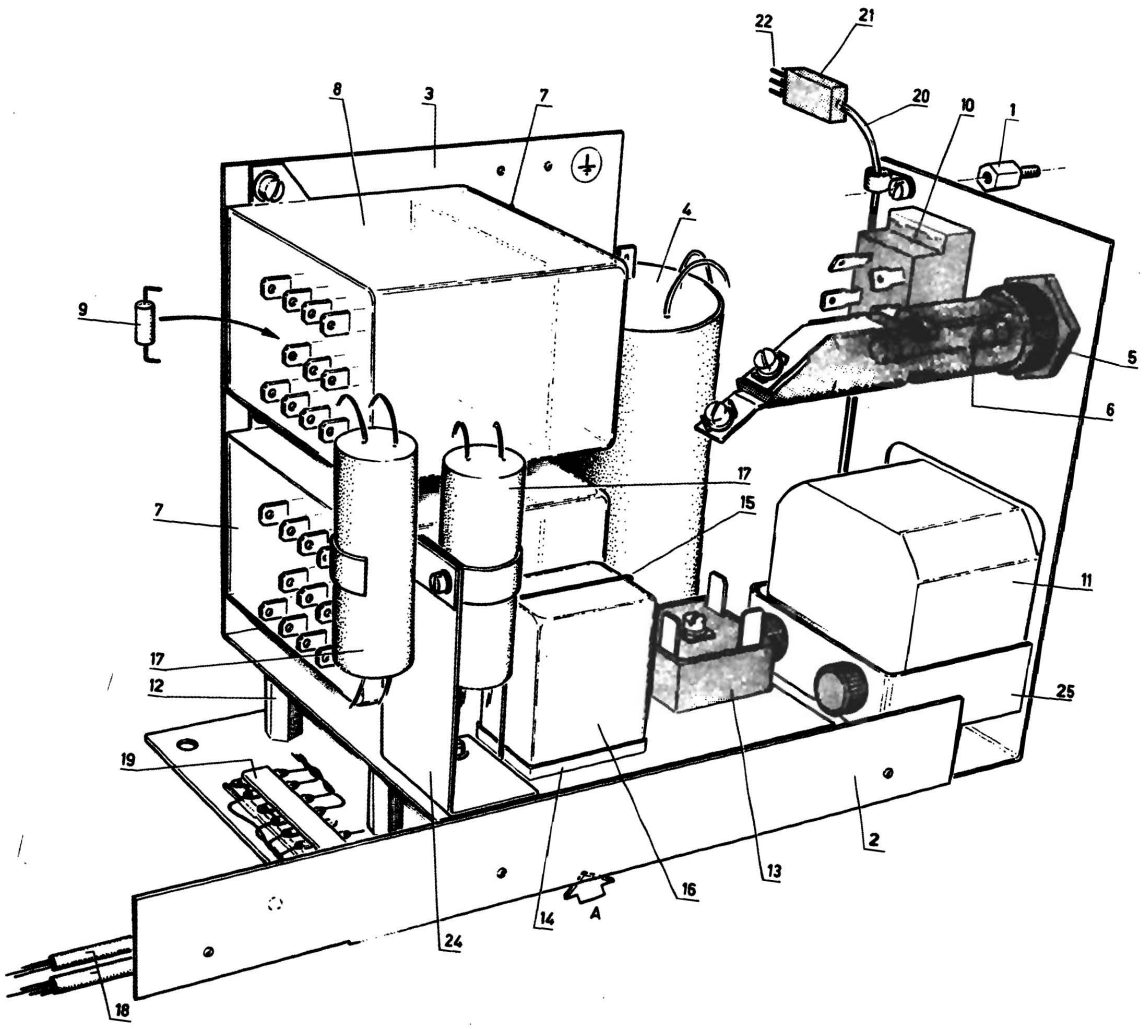

Item nr	Part number	Description	Qty. per ass'y
A		Final assembly	1
B		Main assembly	1
C		Sub assembly	1
D		Frame assembly	1
E		Switching unit	1
1F		Spacer	2
2F		Bracket, hours counter	1
3F		Bracket	1
4F	5322 218 84059	Anti- interference filter	1
5F	5322 256 34033	Holder fuse	1
6F	4822 253 40009	Fuse, 6,3A - 250V	1
7F		Relay, assembly	2
8G	5322 280 74074	Relay, 3 way	1
9G		Diode, BYX36-600	2
10F	5322 277 14184	Toggle switch, 10A	1
11F		Hours counter	1
12F		Spacer, hexagon	3
13F		Bridge rectifier PB40	1
14F	5322 255 60003	Holder, relay	1
15F	5322 492 64397	Clamping spring	1
16F	5322 280 74071	Relay, 2 way	1
17F	5322 218 74275	Anti- interference filter	5
18F		Cable harness	1
19G	5322 290 60028	Mounting support 8pole	1
20F		Cable harness	1
21G		Connector block 6P.	1
22G	5322 268 14055	Pin contact	6
23F		Diode, BYX36-600	1
24F		Filter plate	1
25F		Holding bracket	1

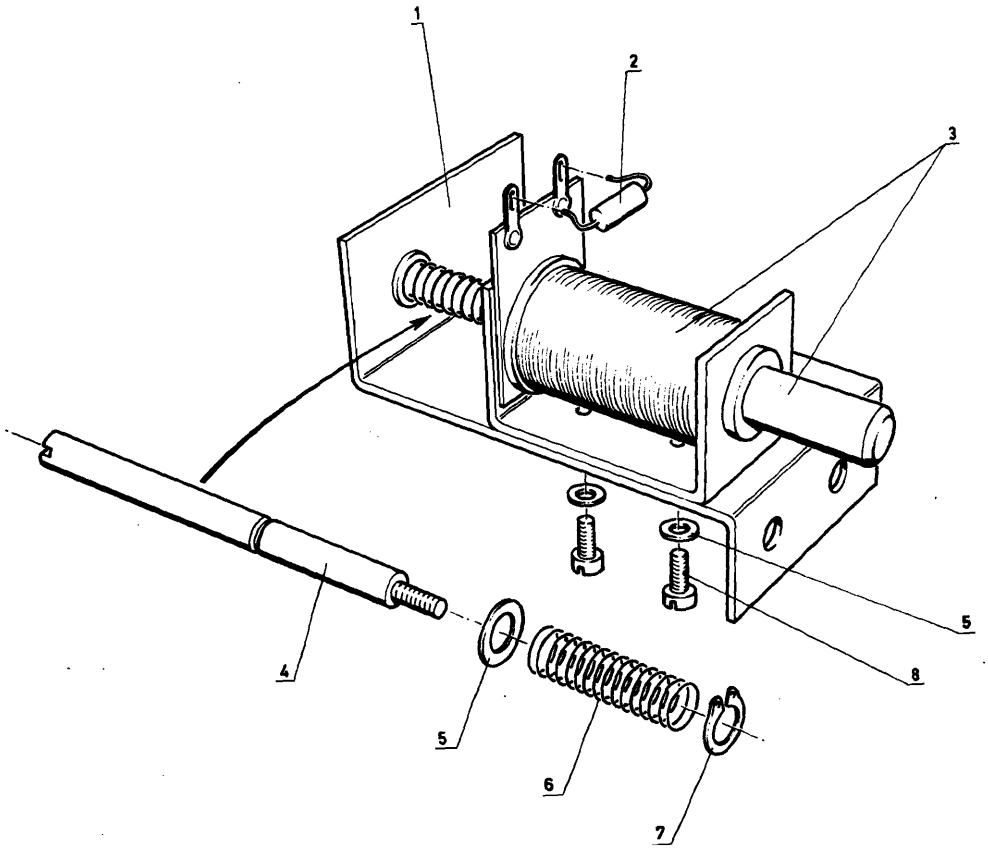
1
2
3
4
5
5
6
7
8

Item nr	Part number	Description	Qty. per ass'y
D	5322 693 24035	Cartridge holder assy	1
E	5322 218 84061	Lock magnet assy	1
1F		Mounting bracket	1
2F	5322 130 30607	Diode BYX 36/600	1
3F		Magnet	1
4F	5322 535 84338	Pin	1
5F		Washer 3,2 x 7 mm	3
6F	5322 492 54249	Compression spring	1
7F		Retaining ring 2,3 mm	1
8F		Screw M3 x 4	2

CONNECTING CABLE

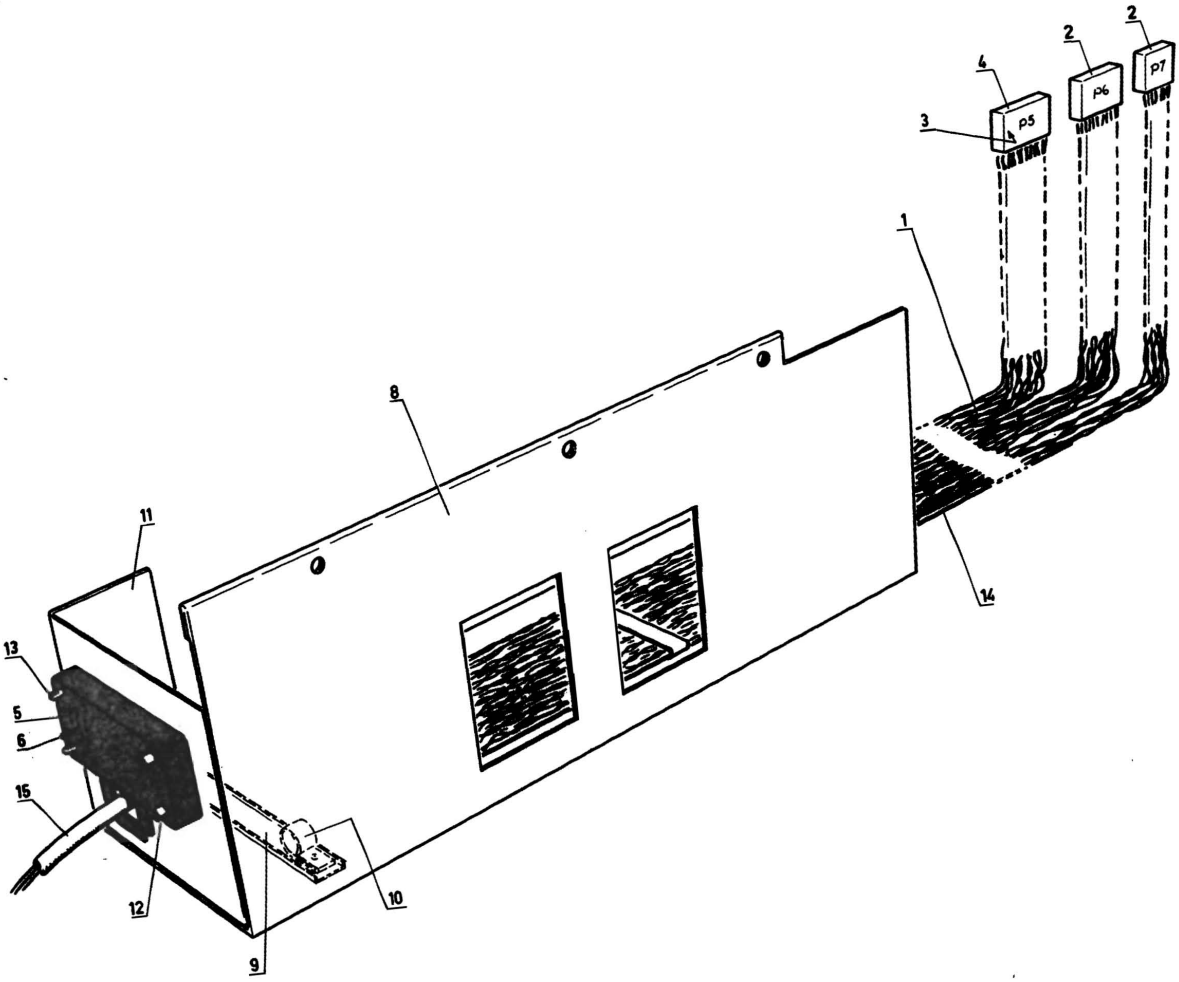

7612

X1215

Item nr	Part number	Description	Qty. per ass'y
A		Final assembly (X1215U)	1
B		Connecting cable assy (Philips)	1
1C	5322 321 24397	Interface table	1
2D		Connector block, 20P	2
3D	5322 268 24041	Buscontact	66
4D		Connector block, 26P	1
5D	5322 268 34007	032 00199 Connector block, 75P	1
6D	5322 321 20074	Bus contact	66
8C		Plate	1
9C		Strip	1
10C	5322 401 14129	Cable clamp	2
11C		Connector plate assy	1
12C		Guide socket	2
13C		Guide pin	2
14C		Guide plate	1
15C		Mains cable (See sub assy X1215/16)	1

PCBA 1A28

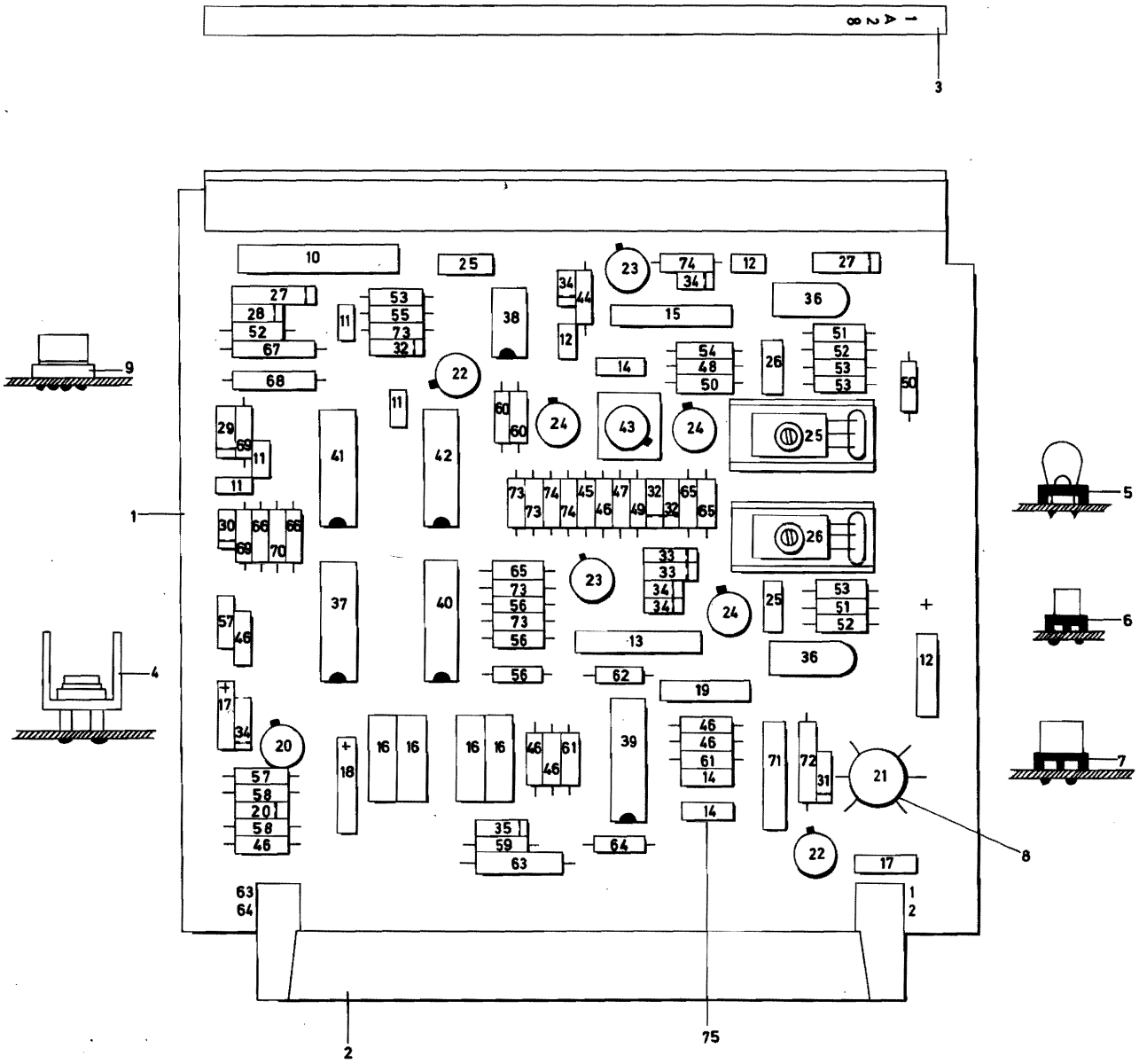
8 2 A 1
3
10
25
23
74
34
12
27
36
15
38
44
53
55
73
32
11
22
14
54
48
50
26
51
52
53
53
50
68
60
24
43
24
25
29
69
11
41
42
11
73
74
45
47
32
65
73
74
46
49
32
65
30
66
66
69
70
26
33
33
34
34
65
73
56
73
56
23
24
25
53
51
52
37
40
57
46
13
36
12
56
62
19
17
34
20
16
16
16
16
46
61
46
46
39
71
72
31
21
57
58
20
58
46
18
35
59
63
64
14
22
17
63
64
1
2
2
75
8
9
1
4
5
6
7

Item nr	Part number	Description	Qty. per ass'y
A		Final assembly	1
B		Main assembly	1
C	5322 216 24961	PCBA 1A28	1
1D		Panel 2162	1
2D	5322 267 70072	Connector, 64 pin	2
3D		Textstrip	1
4D	5322 255 44064	Heatsink	2
5D	5322 256 94045	Foot, capacitor	6
6D		Foot, transistor	8
7D	5322 255 44056	Foot, transistor	1
8D	5322 255 44093	Cooling, star	1
9D	5322 255 44102	Converter, TO-99	1
10D		Capacitor, 4MU7, 40V	1
11D		Capacitor, 10N	3
12D		Capacitor, 33MU, 10V	3
13D		Capacitor, 330N	1
14D		Capacitor, 22N	3
15D		Capacitor, 470N	1
16D		Capacitor, 100N	4
17D		Capacitor, 3MU3, 20%	2
18D		Capacitor, 6MU8, 20%	1
19D		Capacitor, 10N	1
20D			
21D	5322 130 40714	Transistor, BSW67	2
22D	5322 130 44073	Transistor, BCY59	2
23D	5322 130 40324	Transistor, BCY70	2
24D	5322 130 44017	Transistor, BSV79	3
25D	5322 130 40824	Transistor, BD140	3
26D	5322 130 40823	Transistor, BD139	2
27D	5322 130 30607	Diode, BYX36-600	2
28D	5322 130 30392	Diode, BZY88-C3V3	1
29D	5322 130 34048	Diode, BZX75-C2V8	1
30D	5322 130 30773	Diode, BZX79-C4V7	1
31D	5322 130 30509	Diode, BZY88-C4V3	1
32D	5322 130 34047	Diode, BZX75-C1V4	2
33D	5322 130 30765	Diode, BZX75-C3V6	2
34D	5322 130 30613	Diode, BAW62	4
35D	5322 130 30766	Diode, BZX79-C6V2	1
36D	5322 130 30192	Diode, BY26	2
37D	5322 209 84341	Integrated circuit, SN74132	1
38D		Integrated circuit, SN75452P	1
39D	5322 209 84603	Integrated circuit, LM1414N	1
40D	5322 209 80242	Integrated circuit, SN7405N	1
41D	5322 209 84049	Integrated circuit, SN7413N	1
42D	5322 209 84528	Integrated circuit, SN7400N	1
43D	5322 209 84342	Integrated circuit, TBA221	1
44D		Resistor, 8K25, 1%	1
45D		Resistor, 681E, 1%	1
46D		Resistor, 1KO, 1%	7
47D		Resistor, 4K64, 1%	1
48D		Resistor, 10K, 1%	1
49D		Resistor, 10E, 1%	1
50D		Resistor, 3K83, 1%	2
51D		Resistor, 316E, 1%	2
52D		Resistor, 46E4, 1%	3
53D		Resistor, 100E, 1%	4
54D		Resistor, 82E5, 1%	1
55D		Resistor, 2K61, 1%	1
56D		Resistor, 6K81, 1%	3
57D		Resistor, 5K62, 1%	2
58D		Resistor, 56K2, 1%	2
59D		Resistor, 178E, 1%	1
60D		Resistor, 21E5, 1%	1
61D		Resistor, 31K6, 1%	2
62D		Resistor, 17K8, 1%	1
63D		Resistor, 562E, 1%	1
64D		Resistor, 121K, 1%	1
65D		Resistor, 215E, 1%	3
66D		Resistor, 1K47, 1%	2
67D		Resistor, 10K, 1%	1
68D	5322 116 54207	Resistor, 1KO, 1%	1
69D		Resistor, 464E, 1%	2
70D		Resistor, 1K21, 1%	1
71D		Resistor, 180E, 1%	1
72D	5322 116 50484	Resistor, 4K64, 1%	1
73D		Resistor, 2K15, 1%	2
74D		Resistor, 46K4, 1%	2
75D		Bead, glass	6

PCBA INTERFACE 2L00

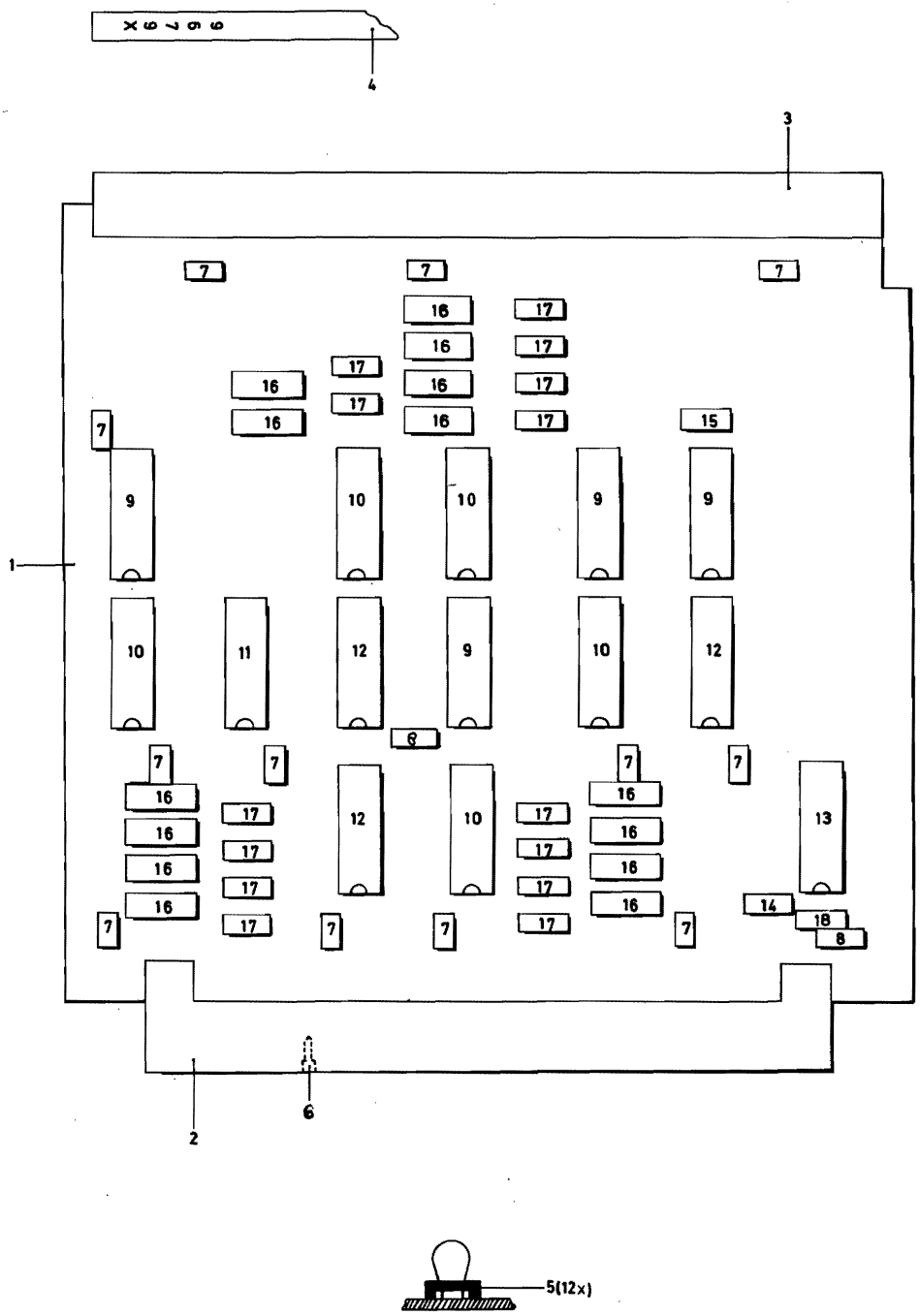

Item nr	Part number	Description	Qty. per ass'y
A		Final assembly	1
B		Main assembly	1
C	5322 216 24495	PCBA, interface - 2L00	1
1D		Board, 4246	1
2D	5322 267 70072	Connector, 64-pole, F054	1
3D		Front-strip	1
4D		Text-strip	1
5D	5322 256 94045	Base, capacitor	12
6D		Pin, locking	1
7D		Capacitor, CER, 10.000pF, -20/+100% 40V	12
8D		Capacitor, Electrolyte Tantalium, 3,3/uF, 20%, 15V	1
9D	5322 209 84528	Integrated circuit, SN7400N	4
10D	5322 209 84341	Integrated circuit, SN74132N	4
11D	5322 209 80148	Integrated circuit, SN7404N	2
12D	5322 209 84285	Integrated circuit, SN7438N	3
13D	5322 209 80228	Integrated circuit, SN74H00N	1
14D		Resistor, 31,6 ohm, 1% 125mW	1
15D		Resistor, 825 ohm, 1% 125mW	2
16D		Resistor, 147 ohm, 1% 250mW	14
17D		Resistor, 562 ohm, 1% 125mW	14
18D		Resistor, 3K83, 1% 125mW	1

PCBA 3Loo

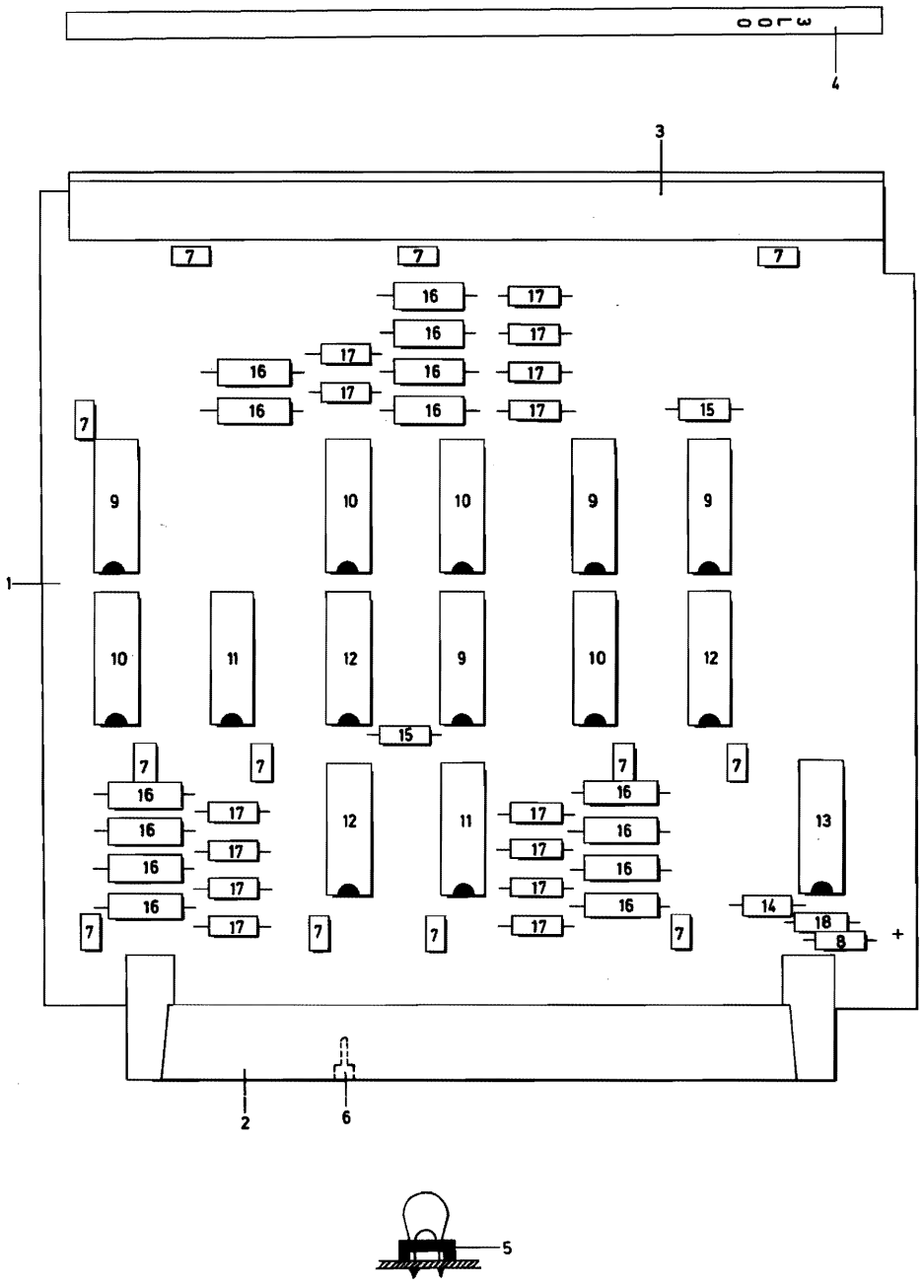

Item nr	Part number	Description	Qty. per ass'y
A		Final assembly	1
B		Main assembly	1
C	5322 216 24653	PCBA 3L00	1
1D		Panel 4343	
2D	5322 267 70072	Connector	1
3D		Grip	1
4D		Textstrip	1
5D	5322 256 94045	Foot capacitor	12
6D		Key	1
7D		Capacitor ION	11
8D		Capacitor, 3MV3 20%	1
9D	5322 209 84528	Integrated circuit SN7400N	4
10D	5322 209 84341	Integrated circuit SN74132N	4
11D	5322 209 80148	Integrated circuit SN7404N	2
12D	5322 209 84285	Integrated circuit SN7438N	3
13D		Integrated circuit SN74S 132N	1
14D		Resistor 178E 1%	1
15D		Resistor 825E 1%	1
16D		Resistor 147E 1%	14
17D		Resistor 562E 1%	14
18D		Resistor 121E 1%	1

PCBA 3L54 - FI

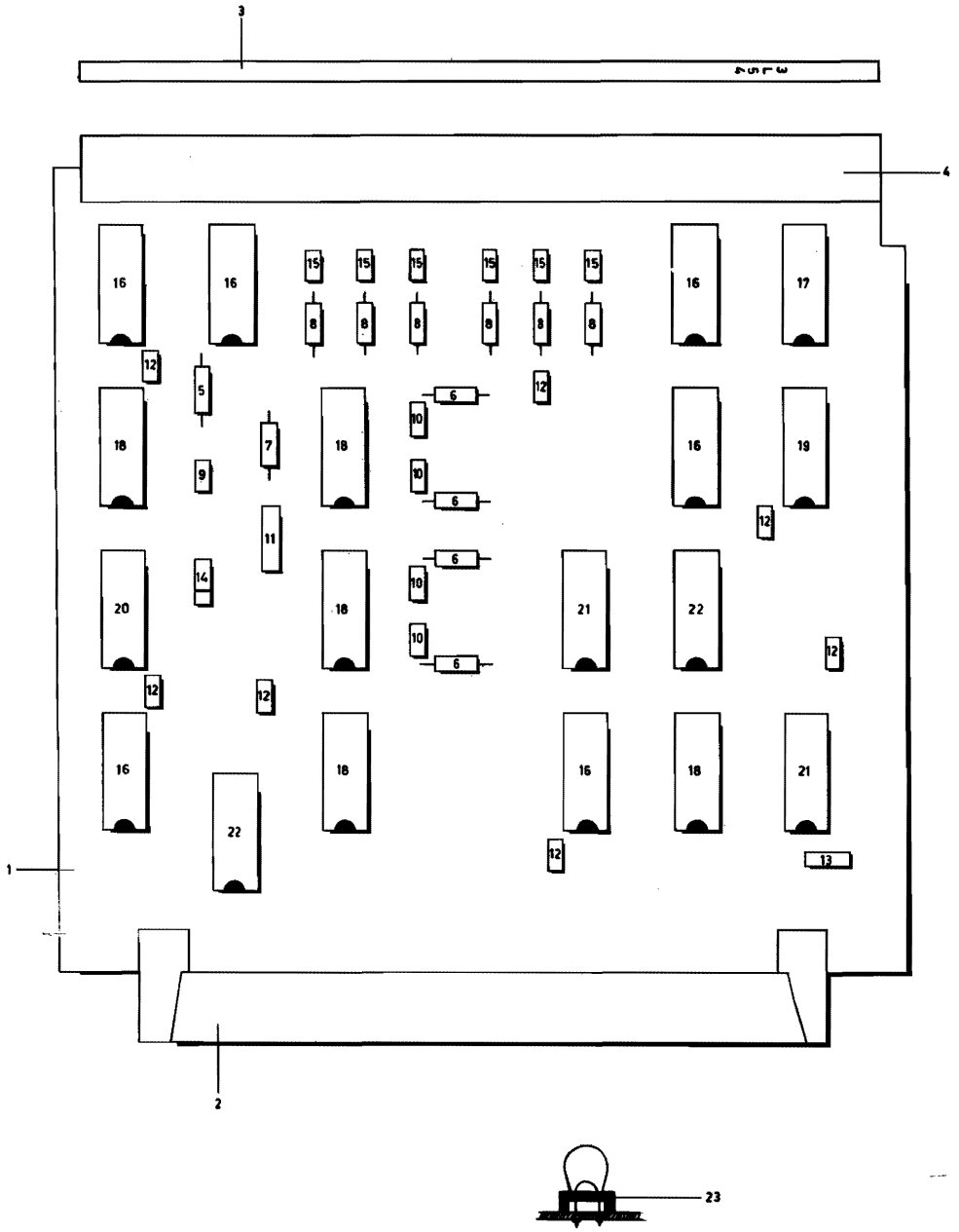

Item nr	Part number	Description	Qty. per ass'y
B	5322 216 24592	PCBA, 3L54	1
1C		BOARD 4344	1
2C	5322 267 70072	CONNECTOR, 64-POLE	1
3C		FRONTSTRIP	1
4C		TEXT-STRIP	1
5C		RESISTOR, 10K, 1%	1
6C		RESISTOR, 14K7, 1%	1
7C		RESISTOR, 5K62, 1%	1
8C		RESISTOR, 147E, 1%	1
9C		CAPACITOR, 0,015K, 50V	1
10C		CAPACITOR, 2N2	1
11C		CAPACITOR, 3MU3, 20%	1
12C		CAPACITOR, 10N	1
13C		CAPACITOR, 4MU7, 20%	1
14C	5322 130 30613	DIODE, BAW62	1
15C	5322 130 34408	L.E.D. 555-2001	1
16C	5322 209 84528	I.C., SN7400N	6
17C	5322 209 84531	I.C., SN7420N	1
18C	5322 209 84194	I.C., SN74123N	5
19C	5322 209 80077	I.C., SN7410N	1
20C	5322 209 84231	I.C., SN74122N	1
21C	5322 209 84165	I.C., SN7474N	2
22C	5322 209 80148	I.C., SN7404N	2
23C	5322 256 94045	FOOT, CAPACITOR	11

PCBA 3L57

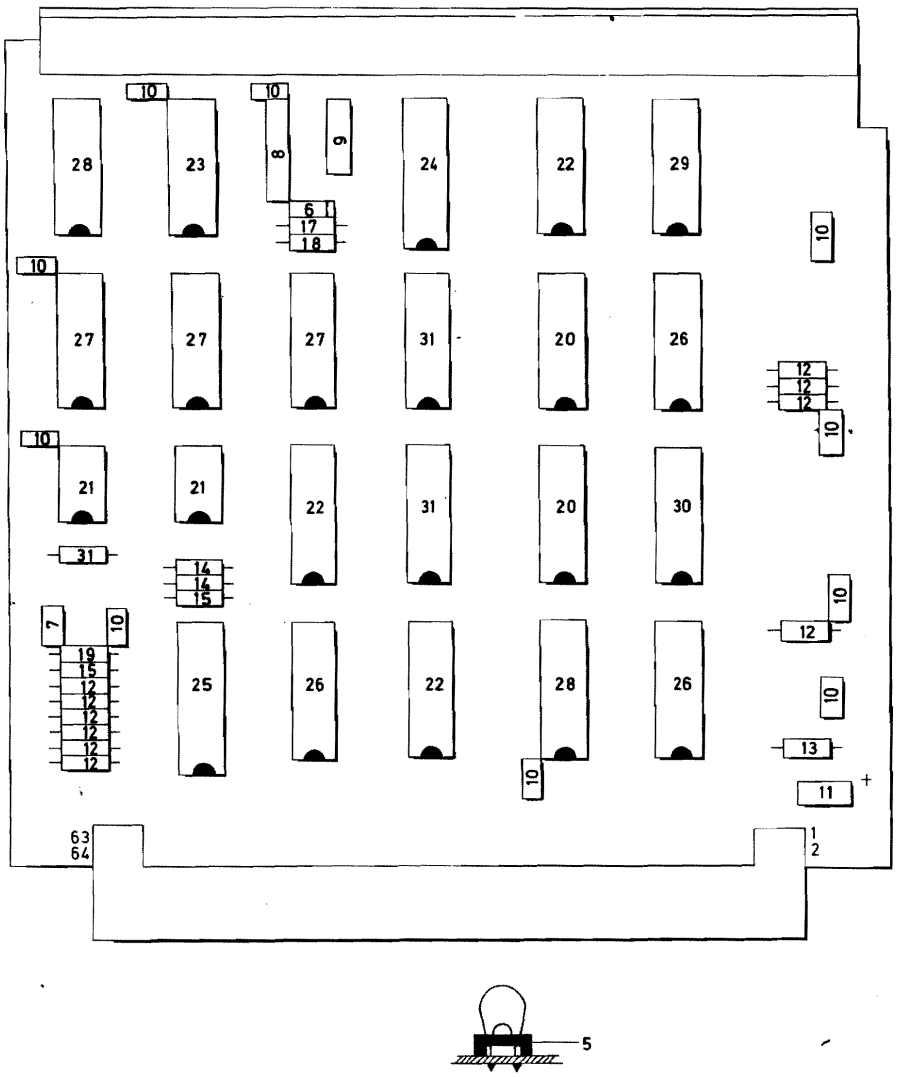
28
23
8
9
24
22
29
6
17
18
27
27
27
31
20
26
21
21
22
31
20
30
31
14
14
15
7
19
15
12
12
12
12
12
12
25
26
22
28
26
13
11
63
64
1
2

5

Item nr	Part number	Description	Qty. per ass'y
A		Final assembly	1
B		Main assembly	1
C	5322 216 24958	PCBA 3L57	1
1D		Panel 4364	1
2D	5322 267 70072	Connector, 64P	1
3D		Grip	1
4D		Textstrip	1
5D	5322 256 94045	Foot capacitor	11
6D	5322 130 40182	Diode, BAX13	1
7D		Capacitor, 1N5	1
8D		Capacitor, 100N	1
9D		Capacitor, 4MU7, 15V	1
10D		Capacitor, 4700pF	3
11D		Capacitor, 3MU3, 20%	1
12D		Resistor, 825E, 1%	10
13D		Resistor, 121E, 1%	2
14D		Resistor, 383E, 1%	2
15D		Resistor, 21E5, 1%	2
16D			
17D		Resistor, 31K6 1%	1
18D		Resistor, 17K8, 1%	1
19D		Resistor, 38K3, 1%	1
20D	5322 209 84181	Integrated circuit, SN7454N	2
21D		Integrated circuit, SN75452P	2
22D	5322 209 80151	Integrated circuit, SN7408N	3
23D	5322 209 84017	Integrated circuit, SN74121N	1
24D	5322 209 84194	Integrated circuit, SN74123N	1
25D		Integrated circuit, SN74279N	1
26D	5322 209 84528	Integrated circuit, SN7400N	3
27D	5322 209 84516	Integrated circuit, SN74197N	3
28D	5322 209 84227	Integrated circuit, SN7402N	2
29D	5322 209 80148	Integrated circuit, SN7404N	1
30D	5322 209 80077	Integrated circuit, SN7410N	1
31D	5322 209 84165	Integrated circuit, SN7474N	2

PCBA 3L58

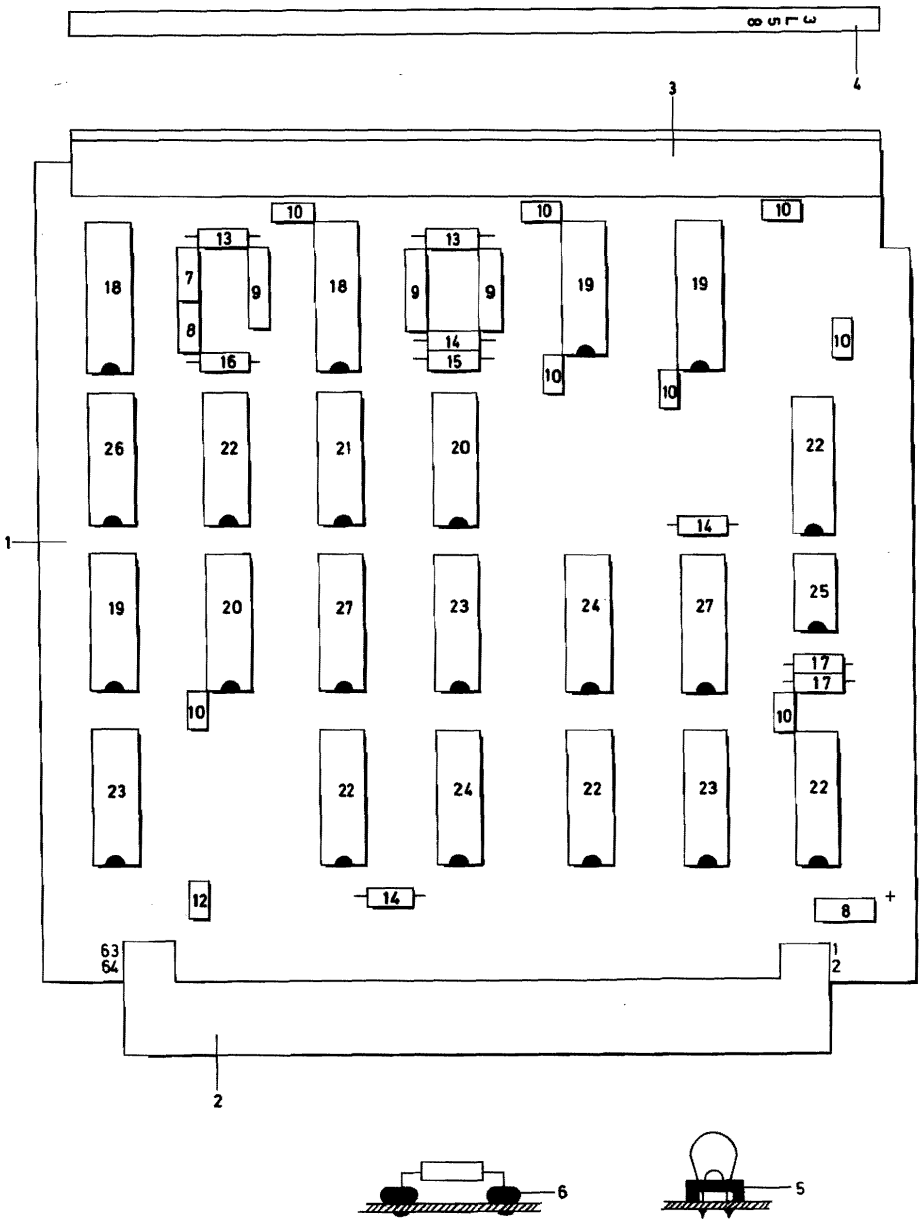
3
4
1
2
63
64
1
2
+
18
18
19
19
26
22
21
20
22
19
20
27
23
24
27
25
23
22
24
22
23
22
7
8
9
13
16
14
15
12
10
17
6
5

Item nr	Part number	Description	Qty. per ass'y
A		Final assembly	1
B		Main assembly	1
C	5322 216 24957	PCBA 3L58	1
1D		Panel 4365	1
2D	5322 267 70072	Connector, 64P	1
3D		Grip	1
4D		Textstrip	1
5D	5322 256 94045	Foot, capacitor	9
6D		Bead, glass	4
7D		Capacitor, 10N, 10%, 50V	1
8D		Capacitor, 15N, 50V	1
9D		Capacitor, 100N	3
10D		Capacitor, 10N	2
11D		Capacitor, 3MU3, 20%	1
12D		Capacitor, 1500pF	1
13D		Resistor, 31K6, 1%	1
14D		Resistor, 825E, 1%	3
15D		Resistor, 38K3, 1%	1
16D		Resistor, 12K1, 1%	1
17D		Resistor, 383E, 1%	2
18D	5322 209 84194	Integrated circuit, SN74123N	2
19D	5322 209 84165	Integrated circuit, SN7474N	2
20D	5322 209 84868	Integrated circuit, SN74279N	1
21D	5322 209 84531	Integrated circuit, SN7420N	1
22D	5322 209 84528	Integrated circuit, SN7400N	5
23D	5322 209 80077	Integrated circuit, SN7410N	3
24D	5322 209 80151	Integrated circuit, SN7408N	2
25D		Integrated circuit, SN75452P	1
26D	5322 209 84201	Integrated circuit, SN7486N	1
27D	5322 209 84227	Integrated circuit, SN7402N	2

PCBA 4L99

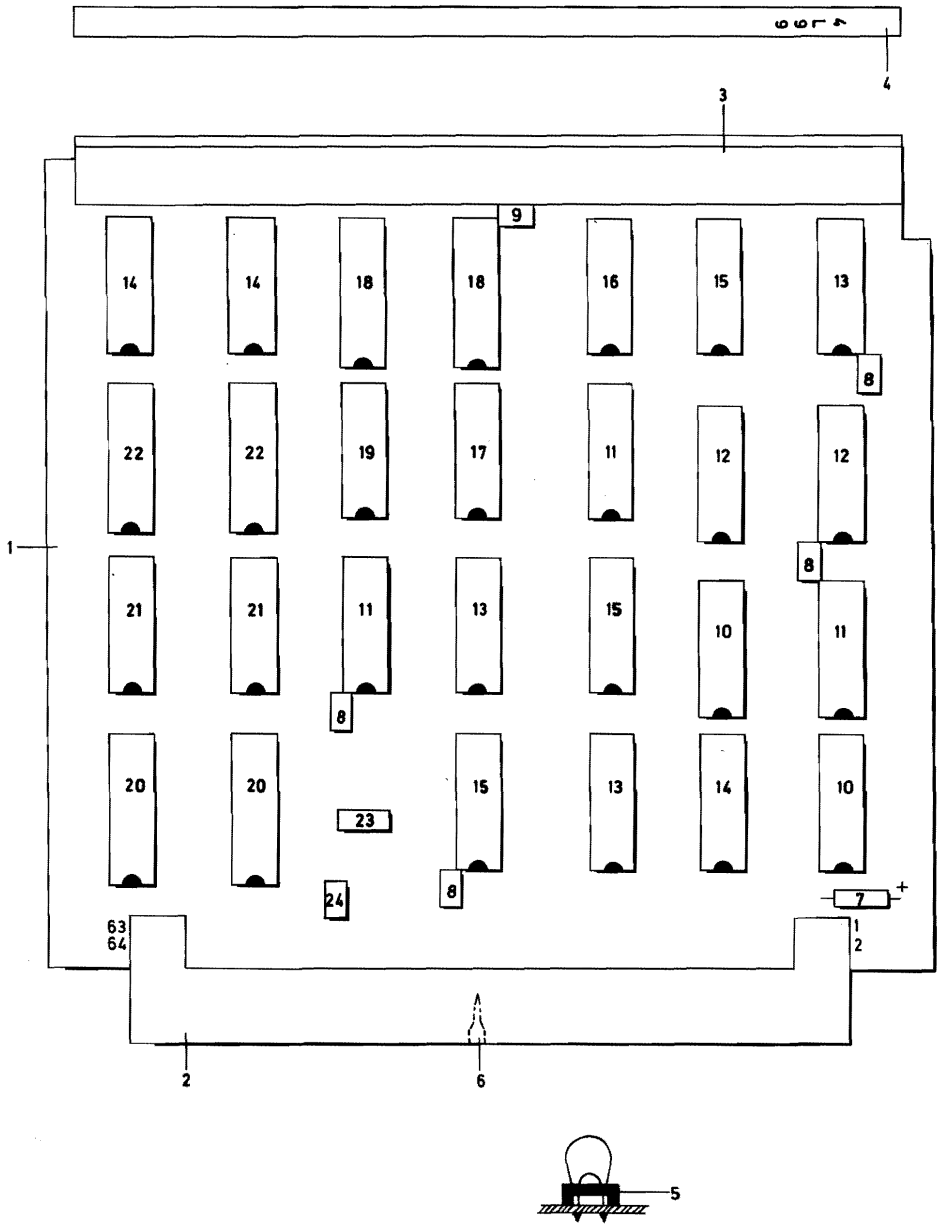
4
3
9
14
14
18
18
16
15
13
8
22
22
19
17
11
12
12
1
8
21
21
11
13
15
10
11
8
20
20
15
13
14
10
23
24
8
7
+
63
64
1
2
2
6
5

Item nr	Part number	Description	Qty. per ass'y
A		Final assembly	1
B		Main assembly	1
C	5322 216 24694	PCBA 4L99	1
1D		Panel 4383	1
2D	5322 267 70072	Connector	1
3D		Grip	1
4D		Textstrip	1
5D	5322 256 94045	Foot, capacitor	5
6D		Key	1
7D		Capacitor, 3MU3, 20%	1
8D		Capacitor, 10N	4
9D		Capacitor, 2N2	1
10D	5322 209 84227	Integrated circuit, SN7402N	2
11D	5322 209 80148	Integrated circuit, SN7404N	3
12D	5322 209 80242	Integrated circuit, SN7454N	2
13D	5322 209 84528	Integrated circuit, SN7400N	3
14D	5322 209 84201	Integrated circuit, SN7486N	3
15D	5322 209 84165	Integrated circuit, SN7474N	3
16D	5322 209 84678	Integrated circuit, SN7482N	1
17D	5322 209 84531	Integrated circuit, SN7420N	1
18D	5322 209 84403	Integrated circuit, SN74191N	2
19D	5322 209 80138	Integrated circuit, SN7430N	1
20D	5322 209 80059	Integrated circuit, SN7475N	2
21D	5322 209 84516	Integrated circuit, SN74197N	1
22D	5322 209 80144	Integrated circuit, SN7483N	2
23D	5322 116 54469	Resistor, 100 Ohm	1
24D		Capacitor, 1N8	1

PCBA 5M03

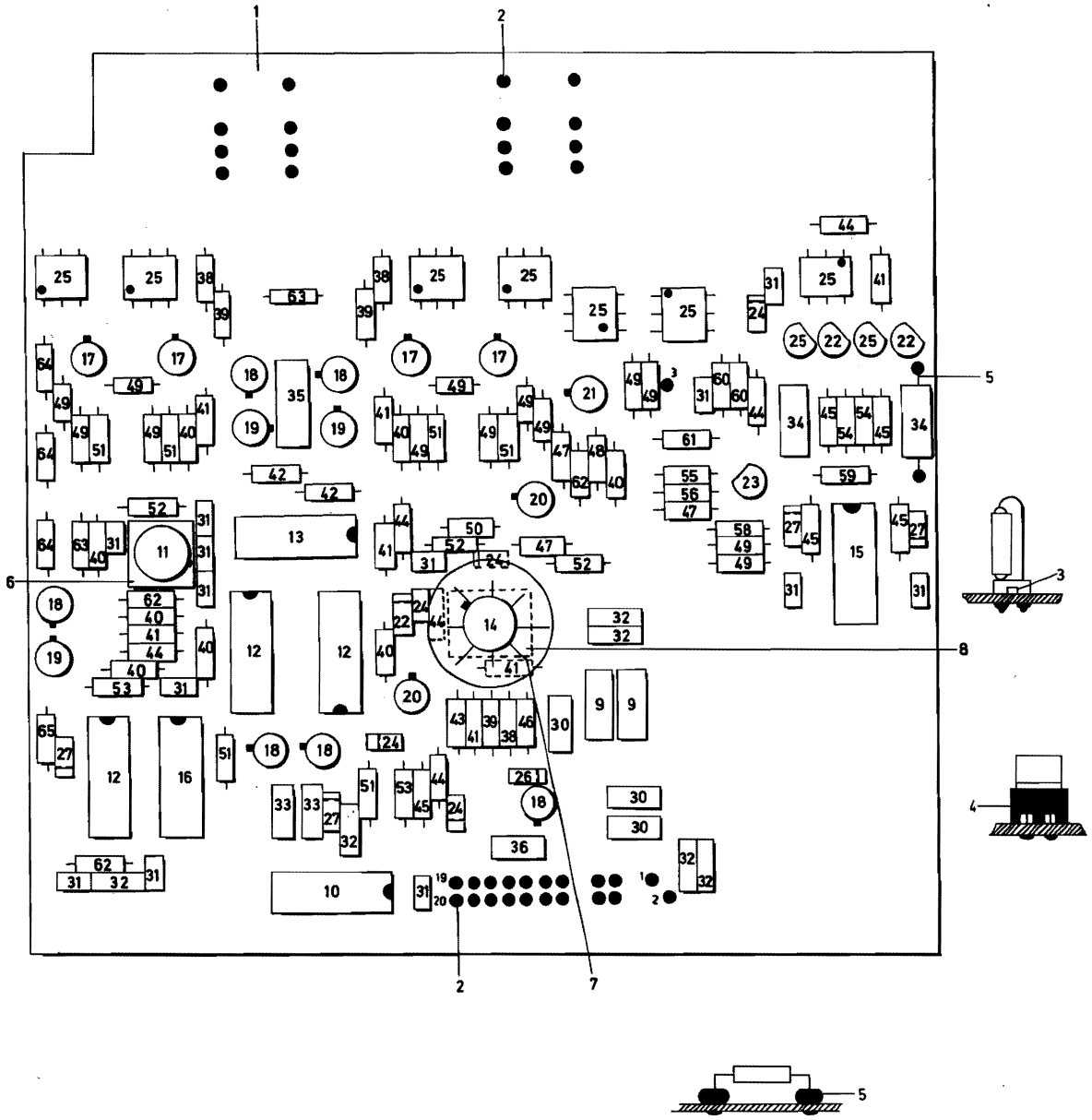

Item nr	Part number	Description	Qty. per ass'y
A		Final assembly	1
B		Main assembly	1
C	5322 216 25017	PCBA 5M03	1
1D		Panel 6047	1
2D	5322 268 14059	Pin	37
3D	5322 256 94045	Foot, capacitor	17
4D	5322 255 44002	Foot, transistor	16
5D		Bead, glass	24
6D	5322 255 44102	Converter, TO-99	1
7D	5322 255 40079	Cooling ring	1
8D	5322 255 44097	Converter, TO-100	1
9D	5322 158 10243	Choke, 100UH	2
10D	5322 209 84036	Integrated circuit, SN7417	1
11D		Integrated circuit, 710HC	1
12D		Integrated circuit, 711DC	2
13D	5322 209 84918	Integrated circuit, SN74S114N	1
14D		Integrated circuit, 723HC	1
15D	5322 209 84916	Integrated circuit, 733DC	1
16D	5322 209 84049	Integrated circuit, SN7413N	1
17D	5322 130 44502	Transistor, 2N2906	1
18D	5322 130 40417	Transistor, BSX20	5
19D	5322 130 40205	Transistor, BSX29	2
20D	5322 130 40324	Transistor, BCY70	2
21D	5322 130 44115	Transistor, 2N2222A	1
22D		Transistor, BE240	2
23D	5322 130 44195	Transistor, BF494	1
24D	5322 130 30613	Diode, BAW62	2
25D	5322 130 34391	Diode, 512BAY	7
26D	5322 130 34047	Diode, BZX75-C1V4	1
27D	5322 130 30766	Diode, BZX79-C6V2	2
28D	5322 130 34069	Diode, BZX79-C12	1
29D		Capacitor, 100P	2
30D		Capacitor, OMU1, 50V	4
31D		Capacitor, 10N	2
32D		Capacitor, 22N	1
33D		Capacitor, 10N, 50V, 10%	1
34D		Capacitor, 6N8	1
35D		Capacitor, 22N	1
36D		Capacitor, 4MU7, 20%	1
37D		Capacitor, 680P	1
38D		Resistor, 121E, 1%	3
39D		Resistor, 147E, 1%	3
40D		Resistor, 681E, 1%	5
41D		Resistor, 4K64, 1%	6
42D		Resistor, 8E25, 1%	1
43D		Resistor, 2K61, 1%	1
44D		Resistor, 2K15, 1%	5
45D		Resistor, 1K78, 1%	3
46D		Resistor, 21K5, 1%	1
47D		Resistor, 5K62, 1%	3
48D		Resistor, 82E5, 1%	1
49D		Resistor, 1K21, 1%	10
50D		Resistor, 1K0, 1%	1
51D		Resistor, 6K81, 1%	6
52D		Resistor, 100E, 1%	2
53D		Resistor, 316E, 1%	2
54D		Resistor, 8K25, 1%	2
55D		Resistor, 31K6, 1%	1
56D		Resistor, 10K , 1%	1
57D			
58D		Resistor, 178E, 1%	1
59D		Resistor, 261E, 1%	1
60D		Resistor, 1K47, 1%	2
61D		Resistor, 12K1, 1%	1
62D		Resistor, 3K83, 1%	2
63D		Resistor, 14K7, 1%	2
64D		Resistor, 68E1, 1%	3

PCBA 2M26

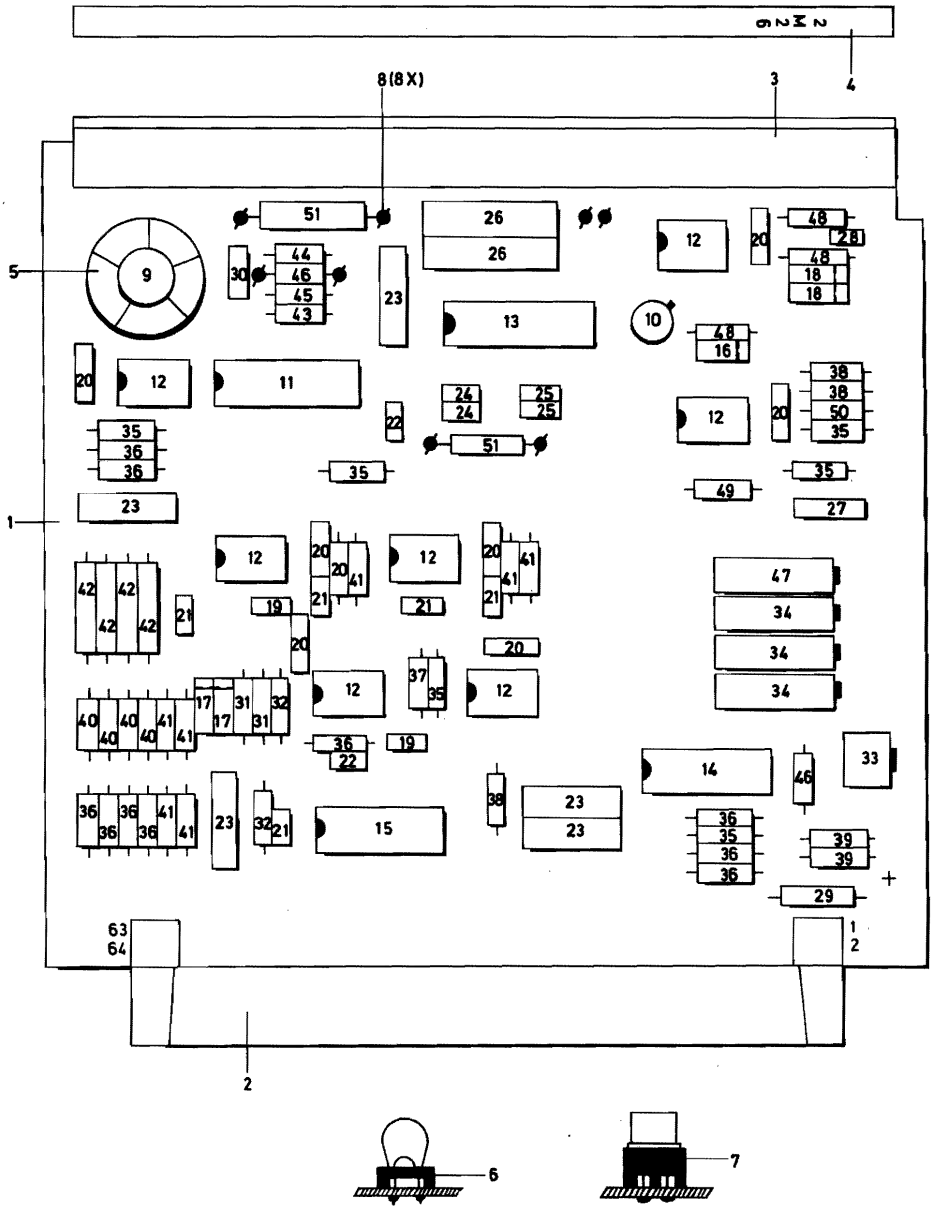

Item nr	Part number	Description	Qty. per ass'y
A		Final assembly	1
B		Main assembly	1
C	5322 216 24959	PCBA 2M26	1
1D		Panel 2161	1
2D	5322 267 70072	Connector 64 pin	1
3D		Grip	1
4D		Textstrip	1
5D	5322 255 40079	Cooling star	1
6D	5322 256 94045	Foot capacitor	11
7D		Foot transistor	1
8D	5322 290 34083	Pin solder	8
9D		Transistor, 2N2905	1
10D	5322 130 44017	Transistor, BSV79	1
11D	5322 209 85334	Integrated circuit, OQ651 N2	1
12D	5322 209 84486	Integrated circuit, TBA 2218	3
13D	5322 209 85336	Integrated circuit, OQ 653 N1	1
14D	5322 209 84035	Integrated circuit, SN7416 N	1
15D	5322 209 85335	Integrated circuit, OQ 652 N2	1
16D	5322 130 30774	Diode, BZX 79 - C10	1
17D	5322 130 34047	Diode, UZX75 - C1 V4	1
18D	5322 130 30229	Diode, AAZ15	1
19D		Capacitor, 1N5	1
20D		Capacitor, 22N	5
21D		Capacitor, 3N9	2
22D		Capacitor, 100P	2
23D		Capacitor, 100N	5
24D		Capacitor, 10N	1
25D		Capacitor, 1N2	1
26D		Capacitor, 330N	1
27D		Capacitor, 4N7	1
28D		Capacitor, 470P	1
29D		Capacitor, 3MU3	1
30D		Capacitor, 100N	1
31D		Resistor, 12K1	1
32D		Resistor, 17K8	1
33D		Resistor, 10K	1
34D	5322 103 10135	Resistor, 2K0, 3/4 W	3
35D		Resistor, 2K15	5
36D		Resistor, 4K64	6
37D		Resistor, 56K2	1
38D		Resistor, 1K78	2
39D		Resistor, 825E	1
40D		Resistor, 5K62	4
41D		Resistor, 14K7	10
42D		Resistor, 383K	4
43D		Resistor, 178E	1
44D		Resistor, 46E4	1
45D		Resistor, 464E	1
46D		Resistor, 1K0	1
47D	5322 103 10049	Resistor 5K0, 3/4 W	1
48D		Resistor 21K5	2
49D		Resistor 3K83	1
50D		Resistor 1K21	1
51D		Resistor 22E, 5 W	1
52D		Resistor 261 K	1

PCBA 2M41

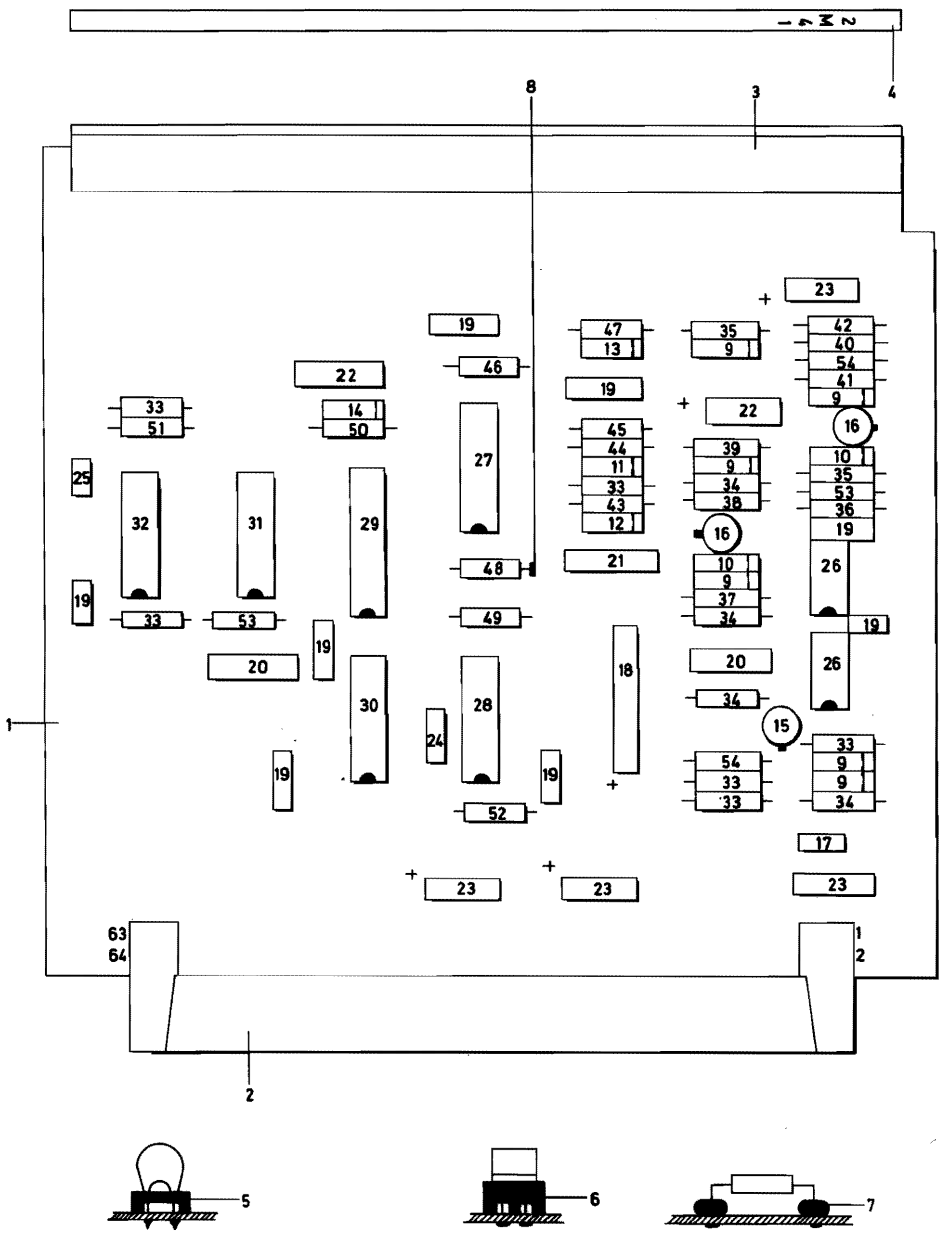

X1215

Item nr	Part number	Description	Qty. per ass'y
A		Final assembly	1
B		Main assembly	1
C	5322 216 25018	PCBA 2M41	1
1D		Panel 2164	1
2D	5322 267 70072	Connector, 64P	1
3D		Grip	1
4D		Text plate	1
5D	5322 256 94045	Foot, capacitor	2
6D	5322 255 44002	Foot, transistor	3
7D		Bead, glass	20
8D		Solder tag	1
9D	5322 130 30613	Diode, BAW62	6
10D	5322 130 30342	Diode, BZY88-C3V6	2
11D	5322 130 30773	Diode, BZX79-C4V7	1
12D	5322 130 34047	Diode, BZX75-C1V4	1
13D	5322 130 30766	Diode, BZX79-C6V2	1
14D	5322 130 40182	Diode, BAX13	1
15D	5322 130 44017	Diode, BSV79	1
16D	5322 130 40324	Diode, BCY70	2
17D		Capacitor, 10N	1
18D		Capacitor, 100MU, 20V	1
19D		Capacitor, 22N	8
20D		Capacitor, 100N	2
21D		Capacitor, 220N	1
22D		Capacitor, 4MU7, 20%	1
23D		Capacitor, 3MU3, 20%	4
24D		Capacitor, 1N5	1
25D		Capacitor, 10N	1
26D	5322 209 84598	Integrated circuit, UA741C	2
27D	5322 209 84242	Integrated circuit, UA710C	1
28D	5322 209 84291	Integrated circuit, SN74121N	1
29D	5322 209 84017	Integrated circuit, SN74123N	1
30D	5322 209 80151	Integrated circuit, SN7408N	1
31D	5322 209 84528	Integrated circuit, SN7400N	1
32D	5322 209 84529	Integrated circuit, SN7403N	1
33D		Resistor, 1K0, 1%	6
34D		Resistor, 10K, 1%	4
35D		Resistor, 82K5, 1%	2
36D		Resistor, 178K, 1%	1
37D		Resistor, 100K, 1%	1
38D		Resistor, 3K83, 1%	1
39D		Resistor, 68E1, 1%	1
40D		Resistor, 56K2, 1%	1
41D		Resistor, 2K15, 1%	1
42D		Resistor, 1K47, 1%	1
43D		Resistor, 1K47 1%	1
44D		Resistor, 4K64, 1%	1
45D		Resistor, 2K61, 1%	1
46D		Resistor, 12E1, 1%	1
47D		Resistor, 178E, 1%	1
48D		Resistor, 215E, 1%	1
49D		Resistor, 825E, 1%	1
50D		Resistor, 28K7, 1%	1
51D		Resistor, 121E, 1%	1
52D		Resistor, 38K3, 1%	1
53D		Resistor, 17K8, 1%	2
54D		Resistor, 31K6, 1%	2

PCBA 2M63

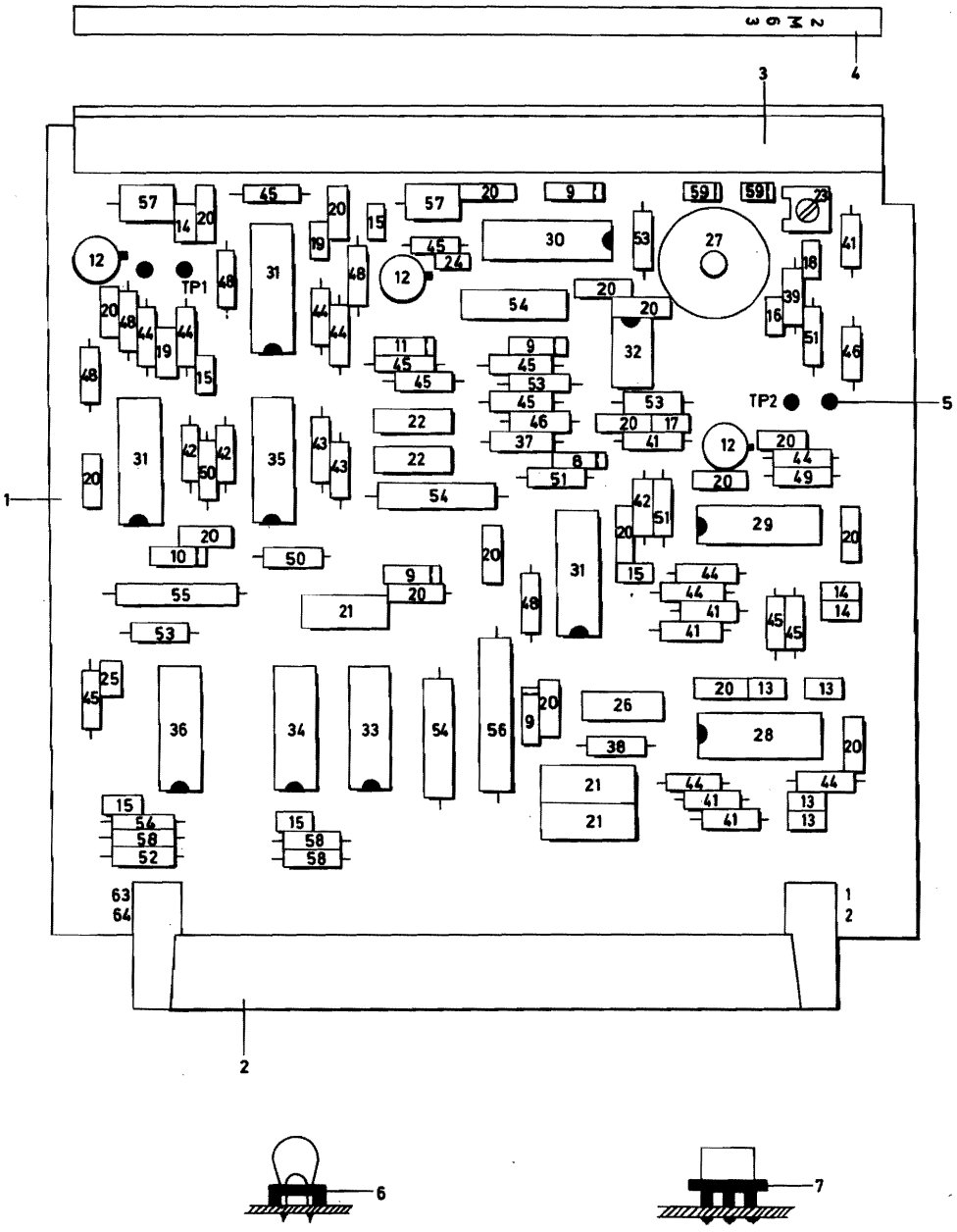

Item nr	Part number	Description	Qty. per ass'y
A		Final assembly	1
B		Main assembly	1
C	5322 216 24913	PCBA 2M63	1
1D		Panel 2120	1
2D	5322 267 70072	Connector	1
3D		Grip	1
4D		Textstrip	1
5D	5322 268 14059	Pin contact	4
6D	5322 256 94045	Foot, capacitor	18
7D	5322 255 44002	Foot transistor	3
8D	5322 130 34323	Diode, BAV 10	1
9D	5322 130 30766	Diode, B2X79 - C6V2	2
10D	5322 130 30773	Diode, BZX79 - C4V7	1
11D	5322 130 30759	Diode, BZX79 - C5V6	1
12D	5322 130 40407	Transistor, BSX20	1
13D		Capacitor, 4N7	2
14D		Capacitor, 100P	1
15D		Capacitor, 10N	5
16D		Capacitor, 390P	1
17D		Capacitor, 1N2	1
18D		Capacitor, 2N2	1
19D		Capacitor, 3N3	2
20D		Capacitor, 22N	6
21D		Capacitor, 100N	2
22D		Capacitor, 510P	1
23D		Trimmer, 10P	1
24D		Capacitor, 10P	2
25D		Capacitor, 39P	1
26D	5322 158 14034	Choke	1
27D	5322 158 24056	Pot core, assy	1
28D	5322 209 84675	Integrated circuit, U6A7760	1
29D		Integrated circuit, U6A7711	1
30D	5322 209 84677	Integrated circuit, U6A7733	1
31D	5322 209 84242	Integrated circuit, UA710C	3
32D	5322 209 84598	Integrated circuit, UA741C	1
33D	5322 209 84165	Integrated circuit, SN7474N	1
34D	5322 209 84194	Integrated circuit, SN7438N	1
35D	5322 209 84676	Integrated circuit, GJH231/74H01N	1
36D	5322 209 84017	Integrated circuit, SN74121N	1
37D		Resistor, 10E 1%	1
38D		Resistor 21E5 1%	1
39D		Resistor 31E6 1%	1
40D		Resistor, 56E2 1%	1
41D		Resistor, 100E 1%	1
42D		Resistor, 464E, 1%	4
43D		Resistor, 562E, 1%	2
44D		Resistor, 825E, 1%	1
45D		Resistor, 1K0 1%	5
46D		Resistor, 1K21 1%	8
47D		Resistor, 2K15 1%	2
48D		Resistor, 2K61 1%	1
49D		Resistor, 3K83 1%	5
50D		Resistor, 4K64 1%	1
51D		Resistor, 5K62 1%	2
52D		Resistor, 10K 1%	3
53D		Resistor, 12K1 1%	1
54D		Resistor, 147E 1%	2
55D		Resistor, 215E 1%	3
56D		Resistor, 82E5 1%	1
57D	5322 101 14067	Potentioneter, 5K01%	1
58D		Resistor, 383E, 1%	2
59		Diode, BSX20	2
			3

PCBA MEANDER

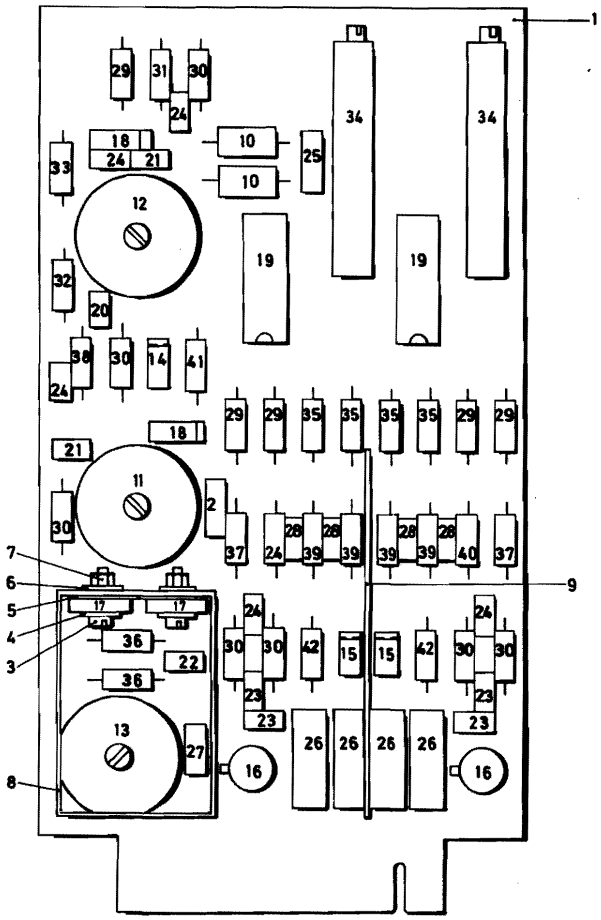

Item nr	Part number	Description	Qty. per ass'y
A		Final assembly	1
B		Main assembly	1
C	5322 216 24482	PCBA Meander	1
1D		Board	1
2D	5322 256 94045	Base, capacitor	17
3D		Screw, M3x8	2
4D		Washer, 3,2x7	2
5D	5322 532 54349	Ring, Mica	2
6D		Spring ring	2
7D		Nut, M3	2
8D		Screening housing	1
9D		Screening plate	1
10D	5322 158 14034	Coil, 220 uH	2
11D	5322 158 24059	Potcore, Assy	1
12D	5322 158 24058	Potcore, Assy	1
13D	5322 158 24061	Potcore, Assy	1
14D	5322 130 34047	Diode, BZX75 - C1V4	1
15D	5322 130 34173	Diode, BZX79 - C5V6	2
16D	5322 130 40423	Transistor, BCY87	2
17D	5322 130 40823	Transistor, BD139	2
18D	5322 130 44082	Transistor, BSW69	2
19D	5322 209 84762	Integrated circuit, CA 3054	2
20D		Capacitor, CER, 56pF ± 2%, 63V	1
21D		Capacitor, CER, 100pF ± 2%, 63V	2
22D		Capacitor, CER, 680pF ± 10%, 100V	1
23D		Capacitor, CER, 3300pF ± 10%, 100V	4
24D		Capacitor, CER, 10000pF -20/+100% 40V	5
25D		Capacitor, CER, 22000pF -20/+100% 40V	2
26D		Capacitor, MPR, 0.022 uF ± 10% 250V	4
27D	5322 124 14075	Capacitor, Electrolytetantalum 1 uF ± 10% 35V	1
28D		Capacitor, CER, 10pF + 2% 63V	4
29D		Resistor, 3K83 ± 1% 125mW	5
30D		Resistor, 5K62 ± 1% 125mW	7
31D		Resistor, 4K64 ± 1% 125mW	1
32D		Resistor, 8K25 ± 1% 125mW	1
33D		Resistor, 26K1 ± 1% 125mW	1
34D	5322 103 14028	Potentiometer, 200 ohm 1W	2
35D		Resistor, 10 ohm 1% 125mW	4
36D		Resistor, 26E1 1% 125mW	2
37D		Resistor, 100 ohm 1% 125mW	2
38D		Resistor, 147 ohm 1% 125mW	1
39D		Resistor, 383 ohm 1% 125mW	4
40D		Resistor, 1K 1% 125mW	2
41D		Resistor, 825 ohm 1% 125mW	1
42D		Resistor, 3K16 1% 125mW	2

PCBA 1M87 (DRIVER)

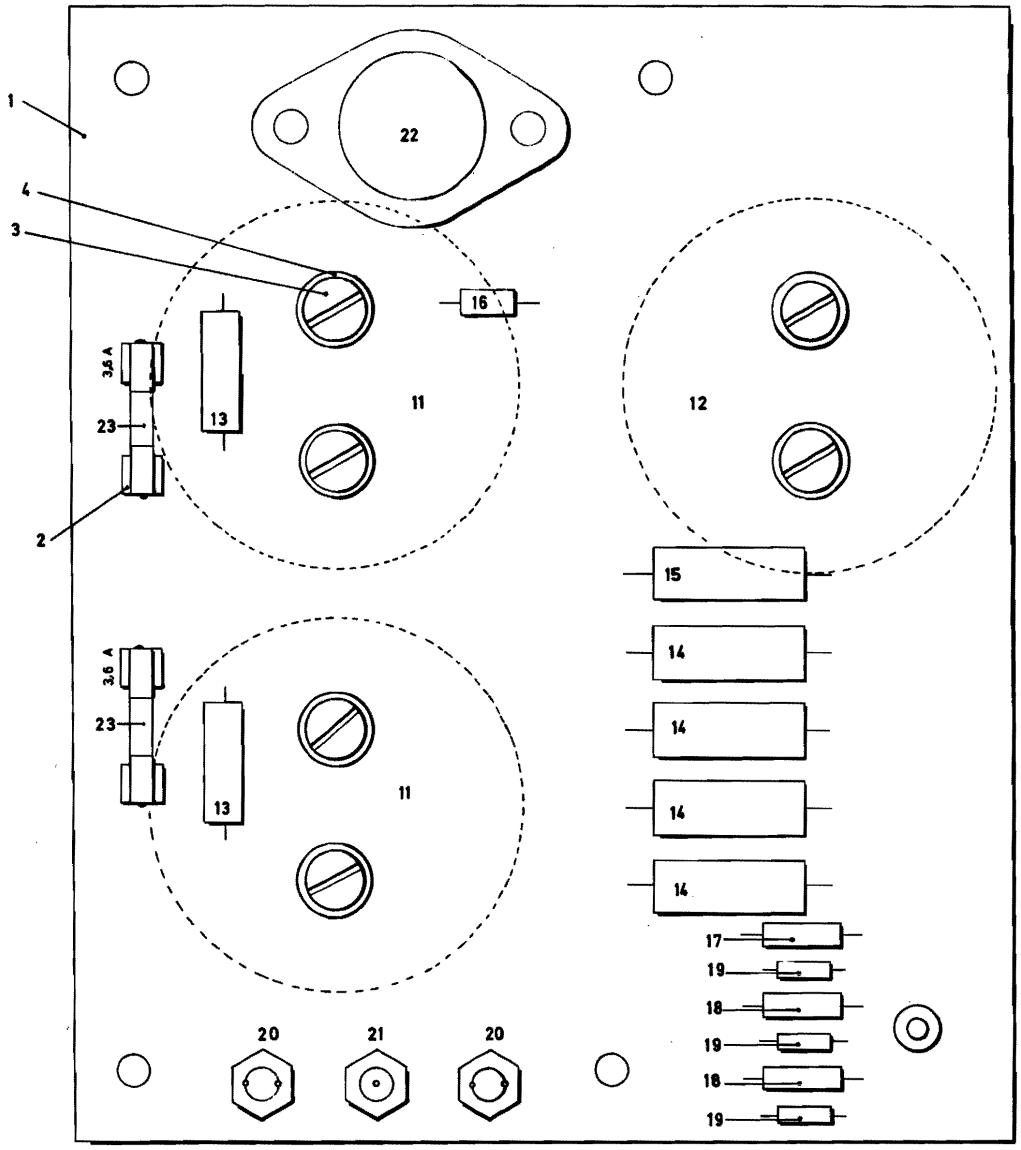

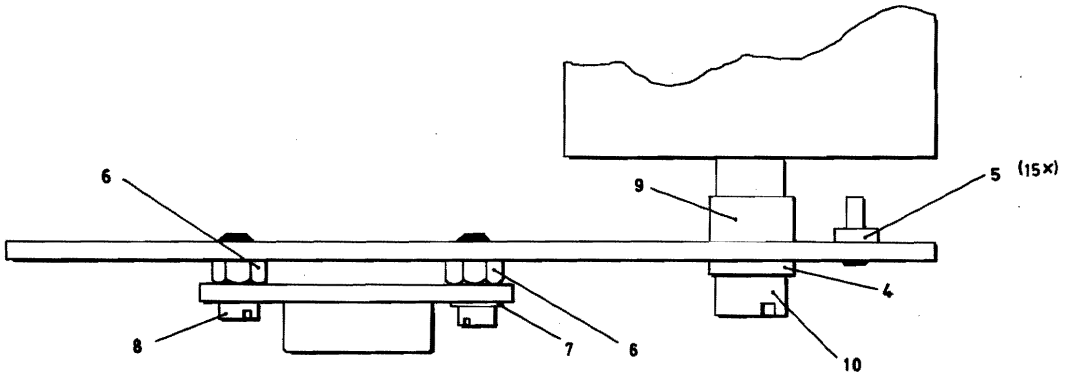

Item nr	Part number	Description	Qty. per ass'y
C		Sub-assembly	1
D		Frame assy	1
E	5322 216 24485	PCBA, driver	1
1F		Board, driver	1
2F	5322 256 34031	Fuse-holder	4
3F		Screw, M5x20, cyl., NLN-B103	4
4F		Washer, Earth, NLN-B044	6
5F		Pin, connecting	15
6F		Nut, insert, M3x2,8, HEX., NLN-B024AX	2
7F		Washer, earth, 3,2x6, St.Cu.Ni., NLN-B044	1
8F		Screw, M3x6, cyl., NLN-B103	2
9F		Washer	2
10F		Screw, M5x15, cyl., NLN-B103	2
11F	5322 124 74033	Capacitor, 15000 uF -40V	2
12F	5322 124 74057	Capacitor, 22000 uF -16V	1
13F	4822 112 21112	Resistor, 1K5, 4W, 5%	2
14F	5322 113 60019	Resistor, 0,33 ohm, 2W, 10%	4
15F	4822 112 21065	Resistor, 27 ohm, 4W, 5%	1
16F		Resistor, 100 ohm, 125mW, 1%	1
17F		Resistor, 316 ohm, 250mW, 1%	1
18F		Resistor, 1K21, 250mW, 1%	2
19F	5322 130 30607	Diode, BYX36 - 600	3
20F	5322 130 20017	Thyristor, BTY79 - 400R	2
21F	5322 130 34545	Diode, ZX6,8	1
22F	5322 130 40842	Transistor, 2N3442	1
23F	4822 253 20028	Fuse, 6,3A - 250V	2

PCBA POWER SUPPLY

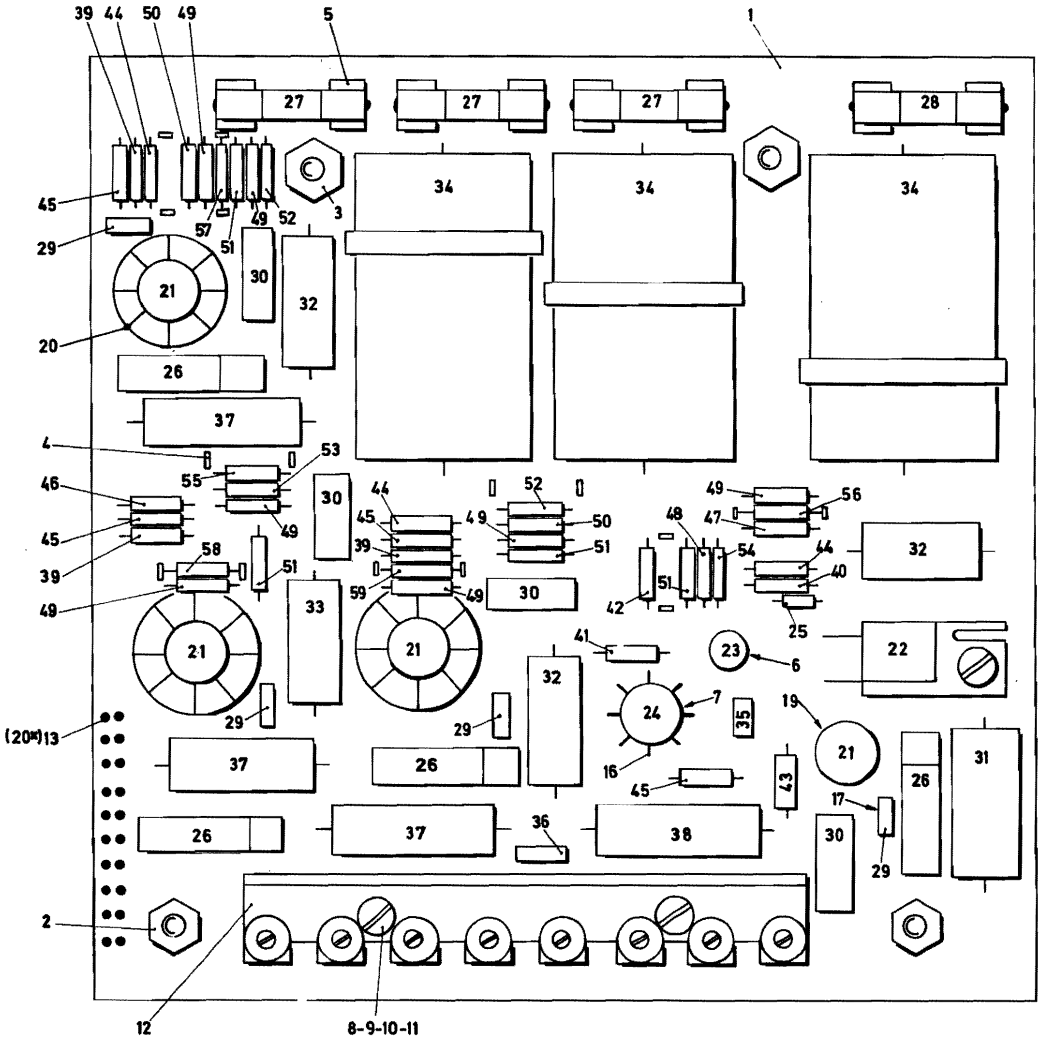

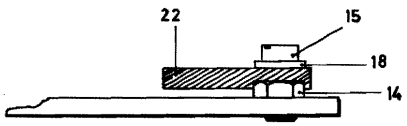

Item nr	Part number	Description	Qty. per ass'y
C		Sub-assembly	1
D		Frame assembly	1
E	5322 216 24496	PCBA, Power supply	1
1F		Board, supply section	1
2F		Nut, insert (long)	2
3F		Nut, insert (short)	2
4F	5322 209 34083	Solder tag, 0,9, CNW 3-4-1	16
5F	5322 256 34031	Fuse-holder	8
6F		Foot, transistor, TO-18	1
7F	5322 255 44056	Foot, transistor, TO-5	1
8F	5322 815 23554	Screw, M3x15, st.cd., cyl, NLN-B103	2
9F		Washer, 3,2x7, St.cd., UN-B050	2
10F	5322 532 10231	Washer, spring, 3,1x5,7, Cu.SN.CD., SN-B051 AX	2
11F		Nut, M3, HEX, St.Cd. UN-B020	2
12F	5322 290 64172	Connecting-block, 8-pole	1
13F	5322 268 14059	Pin, locking	20
14F		Nut, insert, M3x2,3, HEX, Ni.br. NLN-B024 AX	1
15F		Screw, M3x6, St.Cd., Cyl., NLN-B103	1
16F	5322 255 44093	Heat sink	1
17F	5322 256 94045	Base, capacitor	5
18F	5322 532 14493	Washer, earth, St. Cu.Ni., 3,2x6	1
19F		Base, Integrated circuit	4
20F	5322 252 40079	Cooling plate, TO-5, TX-BF-032-025B	3
21F	5322 209 84899	Integrated circuit, TBA 281	4
22F	5322 130 24035	Thyristor, BT 100A	1
23F	5322 130 40486	Transistor, BCY 72	1
24F	5322 130 44019	Transistor, BSX 60	1
25F	5322 130 34173	Diode, BZX79 - C5V6	1
26F	5322 130 30414	Rectifier bridge, BY 164	4
27F	4822 253 30021	Fuse, 1A - 250V	3
28F	4822 253 30028	Fuse, 4A - 250V (slow)	1
29F		Capacitor, 680pF - 40V - 10%	4
30F		Capacitor, 0,1 µF - 100V - 10%	4
31F		Capacitor, 100 µF - 20V	1
32F		Capacitor, 100 µF - 16	3
33F		Capacitor, 5,6 µF - 25V	1
34F	5322 124 20597	Capacitor, 2200 µF - 40V	3
35F		Capacitor, 10 nF - 40V - -20/+100%	1
36F		Capacitor, 22 nF - 40V - -20/+100%	1
37F	4822 113 60056	Resistor, 1 ohm, 2W - 10%	3
38F	5322 111 44163	Resistor, 0,22 ohm, 5W - 10%	1
39F		Resistor, 5,11 ohm, 1% - 125mW	3
40F		Resistor, 10 ohm - % 125mW	1
41F		Resistor, 26,1 ohm - 1% - 125mW	1
42F		Resistor, 82,5 ohm - 1% - 125mW	1
43F		Resistor, 100 ohm - 1% - 125mW	1
44F		Resistor, 121 ohm - 1% - 125mW	3
45F		Resistor, 147 ohm - 1% - 125mW	4
46F		Resistor, 215 ohm - 1% - 125mW	1
47F		Resistor, 681 ohm - 1% - 125mW	1
48F		Resistor, 825 ohm - 1% - 125mW	1
49F		Resistor, 1K - 1% - 125mW	7
50F		Resistor, 1K47 - 1% - 125mW	2
51F		Resistor, 1K78 - 1% - 125mW	4
52F		Resistor, 2K61 - 1% - 125mW	2
53F		Resistor, 3K83 - 1% - 125mW	1
54F		Resistor, 4K64 - 1% - 125mW	1
55F		Resistor, 5K62 - 1% - 125mW	1
56F		Resistor, A.R., 1K78 - 1% - 125mW	1
57F		Resistor, A.R., 2K15 - 1% - 125mW	1
58F		Resistor, A.R., 2K61 - 1% - 125mW	1
59F		Resistor, A.R., 3K16 - 1% - 125mW	1
60F	5322 130 34494	Rectifier, bridge, SKB 2/02 L5A	1

PCBA 6M03

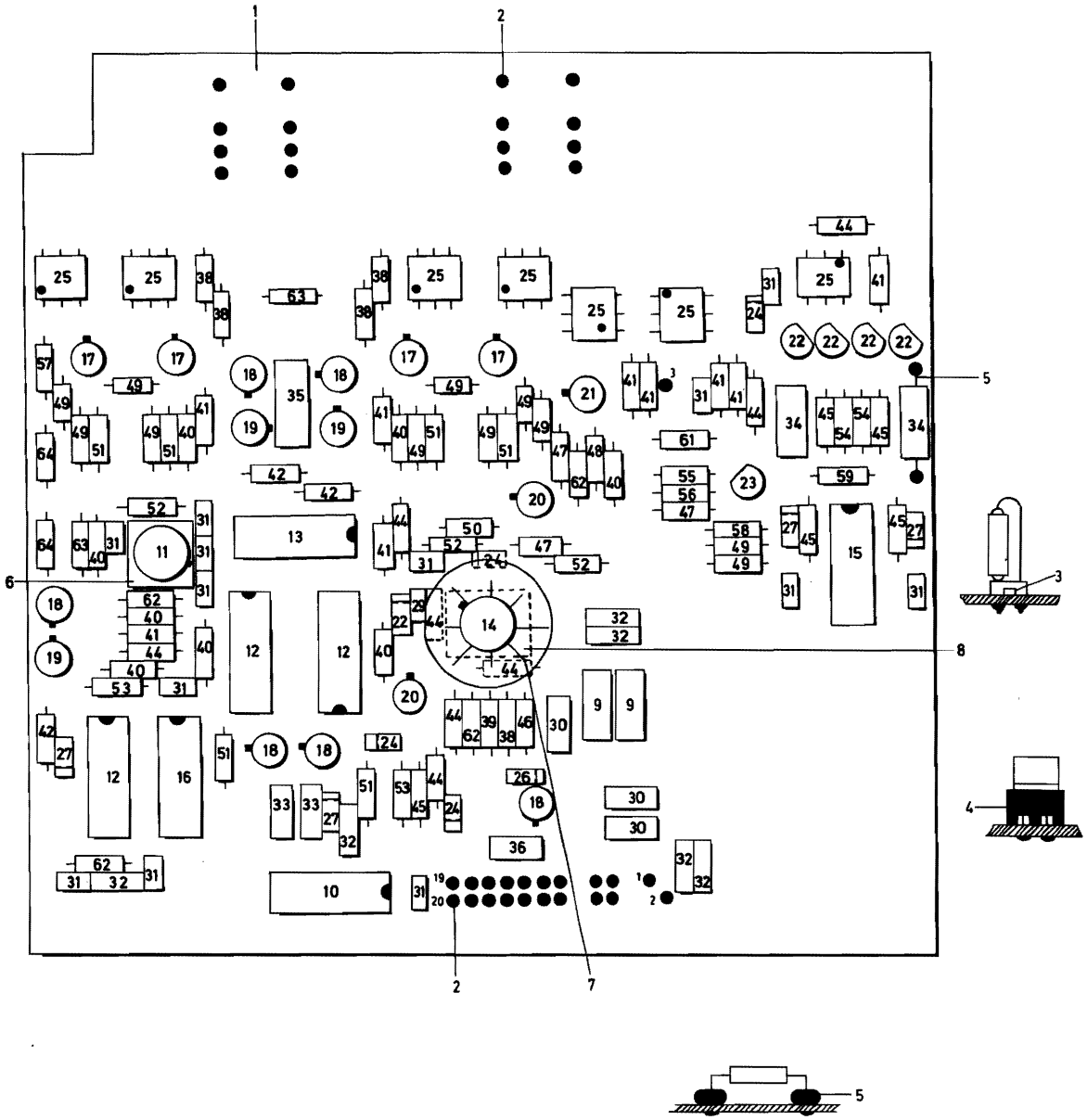

Item nr	Part number	Description	Qty. per ass'y
A		Final assembly	1
B		Main assembly	1
C	5322 216 24955	PCBA 6M03	1
1D		Panel 6047	1
2D	5322 268 14059	Pin	37
3D	5322 256 94045	Foot, capacitor	17
4D	5322 255 44002	Foot, transistor	16
5D		Bead, glass	24
6D	5322 255 44102	Converter, TO-99	1
7D	5322 255 40079	Cooling ring	1
8D	5322 255 44097	Converter, TO-100	1
9D	5322 158 10243	Choke, 100UH	2
10D	5322 209 84036	Integrated circuit, SN7417	1
11D	5322 209 84372	Integrated circuit, 710HC	1
12D	5322 130 34054	Integrated circuit, 711DC	2
13D	5322 209 84918	Integrated circuit, SN74S114N	1
14D	5322 209 84899	Integrated circuit, 723HC	1
15D	5322 209 84916	Integrated circuit, 733DC	1
16D	5322 209 84049	Integrated circuit, SN7413N	1
17D	5322 130 44502	Transistor, 2N2906	4
18D	5322 130 40417	Transistor, NSX20	6
19D	5322 130 40205	Transistor, BSX29	3
20D	5322 130 40324	Transistor, BCY70	2
21D	5322 130 44115	Transistor, 2N2222A	1
22D	4822 130 40902	Transistor, BE240	4
23D	5322 130 44195	Transistor, BF494	1
24D	5322 130 30613	Diode, BAW62	4
25D	5322 130 34391	Diode, 512BAY	7
26D	5322 130 34047	Diode, BZX75-C1V4	1
27D	5322 130 34167	Diode, BZX79-C6V2	4
28D	5322 130 34069	Diode, BZX79-C12	1
29D		Capacitor, 100P	1
30D		Capacitor, 0MU1, 50V	3
31D		Capacitor, 10N	13
32D		Capacitor, 22N	6
33D		Capacitor, 10N, 50V, 10%	2
34D		Capacitor, 6N8	2
35D		Capacitor, 22N	1
36D		Capacitor, 4MU7, 20%	1
37D		Capacitor, 390P	1
38D		Resistor, 121E, 1%	5
39D		Resistor, 147E, 1%	1
40D		Resistor, 681E, 1%	6
41D		Resistor, 4K64, 1%	9
42D		Resistor, 8E25, 1%	3
43D			
44D		Resistor, 2K15, 1%	8
45D		Resistor, 1K78 1%	3
46D		Resistor, 21K5, 1%	1
47D		Resistor, 5K62, 1%	3
48D		Resistor, 82E5, 1%	1
49D		Resistor, 1K21, 1%	10
50D		Resistor, 1K0 , 1%	1
51D		Resistor, 6K81, 1%	6
52D		Resistor, 100E, 1%	3
53D		Resistor, 316E, 1%	2
54D		Resistor, 8K25, 1%	2
55D		Resistor, 31K6, 1%	1
56D		Resistor, 10K, 1%	1
57D		Resistor, 38E3, 1%	1
58D		Resistor, 178E, 1%	1
59D		Resistor, 261E, 1%	1
60D			
61D		Resistor, 12K1, 1%	1
62D		Resistor, 3K83, 1%	4
63D		Resistor, 14K7, 1%	2
64D		Resistor, 68E1, 1%	2

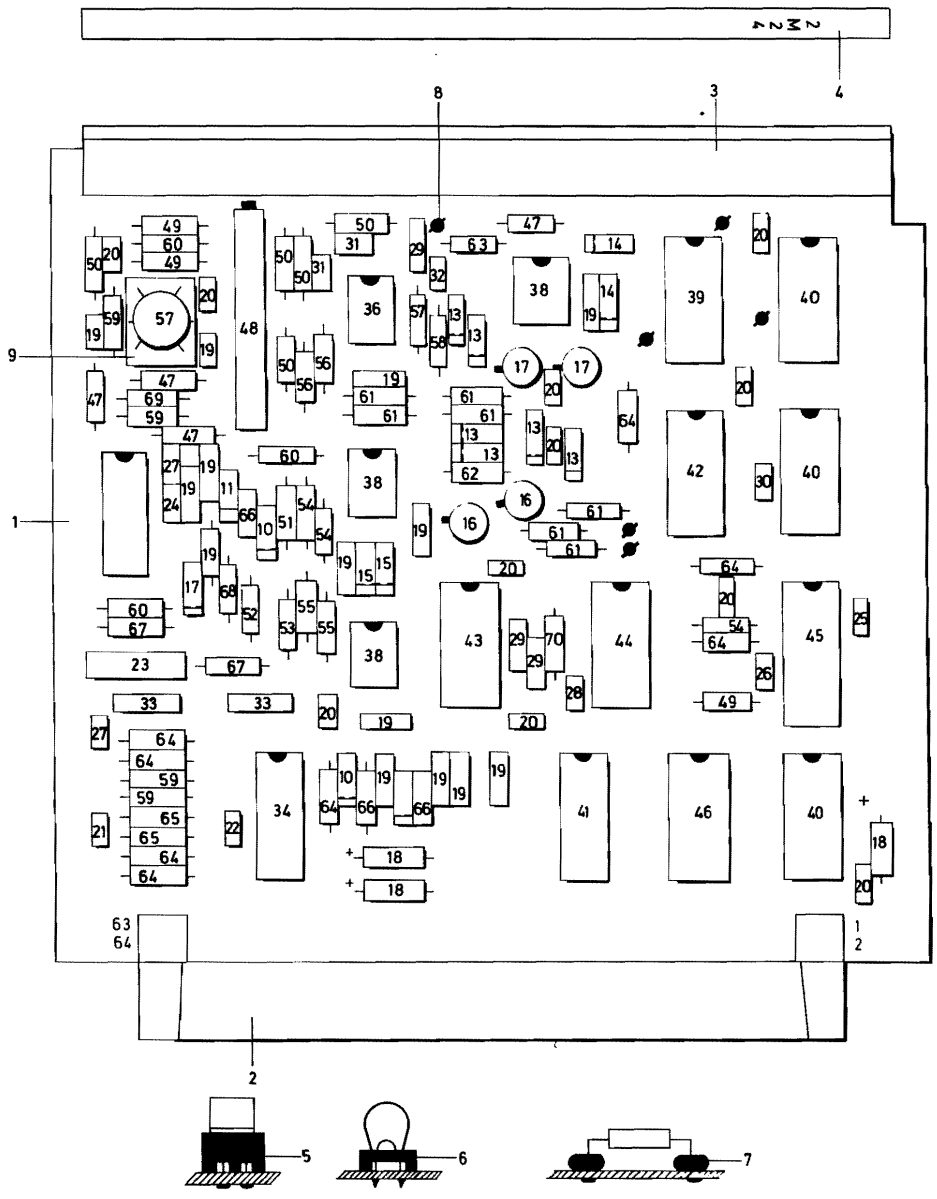
2M24
8
3
4
9
1
2
5
6
7
63
64
1
2

Item nr	Part number	Description	Qty. per ass'y
B	5322 216 24956	PCBA 2M24	1
1C		PANEL 2160	1
2C	5322 267 70072	CONNECTOR 64P	1
3C		GRIP	1
4C		TEXT STRIP	1
5C	5322 255 44002	FOOT, TRANSISTOR	4
6C	5322 256 94045	FOOT, CAPACITOR	25
7C		BEAD, GLASS	1
8C	5322 290 34083	SOLDER TAG	6
9C	5322 255 44097	SPACER	1
10C	5322 130 34173	DIODE, BZX79-C5V6	3
11C	5322 130 34167	DIODE, BZX79-C6V2	1
12C	5322 130 30613	DIODE, BAW62	6
13C	5322 130 30594	DIODE, BAV10	6
14C	5322 130 34049	DIODE, BZX75-C2V1	2
15C	4822 130 30773	DIODE, BZX79-C4V7	2
16C	5322 130 40324	TRANSISTOR, BCY70	2
17C	5322 130 44017	TRANSISTOR, BCY79	2
18C	5322 124 10005	CAPACITOR, 3MV3	3
19C		CAPACITOR, 22N	11
20C		CAPACITOR, 10N	13
21C		CAPACITOR, 22P	1
22C		CAPACITOR, 12P	1
23C		CAPACITOR, 68N	1
24C		CAPACITOR, 2N2	1
25C		CAPACITOR, 330P	1
26C		CAPACITOR, 4N7	1
27C		CAPACITOR, 10P	2
28C		CAPACITOR, 1N0	1
29C		CAPACITOR, 0MU1, 50V	3
30C		CAPACITOR, 560P	1
31C		CAPACITOR, 68P	2
32C		CAPACITOR, 1N5	1
33C	5322 158 10278	FILTER CHOKE, 1000UM	2
34C	5322 209 84917	INTEGRATED CIRCUIT, 760DC	1
35C	5322 209 84603	INTEGRATED CIRCUIT, LM1414N	1
36C	5322 209 85425	INTEGRATED CIRCUIT, LM725CN	1
37C	5322 209 84672	INTEGRATED CIRCUIT, 711HC	1
38C	5322 209 84486	INTEGRATED CIRCUIT, TBA221B	3
39C	5322 209 84165	INTEGRATED CIRCUIT, SN7474N	1
40C	5322 209 84528	INTEGRATED CIRCUIT, SN7400N	2
41C	5322 209 84516	INTEGRATED CIRCUIT, SN74197N	1
42C	5322 209 80150	INTEGRATED CIRCUIT, SN7408N	1
43C	5322 209 84017	INTEGRATED CIRCUIT, SN74121N	1
44C	5322 209 84201	INTEGRATED CIRCUIT, SN7486N	1
45C	5322 209 84194	INTEGRATED CIRCUIT, SN74123N	1
46C	5322 209 84486	INTEGRATED CIRCUIT, FBA221B	1
47C	5322 116 54012	RESISTOR, 6K81	4
48C	5322 103 14041	POT. METER, TRIM, 1Ko, 1W	1
49C	5322 116 54651	RESISTOR, 26K1	3
50C	5322 116 54736	RESISTOR, 261K	4
51C	5322 116 54011	RESISTOR, 5K62	1
52C	5322 116 54426	RESISTOR, 121E	1
53C	5322 116 54676	RESISTOR, 56K2	1
54C	5322 116 54619	RESISTOR, 10K	3
55C	5322 116 54696	RESISTOR, 100K	2
56C	5322 116 50572	RESISTOR, 12K1	2
57C	5322 116 54034	RESISTOR, 31E6	1
58C	5322 116 54511	RESISTOR, 316E	1
59C	5322 116 54469	RESISTOR, 100E	5
60C	5322 116 50767	RESISTOR, 2K15	3
61C	5322 116 50484	RESISTOR, 4K64	7
62C	5322 116 50557	RESISTOR, 46K4	1
63C	5322 116 50671	RESISTOR, 2K61	1
64C	5322 116 54549	RESISTOR, 1Ko	9
65C	5322 116 50767	RESISTOR, 215E	2
66C	5322 116 54492	RESISTOR, 178E	3
67C	5322 116 50677	RESISTOR, 21E5	2
68C	5322 116 54012	RESISTOR, 681E	1
69C	5322 116 54589	RESISTOR, 3K83	1
70C	5322 116 54657	RESISTOR, 31K6	1

X1215/16 (ABOVE SERIAL NUMBER 2000)

Cartridge Disk Drive Unit

Vol. X: Installation

PHILIPS Data Systems

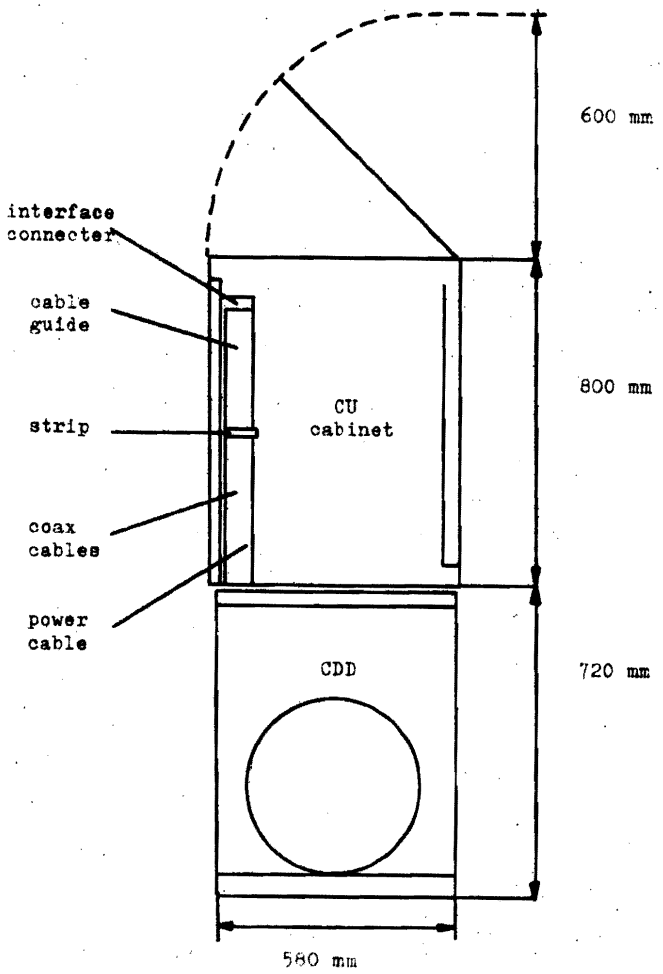

Figure 10-1 SPACE ALLOCATION

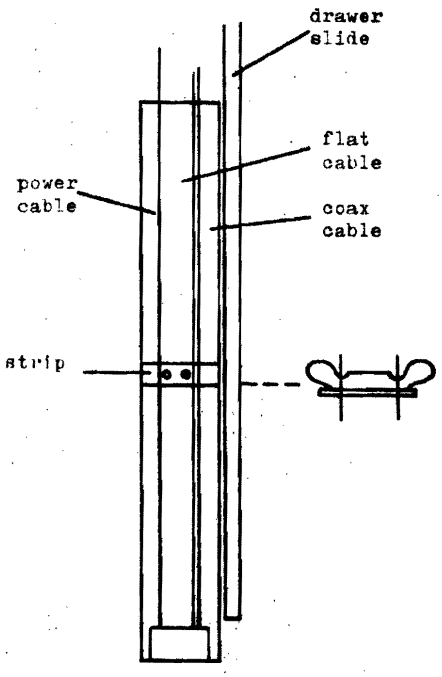

Figure 10-2 CABLE CONNECTIONS

1.1 SPACE LOCATION (figure 10-1)

One CCD mounted in a rack requires a floor area of approximately 600 x 800 mm, when the CCD is mounted on drawing slides an additional 750 mm service area to the front and 650 mm to the rear of the unit should be provided.

1.2 MOUNTING IN THE RACK

1. Pull out the drawer slides.
2. Lift the unit on to the four bolts mounted on the drawer slides.
3. Fasten the unit with four nuts (6 mm).
4. Remove the interface connector from the dummy plate.
5. Fasten the interface cable guide provided to the left drawer slide.
6. Fasten the interface connector to the cable guide.
7. Fasten the interface cable and power cable to the cable guide with the strip provided.
8. Remove the dummy interface cable guide.

1.3 INTERFACE CONNECTIONS (figure 10-2)

Jackscrews on the interface connection cable must be gradually tightened with a screwdriver or damage may result.

1. Refer to the figures 10-2 and 10-3, and install the interface cable.

2. Connect the cable between CU and the device.
   This cable is put in the connector on the right side, viewed from the rear of the rack.
   Interface cable and power cable must be fastened as shown in figure 10-2.

1.4 POWER CONNECTION (see fig. 10-2 and 10-3)

The power cable for the CDD originates at the rear of the unit.
(Hirchmann connector).

1) Connect the 1 phase 220 V power cable at the connector on the rear of the unit.
2) Fasten this cable to left post of the rack, viewed from the rear (see fig. 10-3).
3) Connect the power cable to the terminal block (220 V) located at the bottom of the CU rack.
4) Don't connect the shield of the power cable to any point on the rack.

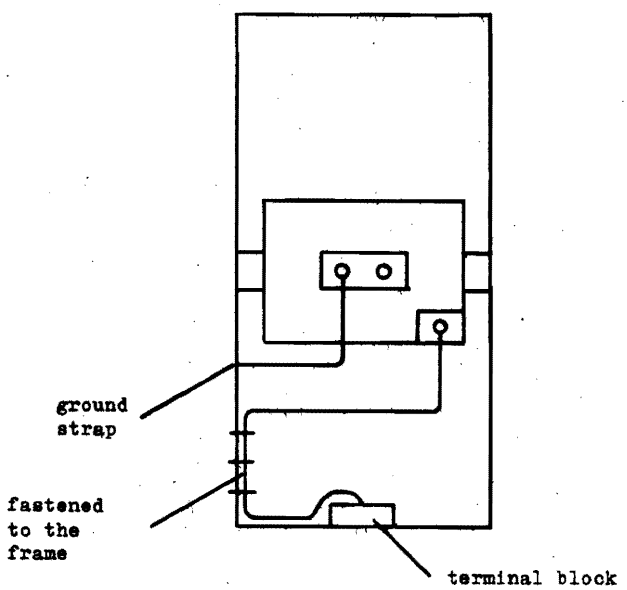

Fig. 10-4 REAR VIEW OF THE CABINET

1.5 GROUND CONNECTIONS (figure 10-3)

1. Connect the unit at the rear side with a ground strap to the rack or the frame. The length of the strap is about 100 cm.

1.6 INPUT POWER REQUIREMENTS

The CCD requires an input source capable of supplying 220 V + 10%, - 15%. 50 Hz ± 1%.

Primary 220 V AC 1 phase
VA cos 0,7 to 0,8 (operating)
VA cos 0,7 to 0,8 (pack motor off)
2,6A/phase surge current
Heat dissipation 500 Watt.

This procedure should be used to make the first power application to the C.D.D. The procedure assumes that the preceding procedures and requirements of this section have been performed and satisfied. Instructions are given for the C.D.D. only.

1. Remove the four crosshead screws of the rear cover, remove the two crosshead screws of the front cover and disconnect the transport lock string of the carriage.
2. Check that all plugs and logic cards are firmly seated in their connectors.
3. Check that all heads in retracted position are retired by the head loading cam block.
4. Note the count of the elapsed time meter.
5. Make sure that the power cable is connected to the correct external power source, see installation 1.6.
6. If the external AC power to the device is protected by a main switch, set the mainpower switch to ON. Turn on the C.D.D. The power on switch is located on the rear of the unit.
7. Place a cartridge on the spindle, start and stop immediately.
8. Repeat step 7 about 5 times, so that the cleaning cycle will run a few times.
9. When the disk pack has achieved operational speed the brushed are returned to a position clear of the disk pack. The voice coil system drives the carriage to load the Read/Write heads. When the heads are loaded, on the operators panel, the unit ready (UR) indicator lights and the heads stay at CYL. 000.
10. With the mainpower OFF, install a CE disk pack. Remove the WC (1A24) card and replace with the CE write disable card. Switch on the mainpower, start pack motor and when the heads are loaded wait about 2 hours and precede as described in volume VII, chapter 3.6 of the manual.
11. Stop spindle motor.
12. Switch off the mainpower.
13. Fasten the front and rear cover.

X1215/16 (ABOVE SERIAL NUMBER 2000)

Cartridge Disk Drive Unit

Vol. XI: Unpacking and Packing

Data Systems

During uncrating; care must be taken so that tools being used do not inflict damage to any assembly.
As a CDD is uncrated, inspect it for possible shipping damage.
All claims resulting from this type of damage should be promptly filed with the carrier involved.
If a claim is filed for damages, save the original crating materials.
Most crating materials will be re-usable if reasonable care is taken in uncrating.
Uncrate and inspect the CDD as outlined in the following chapters.
Let the uncrated unit acclimate in the computerroom for 2 hours before operating.

The CDD is transported on a wooden pallet designed for handling by a fork-lift truck. The fork width must be set to at least 75 cm when inserted from the side.
It is important that the mechanical shocks be kept to a minimum during transport.

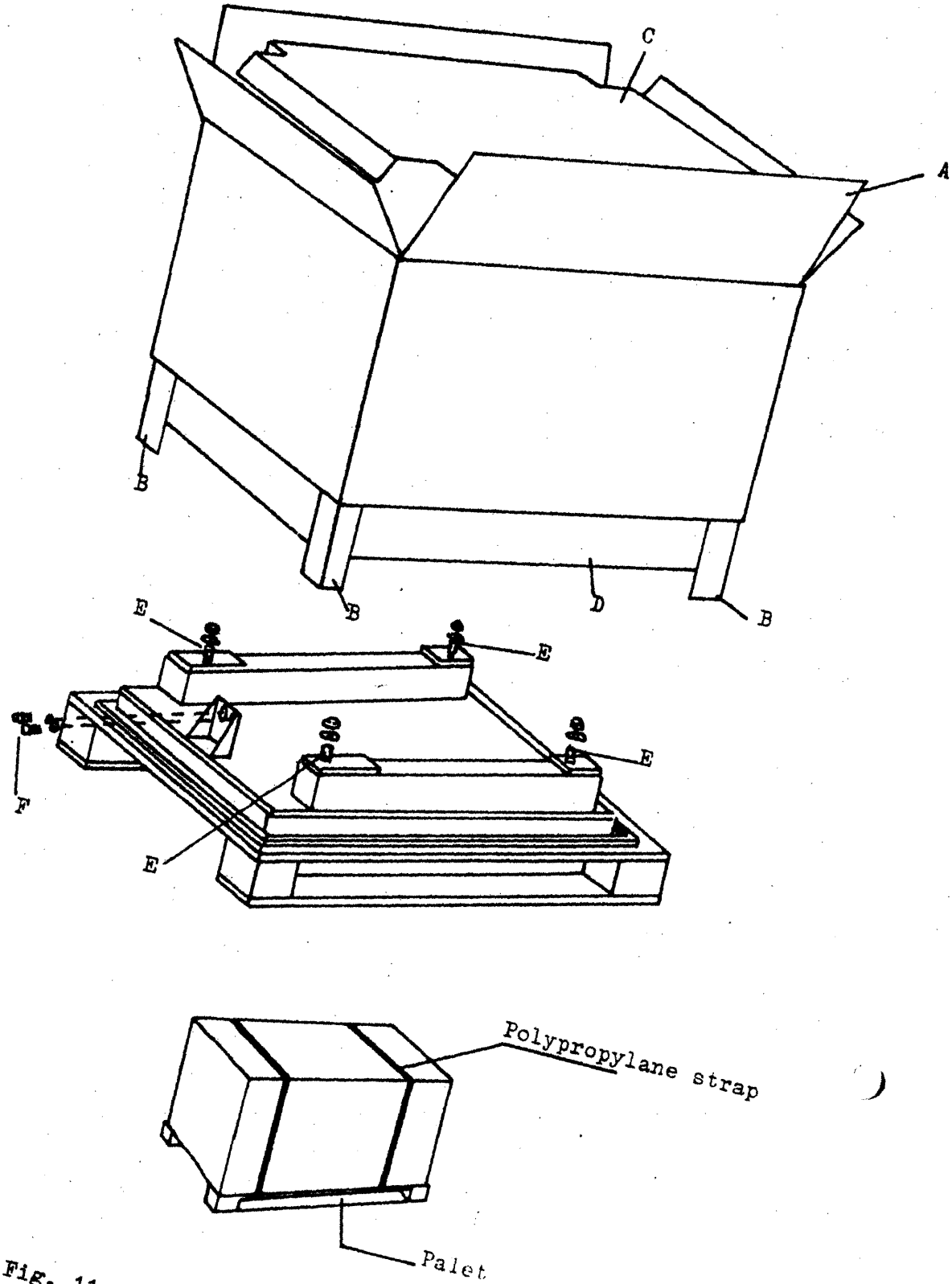

Fig. 11-1 UNIT STORAGE

3.1 PACKING (fig. 11-1)

1) Remove the 4 crosshead screws of the rear cover and the 2 crosshead screws of the front cover.
2) Put the plastic cover on the palet over the 4 bolts.
3) Lift the unit on the palet.
4) Fasten the unit with 4 nuts. (E)
5) Fasten the front and rear cover.
6) Close the plastic cover with adhesive tape.
7) Put over the cardboard sleeve. (D)
8) Put over the cardboard box. (A)
9) Put in the cardboard on each corner. (B)
10) Put on the cardboard cover. (C)
11) Close the cardboard box.
12) Pass the polypropylane straps under the top surface of the pallet. Pass the straps over the box top and bring the ends of each strap together (see also unpacking).

3.2 UNPACKING (fig. 11-1)

1. Remove the two polypropyl straps securing the protective covers.
2. Remove the corrugated cardboard box (A) by lifting it.
3. The currugated cardboards (B) on each corner are released, so remove them.
4. Remove the second corrugated cardboard cover (C) by lifting it.
5. Remove the corrugated cardboard sleeve (D)
6. Open the plastic cover.
7. Remove the 4 crosshead screws of the rear cover and the 2 crosshead screws of the front cover.
8. Remove both covers.
9. Remove 4 fastening nuts (E) at both sides and the 2 hex screws (F) at the rear of the unit with which the unit is fixed on the pallet.
10. Lift the unit from the pallet and insert carefully in the rack.

Note: It is possible to re-use the packing materials for transportation, in which case they need a dry storage area.