PHILIPS

Service Manual

X1215

Cartridge Disk Drive Unit



Data Systems

A PUBLICATION OF
PHILIPS-ELECTROLOGICA B.V.
THE HAGUE, THE NETHERLANDS

PUB. NO. 5122 992 00961

MAY 1974

Great care has been taken to ensure that the information contained in this handbook is accurate and complete. Should any errors or omissions be discovered, however, or should any user wish to make a suggestion for improving this handbook, he is invited to send the relevant details to:

PHILIPS-ELECTROLOGICA B.V.
P.O. BOX 1374, THE HAGUE.
THE NETHERLANDS.

Copyright © by PHILIPS-ELECTROLOGICA B.V.
All rights strictly reserved. Reproduction or issue to third parties in any form whatever is not permitted without written authority from the publisher.

	CONTENTS	page 0-3 thr. 0-7
VOLUME I :	INTRODUCTION	1-1 thr. 1-12
1-1	GENERAL DESCRIPTION.	1-3
1-2	FIXED DISK AND SINGLE DISK CARTRIDGE	1-4
2	FUNCTIONAL DESCRIPTION	1-5
3	PHYSICAL DESCRIPTION	1-7
3-1	COVERS	1-7
3-2	CARTRIDGE HOLDER	1-7
3-3	FIXED DISK	1-7
3-4	SPINDLE	1-7
3-5	HEAD POSITIONER ASSEMBLY	1-7
3-6	SWITCHING UNIT	1-9
3-7	ELECTRONIC ASSEMBLIES	1-9
3-8	ELECTRONICS CAGE	1-9
3-9	CLEANING MECHANISM	1-9
3-10	OPERATORS PANEL	1-9
4	TECHNICAL DATA	1-10
4-1	PERFORMANCE CHARACTERISTICS	1-10
4-2	PHYSICAL CHARACTERISTICS	1-10
4-3	ELECTRICAL REQUIREMENTS	1-10
4-4	ENVIRONMENTAL REQUIREMENTS	1-10
5	INTERFACE SIGNALS	1-11
6	OPTIONS	1-12
VOLUME II :	OPERATION	2-1 thr. 2-9
1	OPERATORS PANEL	2-3
1-1	GENERAL	2-3
1-2	BUTTON AND INDICATOR FUNCTIONS	2-3
2	CARTRIDGE HANDLING	2-5
2-1	CARTRIDGE HANDLING AND STORAGE	2-5
2-2	LOADING	2-5
2-3	UNLOADING	2-7
3	DISK DRIVE HANDLING	2-9
3-1	STARTING PROCEDURE	2-9
3-2	STOPPING PROCEDURE	2-9

VOLUME III:	THEORY	page 3-1 thr. 3-50
1	GENERAL	3-3
2	INTERFACE DIALOGUE	3-5
3	DISK DRIVE ACTIONS	3-7
4	MAJOR ASSEMBLIES	3-9
4-1	MAIN DRIVE MOTOR	3-9
4-2	BRUSH MOTOR	3-9
4-3	INDEX/SECTOR TRANSDUCERS	3-9
4-4	POSITIONER	3-9
4-5	SPEED TRANSDUCER	3-10
4-6	DISPLACEMENT PICK-UP SYSTEM	3-10
4-7	AREA INDICATOR	3-10
5	INTERFACE	3-13
5-1	LOGIC LEVELS	3-13
5-2	INPUT SIGNALS	3-13
5-2-1	Unit Select Signal	3-13
5-2-2	Tagline and address busline signals	3-13
5-2-3	Set unit unsafe signal	3-15
5-2-4	Write data signal	3-15
5-3	OUTPUT SIGNALS	3-15
5-3-1	Index signal cartridge (Fixed Disk	3-15
5-3-2	Sector signal cartridge (Fixed Disk)	3-16
5-3-3	Unit ready signal	3-16
5-3-4	On cylinder signal	3-16
5-3-5	Unit unsafe 1 signal	3-16
5-3-6	Unit unsafe 2 signal	3-16
5-3-7	Attention	3-17
5-3-8	Read data signal	3-17
6	PRINCIPLES OF OPERATION	3-18
6-1	SERVO SYSTEM	3-18
6-2	VELOCITY AND ACCELERATION	3-18
6-3	MEANDER SYSTEM	3-19
6-4	VOICE-COIL SYSTEM	3-19
6-5	SERVO OPERATIONS	3-20
6-6	POSITION SERVO LOOP	3-22
6-7	ADDITIONAL CONTROL SIGNALS	3-23
6-8	WINDOW FUNCTIONS	3-23
6-9	RECORDING PRINCIPLES	3-25
6-10	WRITE OPERATION	3-25
6-11	READ OPERATION	3-25
6-12	READ/WRITE PROTECTION	3-27
7	FUNCTIONAL EXPLANATION	3-29
7-1	POWER ON	3-29
7-2	START	3-31
7-3	FIRST SEEK	3-33
7-4	NORMAL SEEK	3-35

	7-5	TRACK COUNT OPERATION	3-37
	7-6	PLACE POSITIONING	3-39
	7-7	POSITIONING MODE	3-39
	7-8	RETURN TO ZERO SEEK	3-41
	7-9	GO TO RETRACTED POSITION SEEK	3-43
	7-10	WRITING	3-45
	7-11	READING	3-47
	7-12	STOP	3-49
	8	POWER DISTRIBUTION	3-50
	8-1	POWER SUPPLY	3-50
VOLUME IV:		DIAGRAMS	page 4-1 thr. 4-51
	1	KEY TO DIAGRAMS	4-2
	1-1	General	4-2
	1-2	Logic symbols	4-3
	2	SIGNAL NAMES	4-21
	3	DIAGRAMS	4-23
		Card DA	4-23
		Card DC	4-25
		Card HUP	4-27
		Card INT	4-29
		Card LCE	4-31
		Card Meander	4-33
		Card PA	4-35
		Card RPA	4-37
		Card RR	4-39
		Card SS	4-41
		Card VX	4-43
		Card WC	4-45
		Card WI	4-47
		Power Card	4-49
		Power Supply and Distribution	4-51
VOLUME V:		ELECTRONICS	page 5-1 thr. 5-7
	1	SPECIAL CIRCUITS	5-3
	1-1	LIMITER	5-3
	1-2	RELAY DRIVER	5-3
	1-3	ELECTRONIC SWITCH	5-4
	1-4	DIFFERENTIAL AMPLIFIER	5-4
	1-5	OPERATIONAL AMPLIFIER	5-5
	1-6	WINDOW CIRCUIT	5-6
	1-7	MEANDER CARD	5-7

VOLUME VI: MECHANICS page 6-1 thr 6-11

1. UNIT STRUCTURE 6-3

2. DUST COVERS 6-4

3. RACK MOUNTINGS 6-5

4. SWITCHING UNIT 6-6

5. COOLING AND CLEANING UNIT 6-7

6. CARTRIDGE HOLDER 6-8

7. SPINDLE MECHANISM 6-9

8. POSITIONER MECHANISM 6-10

9. ELECTRONIC CAGE 6-11

VOLUME VII: MAINTENANCE page 7-1 thr 7-66

1. MAINTENANCE 7-3
1.1 General 7-3
1.2 Special tools 7-3
1.3 Materials 7-3
1.4 Exerciser 7-5
1.5 Exerciser operation 7-5

2. PREVENTIVE MAINTENANCE 7-7
2.1 Scheduled maintenance (500 hrs) 7-7
2.2 Scheduled maintenance (1000 hrs) 7-9

3. ELECTRICAL ADJUSTMENTS 7-12
3.1 Micro switches 7-12
3.2 Y and Z-direction meander block 7-12
3.3 Meander card potentiometers 7-14
3.4 Optical zero adjustment 7-14
3.5 Position speed adjustment 7-15
3.6 Heads 0 and 1 7-22
3.7 Index unit (cartridge) 7-23
3.8 Index unit (fixed disk) 7-24

4. MECHANICAL ADJUSTMENTS 7-25
4.1 Index unit cartridge 7-25
4.2 Index unit fixed disk 7-26
4.3 Retracted switch 7-26
4.4 Cleaning the heads 7-26

5. REPLACEMENTS 7-27
5.1 General 7-27
5.2 Air filters 7-27
5.3 Lock magnet 7-29
5.4 Clamp switches 7-29
5.5 Pack on/off switch 7-29
5.6 Cleaning switch 7-31

5.7	Retracted switch	7-31
5.8	Positioner block magnet	7-31
5.9	Optical zero unit	7-33
5.10	Cleaning unit	7-33
5.11	Power supply card	7-35
5.12	Power transistors	7-35
5.13	Pushbutton and indicators	7-35
5.14	Lamps pushbutton and indicators	7-35
5.15	Index unit cartridge	7-37
5.16	Fixed disk	7-37
5.17	Spindle	7-39
5.18	Pack motor	7-39
5.19	Heads	7-41
5.20	Switching unit	7-41
5.21	Meander	7-43
6.	TROUBLE SHOOTING	7-44
6.1	General	7-44
6.2	Power on	7-45
6.3	Start stop	7-49
6.4	Cleaning cycle	7-53
6.5	First seek	7-54
6.6	Positioning	7-58
6.7	Data faults	7-61
6.8	Fault (USA2)	7-64

VOLUME VIII: PARTS LIST page 8-1 thr 8-85

VOLUME IX : WIRING LIST page 9-1 thr 9-35

VOLUME X : INSTALLATION page 10-1 thr 10-6

1.	INSTALLATION	10-3
1.1	Space location	10-3
1.2	Mounting in the rack	10-3
1.3	Interface connections	10-3
1.4	Power connections	10-4
1.5	Ground connections	10-5
1.6	Input power requirements	10-5
2.	CHECK OUT AND START UP PROCEDURE	10-6

VOLUME XI : PACKING AND UNPACKING page 11-1 thr 11-6

1.	GENERAL	11-2
2.	MACHINE HANDLING	11-3
3.	PACKING AND UNPACKING	11-5
3.1	Packing	11-5
3.2	Unpacking	11-5

X1215
Cartridge Disk Drive Unit
Vol.I: Introduction



Data Systems



Fig. 1-1 Disk Drive Unit

1.1 GENERAL DESCRIPTION. (figure 1-1, 1-2)

The X1215 Disk Drive Unit is a random access data storage device especially designed for use in a star configuration, it is suitable for rack-cabinet installations or stand alone situation. The purpose of a Disk Drive Unit is to provide for the storage of data in a form which allows easy retrieval of these data when required. These requirements are satisfied by the use of disks which are provided with a magnetic coating.
The X1215 Disk Drive Unit is equipped with two independent disks, one of which is permanently mounted in the unit, the second disk is a top loading, operator interchangeable disk cartridge, on which can be written 204 data per side tracks at a nominal speed of 2400 r.p.m.
The data is stored on the disks (write operation) and recovered when required (read operation) by means of magnetic heads which float just clear of the disk surfaces.
To allow the complete disk surfaces to be used the disks are made to rotate and the magnetic heads are attached to a positioning mechanism which can move them in and out accross the disk surfaces.
The disk unit receives instructions about positioning and data handling from a Control Unit and supplies status information to the Control Unit via an assymetric interface.
As it is possible to use more than one Disk Drive Unit on one Control Unit a Unit Select line is used to indicate which Disk Drive Unit is being addressed.

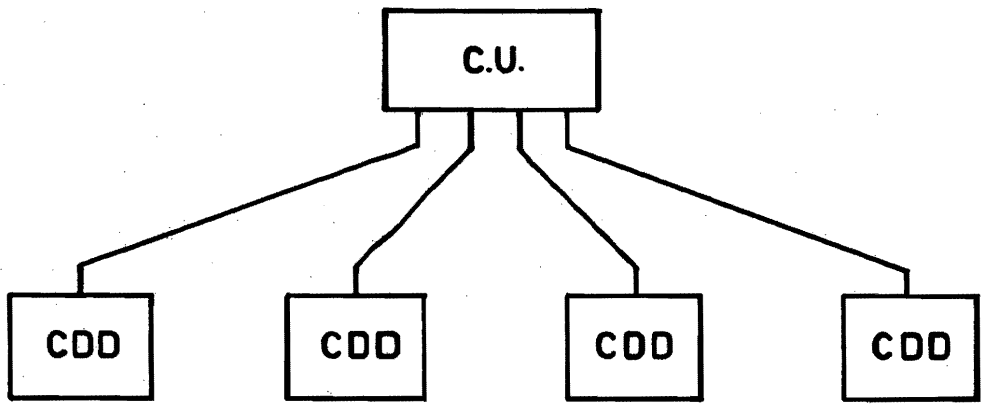

Figure 1-2 STAR CONFIGURATION

1.2 FIXED DISK AND SINGLE DISK CARTRIDGE (figure 1-3)

The disk used has a diameter of fourteen inches and is organised in the following way:

On each surface there are 204 tracks and as both sides of the disk are oxide coated and can consequently be used, it can be said that a disk has 204 cylinders each containing 2 tracks. The maximum storage capacity being 50×10^6 bits.

Mounted on the spindle is the index and sector ring which indicates the sectors by slots. Different types of cartridges can have a different number of slots.
The speed of a rotating disk is 2400 revolutions per minute and an average access time of 33 milliseconds is realised.
A magnetic ring keeps the cartridge in a fixed position. The fixed disk is permanently mounted inside the unit.

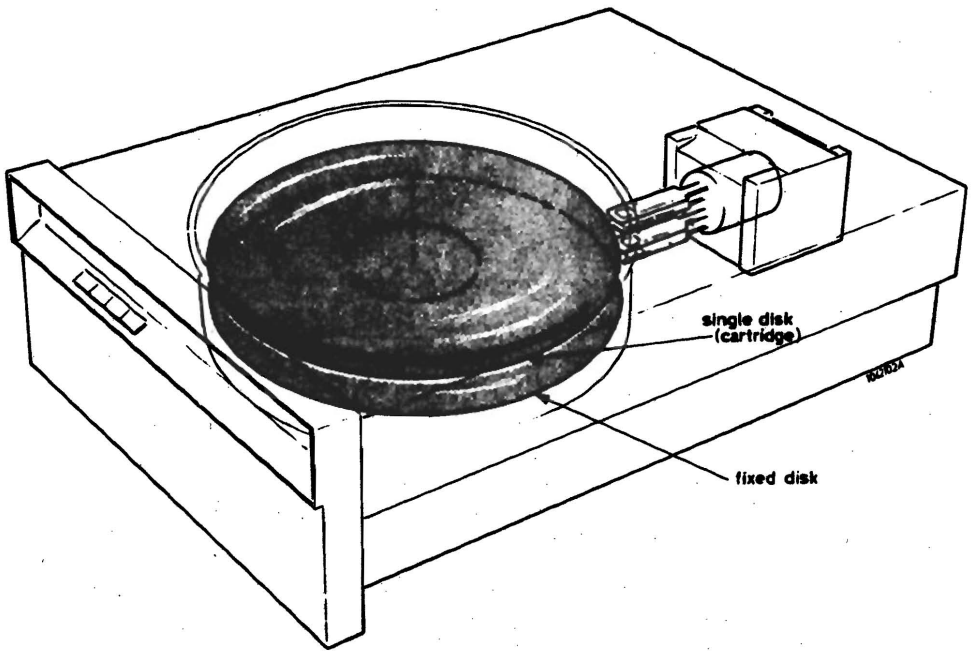

Figure 1-3 Fixed disk and single cartridge

Operation of the Power-on switch on the rear of the unit activates the power supplies, retracts the positioner and unlocks the right clamp to load the cartridge as well as the positioner lock magnet. If the Start/Stop button is now pressed the disk drive motor starts and the brushes move in to clean the disk surfaces; when the cleaning cycle is completed the positioner moves in towards cylinder 000 and the heads are loaded. This is the First Seek and is used to position the heads on cylinder 000 before sending a Ready signal to the Control Unit.
On a Normal Seek the Control Unit supplies the number of the required cylinder and the positioner begins moving towards it. Each time the positioner passes a cylinder the track count system generates a pulse which is used to determine whether the required cylinder has been reached.
When the heads are on the selected cylinder the Control Unit gives a signal to select one of the four heads, after this a write or read command is sent to the Disk Drive Unit by the Control Unit.

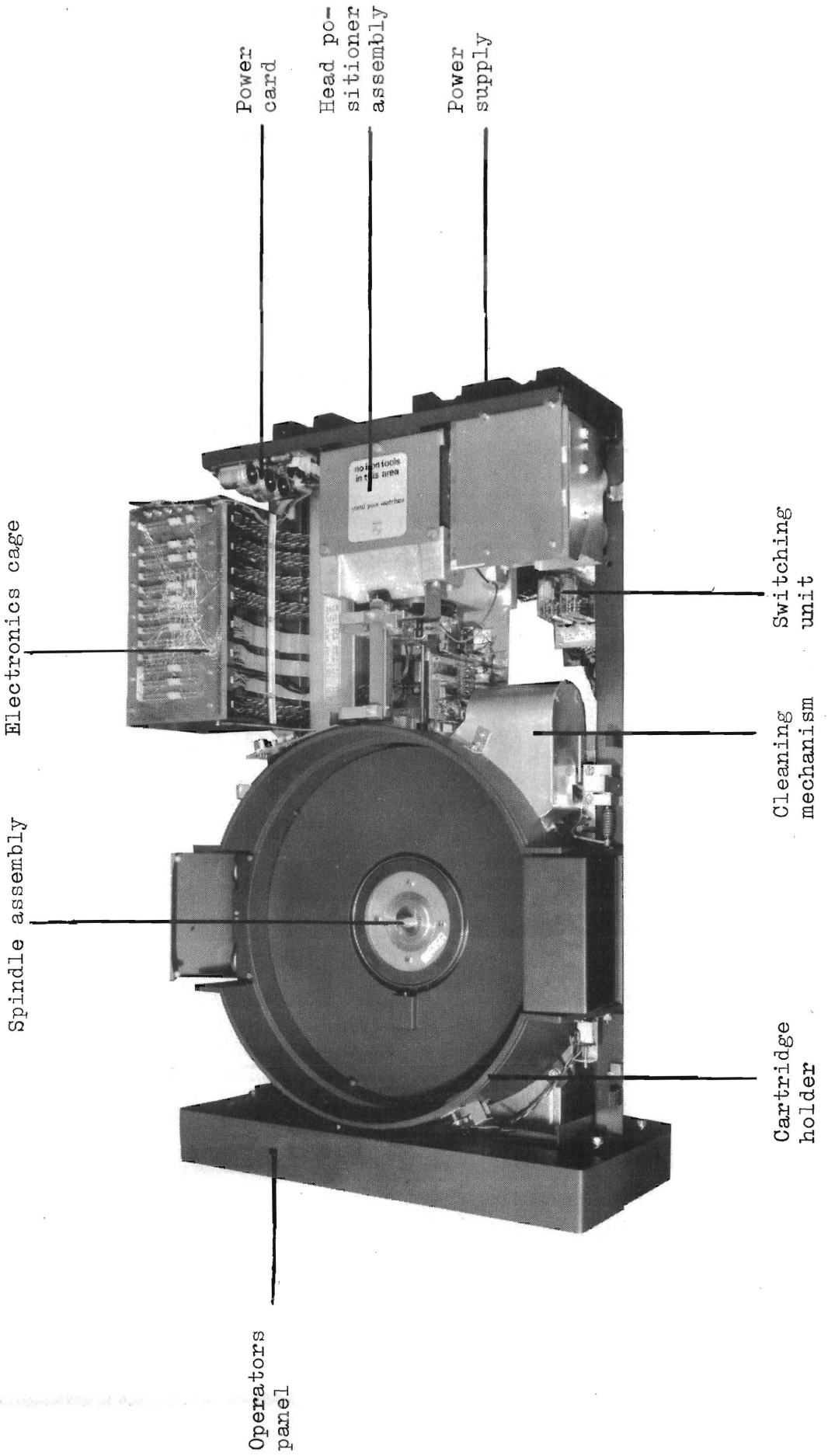

Fig. 1-4 Assembly locator

The Cartridge Disk Drive consists of several main parts. These major items are described in the following paragraphs.
For the several assemblies see figures 1-4 and 1-5.

3.1 COVERS

A total of three covers are present, two on top and one on the bottom.
All these covers are removable.

3.2 CARTRIDGE HOLDER

The cartridge holder consists of three parts, namely:
a) A cartridge holder ring which includes two clamps. One of the clamps has associated with it a protection unit (solenoid).
b) The first bottom plate at the centre of the cartridge holder ring is attached to the ring with three screws.
c) The second bottom plate is held in position by the cartridge holder.

3.3 FIXED DISK

The fixed disk is mounted between the two cartridge holder bottom plates and located on the spindle.

3.4 SPINDLE

The spindle is coupled to the drive motor via a belt.
The spindle incorporates a metal disk with blades, which, when the spindle is rotating, sucks in external air via two filters. This air is used for cooling purposes and also keeping the disks clean. The spindle is earthed to eliminate static electricity acquired by the movement of the spindle.

3.5 HEAD POSITIONER ASSEMBLY

The positioner mechanism selectively positions the read/write heads over the data track of any particular address on the fixed or removable disk. The positioner assembly contains the following components: a voice-coil actuator, which moves a

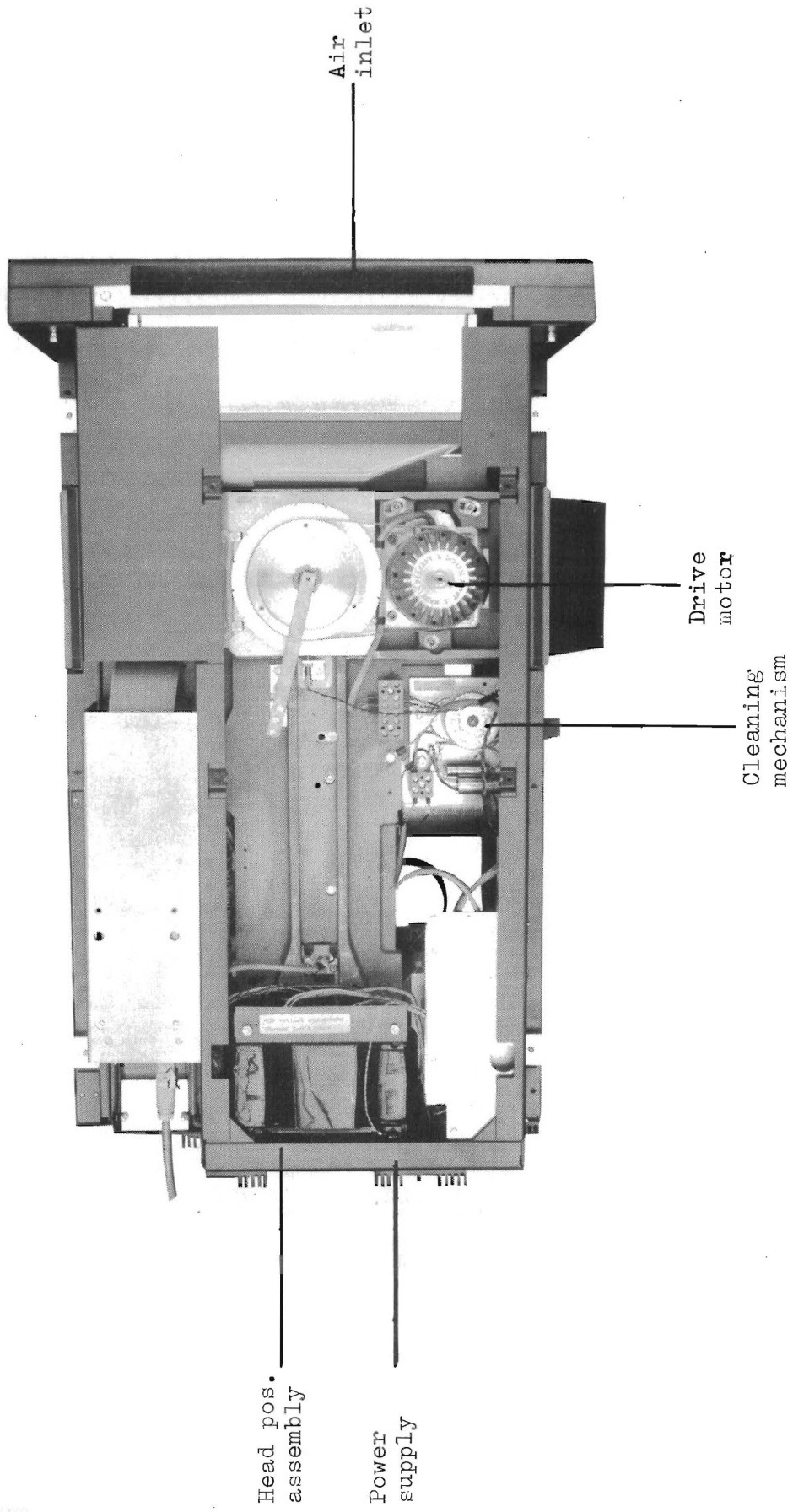

Fig. 1-5 Assembly locator lower.

carriage: the carriage which supports the heads, and carriage guides, on which the carriage moves; head loading/unloading cam, which engage the head arms; a velocity transducer and a position transducer.

3.6 SWITCHING UNIT

The switching unit contains a time meter, one fuse, three relays and the Power on/off switch.

The relays are:
- The brush motor relay.
- The drive motor relay.
- The brake motor relay, used to brake the main drive motor.

3.7 ELECTRONIC ASSEMBLIES

The main electronic assemblies are the power supply and an electronic cage.
The power supply is situated in the rear of the Disk Drive Unit and furnishes the operating voltages for all electronic assemblies, the positioner and the spindle and brush motor.
The logics, servo-electronics, read/write electronics and interface-circuits are mounted together in an electronics cage.

3.8 ELECTRONICS CAGE

The electronic cage contains all the electronics and logic needed for the unit except the read pre-amplifier and meander card.
The read pre-amplifier is located against the cartridge holder and is placed as close as possible to the heads.
The meander card is screened to prevent electrical interference to other circuits, and is positioned as close as possible to the meanders.
Plugs and cabling connect the power supply, read pre-amplifier and the meander circuit to the electronics cage.

3.9 CLEANING MECHANISM

Each time a cartridge is installed the disks must be cleaned. This is done by a cleaning mechanism which consists of four brushes driven by a cleaning motor.

3.10 OPERATORS' PANEL

The Operators' panel is located at the front of the unit. The functions of each indicator are explained in Volume II.

4.1 PERFORMANCE CHARCTERISTICS

Details Disk (both disks are the same)

Disk diameter	356 mm (14 inches)
recording surfaces	2
tracks per side	204
track pitch	0,254 mm (0,01 inch)
tracks per cylinder	2
recording method	double frequency
sectors	optional
index pulse	1 per revolution
disk speed	2400 rpm. counter clockwise
storage capacity	50 x 10^6 bits maximum

Details unit

data transfer rate	2.5M bits/s
average access time	33 $\pm$ 2 m sec.

4.2 PHYSICAL CHARACTERISTICS

Width	480 mm
height	262 mm
depth	797 mm
weight	66 kg approximately

4.3 ELECTRICAL REQUIREMENTS

Mains voltage	240, 220*, 115, 110 AC single phase with earth
mains frequency	50 Hz; 60 Hz (optional)
power consumption	500 W

* normally installed.

4.4 ENVIRONMENTAL REQUIREMENTS

	Operating	Non-operating
Temperature	+16°C to +38°C	-15°C to +65°C
Thermal shock	0,2°C per minute	1°C per minute
Relative humidity	8% to 80%	5% to 90%
Air pressure	1 BAR + 5 to -30%	1 BAR + 5 to 50%

Input signals		Output signals	
pin	signal	pin	signal
48	$\overline{\text{AB 0}}$	24	$\overline{\text{IPC}}$
51	Ground	27	Ground
47	$\overline{\text{AB 1}}$	35	$\overline{\text{IPF}}$
50	Ground	38	Ground
46	$\overline{\text{AB 2}}$	23	$\overline{\text{SPC}}$
49	Ground	26	Ground
54	$\overline{\text{AB 3}}$	30	$\overline{\text{SPF}}$
57	Ground	33	Ground
53	$\overline{\text{AB 4}}$	29	$\overline{\text{CON}}$
56	Ground	32	Ground
52	$\overline{\text{AB 5}}$	02	$\overline{\text{UR}}$
55	Ground	05	Ground
60	$\overline{\text{AB 6}}$	34	$\overline{\text{USA 1}}$
64	Ground	37	Ground
59	$\overline{\text{AB 7}}$	03	$\overline{\text{USA 2}}$
63	Ground	07	Ground
36	$\overline{\text{USL}}$	28	$\overline{\text{AT}}$
39	Ground	31	Ground
10	$\overline{\text{CS}}$	01	$\overline{\text{RDDA}}$
13	Ground	04	Ground
11	$\overline{\text{HS}}$		
14	Ground		
17	$\overline{\text{CTS}}$		
21	Ground		
58	$\overline{\text{SUS}}$		
62	Ground		
08	$\overline{\text{WRDA}}$		

Table 1-1

Cartridge Disk Drive Unit

Vol.II: Operation



Data Systems

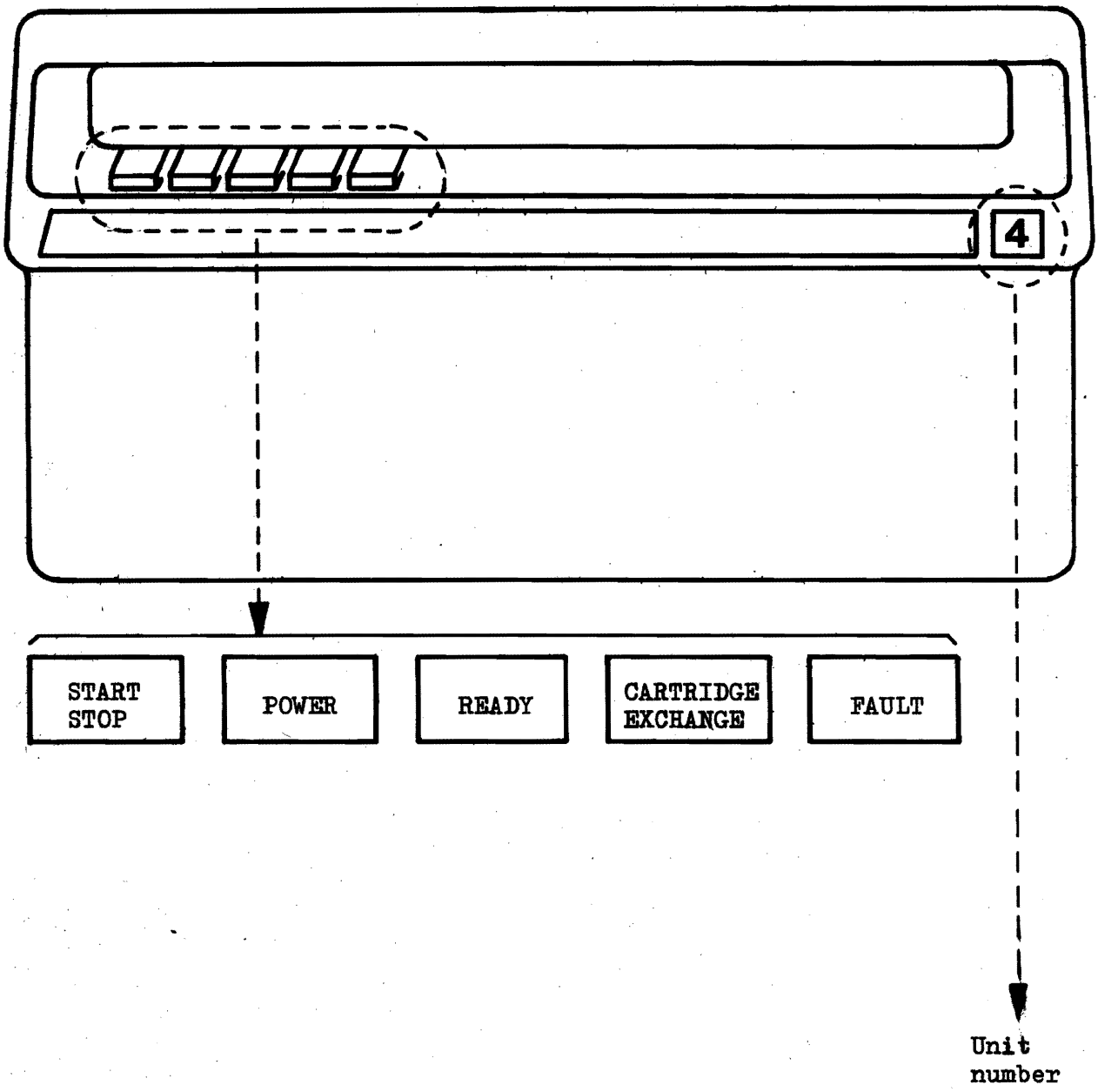

Fig. 2-1 OPERATOR PANEL

1.1 GENERAL

Operation of the disk drive is possible by non-trained personnel. The controls on the front panel are fail safe, and safety locks are present for protection of personnel and the unit.
The mechanical and electrical parts are contained inside the unit and are not be accessed by the operator.
The functions of the operator are the control of the unit by means of push buttons/indicators on the Operators' panel, and cartridge handling.
The Operators' panel (figure 2-1) comprises the following push button/indicators:

a) Power - indicator.
b) Start/Stop - push button and indicator.
c) Cartridge Exchange - indicator.
d) Fault-indicator.
e) Unit Ready-indicator.

The disk unit can be connected or disconnected with the mains supply by means of a power switch on the rear of the disk unit.

1.2 BUTTON AND INDICATOR FUNCTIONS

The following push buttons/indicators are present on the Operators' panel at the front of the unit:

Power	Indicator	When the indicator is lit it means that the mains supply is connected to the disk unit. The disk power supplies are energised.
Start/Stop	Push button/ indicator (momentary switch)	By pressing the Start/Stop button after the unit is activated (power-on), the unit can be placed in one of two modes. Start mode: Cartridge Exchange lamp off, Start/Stop indicator lamp is lit. Disk drive motor starts rotating. The cleaning cycle starts. Stop mode: Start/Stop indicator lamp is off. The disk drive motor stops rotating; finally the cartridge exchange lamp is lit.
Cartridge Exchange	Indicator	This indicator is lit if the cartridge can be replaced or installed

Fault	Indicator	This indicator is lit if the signal "unit unsafe 2" is active. When the indicator is lit, it can be extinguished by stopping and restarting the disk unit.
Ready	Indicator	This indicator is lit if the unit is ready to operate.

2.1 CARTRIDGE HANDLING AND STORAGE

It is important that the disk cartridge be properly handled and stored so that the recorded data are maintained.
A damaged or contaminated cartridge can impair or prevent recovery of data and can result in damage to the disk drive.

CAUTION

DO NOT ATTEMPT TO INSTALL OR USE A CARTRIDGE WHICH IS SUSPECTED OF CONTAMINATION OR DAMAGE.

A disk drive which has been damaged or contaminated due to use of a defective cartridge should not be operated with other cartridges until the disk drive has been inspected and/or reconditioned by qualified service personnel.
The following methods will ensure maximum protection of disk cartridges.

1) Cartridges should have the bottom cover in place at all times when the cartridge is not inserted in a disk drive. Do not allow the bottom cover to accumulate dirt or other debris.
2) Cartridges can be stored either horizontally or vertically.

CAUTION

DO NOT PLACE CARTRIDGES IN A STACK CONTAINING MORE THAN 5 CARTRIDGES.

3) Avoid exposure of the cartridge to any magnetizing force.
4) Do not store the cartridge in direct sunlight. Temperatures outside the range of 33°F (0.6°C) to 140°F (60°C) should be avoided for non-operational storage.
5) If a cartridge is dropped, it should be inspected by a qualified service representative before it is used. Internal, as well as external, damage to the cartridge can result when a cartridge is dropped.
6) Cartridges should be labeled only in the handle recess area.

2.2 LOADING (figures 2-2, 2-3 and 2-4)

a) Wait until the cartridge exchange lamp is lit.
b) Pull the disk drive out of the rack to the first stop position.*
c) Open up the two clamps.

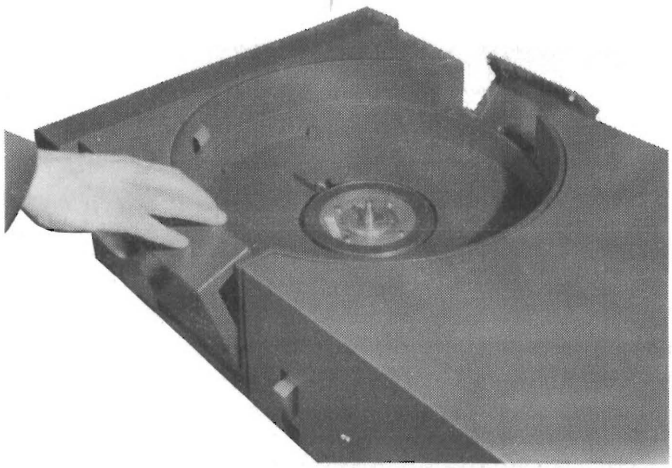

Fig. 2-2

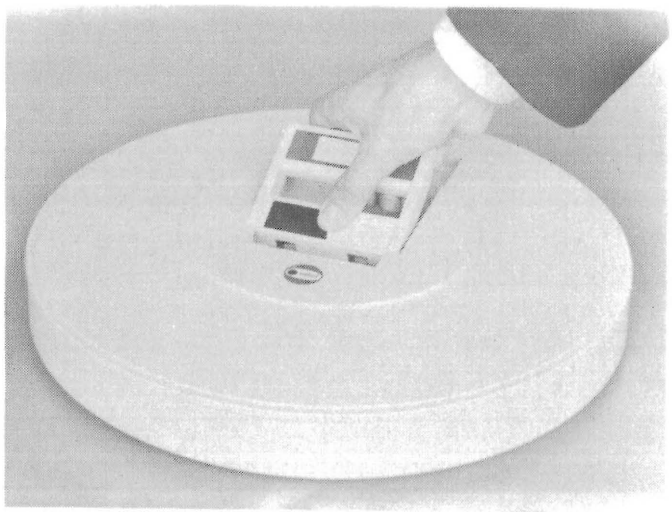

Fig. 2-3



Fig. 2-4

d) Push the de-coupler in the handle of the cartridge to the side and by lifting the handle, the bottom cover can be removed.

Note: Exercise extreme care when inserting the cartridge so as not to damage the cartridge and/or the disk drive.

e) Insert the cartridge into the correct position and fold the handle into its recess.

Note: Correct positioning of the cartridge has been obtained, when the cartridge cannot be rotated or tilted.

f) Place the bottom cover, inverted, on top of the cartridge.
g) Close the two clamps.
h) Push the disk drive back into the rack.

⌘ Not by the stand alone model.

2.3 UNLOADING (figure 2-5, 2-6 and 2-7)

a) Stop the cartridge disk drive by pressing the Start/Stop button (light goes off).
b) Wait until the Cartridge Exchange light is on.
c) Pull the disk drive out of the rack to the first stop position.⌘
d) Open up the clamps.
e) Remove the bottom cover.
f) Push the de-coupler in the handle of the cartridge to the side, and by lifting the handle, the cartridge is removed from the holder.
g) Insert the cartridge into its bottom cover and fold the handle back into its recess.

⌘ Not by the stand alone model.

Note: It is recommended that, when the unit is not in use, a cartridge should be left in position to prevent the entry of dust.
If the unit is not used for some time Start/Stop two or three times to properly clean the disk surfaces.

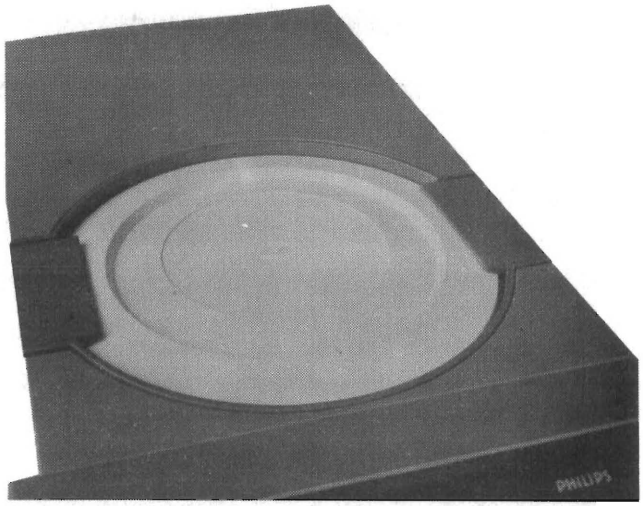

Fig. 2-5



Fig. 2-6

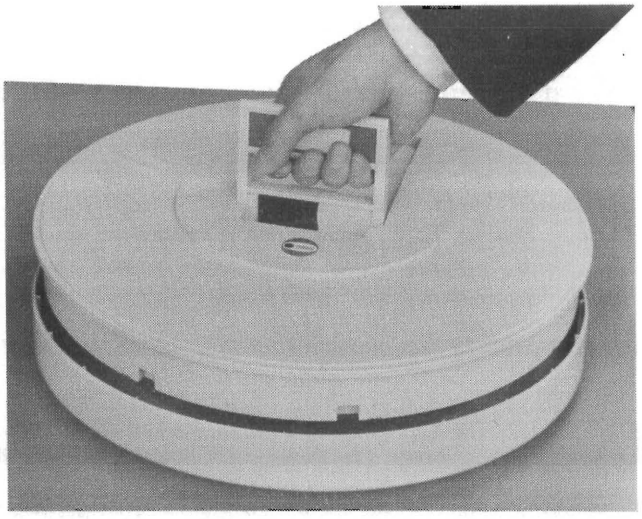

Fig. 2-7

The handling of the disk drive requires a starting and a stopping procedure.

3.1 STARTING PROCEDURE

a) Switch on the power at the rear of the disk unit. The power and Cartridge Exchange indicators are lit.
b) Both clamps can be opened and the cartridge inserted.
c) Press the Start/Stop button on the Operators'panel. The Start/Stop indicator becomes lit.
d) Wait until the Unit Ready indicator is lit.
e) The unit is ready to accept signals from the Control Unit.

3.2 STOPPING PROCEDURE

a) Press the Start/Stop button on the Operators' panel. The Start/Stop indicator will be extinguished.
b) Wait until the Cartridge Exchange lamp becomes lit.
c) If it is necessary to change the cartridge, see section 2.2 of this volume then follow the starting procedure, section 3.1 (c) onward in this volume.
d) If the unit is required to be switched off, this can be done by means of the switch on the rear of the disk unit. The associated light will be extinguished.

Cartridge Disk Drive Unit

Vol. III: Theory



Data Systems

1. GENERAL

This section deals with the theory of the Disk Drive Unit. Two block diagrams (figure 3-1 and 3-2) are referred to when explaining the actions during operation.
The relationship between the main blocks of the Disk Drive Unit and the interfacing principles employed for communication between the Control Unit and the Disk Drive Unit are described in detail. The functions are described in conjunction with the logic diagrams present in Volume IV.

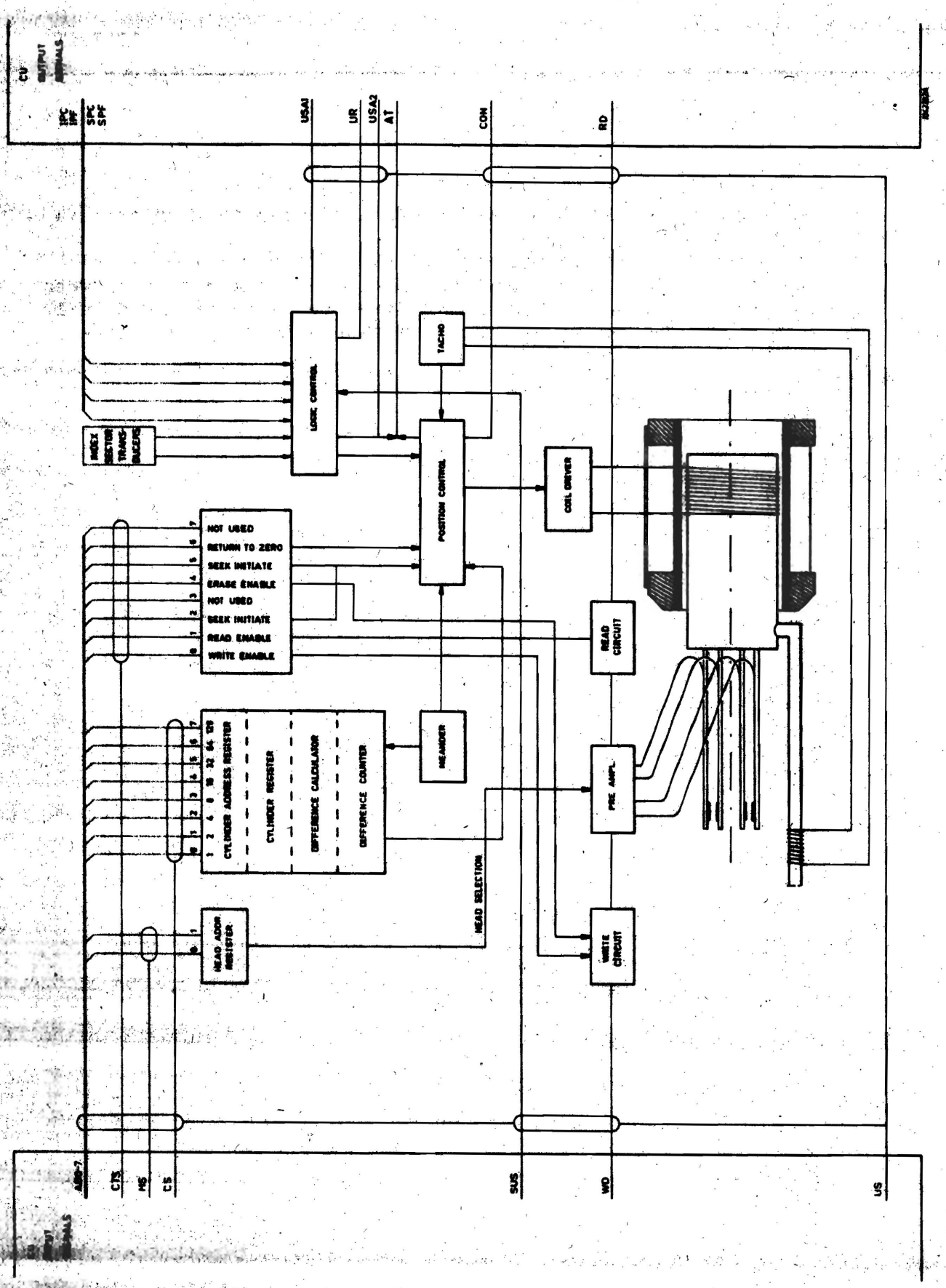

Figure 3-1 OVERALL BLOCK DIAGRAM

After the power has been switched on and the starting procedure initiated, some time elapses before the Cartridge Disk Drive Unit (CDD) is ready. When the CDD is ready, the interface signal UR (Unit Ready) is made active. At such time, the Control Unit can select the CDD by means of the interface line US (Unit Select). The Cylinder Select signal CS, together with the Address Bus lines AB0 through AB7 indicate the required cylinder address. The signal CTS (Control Select), together with signals AB2, AB5 or AB6 can initiate a seek action.

After the seek is finished, the interface signal CON (on-cylinder) is raised, indicating the heads are positioned on the selected cylinder. At this juncture, a head is selected by the tag line HS (Head Selected), together with the interface bus lines AB0 and AB1. When the head has been selected, signal CTS is raised again, together with the interface lines AB0 and AB1, or AB4 to start data processing.

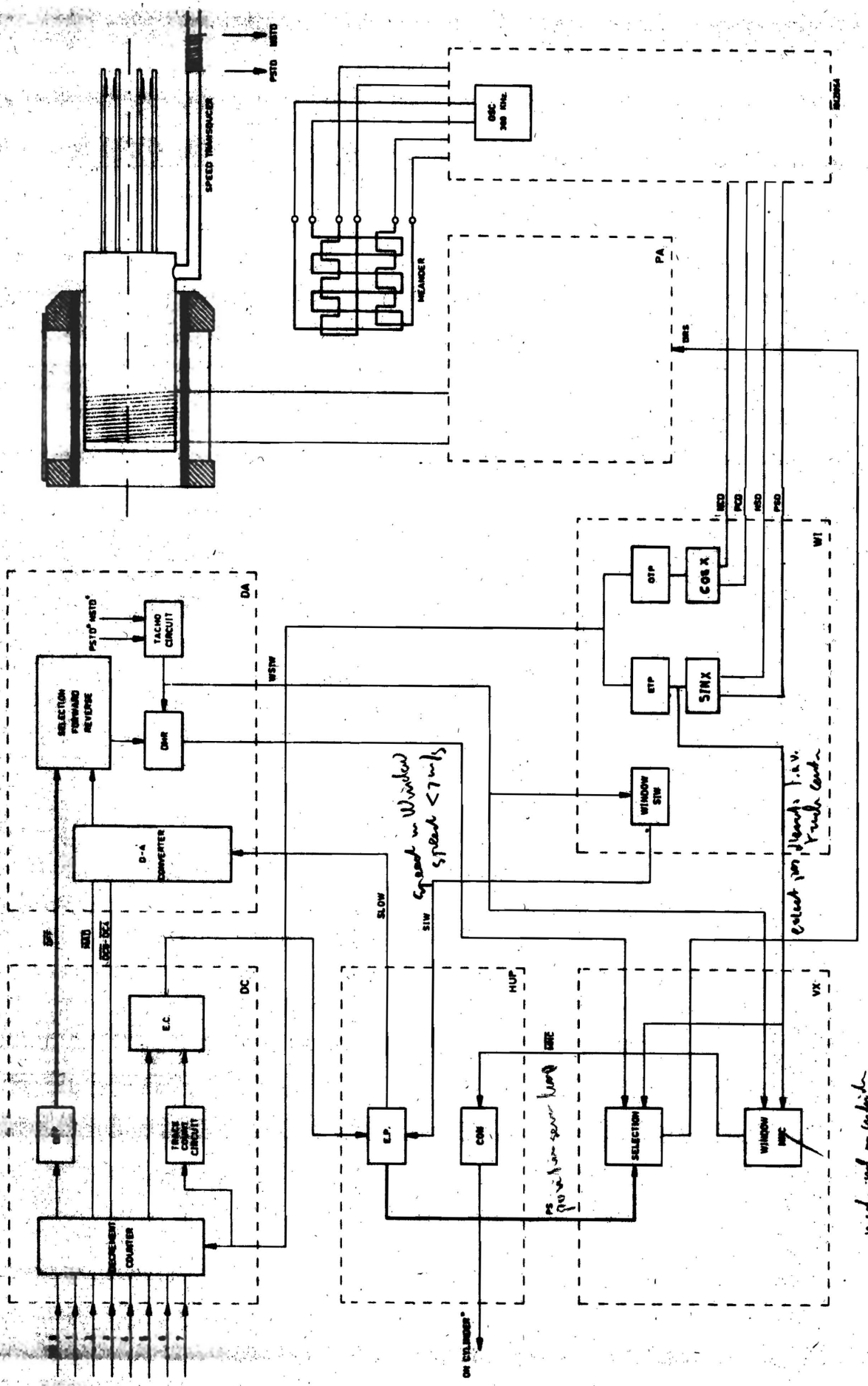

Figure 3-2 POSITIONING BLOCK DIAGRAM

Section 2 of this volume dealt mainly with the interface dialogue. A more detailed description of the result of the dialogue is described here.

When the Cylinder Select command is received, the Cylinder Address register is compared with the Cylinder Register containing the last cylinder address. The result is stored either normally or inverted and sent to the Difference Counter.
Inversion only takes place if the direction of the seek is reverse. The coil driver is activated via the Position Control logic and electronics. The current through the coil will move the head across the track until the Difference Counter has reached its pre-selected count. This count down is realised by the Meander circuit which gives a pulse for each track passed to step the Difference Counter.

Thirty-one or less cylinders before the selected cylinder the movement becomes controlled by the Difference Counter. The current is reversed and deceleration of the positioner ensues, following a pre-selected curve. The moment the count is reached, half a cylinder before the selected cylinder, the positioner is fully decelerated by a maximum current pulse. The control of the positioner changes from the Velocity mode to the Positioning mode, moving the heads to the track centre.
At this juncture, the interface signal CON is raised, enabling read or write actions to be performed.
The logic control block monitors all actions, detecting error or unsafe conditions.

Index pulses of the fixed disk are used to check the disk speed. Other functions of the index and sector pulses are beyond the scope of this manual. All input and output interface signals (except the index and sector pulses), signal AT (Attention) and SUS (Set Unsafe) are gated with the selection signal US (Unit Select).

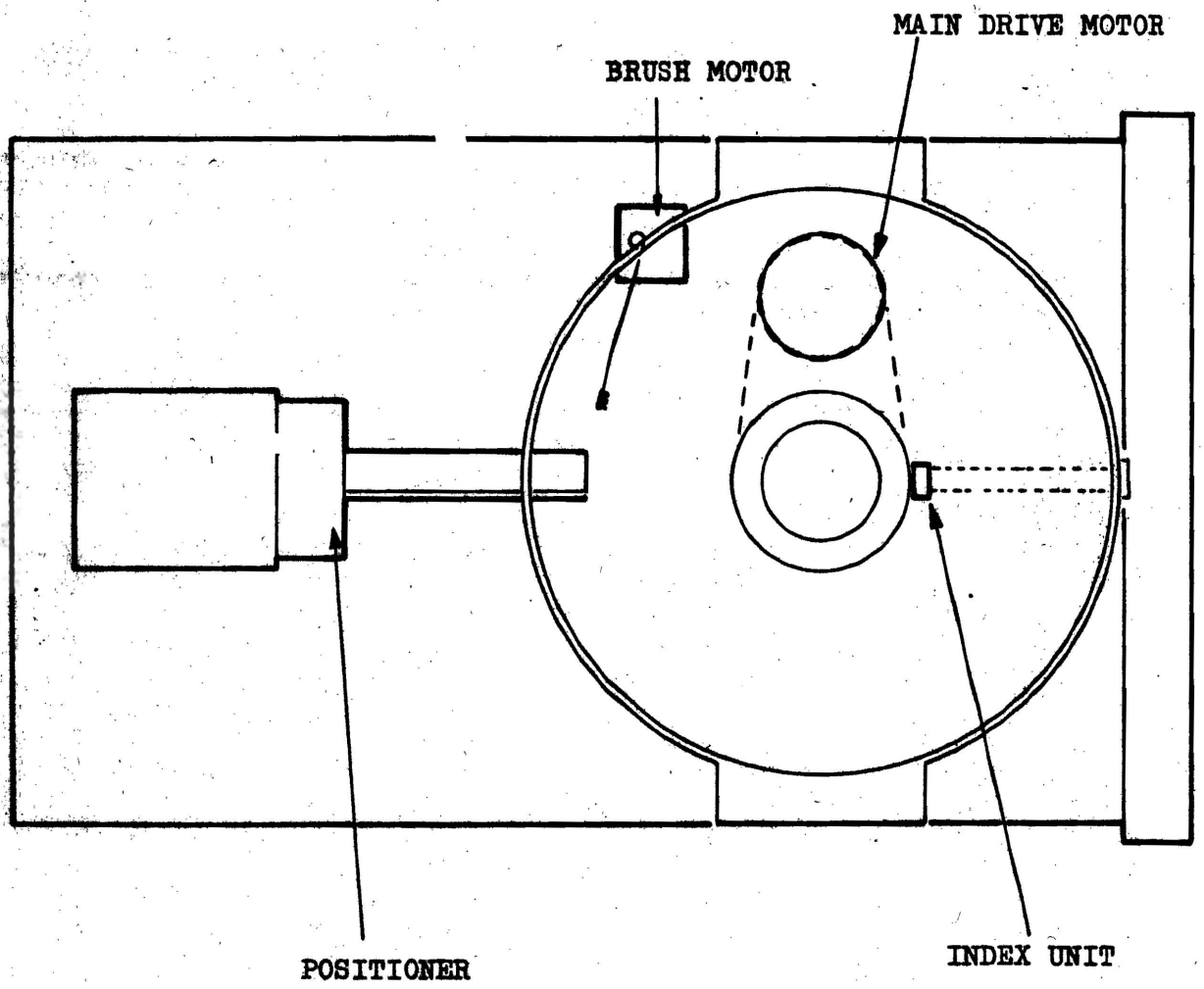

Figure 3-3 PRINCIPLE COMPONENTS

In the description of a normal Power-on and Start cycle a number of main blocks present in the cartridge disk drive are described.

4.1 MAIN DRIVE MOTOR

If a cartridge is placed on the disk drive and the unit started, the asynchronous main drive motor is started. A belt drives the spindle on which the cartridge is placed. The fixed disk is kept in position at the lower part of the spindle and centred, if properly fixed, while the cartridge is mounted on top of the spindle.
Within sixty seconds of starting the main drive motor the cartridge will be revolving at its' nominal speed of 2400 rpm.

4.2 BRUSH MOTOR

2.5 seconds after the main drive motor is started, a timing signal activates a small low speed motor (about 300 rpm). This motor is geared down so that 3 revolutions of the motor occur during the remaining 20 seconds whilst four brushes sweep over the four surfaces during the Cleaning cycle.

4.3 INDEX/SECTOR TRANSDUCERS

For the fixed disk as well as for the cartridge a magnetic transducer is present which detects the slots in the index/sector ring of the cartridge and the index/sector of the fixed disk. The latter ring is fixed to the spindle. In the electronics the detection of slots is transformed into logic pulses.

4.4 POSITIONER

Providing that the correct speed has been attained by the spindle, the unit starts the first seek so that the positioner moves inwards.
The positioner is one of the critical parts of the disk drive, and is balanced out to overcome vibrations and incorrect loading of the heads. The positioner incorporates a coil, a tachometer, a prime meander circuit and the heads.
By sending a current through the voice coil in one direction, the carriage is moved in that direction. When reversing the

current the carriage movement is reversed.

4.5 SPEED TRANDUCER

The speed transducer consists of a magnet, fixed on the positioner arm, moving through the centre of a coil attached to the base plate of the unit.
The voltage induced in the coil is directly related to the speed of the positioner arm. This voltage is used to control the speed.

4.6 DISPLACEMENT PICK-UP SYSTEM.

For measuring the displacement of the carriage a "meander system" is applied.
The meander consists of 2 printed cards. One card is mounted on the carriage and contains a coil which is printed in meander form on the card. This one is called the primary meander.
The other card is fixed on the base plate and contains two coils, which are printed, also in meander form. These are called the secondary meander A and B.

When the positioner moves, the prime meander passes the second meander. The pitch of the meander tracks is twice the track distance (figure 3-4). All three meander circuits have voltages with a frequency of 300 kHz. The secondary meander voltages become modulated by the movement resulting in, after demodulation, a sine-wave and a cosine wave. These signals are sent to the positioner control and track count circuits.

4.7 AREA INDICATOR

The area indicator is an opto-electronic device which is mounted on the base plate. When a "flag" which is mounted on the carriage passes the indicator, the logic output of the indicator is inverted.
The output signal of the indicator, in combination with some other logic signals determines the position of track 000.

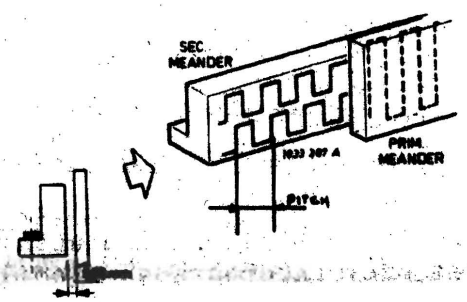

Figure 3-4 MEANDER TRACK PITCH

General

Several Cartridge Disk Drives may be connected to one Control Unit.
Each unit is selected by the interface signal Unit Select (US), and is connected to the Control Unit with an asymetrical cable.
The principle of the interface is the so called "STAR TYPE".

5.1 LOGIC LEVELS

The "0" logic level shall be between 0V and + 0.8V
The "1" logic level shall be greater than +2.4V (nominal +4.5V)
A signal with an inversion bar ($\overline{X}$) is active for a logic "0".
A signal without an inversion bar (X) is active for a logic "1".

5.2 INPUT SIGNALS

The interface input signals of the disk drive unit are:
a) Unit Select (USL)
b) Three tagline signals: Cylinder select (CS)
Control select (CTS)
Head select (HS)
c) Eight Address & Busline (AB0-AB7)
d) Set Unit Unsafe (SUS)
e) Write Data (WRDA)

5.2.1 Unit Select signal

With the Unit Select signal a certain disk drive can be selected.

5.2.2 Tagline and Address Busline

Although in principle data can be written on an arbitrary place of the disk surface, the data are normally written on fictive concentric circles named tracks.
The pitch of these tracks is determined by the meander system.
The CDD has a maximum of 204 tracks per disk surface.
The normal procedure is that the control unit, by combination of tag line and address & busline signals, indicates on which track the heads should be, then selects one of the four heads and, when the heads are settled on the right place, gives write or read commands.
Figures 3-6 and 3-7 show how the various combinations of tagline signals and address & busline signals are interpreted by the disk drive unit

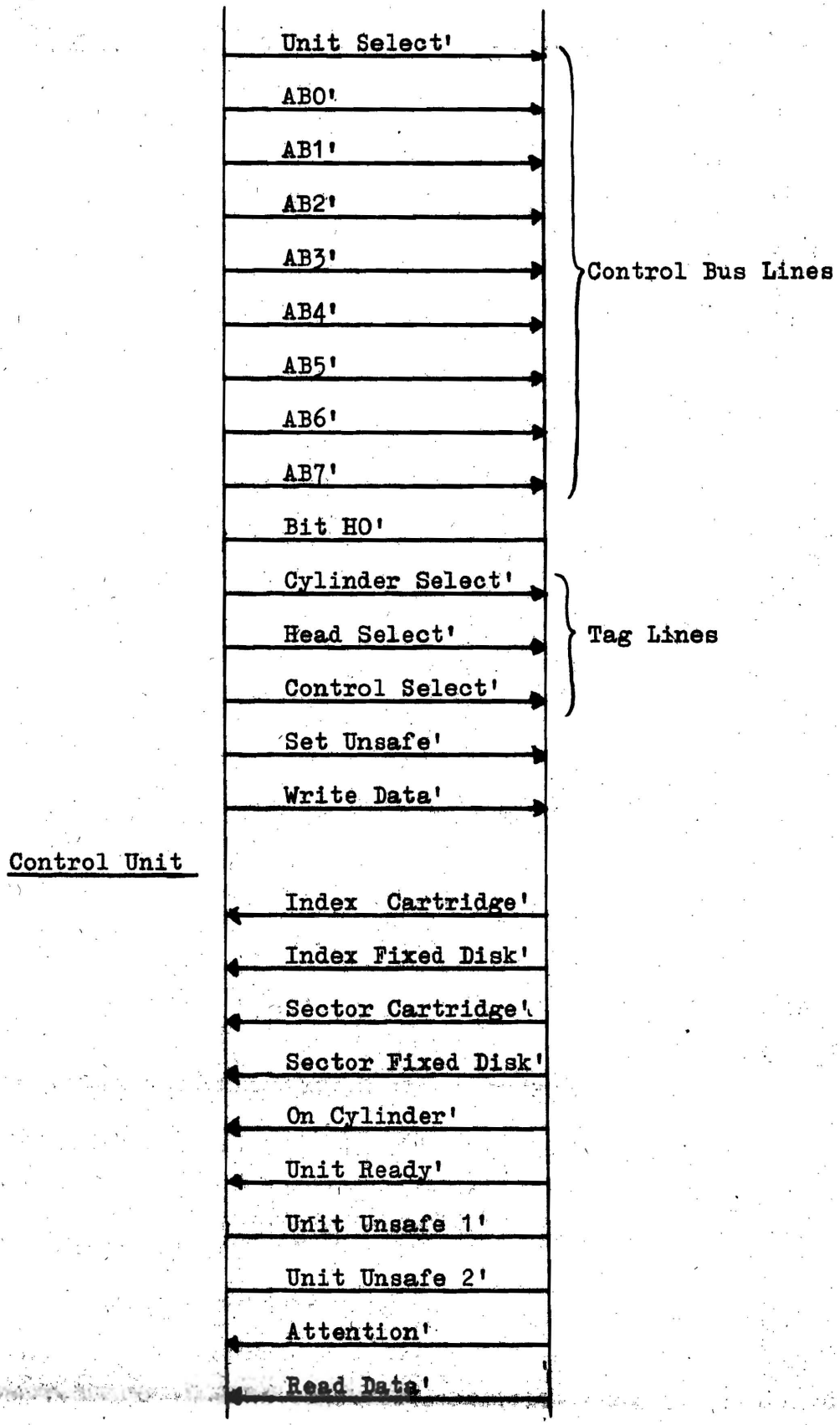

Figure 3-5 I/O INTERFACE

	Cylinder select signal active	Head select signal active	Control select signal active
Add.& Busline AB0 active	1	0/1	Write enable
" AB1 "	2	2/3	Read enable
" AB2 "	4	Not used	Seek initiate
" AB3 "	8	Not used	Reset unsafe
" AB4 "	16	Not used	Erase enable
" AB5 "	32	Not used	Seek initiate
" AB6 "	64	Not used	Return to zero
" AB7 "	128	Not used	Not used.

Figure 3-6 Tag and Control Bus lines

Add.& Busline AB0	Add. & Busline AB1	Head Select signal	Selected Head nr.	Corresponding Disk surface	
Not active	Not active	Active	0	upper	car-tridge
Active	Not active	Active	1	lower	
Not active	Active	Active	2	upper	fixed disk
Active	Active	Active	3	lower	

Figure 3-7 Head selection

Remark: The combination of Address & Busline signals and the Cylinder Select signal indicates the new track to which the heads should go.

Example
A seek to cylinder 50 is executed and a read enable command is given for the lower head of the cartridge.

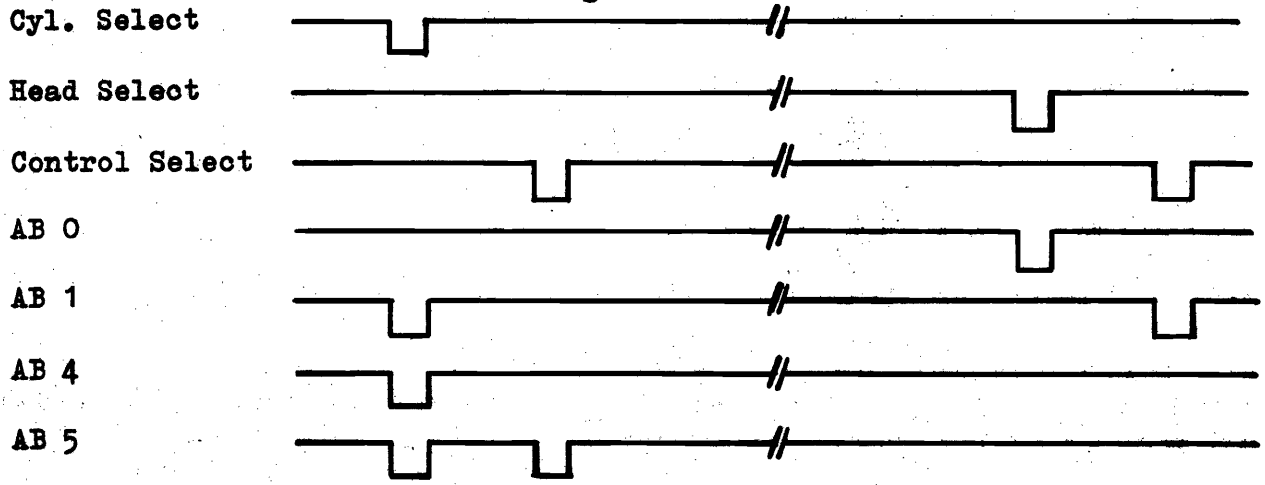

Figure 3-8 Seek to cylinder 50

logics.
An example explains the use of these lines clearly (Fig 3-8)

5.2.3 Set Unit unSAfe.

This command can be given by the Control Unit in case of power failure of the Control Unit.'
The Disk Drive Unit turns to the unsafe 2 mode, which means that the heads are retracted and the write electronics are disabled so that no damage either to Disk Drive Unit or data can occur.

5.2.4 Write Data

The write data signal consists of serialized data to be written on a disk surface.
Fig. 3.9 shows a write data signal.

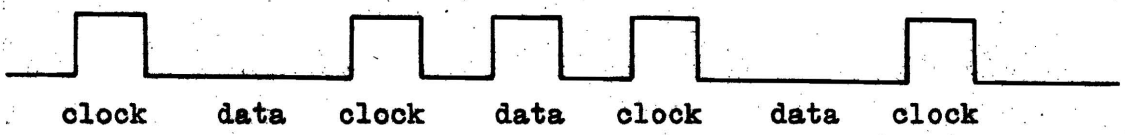

Figure 3-9

a) Duration of both clock and data pulse (if present) - 100 nsec
b) Time between a clock and data pulse - 100 nsec
c) Duration of a bit cell - 400 nsec
A bit cell is the area between the beginning of a clock pulse and the beginning of the next clock pulse.

5.3 OUTPUT SIGNALS

The output interface signals of the disk drive unit are:

a) Index Signal Cartridge (IPC)
b) Index Signal Fixed Disk (IPF)
c) Sector Signal Cartridge (SPC)
d) Sector Signal Fixed Disk (SPF)
e) On Cylinder (CON)
f) Unit Ready (UR)
g) Unit Unsafe 1 (USA1)
h) Unit Unsafe 2 (USA2)
i) Attention (AT)
j) Read Data (RDDA)

5.3.1 Index Pulse Cartridge Fixed Disk.

Once per revolution, an index pulse becomes active at the moment the index slot passes the index and sector transducer.
This pulse provides the physical beginning of each track and is not gated with the unit select signal.

5.3.2 Sector Pulse Cartridge (Fixed Disk)

Each time a sector slot passes the index and sector transducer, the beginning of a new sector is signalled. With the aid of sector pulses a track can be divided into pieces.
This signal is not gated with the Unit Select signal.

Note: There is no relation between the index/sector signals of the cartridge and the index/sector signals of the fixed disk.

5.3.3 Unit Ready signal

The activation of this signal indicates that the Disk Drive Unit is ready to operate, that is to say it is ready to receive instructions and to transmit such output signals as are not gated.
This signal becomes active when:
- a cartridge has been inserted,
- The disk has attained a speed of 2400 rpm, nominal,
- when the heads are loaded for the first time, and the drive is completing the first seek.

The signal is deactivated when the operator stops the drive.

5.3.4 On Cylinder

This signal, when active, indicates that the heads are positioned and the seek operation is finished. the unit can accept read/write or another seek command.

5.3.5 Unit unSAfe 1

This signal becomes active when the positioner drifts away from the correct track position. In this situation the unsafe 1 procedure is entered and the following series of actions are carried out:
- write protection is set,
- the heads are returned to track 000,
- the unsafe 1 signal is set,
- when the heads are at track 000 an Attention signal is sent.

The Unsafe 1 signal can be reset by issuing a Return To Zero command or, by using a Reset Unsafe command.

5.3.6 Unit unSAfe 2

When the Unit unsafe 2 signal becomes active it indicates that an unsafe procedure has been carried out as result of one or more of the following conditions occuring in the Disk Drive Unit:
1) there is write current but no erase current,
2) there is erase current but no write current,
3) there is write and/or erase enable when the heads are not on cylinder,
4) there is write and/or erase enable at the same time as there is read enable,
5) there is alternating write current in only one half of a head coil,
6) more than one head is selected,

7) the heads pass the minus 001 track position, traveling in the retracting direction, without the Disk Drive Unit stopping,
8) the speed of rotation of the disk is incorrect,
9) an emergency brake is applied as a result of one of the following conditions:
   a. the positioner speed exceeds a specified maximum,
   b. the seek time is too long,
   c. mains power is not present,
   d. D.C. voltages +12V, -12V and +5V are not present,
   e. the Set Unsafe signal is active.

The above listed conditions cause the Set Unsafe 2 procedure to be entered if they persist for a period in excess of the following times:
conditions 1 and 2: 60 /usec
all other conditions: 0,1 /usec.
The unsafe 2 procedure involves, in the sequence given, the actions shown below:
- the Unsafe 1 signal is set
- write protect is set after maximal 150/usec.
- positioner, if moving, is slowed down
- heads are returned to the retracted position.

The setting of the Unsafe 2 signal results in the setting of the Attention signal.
The Unsafe 2 signal may be reset only by stopping and restarting the Disk Drive Unit.

5.3.7 ATtention.

The activation of the Attention signal will indicate to the Control Unit that a change of positioner status has occured within the Disk Drive unit. The signal is activated in three situations, these being:

1. When a seek operation has been completed, including a seek to zero,
2. when the Unsafe 1 signal is activated,
3. when the Unsafe 2 signal is activated.

The Attention signal will remain active until the operator switches off the Disk Drive Unit or until either a read enable command is given or a seek is initiated. A seek is initiated when:

- a seek command is given,
- a return to zero command is given,
- an unsafe 1 condition exists,
- an unsafe 2 condition exists.

The Attention signal is not gated by the Unit Select signal.

5.3.8 Read DAta

The Read Data line is used to transmit recovered read data from the Disk Drive Unit to the Control Unit. The data consists of a stream of serialised bits.

6.1 SERVO SYSTEM

The servo system is used to position the heads at the required cylinder and to maintain this position.
Functional parts of the servo system are:

1. the voice-coil.
2. The Power Amplifier (PA).
3. the meanders
4. the speed transducer
5. the area indicator
6. the logic control
7. three cards, DA,VX,WI

DA is a digital to analogue convertor
VX determines the speed and position
WI is an indication for several windows

In this Servo System two different control loops give the possibility of directing the heads and maintaining them in position.

1. The speed servo loop.
   Is active during a seek and moves the heads in the neighbourhood of the end position resulting in a low final speed.
2. The position servo loop.
   Is active when the heads are near the desired cylinder to locate and maintain them in this position.

6.2 VELOCITY AND ACCELERATION

When re-positioning over 64 tracks or less mainly acceleration and deceleration forces are used. The friction force will be ignored in order to position over any distance in the shortest possible time. In the first part of the movement a maximum acceleration is needed, in the second part a maximum deceleration is needed.

The velocity curve is as follows.

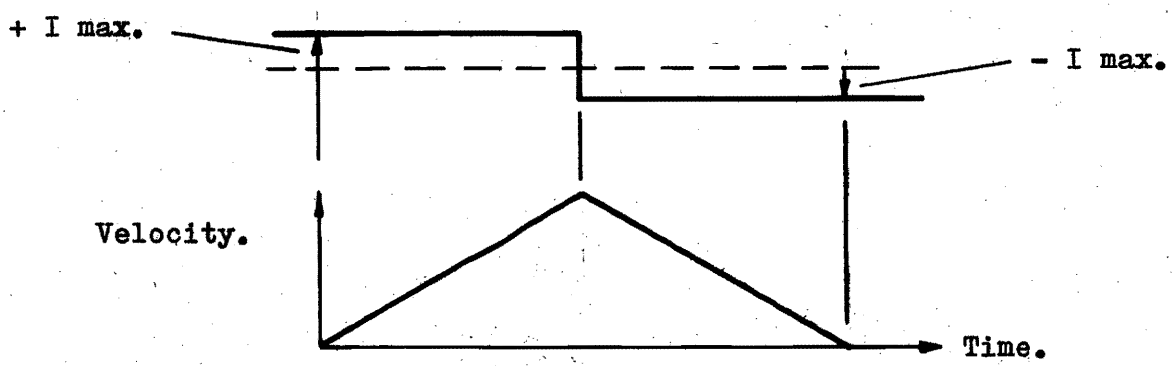

Figure 3-10

When the movement will be more than 64 tracks a flat top is made in the velocity curve, during this period there is no dissipation in the voice coil. A slight increase in the random access time results from this measure.

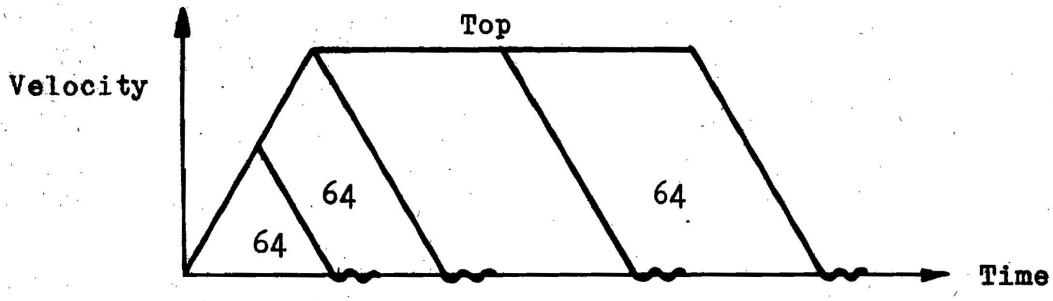

Figure 3-11

The flat top is made in such a way that with a maximum count, usually 200 cylinders to travel, the maximum velocity will be reached within the first 32 cylinders.

6.3 MEANDER SYSTEM

The meander system consists of two printed cards (figure 3-12)

1. Primary, which is mounted on the carriage and contains one coil in a meander form.
2. Secondary, fixed on the base plate and containing two meander forms A and B on the card.
   The meander forms A and B are shifted half the track pitch from each other.

When the carriage moves the primary meander passes along the secondary meander.
The pitch of the meander "t" is twice the track distance. The clearance between the meanders is 0.08 mm. The primary meander is fed with a 300 khz. sine wave voltage. In the secondary A and B meanders the induced sine wave is amplitude modulated. The amplitude depends on the position of the primary with respect to the secondary meander.

Throughout, the amplitude depends on the cylinder positioning. The output voltages are demodulated into the signals sin X and cos X on the meander card.

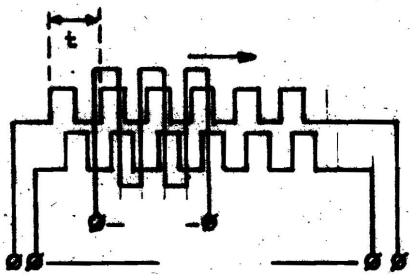

Figure 3-12

6.4 VOICE-COIL SYSTEM

The required acceleration and deceleration forces are generated with a voice-coil system. The voice-coil is mounted on the carriage and is circular in form.
The short voice-coil can move in a long magnetic field.
Depending on the direction of the current through the voice-coil it is accelerated or decelerated.

The current through the voice-coil is determined by the Power Amplifier by means of a feedback system.
The Power Amplifier consists of two parts:
a) The Power Amplifier card which is mounted in the electronic cage.
b) A power stage, driven by the Power Amplifier card and in turn driving the voice-coil.
The transistors of the power stage are mounted on heatsinks at the rear of the disk unit.
The Power Amplifier card obtains its input from card VX.

6.5 SERVO OPERATIONS

To generate a required speed.
The number of cylinders which have to be passed during a seek is stored in the Difference Counter, DC0 - DC7. During the seek this counter is decremented by one each time a track is passed, this is done by the count pulses derived from the SINX and COSX meander signals.
The 5 least significant bits of the DC counter, DC0 - DC4, are connected to a digital / analogue converter DA which converts the contents of DC0 - DC4 into an analogue value. DC0 -DC4 are only active if the contents of DC is less than 32, in other cases the output of DA is set to maximum by the signal $\overline{MAD}$.

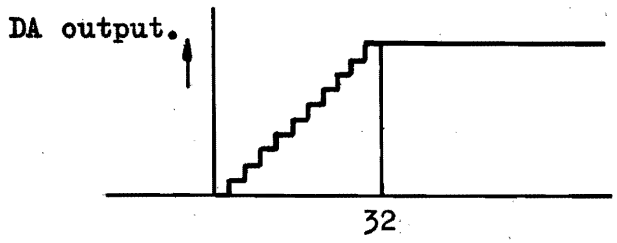

Figure 3-13

The output of DA is fed to a Resistor Diode Network, RDN, which converts the DA output into a voltage which represents the required speed of the positioner as a function of the position. (When the contents of the difference counter is greater than 32 the voltage will be increased by an extra voltage produced by the signal DE ($\overline{MAD}$).

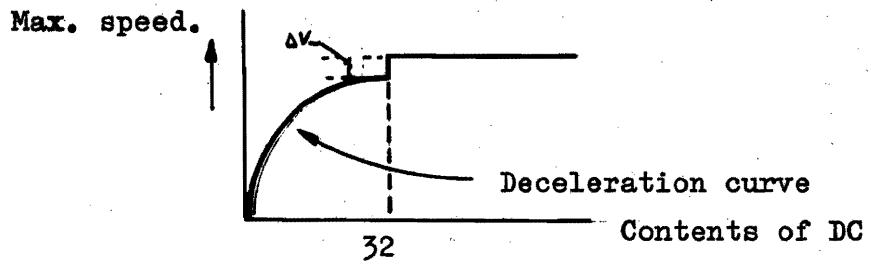

Figure 3-14

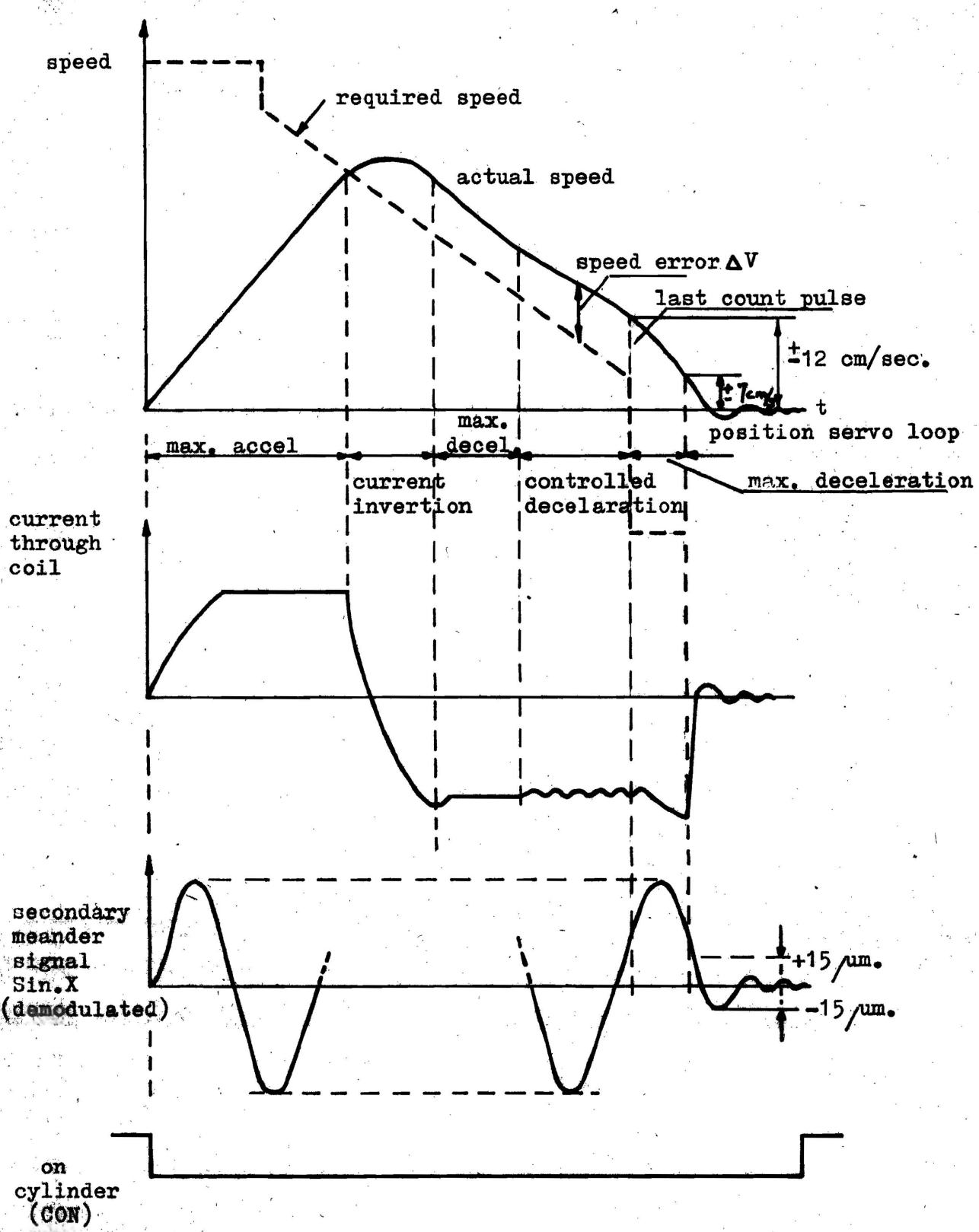

Figure 3-15 VELOCITY DIAGRAM

Figure 3-15 shows that the speed may be high if the distance is far from the final position and, when the final position is approached the required speed decreases. (ΔV is added to shorten the positioning times over long distances).

The non-linear form of the "deceleration curve" is determined by the requirement that the deceleration must be constant during the deceleration of the positioner.

The actual speed is compared with the required speed. The actual speed is measured by the speed transducer. The difference in voltage between actual speed and required speed drives the Power Amplifier. As the servo system is a closed loop (feedback) system, the servo system ensures that the difference between actual speed and required speed is as small as possible.

Actions during a seek.

1. The speed servo loop will be switched with the signal $\overline{PS}$.

2. The big difference between the required speed and the actual speed causes maximum acceleration of the positioner.

3. When the actual speed equals the required speed the current is inverted in the case of a seek of less than 64 tracks.
   In the case of a seek over more than 64 tracks the voice-coil current will be approximately 0 during the flat top part of the velocity curve. Thirty two tracks before the required position the current is inverted.

4. The time necessary to invert the voice-coil current is relatively high so , after inversion of the current, the required speed will already have decreased slightly. Therefore, the positioner will have maximum deceleration for a short time; until the required speed is reached.

5. After the required speed is reached the deceleration will be controlled by the required speed.

6. At the moment that the last count pulse OTP or ETP appears, half track distance before the final position, the actual speed will be approximately 12 cm/sec., independent of the distance covered.

7. A short period of maximum deceleration will follow, produced by the signal MAD.

8. When the actual speed is less than 7 cm/sec., indicated by the signal SIW, the signal PS will activate the position servo loop.

9. The exact position of the heads with respect to the track centre is indicated by the SINX signal.

10. The voltage level indicating the distance from the track centre is proportional to the distance change, and is fed to the servo system.

11. The servo system locates the positioner on the track centre. When it is settled within 15 /um. of this centre after some delay (1.5msec) the "On Cylinder" signal appears.

6.6 POSITION SERVO LOOP

The position servo loop is initiated less than half a track before the desired cylinder.
Half a track before the desired cylinder maximum deceleration of the positioner is produced by the signal MAD. When the speed has fallen to a certain level the signal SIW sets and causes the servo system to enter the position servo loop.
In the position servo loop the distance between the momentary position and the track centre is measured and converted into a voltage (SINX). This voltage is fed to the power amplifier which, in turn, drives the positioner to the track centre. Because this would result in an undamped vibration around the track centre a differentiating circuit is added to provide the necessary damping.

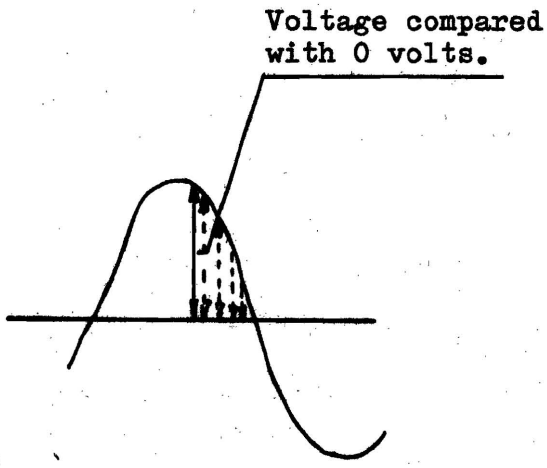

Figure 3-16

6.7 ADDITIONAL CONTROL SIGNALS

To reverse the direction of movement the output of the DA converter is inverted by the signal $\overline{\text{DFF}}$ (Direction of Force Forward).

For special seeks (return to zero, reverse to retracted) the DA convertor is kept on a low level by the signal SLOW.
The positioner then moves with a speed of 10 cm/sec.

Because the displacement voltage is a sine wave as a function of the position signal SINX has to be inverted if the positioner is located on an odd numbered track. In that case the logic signal SPE (Select Positive Edge) is inactive.

6.8 WINDOW FUNCTIONS

The servo electronics issues several logic signals according to the analogue situation.
These functions are performed by windows and comparators.
A window is looking at the absolute value of its' input voltage and delivers a logic signal when the input voltage exceeds a certain level, called the threshold level.

A comparator only looks at the sign of the input voltage. When the input is positive it delivers a logic "0" and when the input is negative it delivers a logic "1".

Window signals are:

- SIW (Speed In Window), sent to the control logic which, in turn, gives PS. The threshold levels are set to equal a speed of approximately 7 cm/sec.

- ETP (Analogue signal SINX in window). Threshold levels indicate a displacement of approximately 15 µm.

- OTP (Analogue signal COSX in window). Threshold levels indicate a displacement of approximately 15 µm.

- $\overline{\text{MNC}}$ (Mechanical on Cylinder). The speed voltage is amplified and applied on a very small window indicating a speed of 1.2 cm/sec. The displacement voltage is applied to a small window indicating 10 µm. (approximately).
  The outputs of both windows are combined in such a way that $\overline{\text{MNC}}$ is active when both speed and displacement are in their windows.

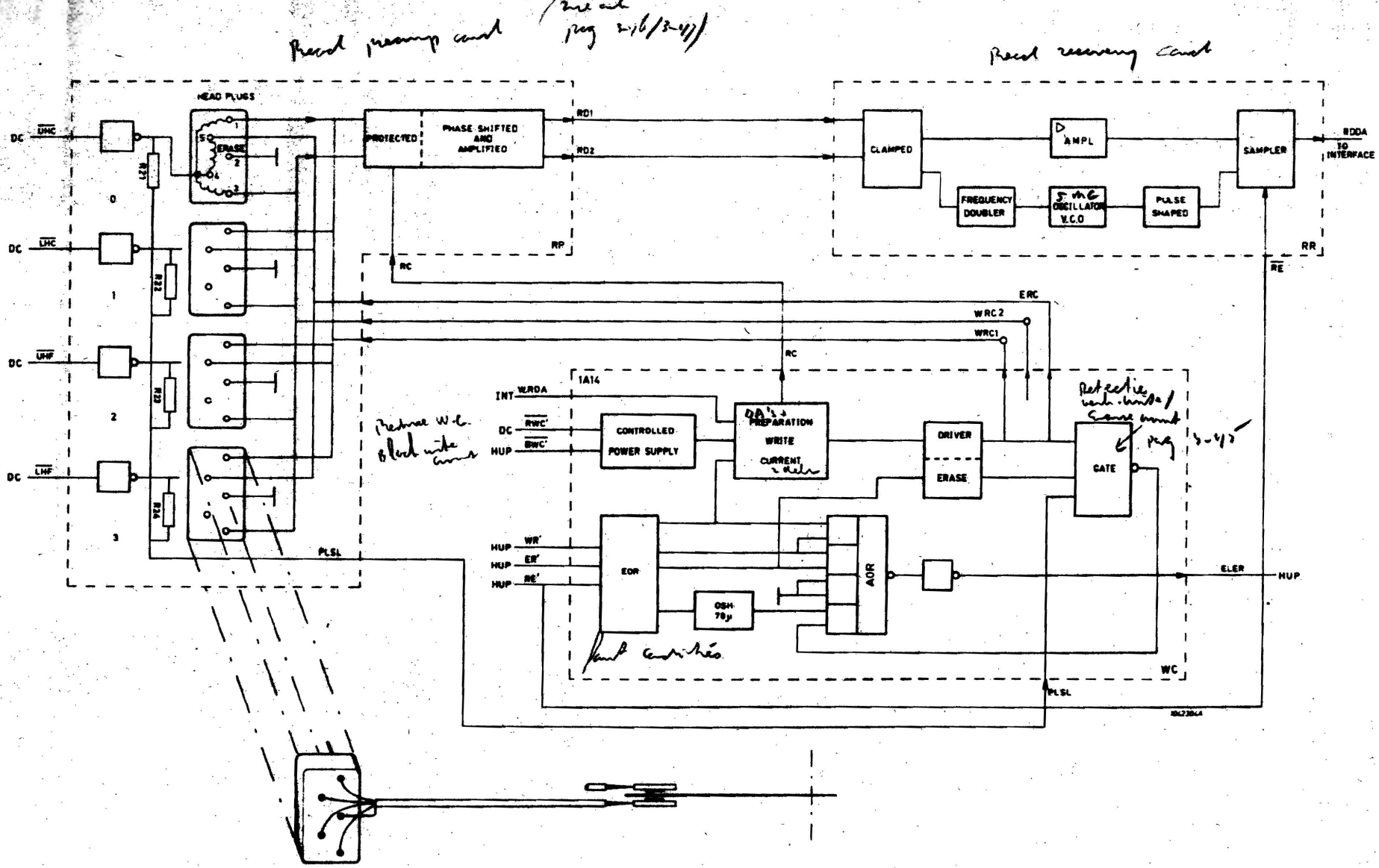

Figure 3-17 READ/WRITE

X1215

7405

6.9 RECORDING PRINCIPLES

The change of the magnetic head from one direction to the other produces the directional field changes on the magnetic disk. The current through the coil will never stay zero while writing is taking place, but is always maximum one way or the other ('non return to zero' principle). A binary 'one' is identified by two pulses in a bit cell period and a binary 'zero' by one pulse during a bit cell period (one magnetic change on the surface). The frequency for recording a 'zero' is 1.25 Mhz. and for a 'one' it is 2.5 Mhz.

6.10 WRITE OPERATION (figures 3-17 and 3-18)

Information can be written on the disk by sending a current through one or the other half of the read/write coil of the selected head. Because of this current the magnetic coating of the disk is magnetised on that particular place in one or the other direction, depending on which half of the head coil the current is flowing in.
The written track is narrowed by an erase gap to prevent track overlap.
Before writing can be initiated one of the heads must be selected.
By activating the interface signals AB0 and CTS, the signal WR (write enable) becomes active. By activating the signals AB4 and CTS, the signal ER (erase enable) becomes active. Because the erase gap is physically behind the read/write gap, there is, for proper operation, some delay between the activating and deactivating of the signals WR and ER.
When the signal WR is active, information can be written on the disk. This information, on the interface line, consists of clock pulses and data pulses, which, in the disk drive unit, are "divided by two". The "divided by two"signal is written on the disk: One logic state of the signal corresponds with the current through one half of the head coil, the other logic state corresponds with the current through the other half of the head coil. See also figure 3-18.
Fig. 3-27 shows a flow diagram of head selection and write operation.

When writing on tracks 128-203, the write current is reduced because of the higher density of flux reversals on the inner tracks. The logic signal RWC (reduce write current) activates this reduction.

6.11 READ OPERATION (Figures 3-17 and 3-18)

The same head coil is used for writing, and reading.
When reading, every reversal of magnetic flux direction induces a voltage in the read/write coil. In the read pre-amplifier a 90° phase-shift of the head signal takes place.In this way zero-crossings of the signal correspond with magnetic flux reversals, and peak detection can be adopted.Before phase-shifting the head signal is

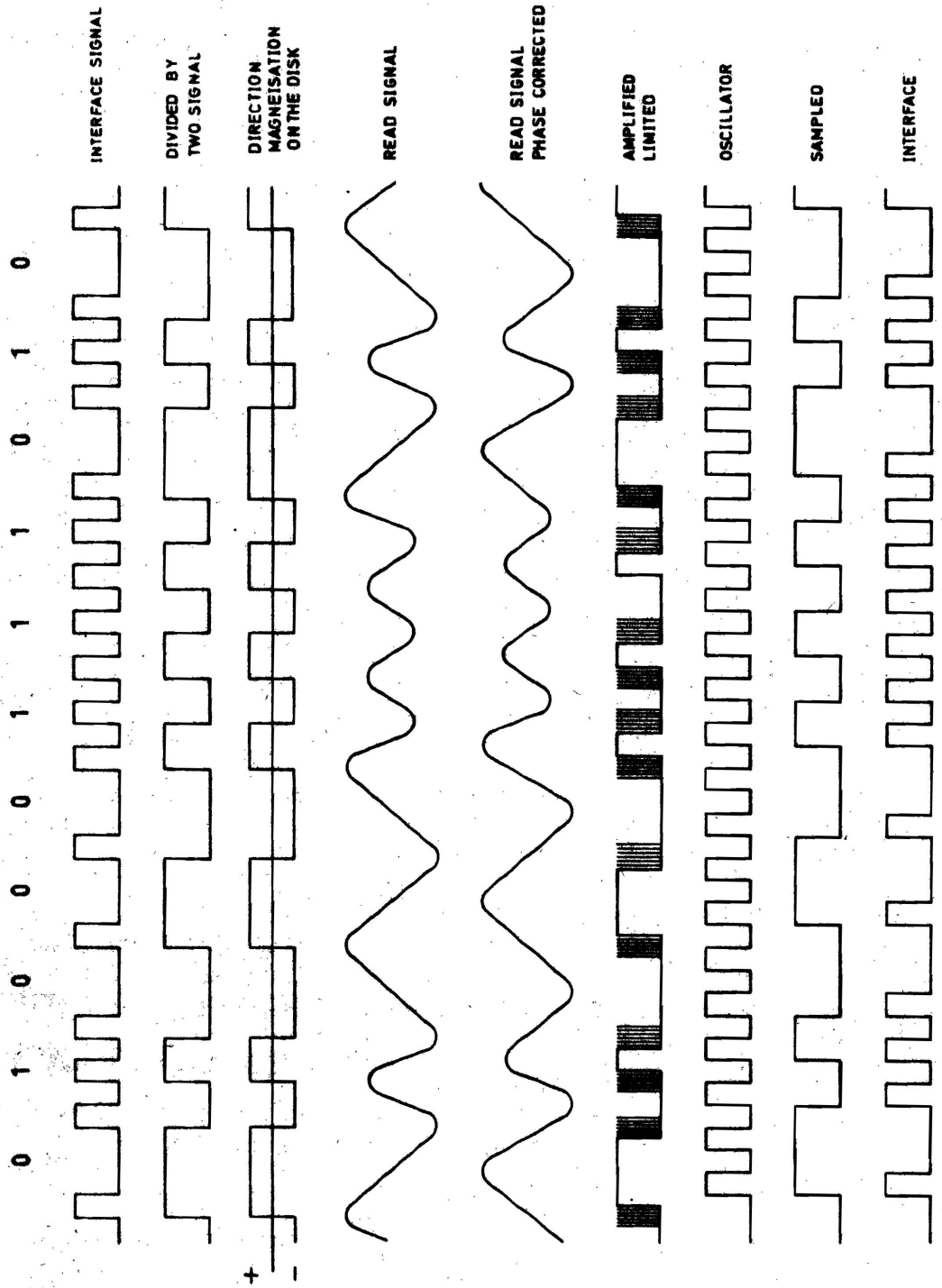

Figure 3-18 WRITING/READING/RECOVERING

amplified (150 x). After phase-shifting the signal is amplified another 100 times. The signal is then sent to the Read Recovery card and limited.
Realising that mechanical actions are involved, a circuit is incorporated to stabilise the jittering pulses received from the head.
An oscillator circuit of twice the highest received frequency (2.5 MHz) is used to sample the incoming pulses in the following way.
The oscillator circuit consists of a frequency doubler, and a resonant circuit tuned for a frequency of approximately 5 MHz. The frequency doubled input pulse, initiates, via a transistor, the resonant circuit. The output of the voltage controlled oscillator circuit is amplified and mixed with the input data signal for sampling.
The sampled data pulse has the frequency of the input signal and the stability of the oscillator circuit used.
A one-shot with a pulse-width of 100 ns, generates a pulse on any data transition for the required interface signal RDDA (Bit Cell configuration).

6.12 READ/WRITE PROTECTION

As the storing of data on the disks is very important checks are incorporated in the read/write electronics to ensure the proper operation of the read/write actions. As soon as a check becomes active, the write channel is blocked.
The write channel is blocked when

a) There is write current and no erase current during more than 60 µ sec.
b) There is erase current and no write current during more than 60 µ sec.
c) More than one head is selected.
d) Read and write enable or erase enable at the same time.
e) Alternating write current in only one half of a head coil.
f) Read enable, write enable or erase when the positioner is moving.

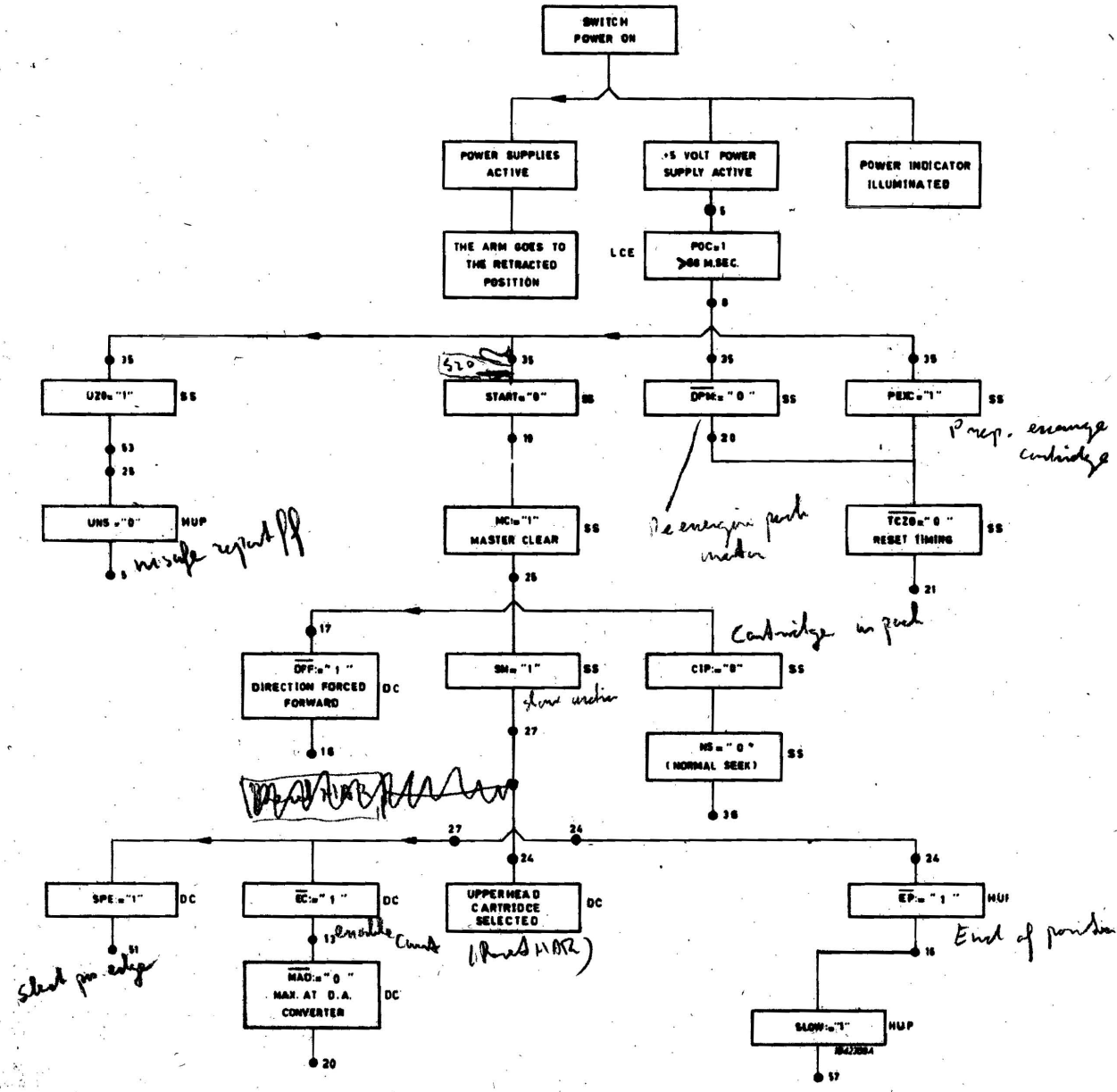

Figure 3-19 POWER ON

The following paragraphs describe in detail the logic operation of each of the functional elements. The descriptions are generally divided into different parts, reflecting the primary functions. The functional diagrams in Volume IV should be used in conjunction with this section.

7.1 POWER ON (Figure 3-19)

By switching the Power button at the rear of the disk-unit, the power-indicator will light, the positioner goes to the retracted position and the power supply becomes active.
When the power supply is active, the signal POC (Power On Clear) is "1" for more than 60 ms. This signal resets the flip-flops UNS (Unsafe), EPM (Energise Pack Motor) and Start. The relay which connects the electronic brake to the main drive motor is energised as well as the lock magnet which holds one of the clamps and the positioner block magnet. The signal POC sets the flip-flop PEXC (Preparation Exchange of the Cartridge).
POC resets the flip-flop UNS (Unsafe report flip-flop) by way of UZO and the flip-flop START by way of SZO and produces the signal MC (Master Clear) which has the function of clearing the unit. It resets the flip-flop DFF (Direction of Force Forward)and the flip-flop CIP (Cartridge In Pack) which resets the flip-flop NS (Normal Seek). The signal MC sets the flip-flop SM (Slow Motion) and the SPE (Select Positive Edge) becomes a '1'. Also, the flip-flop EC (Enable Count) is reset and the signal $\overline{\text{MAD}}$ (Maximum at DA converter) becomes a '0'.
The flip-flop EP (End of Position) is reset by the signal SM which sets the signal SLOW to a "1".
The Head Selection register flip-flops HO and H1 are reset by signal SM, which means that the upper head of the cartridge is selected.

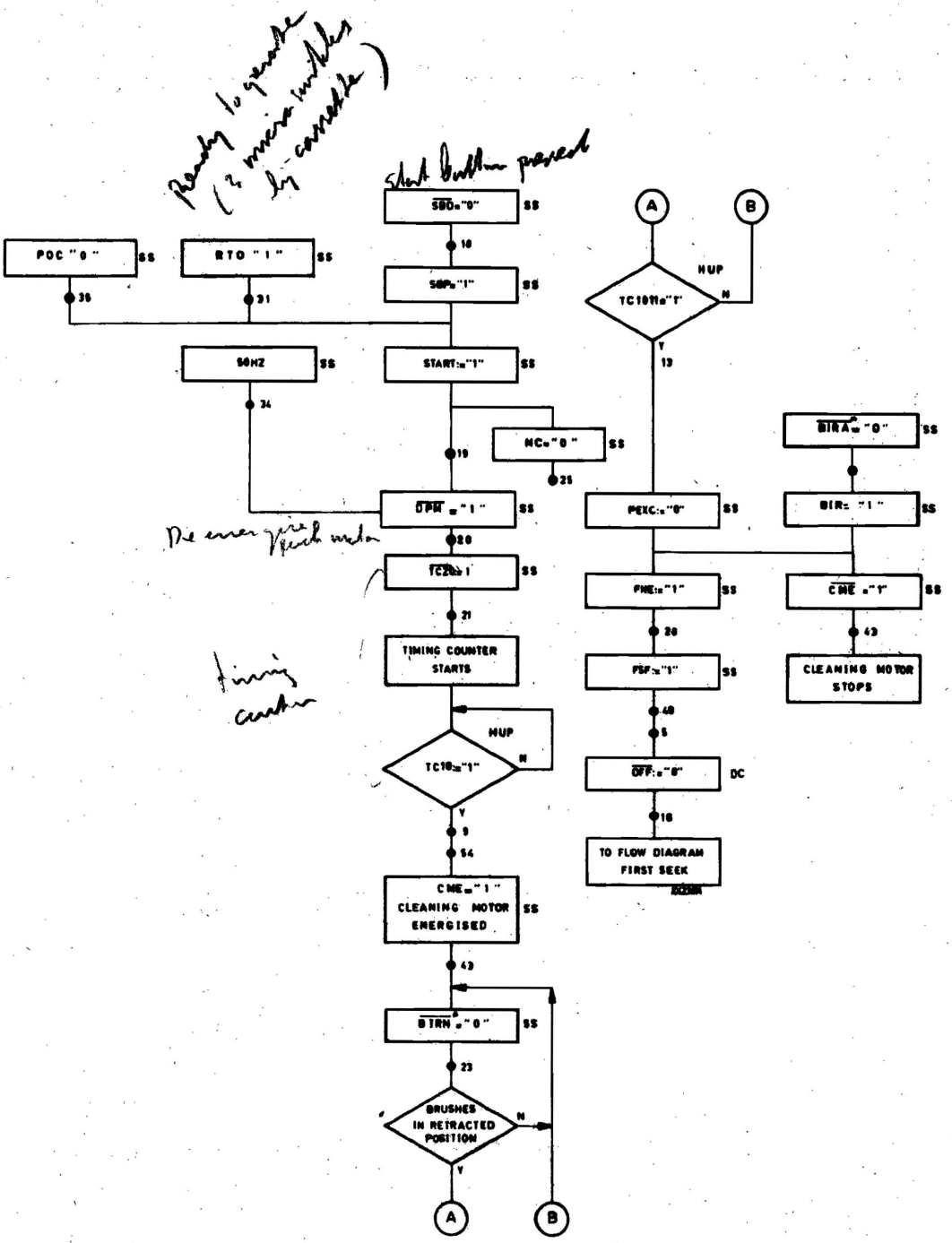

Figure 3-20 START

7.2 START (Figure 3-20)

Three micro-switches ensure that the X1215 cannot be started when a cartridge is not present or when the cartridge loading sequence has been incorrectly implemented. One micro-switch is used to check that the cartridge is fully seated in its holder, and the other two are used to check that the two clamps are closed.
They are all connected in parallel to, effectively, form an OR gate. The logic checks that these three switches are all closed before permitting the X1215 to be started.
When one or more of these switches are open, the signal RTO (Ready To Operate) is not produced and the flip-flops Start and Unsafe cannot be set.
When the cartridge is correctly loaded, all the micro-switches are closed and signal RTO is active to remove the block on the start circuit.
By operation of the Start/Stop button on the Operators' panel, the signal SBP (Start/Stop Button Pressed) becomes a '1'. The flip-flop START is set and removes the signal MC (Master Clear).
A 50 Hz signal (clock) and the signal START reset the flip-flop DPM (De-Energise Pack Motor) to start the pack motor. The signal TCZO is removed to allow the Timing Counter (TC) to function.
The Timing Counter is stepped by each clock pulse input. The counter starts with TC0 and steps through TC10.
When the Timing Counter reaches stage 10 (TC10 is a '1'), the flip-flop CME (Cleaning Motor Energised) is set which will start the brush motor. The brushes go inside the pack and open a micro-switch which is connected on the brush arm. The signal BIRN (Cleaning Brush In Retracted Not Active) becomes a '0'. While the Timing Counter is being stepped to stage 11 (TC1011 is a '1'), the brushes move in and out of the pack in a cleaning action several times. Each cleaning action operates the micro-switch, effecting signal BIRN. When TC1011 is a '1' the flip-flop PEXC (Preparation Exchange of Cartridge) is reset. Some time later the signal BIR (Brushes In the Retracted position) becomes a "1". $\overline{\text{PEXC}}$ and BIR both being a "1" removes signal CME which stops the brush motor. $\overline{\text{PEXC}}$ also sets flip-flop FNE producing FSF (First Seek Forwards) and activating the positioner by inhibiting the signal RET. The signal FSF sets the flip-flop DFF (Direction Forced Forwards).

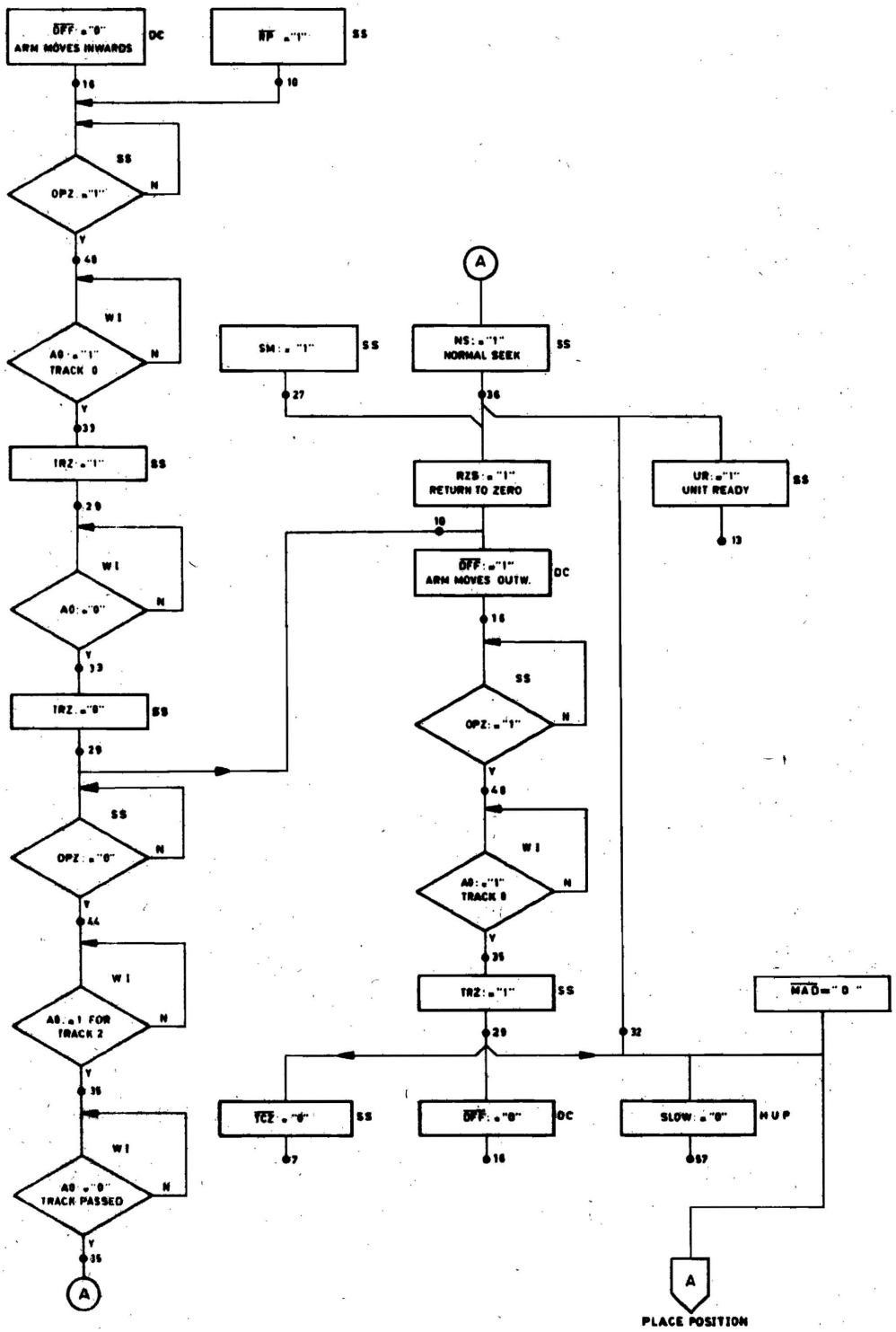

Figure 3-21 FIRST SEEK

7.3 FIRST SEEK (Figure 3-21)

At the end of the start procedure, the flip-flop DFF (Direction Forced Forward) is set and the positioner moves towards the disks. When the heads reach the vicinity of track zero, the signal OPZ (Optical Zero) becomes a '1'. When the heads are positioned over track zero, the signal AO (Area Around Even Track) becomes a '1' and the signal TRZ (Track Zero) is a '1'. The heads continue to move and the signal AO becomes a '0', making signal TRZ a '0'. The signal OPZ becomes a '0' because the heads have moved away from track zero. When the heads reach track $1\frac{1}{2}$, the signal AO becomes a '1' and when track $2\frac{1}{2}$ is passed, the signal becomes a '0'. With signals AO and OPZ both '0' the signal NS (Normal Seek) becomes a '1'. The signal SM (Slow Motion), which is still a '1' (see Power-on), and signal NS produce signal RZS (Return to Zero Seek) which resets the flip-flop DFF. The heads start moving in the opposite direction and the signal OPZ becomes a '1' again. Also, signal AO becomes a '1' when the heads reach track $\frac{1}{2}$ and makes signal TRZ a '1'. Because the signal NS is still a '1' and the signal TCZ (Track Centre Zero) is a '1', the flip-flop DFF is set again and the signal SLOW becomes a '0'. The signal SLOW gives the signal MAD the opportunity to become active. The rest of the seek is discussed in the Position Mode description in this volume.

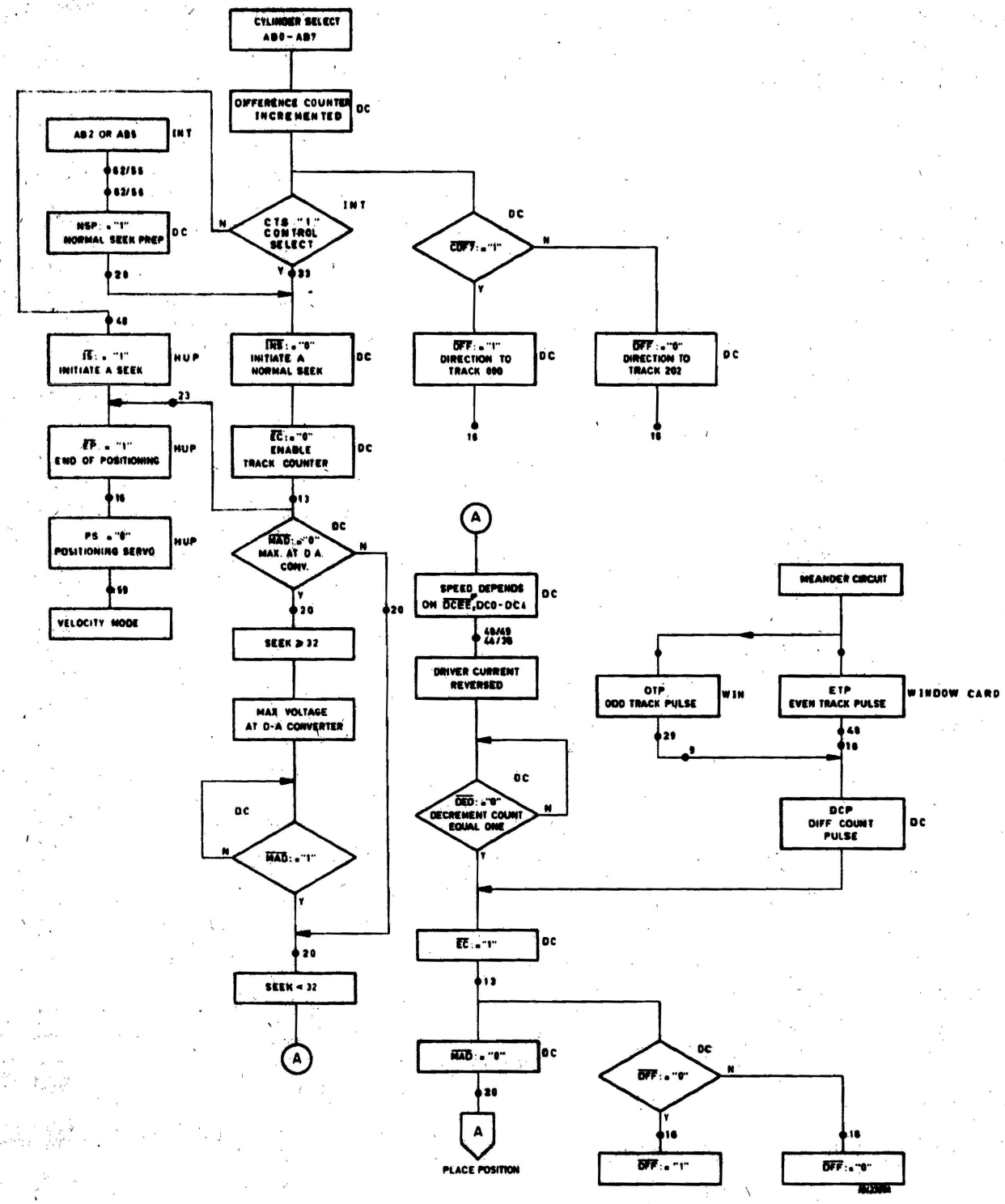

Figure 3-22 NORMAL SEEK

7.4 NORMAL SEEK (Figure 3-22)

The interface signals AB0 through AB7 fill a counter with the contents of the new address. This address is compared with the old address which is present in a second counter. The output of an adder indicates the number of tracks that the positioner has to move. When the number is positive, the flip-flop DFF (Direction Forced Forward) is set and the heads will move inside the pack. When the number is negative, the flip-flop DFF is reset and the movement is in the opposite direction. The number of tracks required to be moved by the positioner is placed in a synchronous up/down counter.

When the positioner starts moving, the counter receives a DCP (Decrement Pulse) pulse from the meander (see Meander sections) each time the positioner moves over a track. When the counter has received the same number of pulses as the contents of the counter, then the output of the counter, signal DEO (Decrement Counter equal one) is produced. This indicates that the positioner is within half a track distance of the required track.

The movement of the positioner is initiated by the interface signal AB2 or AB5 (depending on the Control Unit), together with the signal CTS (Control Select Command). This signal AB2 or AB5 makes signal NSP a '1' (Normal Seek Preparation). The leading edge of signal CTS produces signal IS (Initiate a Seek) to reset flip-flop EP (End of Position). The signal PS becomes a '0' (Positioning Servo)which indicates that the positioner is now in the Velocity mode. Also, during the CTS pulse, the signal INS (Initiate a Normal Seek) becomes a '1' and this will set the flip-flop EC (Enable Count). The signal $\overline{\text{MAD}}$ (Maximum at DA converter) is either a '0' or a '1', depending on the output of the synchronous up/down counter. When the output of the counter is less than 32 (the positioner has to move less than 32 tracks), the signal $\overline{\text{MAD}}$ is a '1'. When the output of the counter is equal or greater than 32, the signal $\overline{\text{MAD}}$ is a '0'.

While $\overline{\text{MAD}}$ is "0" the positioner accelerates or moves at maximum speed. The moment that signal $\overline{\text{MAD}}$ becomes '1', the speed reduces and is dependent on the signals DC0 through DC4 (the 5 least significant bits of the outputs of the up/down counter), together with signal $\overline{\text{DCEE}}$.

When the positioner has arrived at the selected track, the outputs of the counter make signal DEO a '1' and, on the leading edge of the last DCP pulse, the flip-flop EC is reset. The signal EC either sets or resets the flip-flop DFF which depends on the state of the flip-flop DFF when triggered. The signal $\overline{\text{MAD}}$ becomes a '0'.

The rest of the seek is described in the Position Mode section in this volume.

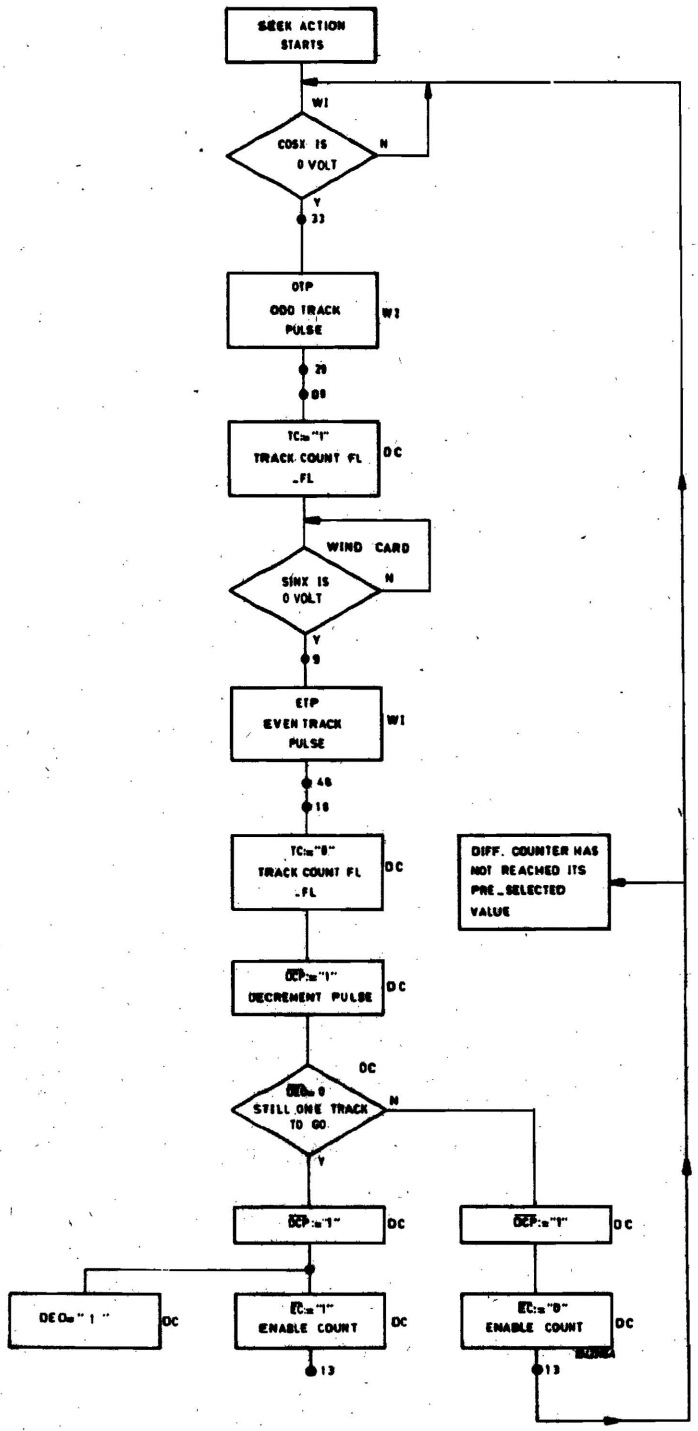

Figure 3-23 TRACK COUNT OPERATION

7.5 TRACK COUNT OPERATION (Figure 3-23)

When the positioner moves over the tracks the meander produces two signals, COSX and SINX. The signal COSX produces the signals OTP (Odd Track Pulse) and AO (Area around even track). The signal SINX produces the signal ETP (Even Track Pulse) and A12. The flip-flop TC produces a DCP (Decrement Pulse). These DCP pulses decrement the count in the up/down counter each time the pulse is raised.
Providing the positioner has not reached the selected track the up/down counter receives a DCP pulse for every track. Also, the output signal DEO (Difference counter Equals One) is a "0" and the flip-flop EC (Enable Count) stays set. The moment the positioner reaches the selected track the signal DEO becomes a "1" and, on the leading edge of the DCP pulse, flip-flop EC is reset. The flip-flop EP (End of Position) is set and the signal PS (Position Servo) becomes a "1".

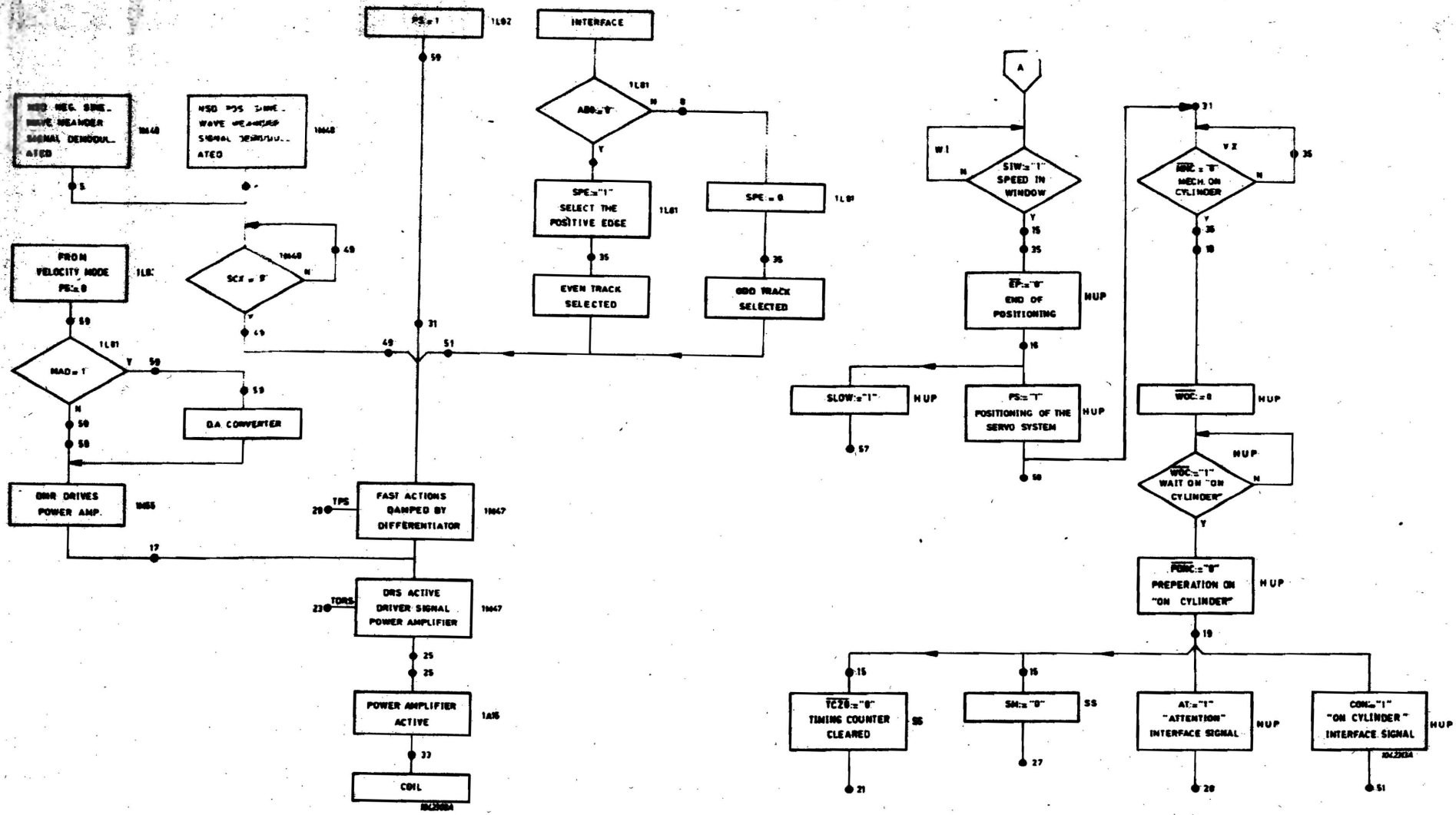

Fig. 3-24 Positioning and Place Positioning Mode.

7.6 PLACE POSITIONING (Figure 3-24)

Due to the signal $\overline{\text{MAD}}$ (Maximum At DA Converter) being active for a short duration, the speed of the arm will decrease and when the speed decreases sufficiently, it comes within a pre-selected value (window); a tachometer monitors the speed. The output of the tachometer WSIW (Window Speed In Window) produces signal SIW (Speed In Window). When the speed is at the pre-selected value, signal SIW becomes logical '1' and sets the flip-flop EP (End of Positioning). The signals SLOW and PS (Place Positioning Servo) becomes a '1' to change the control from Velocity Mode to Positioning Mode.
Another window signal MNC (Mechanical on Cylinder), together with signal EP are used to produce the signal WOC.
The one-shot WOC (Wait on On Cylinder) is used to delay (because of mechanical transients) the control circuit which indicates that the head has arrived at the selected cylinder.
When the delay has expired, the signal PONC (Preparation On Cylinder) becomes a '1' and signals CON and AT (Attention) becomes a '1'. Also, signal TCZO (Reset Timing Counter) becomes a '0' and SM (Slow Motion) is reset.

7.7 POSITIONING MODE (Figure 3-24)

Depending on the least significant bit of the address bus lines (AB0) selection of an even or odd track is realised. Signal SPE (Selection of a Positive Edge) determines whether the positive-going or negative-going edge of the received sine-wave signal is used. If the signal SPE is a logical "1" no inversion of the sine-wave signal is needed.
The sum of position signal (SINX) and differentiated position signal is supplied to an electronic switch circuit. One switch is open when signal PS (Positioning Servo system) is a logic "1" (Positioning Mode). If the switch is closed (PS = "0") the other is opened (Velocity Mode) and the signal DMR (Difference between Momentary and Required speed) controls the positioning of the heads. Both switches (selection of velocity mode or positioning mode) are connected together and the output provides the input to an operational amplifier.
The output of this amplifier is the signal DRS (Driver Signal) which activates the power amplifier to send a proportional current through the positioning coil.
For more detailed information about the differentiator, electronic switch and operational amplifier refer to Volume 5.

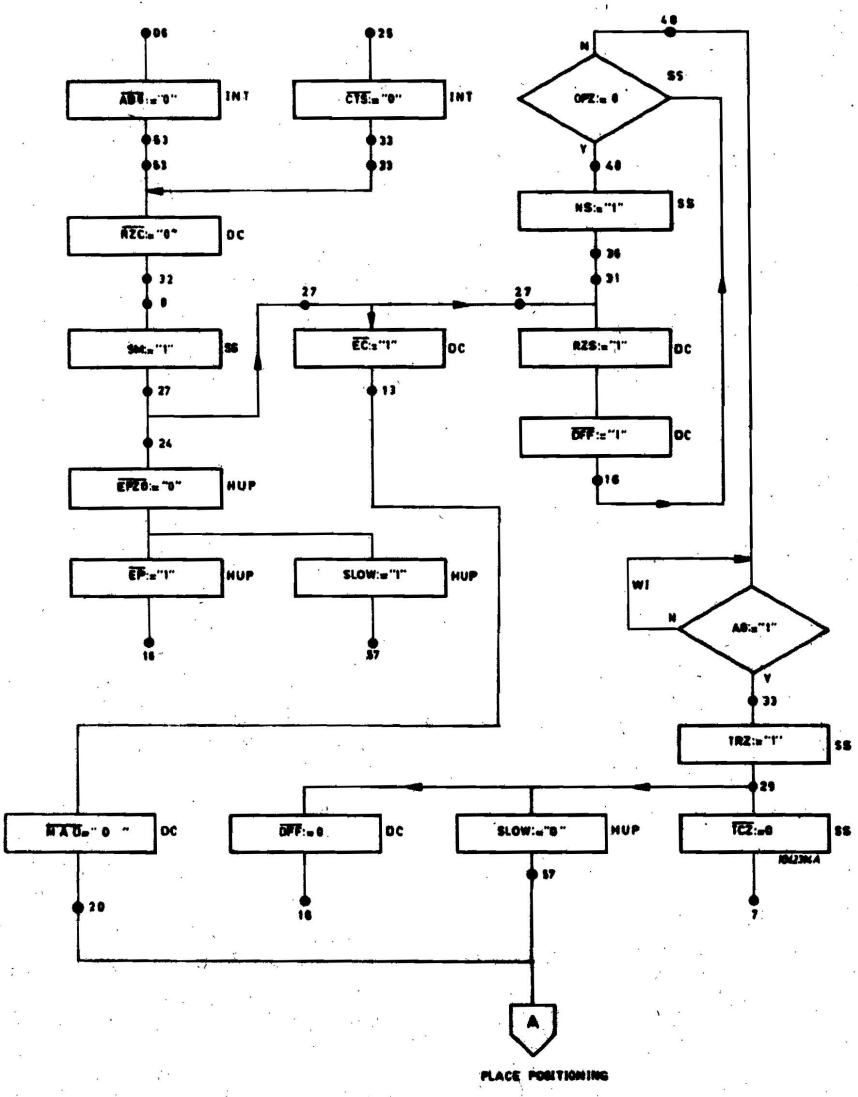

Figure 3-25 RETURN TO ZERO SEEK

7.8 RETURN TO ZERO SEEK (Figure 3-25)

Upon receipt of the interface signals CTS (Control Select) and AB6 (Return to Zero Seek) the signal $\overline{RZC}$ (Return to Zero Command) becomes a "0" to set the flip-flop SM (Slow Motion). The signal NS (Normal Seek) is a "1". The signal RZS (Return to Zero Seek) becomes a "1" due to the signals NS and SM. The signal RZS and signal SR (Slow Reverse to track zero), a result of the signal TRZ (Track Zero), being logical "0" reset the flip-flop DFF (direction of Force Forward) and the direction of movement of the positioner is reverse.
Also the signal MAD becomes a "1" when signal EC (Enable Count) becomes a "0". If, after some time, optical zero is detected and later signal A0 is produced; then the signal TRZ becomes a "1". The signal TRZ together with the signal RZS produces the signal DFFZ1 to set the flip-flop DFF.
The signals NS and TRZ produce signal REPS (Reset End of Position flip-flop during a Slow Seek).
The signals REPS and SM produce signal $\overline{EPZO}$ (End of Position Reset Signal) to reset flip-flop EP. Together signal $\overline{EPZO}$ and the reset output of flip-flop EP set signal SLOW to a logical "0".
The rest of this seek is described in the Place Positioning Mode, see section 7.6 of this volume.

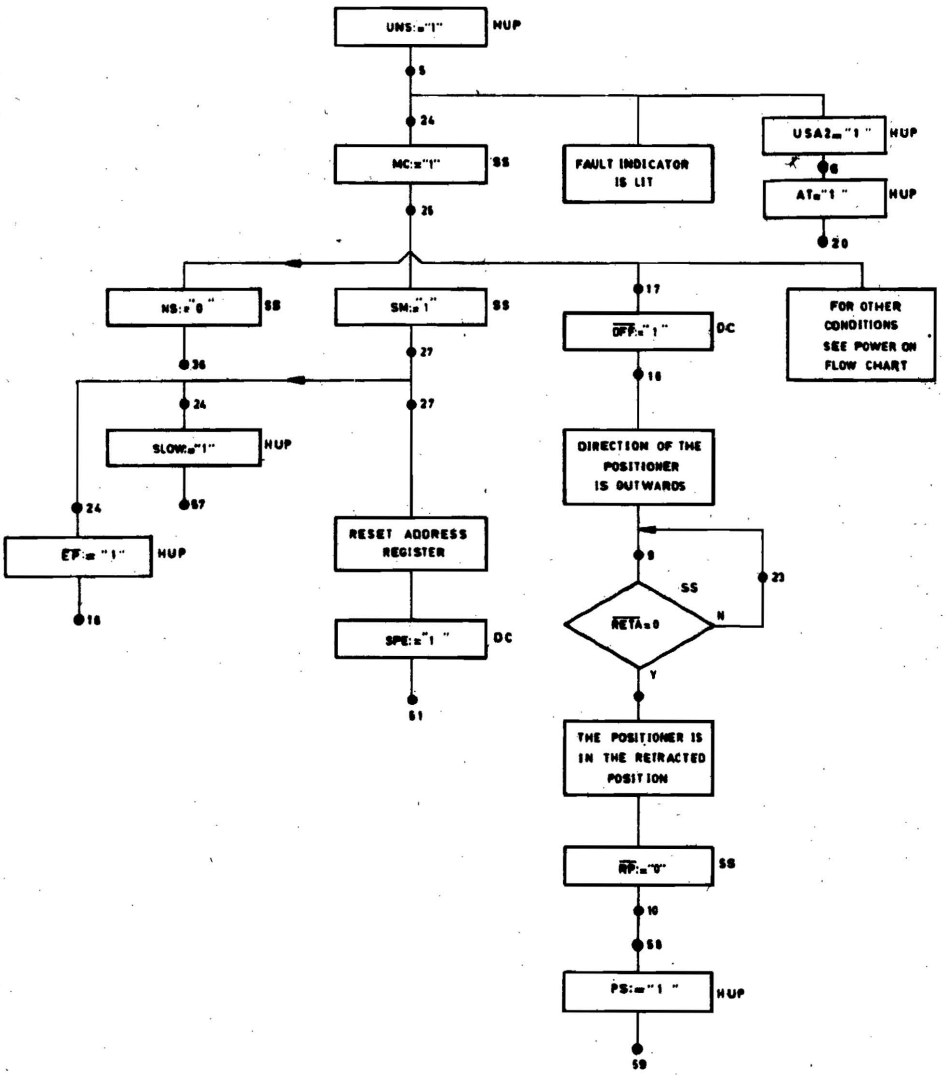

Figure 3-26 GO TO RETRACTED POSITION SEEK (UNSAFE 2)

7.9 GO TO RETRACTED POSITION SEEK (Figure 3-26)

If 'unit unsafe 2' is made active, a fault condition is signalled (see Table 5.3.6 of this volume). The fault indicator on the Operator's panel is lit, and the master clear signal MC is produced with the following results:

a) The D-type flip-flop CIP (Carriage In Pack) is reset which resets the flip-flop NS (Normal Seek).

b) The output of the NAND-gate SM becomes a '1' with the result that signal EPZO is produced to reset flip-flop EP (End of Position). Signal EPZD, the inverted value of the reset output of flip-flop EP, resets the Cylinder register, resulting in emptying the Address register. This can be checked by measuring signal SPE (='1'), the inverted value of bit zero.

c) Another result of the master clear signal is that the flip-flop DFF is reset. The reset output moves the positioner outwards. When the arm has reached the retracted position , the micro-switch is operated and signal RETA is produced. The output of the retracted position flip-flop RET, in the first instance, produces signal RP (Retracted Position) which results in signal PS being produced. Signal RP also blocks the input to the power amplifier. The unit unsafe signal UNS, produces the interface signal USA2 (Unit Unsafe 2) and the interface signal AT (Attention).

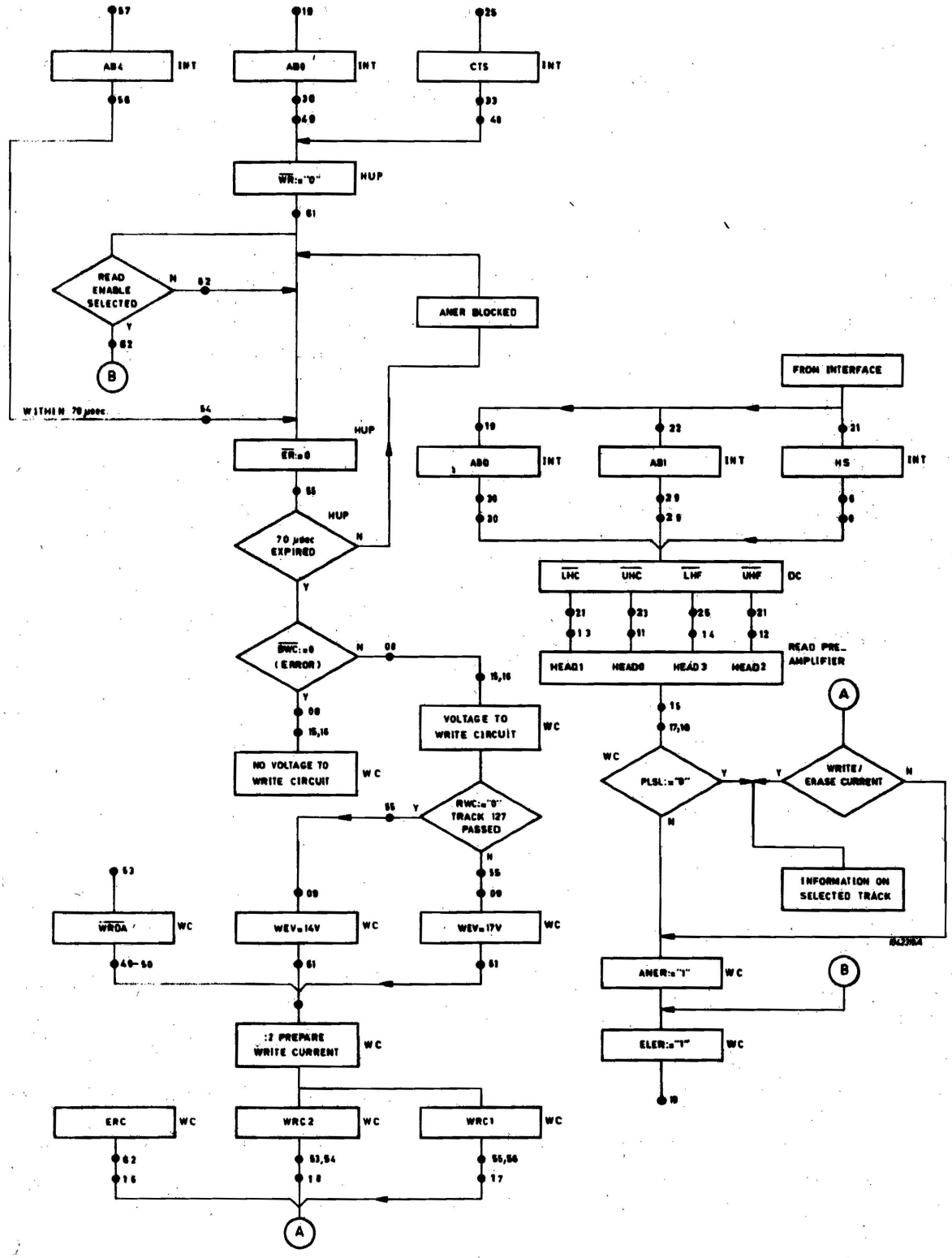

Figure 3-27 WRITE HEAD SELECTION

7.10 WRITING (Figure 3-27)

Before writing can be initiated, one of the heads must be selected (signals HS, AB0 and AB1, see figure 3-27).
The interface lines CTS (Control Select), AB0 (Write Enable) and AB4 (Erase Enable) are preparation signals for signals WR (Write Enable) and ER (Erase Enable). From the Control Unit the selection signals are received (erase enable signal must come within 70 µs after the write enable signal). During this time of 70 µs, signal ANER (Analogue Error) is blocked so that the unit does not react. The time lapse is necessary because of the time relationship between the write and erase gaps at full disk speed (erase head situated 'behind' the read/write head). If the read enable signal is present during the writing an electronic error is raised (signal ELER). If no fault is detected, signals UNS (Unit Unsafe) and RER (Recoverable Error) are not active, and signal BWC (Block Write Current) is not produced so that a voltage is supplied to the write circuit. The current through the read/write head is controlled because when the bit density of the track becomes greater, from cylinder 127 onwards to cylinder 203, the write current must reduce. This is done by the signal RWC (Reduce Write Current) reducing the supply voltage from 17 Volts to 14 Volts.
Operation of the write circuit is now possible and the data to be written on the track (serial information) is received. A 'divide by two' circuit produces edges from the bit cell pulses so that magnetisation changes are written on the track.
Two checks are incorporated. The first check determines the co-existance of the write and erase current (the erase and the write currents are 55 mA and 85 mA respectively from cylinder 000 to cylinder 128, and 45 mA and 67 mA respectively from cylinder 128 to the final cylinder). The other checks the selection of more than one head.
If more than one head is selected, the signal PLSL (Plural Selection) is set, activating signal ANER (Analogue Error).
If the checks are found to be correct (signal ANER is not raised so that signal ELER stays logical '0'), the information is written to the track.

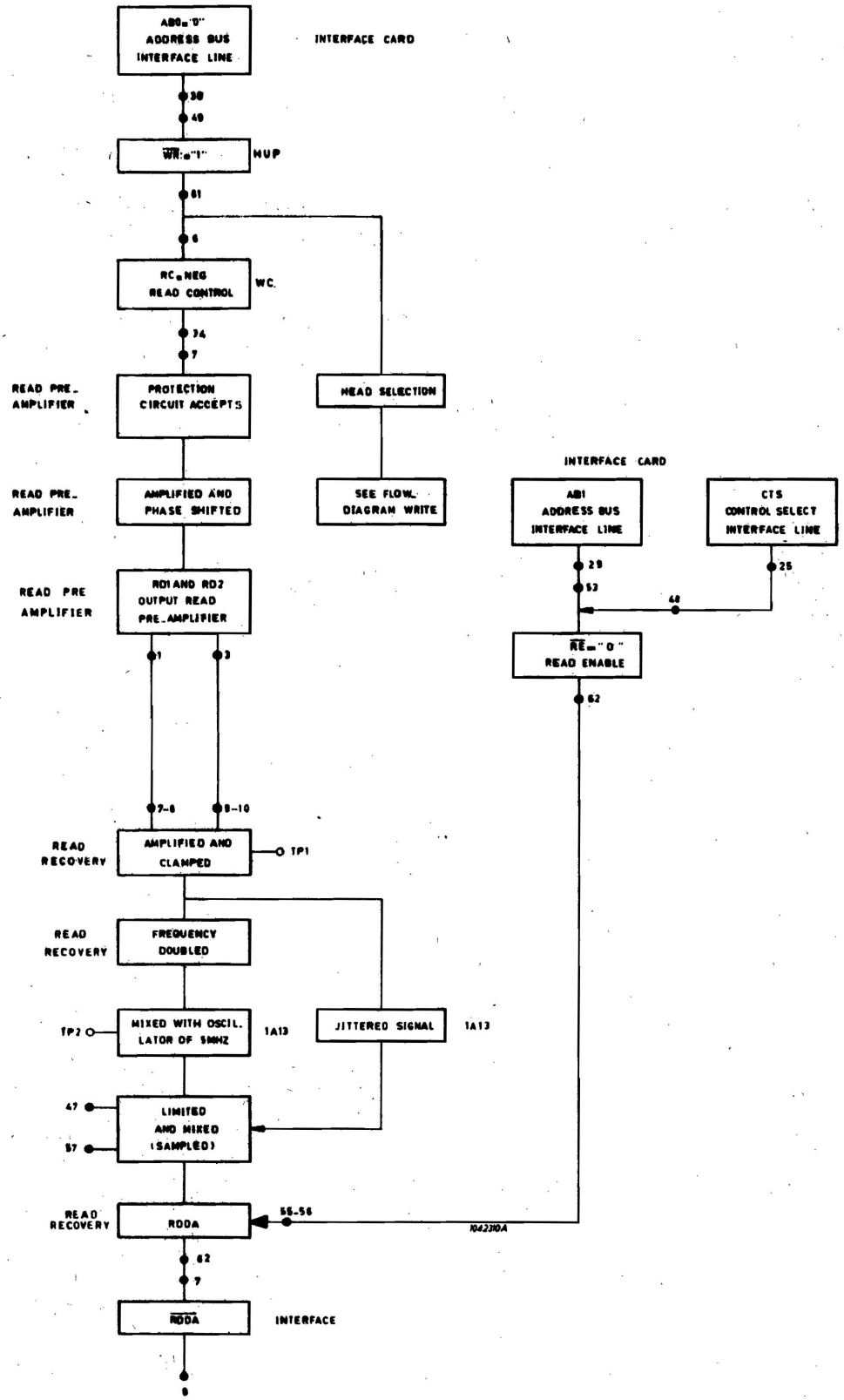

Figure 3-28 READ

7.11 READING (Figure 3-28)

When reading, signals CTS (Control Select) together with AB1 (Read Enable) are required (RE = '0'). If signal AB0 (Write Enable) or AB4 (Erase Enable) is also present, a fault condition occurs.
If the write enable signal WR is not present, the read circuit is allowed to be operative by activating the signal RC (Read Control).
The protection circuit, using a diode-resistor network situated on the Read Pre-Amplifier card, will conduct.
Before reading is initiated, the head is selected by the signal HS (Head Select), together with the signals AB0 and AB1. The read signal from the head is amplified (200 X), phase-shifted, then amplified (100 X) again. The signal is then sent to the Read Recovery Card where it is amplified to such an extent that the peaks are flattened.
Realising that mechanical actions are involved, a circuit is incorporated to stabilise the jittering pulses received from the head.
An oscillator circuit of double the highest received frequency (2.5 MHz) is used to sample the incoming pulses in the following way.
The oscillator circuit consists of a frequency doubler, a one-shot and a resonant circuit tuned for a frequency of approximately 5 MHz. The one-shot, shaping the frequency doubled input pulse, initiates, via a transistor, the resonant circuit. Each time the one-shot produces a pulse, the resonant circuit is triggered. The output of the oscillator circuit is amplified and mixed with the input signal; this is called sampling. The sampled pulse has the frequency of the input signal and the stability of the oscillator circuit used.
A one-shot with a pulse-width of 100 ns, together with a frequency doubler are used to produce the required interface signal RDDA (Bit Cell configuration).

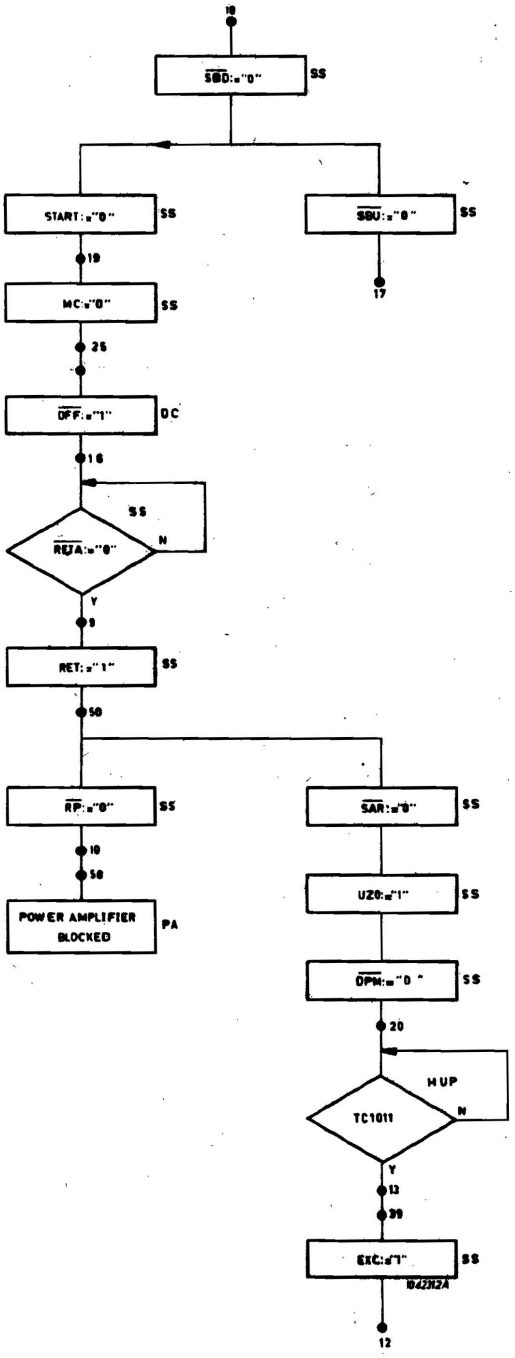

Figure 3-29 STOP

7.12 STOP (figure 3-29)

To stop the unit, the Start/Stop button must be pressed. This action results in the resetting of the Start flip-flop on the leading edge of signal SBP.
The signal MC (Master Clear) becoming a logical '1', resets the flip-flop DFF.
The positioner arm moves outwards, passing optical zero, until it reaches the retracted position. The micro-switch sets the retracted flip-flop RET and two actions now take place.
The first action results in signal SAR being produced to raise signal UZO. The pack motor flip-flop EPM will be reset if the 50 Hz pulse is present, resulting in DPM = '0'. The drive motor will then stop. If now TC1011 becomes a logical '1' the PEXC flip-flop (Preparation Exchange Cartridge) will be set, and now the cartridge can be exchanged.
The second action results in the retracted position signal RP being raised so that the Power Amplifier input is blocked keeping the arm in the retracted position.

8.1 POWER SUPPLY (figure 4-16)

The mains voltage, which is normally 220 VAC, single phase, is connected with a transformer in the disk drive unit via a mains filter, a switch and a fuse.
The switch and the fuse are situated on the rear of the disk unit, the transformer is situated below the base plate in the rear of the disk unit.
The drive motor for the spindle and the motor for the cleaning mechanism are connected to the primary side of the transformer.
The transformer has been designed in such a way that, when a different mains voltage is required, the disk unit can be easily adapted to this voltage, by changing one connection on the primary side of the transformer.
A temperature safety has been built into the transformer.
The secondary side of the transformer delivers six voltages.

a) One voltage is used to make a DC voltage of + 24 V.
b) One voltage is used to make a DC voltage of + 12 V.
c) One voltage is used to make a DC voltage of + 5 V.
d) One voltage is used to make a DC voltage of - 12 V.

The voltages mentioned in a till d are stabilized. The stabilisation is done on a power supply card which is attached to the rear of the disk drive unit. The necessary series transistors are mounted on heatsinks which are mounted on the rear of the unit.

e) One voltage is used to feed the stabilisation circuit of the + 5 Volts supply.
f) The last voltage delivers after rectifying and smoothing a + 35 Volts voltage. These voltages are not stabilized and are fed from a winding with a centre tap.

Finally, on the primary side of the transformer, there is a voltage which, after rectifying, is used to brake the drive motor for the spindle electrically.

8-2 POWER SUPPLY CARD (figure 4-15)

The power supply card carries the following circuits:
a) A +5 Volts supply (protected by a 4A. fuse)
b) A +24 Volts circuit (protected by a 1.2A fuse)
c) A +12 Volts circuit (protected by a 1A fuse)
d) A -12 Volts circuit (protected by a 1A fuse)

Each circuit is basically the same, comprising a voltage regulator, transistor controlled by an integrated circuit.

Fluctuations of the output voltage are sensed, amplified and then fed to the voltage regulator transistor.
If the output voltage becomes too low the value of the internal resistor of the regulator transistor decreases.
If the voltage increases the value of the internal resistor of the regulator transistor increases.
The voltage drop across the transistor alters accordingly, regulating the output voltage.
The +5 Volts supply employs a thyristor protection circuit. If the voltage becomes too high the output voltage is short circuited to earth.

X 1215
Cartridge Disk Drive Unit
Vol. IV: Diagrams



Data Systems

1. KEY TO DIAGRAMS.

1-1 GENERAL

The key to logic refers to the logic circuits on the printed circuit boards (figure 4-1). The voltage levels used in the CDD are +5V for a logic "1" and 0V for a logic "0".
Each printed circuit board has a 64 pin female connector on which pin 2 is used for +5V and pins 4, 14, 26, 40, 52 and 64 are used for logical earth. The logic used in the CDD is generally called TTL (Transistor - Transistor Logic) consisting of integrated circuits. These integrated circuits are contained in "dual in line" packages with 14 pin or 16 pin connections (figure 4-1A). Discrete component circuits containing separate resistors, capacitors, transistors or diodes are also sometimes used.
Figure 4-1B shows the organisation of component location on the printed circuit boards.

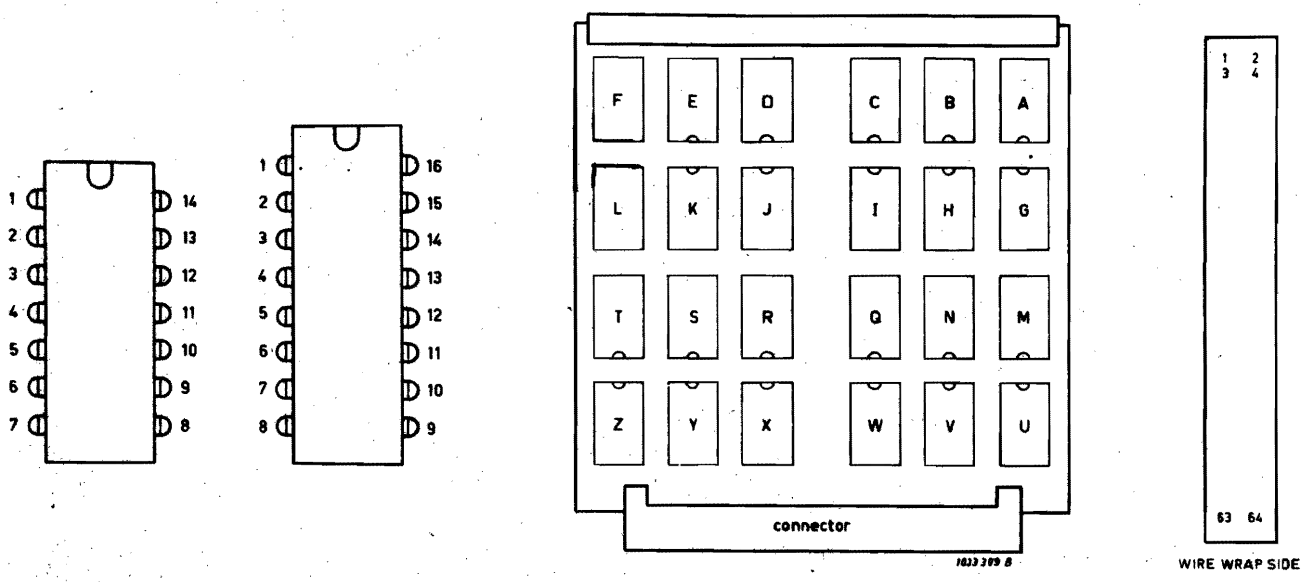

A B

Figure 4-1

1-2 LOGIC SYMBOLS

Function name : A00
Code number : 9330 500 71XX0
Supplier type : FJH131; 7400; 9N00
Drawing symbol :

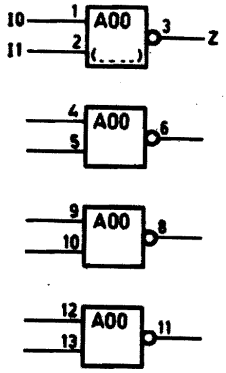

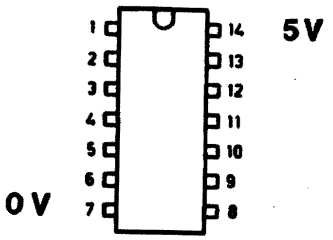

Description :

The A00 comprises four, independent NAND-gates, each provided with two inputs and a totem pole output stage.

Logic function:

$Z = \overline{I0.I1}$

Function name : A03
Code number : 9331 935 30XX0
Supplier type : 74132
Drawing symbol :

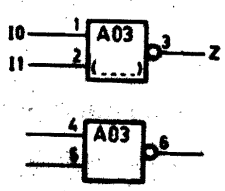

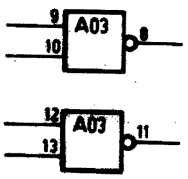

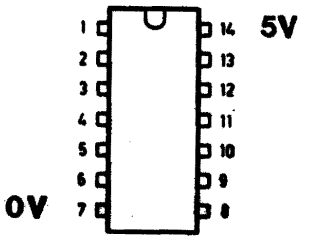

Description :

The A03 comprises four,independent NAND-gates, each provided with two inputs Schmitt trigger and a totem pole output stage.

Logic function :

$Z = \overline{I_0 \cdot I_1}$

Function name : A04

Code number : 9330 500 31XX0

Supplier type : FJH121 ; 7410 ; 9N10

Drawing symbol :

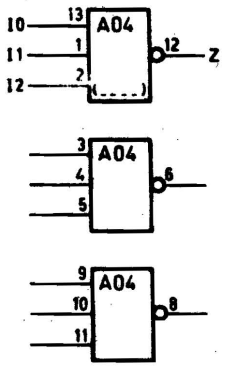

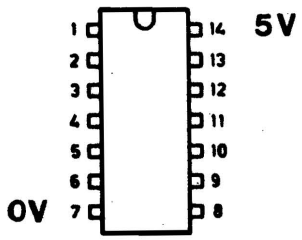

Description :

The A04 comprises three,independent NAND-gates, each provided with three inputs and a totem pole output stage.

Logic function :

$Z = \overline{I_0 \cdot I_1 \cdot I_2}$

Function name : A06

Code number : 9330 499 91XX0

Supplier type : FJH111; 7420; 9N20

Drawing symbol :

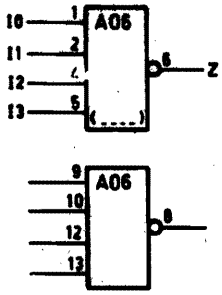

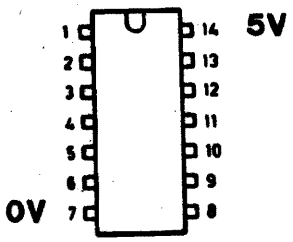

Description :

The A06 comprises two independent NAND-gates, each provided with four inputs and a totem pole output stage.

Logic function :

$$Z = \overline{I_0 . I_1 . I_2 . I_3}$$

Function name	:	A08
Code number	:	9330 499 51XX0
Supplier type	:	FJH101 ; 7430 ; 9N30
Drawing symbol	:	

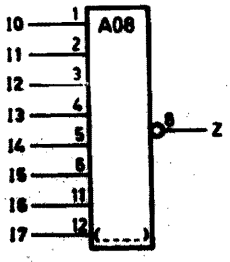

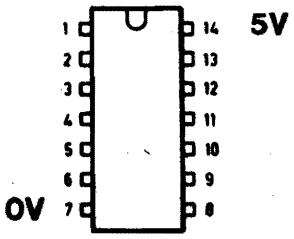

Description :

The A08 comprises one NAND-gate, with eight inputs and a totem pole output stage.

Logic function :

$$Z = \overline{I_0 . I_1 . I_2 . I_3 . I_4 . I_5 . I_6 . I_7}$$

Function name : A11

Code number : 9331 719 20XX0

Supplier type : 7438 ; 9N38

Drawing symbol :

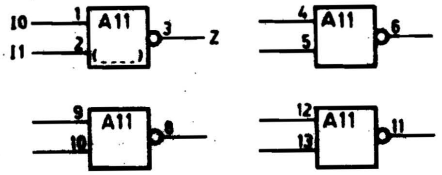

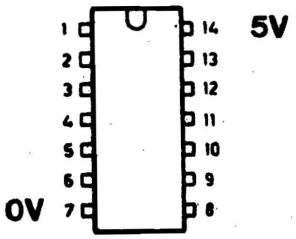

Description :

The A11 comprises four, independent NAND-gates, each provided with two inputs and an open collector output stage.

Logic function :

$Z = \overline{I_0 \cdot I_1}$

Function name : A12

Code number : 5122 000 05831

Supplier type : 74H00 ; 9H00

Drawing symbol :

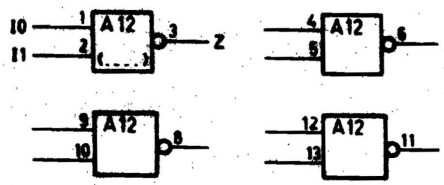

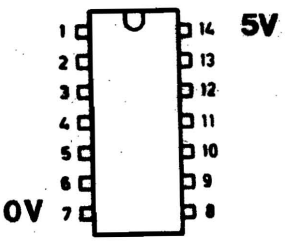

Description :

The A12 comprises four, independent, high speed NAND-gates, each provided with two inputs and a totem pole output stage.

Logic function :

$Z = \overline{I_0 \cdot I_1}$

Function name	:	**ALU00**
Code number	:	9330 649 50XX0
Supplier type	:	FJH211; 7483; 9383
Drawing symbol	:	

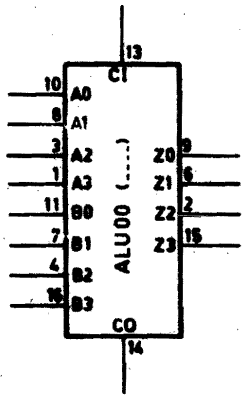

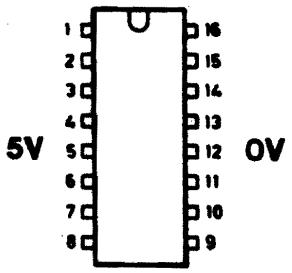

Description :

The ALU00 comprises a full adder for two 4-bit binary numbers (A0 through A3 and B0 through B3) plus a carry input CI. Four outputs (Z0 through Z3) are provided for each bit and the carry output CO is obtained from the last bit.

Function table:

The function table is presented in two parts for simplicity:

- **Input conditions at A0, A1, B0, B1 and CI determine the outputs Z0 and Z1 together with the internal carry C1 obtained from this addition.**
- **Input conditions at A2, A3, B2, B3 and the internal carry C1 determine the outputs Z2, Z3 and CO.**

Input				Output					
				CI=0			CI=1		
						C1=0			C1=1
A0 / A2	B0 / B2	A1 / A3	B1 / B3	Z0 / Z2	Z1 / Z3	C1 / C0	Z0 / Z2	Z1 / Z3	C1 / C0
0	0	0	0	0	0	0	1	0	0
1	0	0	0	1	0	0	0	1	0
0	1	0	0	1	0	0	0	1	0
1	1	0	0	0	1	0	1	1	0
0	0	1	0	0	1	0	1	1	0
1	0	1	0	1	1	0	0	0	1
0	1	1	0	1	1	0	0	0	1
1	1	1	0	0	0	1	1	0	1
0	0	0	1	0	1	0	1	1	0
1	0	0	1	1	1	0	0	0	1
0	1	0	1	1	1	0	0	0	1
1	1	0	1	0	0	1	1	0	1
0	0	1	1	0	0	1	1	0	1
1	0	1	1	1	0	1	0	1	1
0	1	1	1	1	0	1	0	1	1
1	1	1	1	0	1	1	1	1	1

Function name : ALU04

Code number :

Supplier type : FJH201; 7482; 9382

Drawing symbol :

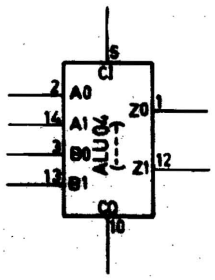

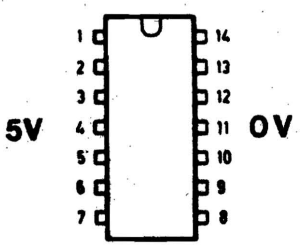

Description :

The ALU04 comprises a full adder for two 2-bit binary numbers (A0 through A1 and B0 through B1) plus a carry input CI. Two outputs (Z0 and Z1) are provided for each bit and the carry output C0 is obtained from the last bit.

Function table :

INPUT				OUTPUT					
				When CI=0			When CI=1		
A0	B0	A1	B1	Z0	Z1	C0	Z0	Z1	C0
0	0	0	0	0	0	0	1	0	0
1	0	0	0	1	0	0	0	1	0
0	1	0	0	1	0	0	0	1	0
1	1	0	0	0	1	0	1	1	0
0	0	1	0	0	1	0	1	1	0
1	0	1	0	1	1	0	0	0	1
0	1	1	0	1	1	0	0	0	1
1	1	1	0	0	0	1	1	0	1
0	0	0	1	0	1	0	1	1	0
1	0	0	1	1	1	0	0	0	1
0	1	0	1	1	1	0	0	0	1
1	1	0	1	0	0	1	1	0	1
0	0	1	1	0	0	1	1	0	1
1	0	1	1	1	0	1	0	1	1
0	1	1	1	1	0	1	0	1	1
1	1	1	1	0	1	1	1	1	1

Function name : **AMP01**
Code number : 9331 353 50112
Supplier type : **TBA281**
Drawing symbol :

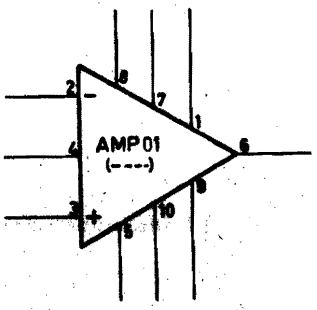

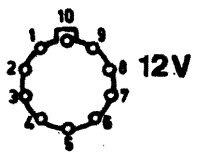

Description :

The AMP01 comprises a monolithic integrated voltage regulator circuit consisting of a temperature compensated reference amplifier, error amplifier, power series feed transistor and a current limiter.
The AMP01 is used in power supplies.
The pins have the following functions:

1) Current sense
2) Inverting input
3) Non-inverting input
4) V-ref
5) Negative supply voltage
6) V-out*
7) V-collector
8) Positive supply voltage
9) Frequency compensation
10) Current limit.

* without external transistor I load max. = 50 mA.

Function name : AMP02
Code number : 9331 370 00112
Supplier type : TBA221; 72741N
Drawing symbol :

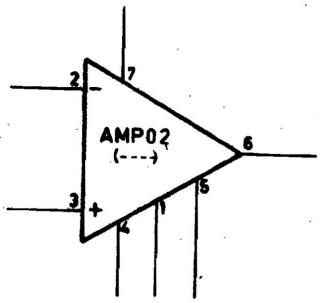

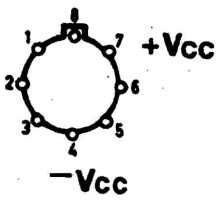

Description :

The TBA221 comprises a high gain d.c. differential amplifier, with a voltage gain of 100.000. The TBA221 does not require external frequency compensation components, has input null adjustment facilities and short circuit protection.

Function name : AOR00

Code number : 9330 502 71XX0

Supplier type : FJH181; 7454; 9N54

Drawing symbol :

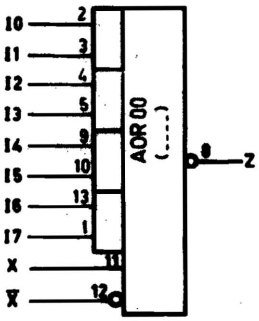

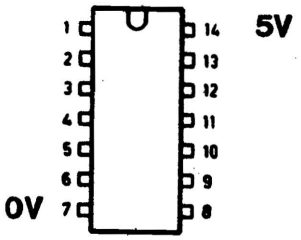

Description :

The AOR00 comprises four two input AND-gates, which are followed by an OR-gate and an inverter. The inverter has a totem pole output stage. The AOR00 has a possibility for expanding via inputs X and $\overline{X}$

Logic function :

$$Z = \overline{I_0 \cdot I_1 + I_2 \cdot I_3 + I_4 \cdot I_5 + I_6 \cdot I_7 + X \cdot \overline{X}}$$

Function name : CNT00

Code number : 9330 887 00XX0

Supplier type : FJB93197; 74197; 93197

Drawing symbol :

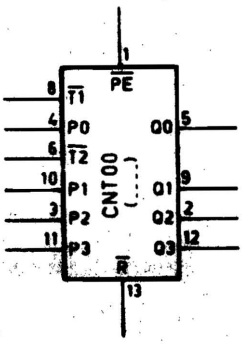

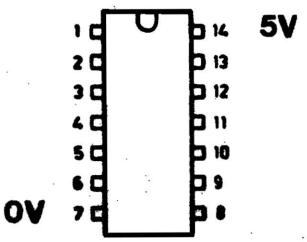

Description :

The presettable decade and binary counter CNT00 comprises a modulo 2 binary counter and a modulo 8 binary counter. By connecting output Q0 (pin 5) to trigger input $\overline{T2}$ (pin 6) the circuit can be used as a modulo 16 counter. The modulo 16 counter can be increased by one upon the negative-going edge of the trigger input $\overline{T1}$, provided that the inputs $\overline{PE}$ and $\overline{R}$ are '1'. The whole counter can be reset by making input $\overline{R}$ '0'.
The information at the inputs P0, P1, P2 and P3 is stored and placed on the outputs Q0, Q1, Q2 and Q3 as soon as the input $\overline{PE}$ becomes '0', provided that the input $\overline{R}$ is '1'.
The modulo 2 counter can be increased by one upon the negative-going edge of trigger input $\overline{T1}$, provided that the inputs $\overline{PE}$ and $\overline{R}$ are '1'.
The modulo 8 counter can be increased by one upon the negative-going edge of the trigger input $\overline{T2}$, provided that the inputs $\overline{PE}$ and $\overline{R}$ are '1'.

Timing diagram :

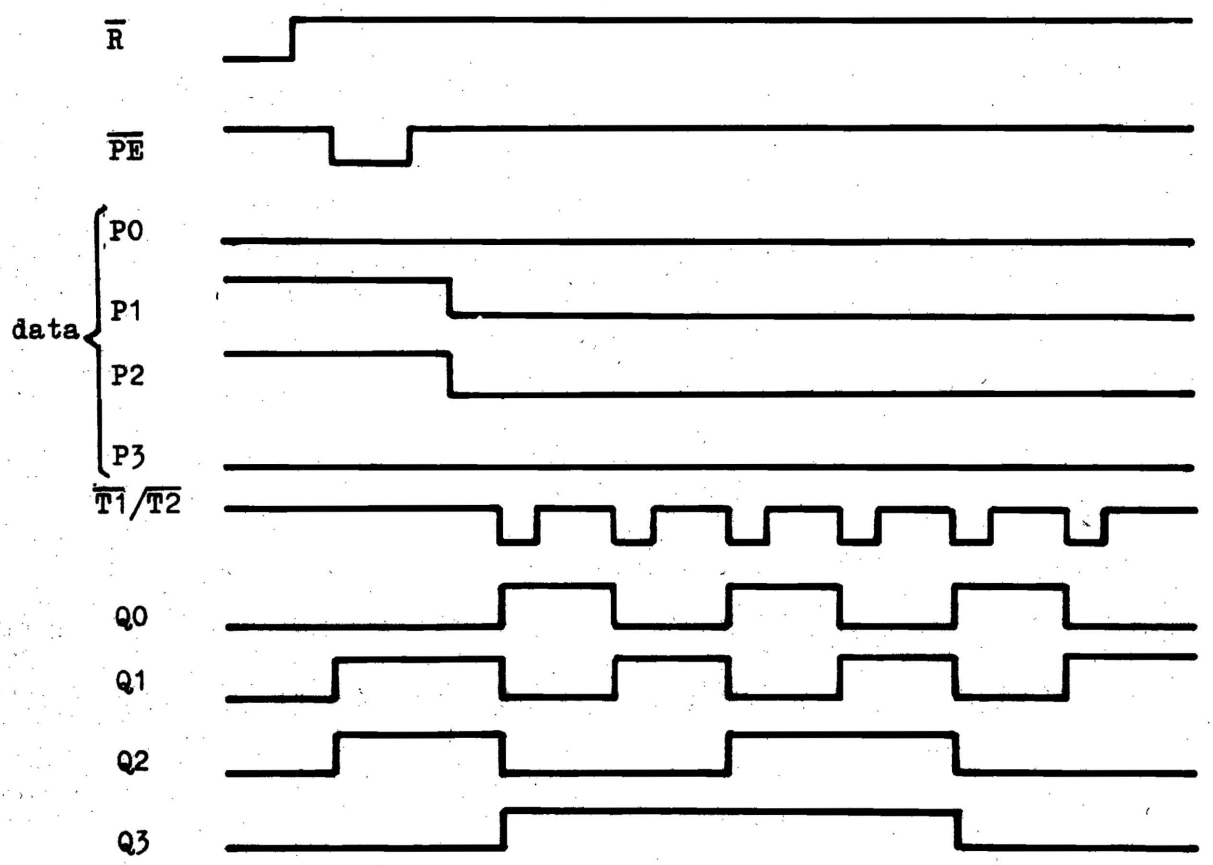

Note: Q0 is not connected to $\overline{T2}$

Function name : CNT01

Code number : 9331 623 70XX0

Supplier type : FJB93191; 74191; 93191

Drawing symbol :

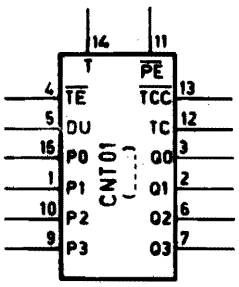

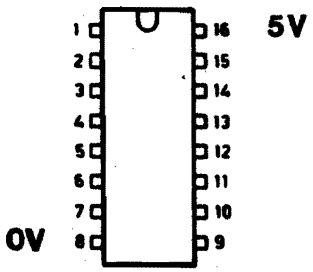

Description :

The CNT01 is a 4-bit binary up/down counter. The outputs Q0 thr. Q3 may be preset to any state by placing the desired data on the inputs P0 thr.P3 and an '0' on input $\overline{PE}$. The outputs Q0 thr. Q3 can be changed on the positive-going edge of the input T if the enable input $\overline{TE}$ is '0'. A '1' at input $\overline{TE}$ inhibits counting. Level changes at the enable input $\overline{TE}$ should be made only when input T is '1'. The direction of the count is determined by the state of the down/up input DU. When the input is '0', the counter counts up and when the input is '1', it counts down. The output TC is '1' when the count on the outputs Q0 thr. Q3 is 0 (counting down) or 15 (counting up). The logic function is $TC = Q0.Q1.Q2.Q3.\ DU + Q0.Q1.Q2.Q3.\ \overline{DU}$. The output $\overline{TCC}$ is '0' when the count on the outputs Q0 thr. Q3 is 0 (counting down) or 15 (counting up) and only during the time that the inputs T and $\overline{TE}$ are '0'.
The counter can be reset by placing all zero's on the inputs P0 thr. P3 and an '0' on input $\overline{PE}$.

Timing diagram :

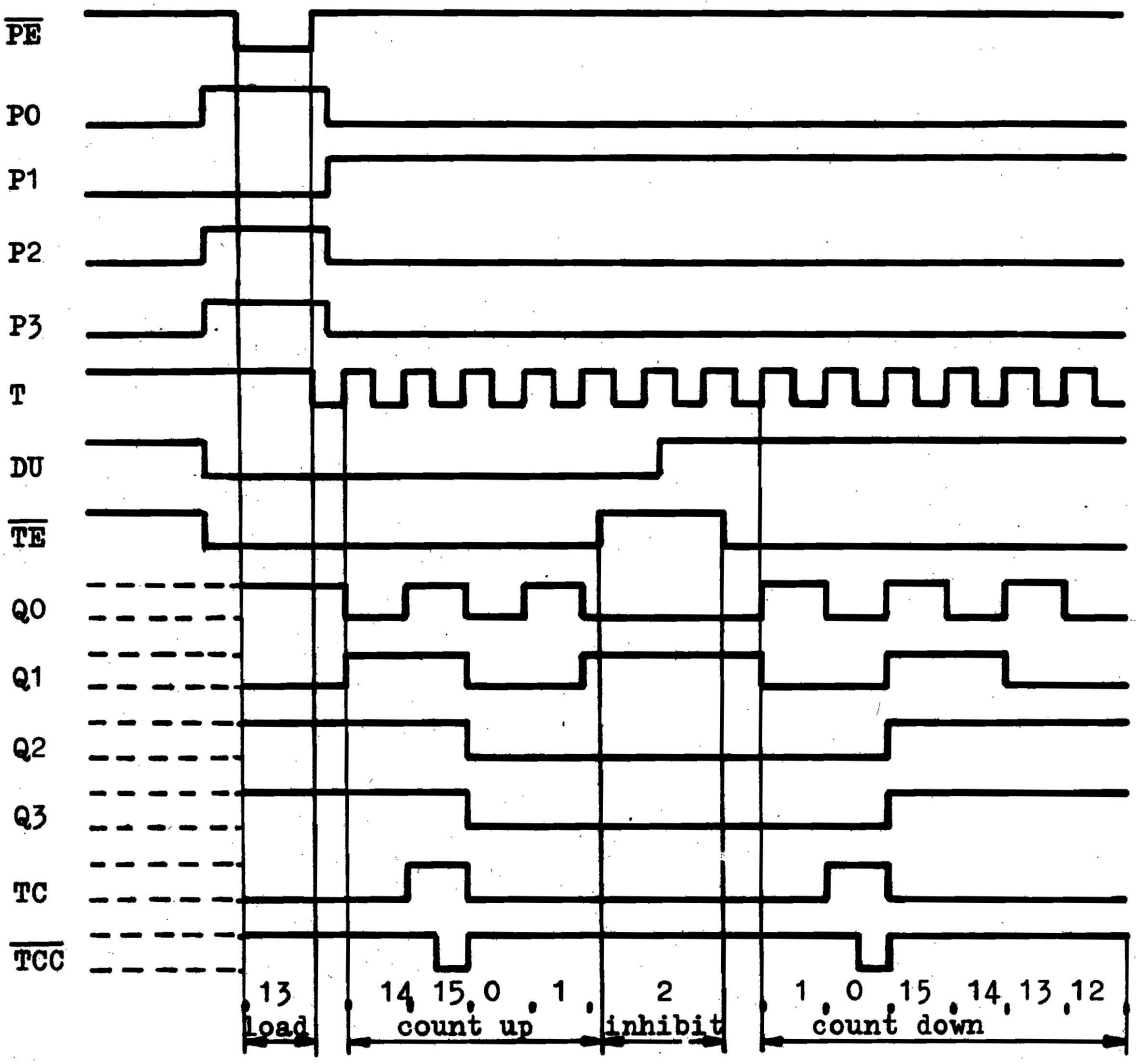

Function name : D00

Code number : 9330 504 70XX0

Supplier type : FJJ131; 7474; 9N74

Drawing symbol :

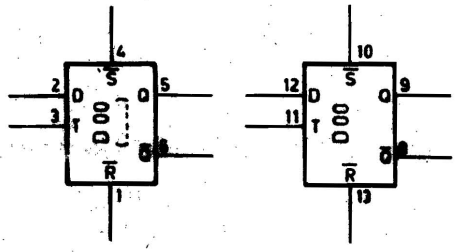

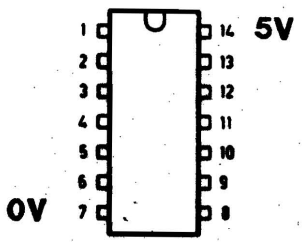

Description :

The D00 comprises two independent edge-triggered D-type flip-flops with direct SET and RESET inputs. On the positive-going edge of the trigger input T, the information on the D-input will be stored and placed on the outputs Q and $\overline{Q}$.

Function table :

D	T	Q	$\overline{Q}$
0	↓	0	1
1	↓	1	0

Note: both inputs $\overline{S}$ and $\overline{R}$ must be '1'

Function name : D01

Code number : 9330 648 10XX0

Supplier type : FJJ181; 7475; 9375

Drawing symbol :

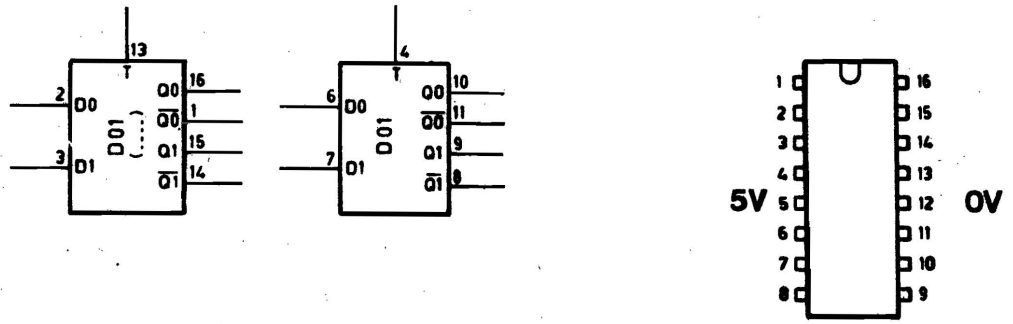

Description :

The D01 comprises four D-type flip-flops. Each of the two flip-flops has a common trigger input. During the time the trigger input is high, changes on the data input will be transferred to the outputs. When the trigger input is low, the outputs are unaffected by the input.

Function table :

D	T	Q	$\overline{Q}$
0	1	0	1
1	1	1	0

Function name : EOR00

Code number : 9331 329 60XX0

Supplier type : FJH271; 7486; 9N86

Drawing symbol :

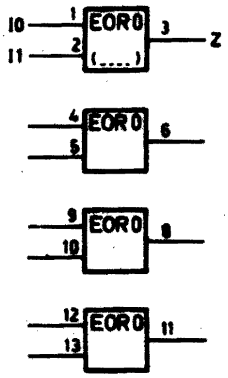

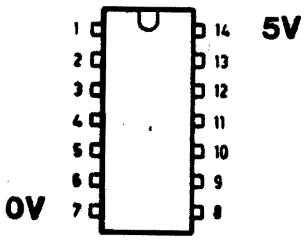

Description :

The EOR00 comprises four, independent exclusive OR-gates, each provided with two inputs and a totem pole output stage.

Logic function :

$Z = I_0.\overline{I_1} + \overline{I_0}.I_1$

Function table :

I_0	I_1	Z
0	0	0
0	1	1
1	0	1
1	1	0

Function name : JK00

Code number :

Supplier type : 74H106; 9H106

Drawing symbol :

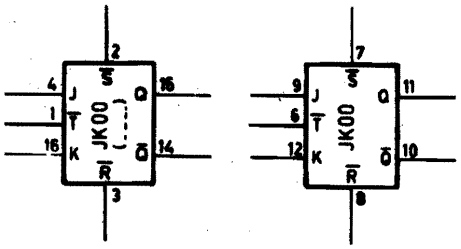

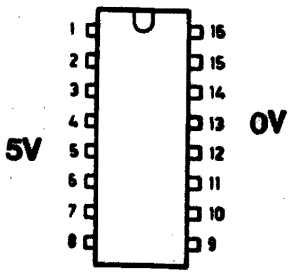

Description :

The JK00 comprises two, independent, negative-edge triggered JK flip-flops with direct SET and RESET inputs. If the J-input is '1' and the K-input '0', the flip-flop will be set on the negative-going edge of input $\overline{T}$. If the J-input is '0' and the K-input '1', the flip-flop will be reset. When both J and K inputs are '1', the outputs Q and $\overline{Q}$ will change on every negative-going edge of the trigger input $\overline{T}$ (the flip-flop is toggling). The flip-flop can be set or reset directly by placing a '0' on input $\overline{S}$ or $\overline{R}$ respectively. These inputs override all other inputs.

Function table :

J	K	$\overline{T}$	OLD Q	OLD $\overline{Q}$	NEW Q	NEW $\overline{Q}$
0	0	↓	0	1	0	1
			1	0	1	0
0	1	↓	0	1	0	1
			1	0	0	1
1	0	↓	0	1	1	0
			1	0	1	0
1	1	↓	0	1	1	0
			1	0	0	1

Note: the inputs $\overline{S}$ and $\overline{R}$ must be '1'

Function name : N00

Code number : 9331 094 31XX0

Supplier type : FJH241; 7404; 9N04

Drawing symbol :

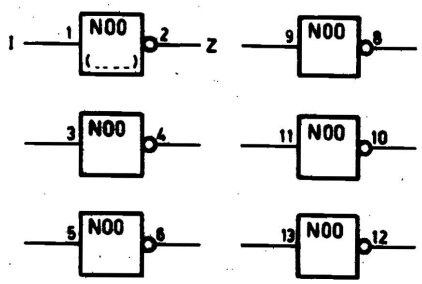

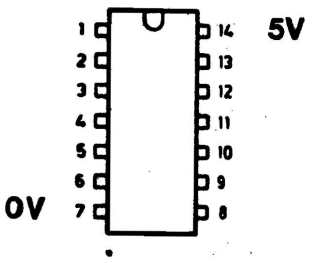

Description :

The N00 comprises six,independent inverters with a totem pole output stage.

Function table :

I	Z
0	1
1	0

Function name : OR00

Code number : 9330 806 21XX0

Supplier type : FJH221; 7402; 9N02

Drawing symbol :

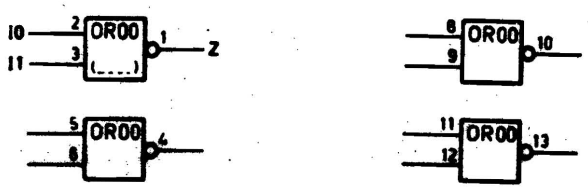

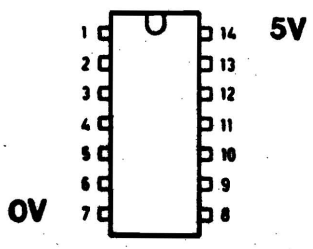

Description :

The OR00 comprises four independent NOR-gates, each provided with two inputs and a totem pole output stage.

Logic function :

$$Z = \overline{I_0 + I_1}$$

Function name	:	OS00
Code number	:	9331 667 30XX0
Supplier type	:	74123
Drawing symbol	:	

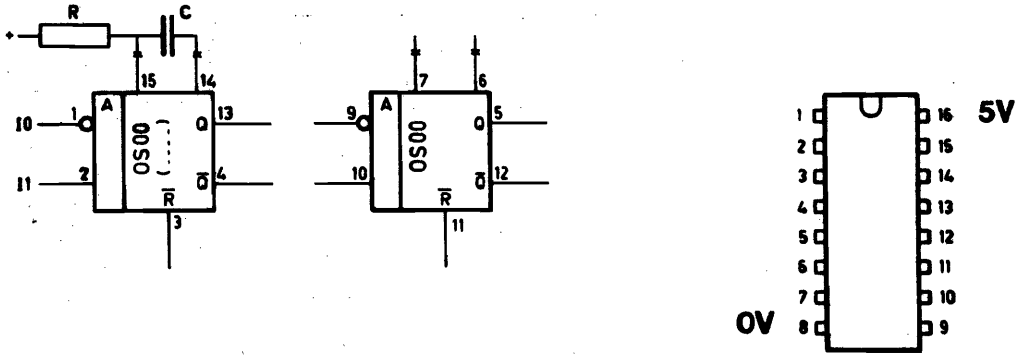

Description :

The OS00 comprises two re-triggerable, monostable multivibrators. By triggering the one-shot before the output pulse is terminated, the output pulse will be extended. The input $\overline{R}$ permits any output pulse to be terminated at a time independent of the timing components R and C.
Input I_0 is a negative-edge triggered input and will trigger the one-shot when it becomes '0', as long as input I_1 is '1'. Input I_1 is a positive-edge triggered input and will trigger the one-shot when it becomes '1', as long as input I_0 is '0'. The duration T (see timing diagram) of the output Q and $\overline{Q}$ depends on the RC network which is connected externally to the integrated circuit.
When input $\overline{R}$ becomes '0' it will terminate the output pulses.

Function table :

Inputs		Outputs	
I_0	I_1	Q	$\overline{Q}$
1	*	0	1
*	0	0	1
0	↓	⊓	⊔
↓	1	⊓	⊔

* =don't care

Timing diagram :

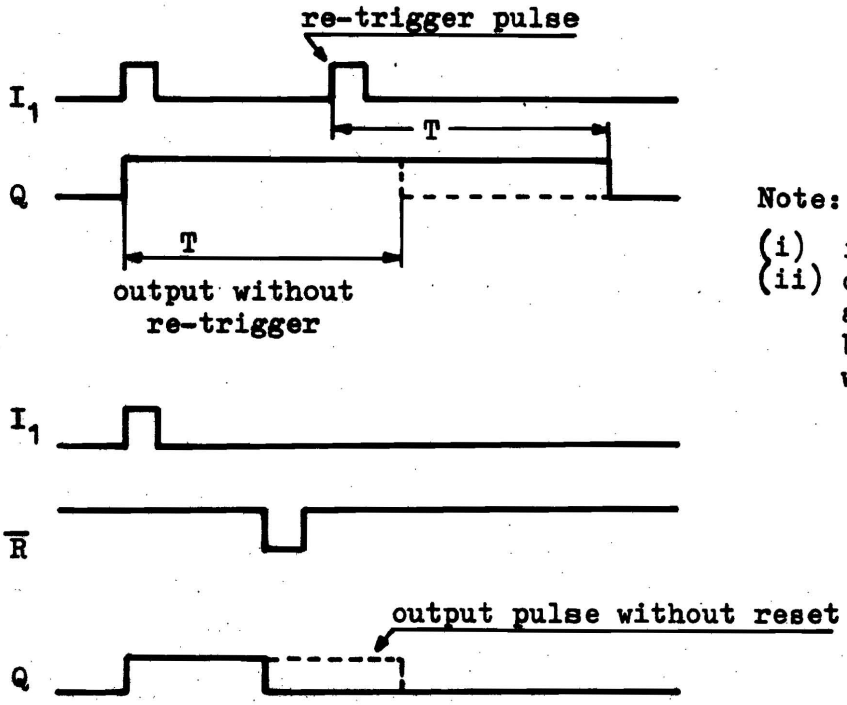

Note:

(i) input I_0 must be '0'.
(ii) outputs are similarly affected when triggered by input I_0 ('1' to '0') with I_1 held at a '1'.

AO	AREA AROUND EVEN TRACK
A12	AREA BETWEEN ODD AND EVEN TRACK
ABO THR 7	ADDRESS AND CONTROL BUS BIT 0 THR 7
ANER	ANALOGUE ERROR
AT	ATTENTION
BIR	BRUSH IN RETRACTED
BIRA	CLEANING BRUSH IN RETRACTED ACTIVE
BIRN	CLEANING BRUSH IN RETRACTED NOT ACTIVE
BPDA	BLOCKADE POSITIONER DRIFTS AWAY
BWC	BLOCKADE WRITE CURRENT
CA	CLEANING CYCLE ALLOWED
CAO THR 7	CYLINDER ADDRESS REGISTER BIT 0 THR 7
CAE	CYLINDER ADDRESS REGISTER EXTENDED
CAS	CYLINDER ADDRESS SELECT
CDF3	CARRY DIFFERENCE BIT 3
CDF7	CARRY DIFFERENCE BIT 7
CDFE	CARRY DIFFERENCE EXTENDED
CDS	CHECK DISK SPEED
CIP	CARRIDGE IN PACK
CL	CLAMP LOCK ENERGIZED
CME	CLEANING MOTOR ENERGIZED
CMEZ0	RESET CME
CMEZ1	SET CME
CON	ON CYLINDER
COSX	COSINE X MEANDER SIGNAL
CP	CURRENT POSITIONER
CS	CYLINDER SELECT COMMAND
CTS	CONTROL SELECT COMMAND
DCO THR 7	DECREMENT COUNTER BIT 0 THR 7
DCOD	DECREMENT COUNTER BIT 0 DECREMENTED
DC7D	DECREMENT COUNTER BIT 7 DECREMENTED
DCE	DECREMENT COUNTER EXTENDED BIT
DCEE	DECREMENT COUNTER EXTENDED BIT TO ELECTRONIC PART
DCP	DECREMENT COUNTER PREPARATION
DE	DECELERATE
DEB	DE-ENERGIZE EMERGENCY BRAKE
DEO	DECREMENT COUNTER EQUAL ONE
DETON	DETECT TRACK ONE NEGATIVE
DEZ	DECREMENT COUNTER EQUAL ZERO
DEZO	RESET DECREMENT COUNTER
DFO THR 7	DIFFERENCE BIT 0 THR 7
DFF	DIRECTION IS FORCED FORWARD
DFFZD	DIRECTION IS FORCED FORWARD
DFFZ0	RESET DFF
DFFZ1	SET DFF
DID	DATA IN DANGER
DIPC	DETECT INDEX PULSE CARTRIDGE R
DIPF	DETECT INDEX PULSE FIXED DISK
DMR	DIFFERENCE BETWEEN MOMENTORY AND REQUIRED SPEED
DNC	DRIVE NEGATIVE CURRENT
DOF	DECREMENT ONE STEP FORCED
DPC	DRIVE POSITIVE CURRENT
DPM	DE-ENERGIZE PAK MOTOR
DRS	DRIVER SIGNAL
EC	ENABLE COUNT
EDC	ENABLE DATA TO DECREMENT COUNTER
EEE	EVEN END POSITION TO ELECTRONIC PART
EIP	ENABLE INDEX PULSE
ELER	ELECTRONIC ERROR (READ/WRITE)
EMB	EMERGENCY BRAKE
EP	END OF POSITIONING
EPM	ENERGISE PAK MOTOR
EPZ0	RESET EP
EPZ1	SET EP
EPZD	END OF POSITIONING
ER	ERASE ENABLE
ERC	ERASE CURRENT
ERE	ERASE ENABLE COMMAND
ETP	EVEN TRACK PULSE
EWEC	ERASE AND/OR WRITE COMMAND
EXC	EXCHANGE CARTRIDGE
FNG	FIRST SEEK NORMAL END
FNEZ0	RESET FNE
FNEZ1	SET FNE
FSF	FIRST SEEK
H0	HEAD REGISTER BIT 0
H1	HEAD REGISTER BIT 1
HS	HEAD SELECT
IC1	INDEX CARTRIDGE 1
IC2	INDEX CARTRIDGE 2
IF1	INDEX FIXED DISK 1
IF2	INDEX FIXED DISK 2
INS	INITIATE NORMAL SEEK
I0	INTEGRATOR OUT
IPC	INDEX PULSE CARTRIDGE
IPCP	INDEX PULSE CARTRIDGE PREPARATION
IPF	INDEX PULSE FIXED DISK
IPFP	INDEX PULSE FIXED DISK PREPARATION
IRDC	INTERNAL READ CLOCK
IS	INITIATE A SEEK
ISPC	INDEX SECTOR PULSE CARTRIDGE
ISPF	INDEX SECTOR PULSE FIXED DISK
IW	INITIAL WAIT
IWZ1	SET IW
LHC	LOWER HEAD CARTRIDGE
LHF	LOWER HEAD FIXED DISK
MAD	MAXIMUM AT DA-CONVERTER
MC	MASTER CLEAR
MNC	MECHANICAL ON CYLINDER
MOD	MECHANICAL ON CYLINDER DETECT
NCD	NEGATIVE COSINE X MEANDER SIGNAL DE-MODULATED
NS	NORMAL SEEK
NSP	NORMAL SEEK COMMAND PREPARATION
NSTD	NEGATIVE SPEED TRANSDUCER
OPZ	OPTICAL ZERO
OTP	ODD TRACK PULSE
PAT	PREPARATION
PATT	PREPARATION ATTENTION TRIGGER
PATZ0	RESET PAT
PATZ1	SET PAT
PCD	POSITIVE COS X MEANDER DEMODULATED
PDA	POSITION DRIFTS AWAY OR NO MEANDER SIGNAL
PEEN	PREPARATION EVEN END POSITION NEXT
PEXC	PREPARATION EXCHANGE OF CARTRIDGE
PLSL	PLURAL SELECTION
PMD	PACK MOTOR DE-ENERGIZED
PME	PACK MOTOR ENERGISE
PMZ1	SET PME

POC	POWER ON OFF CLEAR
POCT	POWER ON OFF CLEAR TEST
PONC	PREPARATION ON CYLINDER
PONO	POSITIONER OVER TRACK ONE NEGATIVE
PS	POSITIONING SERVO
PSD	POSITIVE SINE X MEANDER SIGNAL DEMODULATED
PSTD	POSITIVE SPEED TRANSDUCER
RC	READ CONTROL
RD1,2	READ DATA FROM PRE-AMPLIFIER
RDDA	READ DATA
RDE	READ DATA ENABLE
RE	READ ENABLE COMMAND
REDET	RESET DETECT TRACK ONE NEGATIVE FLIP-FLOP
REPS	RESET END OF POSITION SIGNAL
RER	RECOVERABLE ERROR
RERZO	RESET RER
RERZ1	SET RER
RETN	RETRACTED SWITCH NOT ACTIVE
REW	READ AND ERASE OR WRITE ENABLE
RP	RETRACTED POSITION
RTO	READY TO OPERATE
RUS	RESET UNSAFE
RWC	REDUCE WRITE CURRENT
RZ	RETURN TO ZERO
RZC	RETURN TO ZERO COMMAND
RZS	RETURN TO ZERO SEEK
S	START FLIP-FLOP
SAL	START ALLOWED
SAR	STOPPED AND IN RETRACTED
SBD	START/STOP BUTTON DOWN
SBP	START/STOP BUTTON PRESSED
SBU	START/STOP BUTTON UP
SCX	SINE X AND COSINE X
SD	PACK SPEED DROPS DURING NORMAL SEEK
SDEB	SPEED DROPS OR EMERGENCY BROKE
SEMB	SET EMB
SINX	SINE X
SIW	SPEED IN WINDOW
SLOW	SLOW
SM	SLOW MOTION FLIP-FLOP
SMZ1	SET SLOW MOTION FLIP-FLOP
SMZD	SLOW MOTION
SMZH	SLOW MOTION
SPC	SECTOR PULSE CARTRIDGE
SPCP	SECTOR PULSE CARTRIDGE PREPARATION
SPF	SECTOR PULSE FIXED DISK
SPFP	SECTOR PULSE FIXED DISK PREPARATION
SR	SLOW REVERSE
START	START
STL	SEEK CONTINUES TOO LONG
SUS	SET UNSAFE
SZO	RESET START FLIP-FLOP
TC	TRACK COUNT FLIP-FLOP
TCO1-12	TIME COUNTER BIT 01 TILL BIT 12
TC1011	TIME COUNTER BIT 10 and 11
TCZ	TRACK CENTRE ZERO
TCZO	RESET TIME COUNTER
TDFFB	TEST POINT SIGNAL DFF
TDMR	TEST POINT SIGNAL DMR
TDRS	TEST DRIVER SIGNAL DRS
TPS	TEST POSITIONING SERVO
TPWEV	TEST WRITE ERASE VOLTAGE
TRZ	TRACK ZERO
TSRM	TEST RESISTOR DIODE MATRIX
TWSIW	TEST WINDOW SPEED IN WINDOW
UHC	UPPER HEAD CARTRIDGE
UHF	UPPER HEAD FIXED DISK
UNS	UNSAFE
UNSZ1	SET UNS
UR	UNIT READY
URI	UNIT READY INDICATOR
USA1	UNSAFE 1
USA2	UNSAFE 2
USA3	UNSAFE 3
USAF	UNSAFE FLIP-FLOP
USAZ1	SET USA
USL	UNIT SELECT
UZO	RESET UNSAFE
VPC	VOLTAGE PROPORTIONAL TO CURRENT THROUGH POSITIONER COIL
WDRW	WRITE DATA RETURN WIRE
WOC	WAIT FOR ON CYLINDER MULTIVIBRATOR
WPI	WRITE PROTECT INDICATOR
WR	WRITE ENABLE
WRDA	WRITE DATA
WRC1	WRITE CURRENT 1
WRC2	WRITE CURRENT 2
WRE	WRITE ENABLE COMMAND
WSIW	TO WINDOW SPEED IN WINDOW
WTC	WITHIN TRACK CENTRE

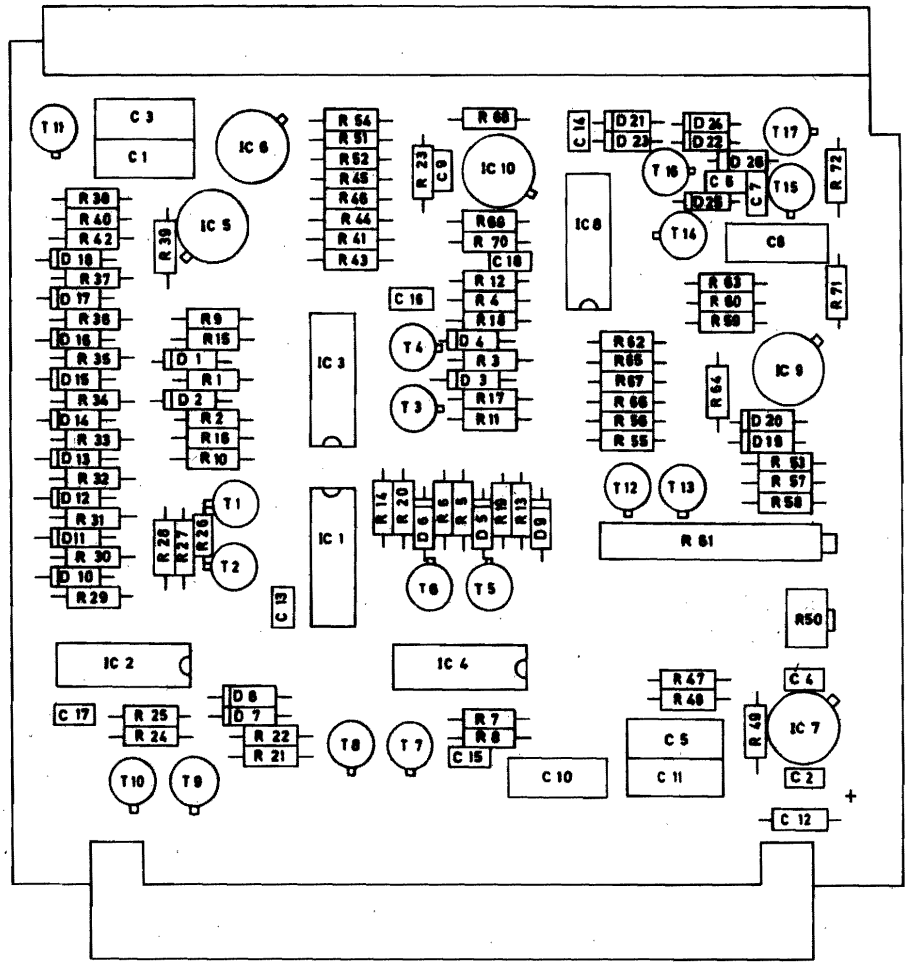

Figure 4-2A CARD DA
COMPONENT SURVEY

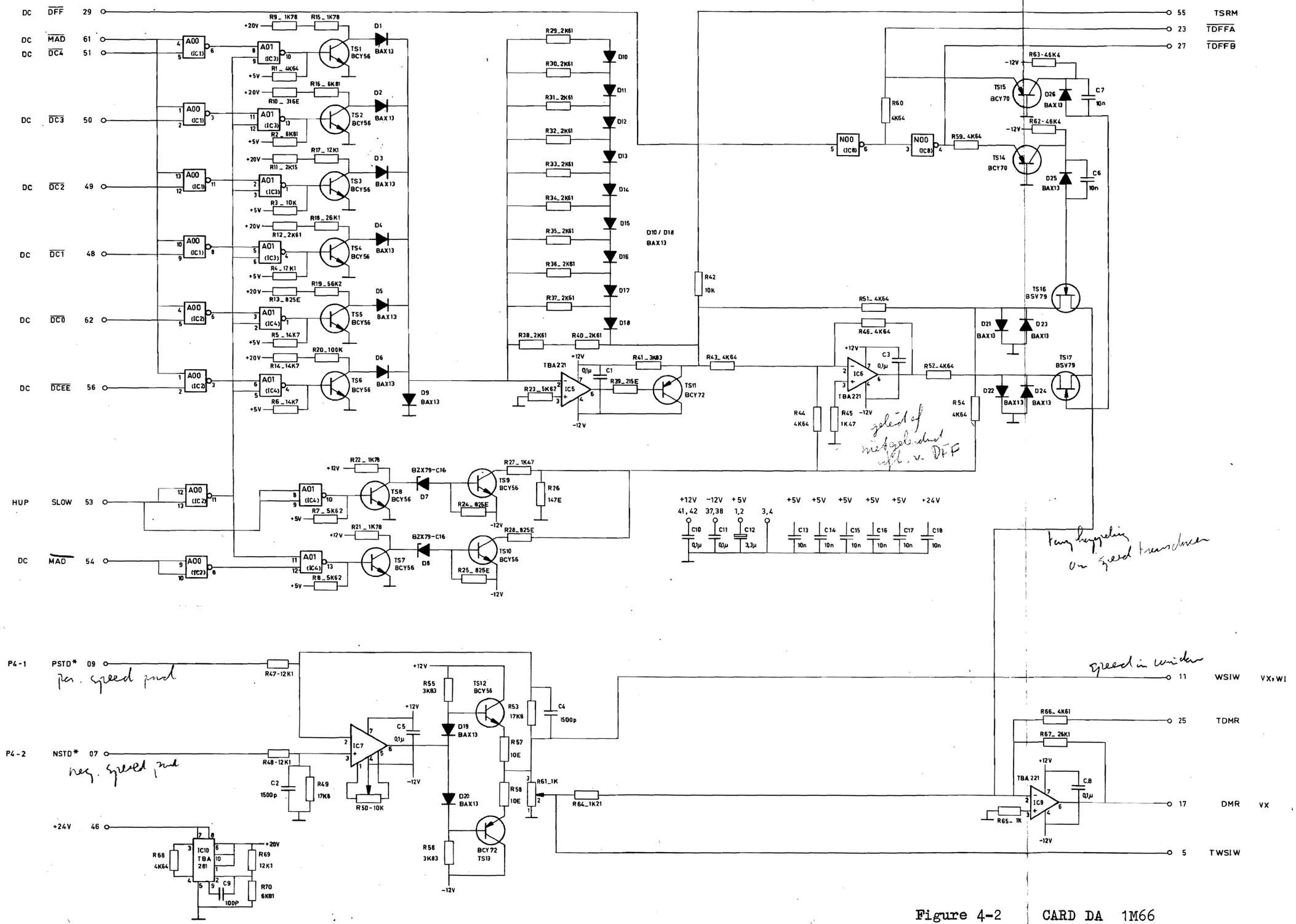

Figure 4-2 CARD DA 1M66

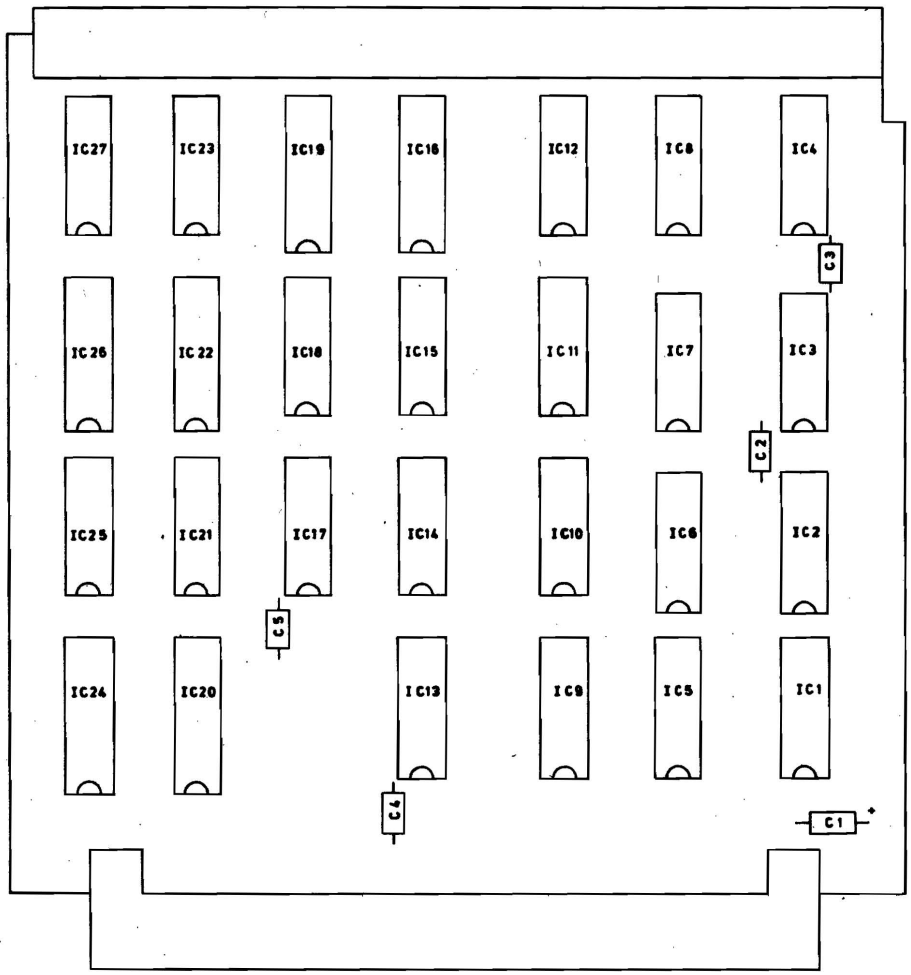

Figure 4-3A CARD DC
COMPONENT SURVEY

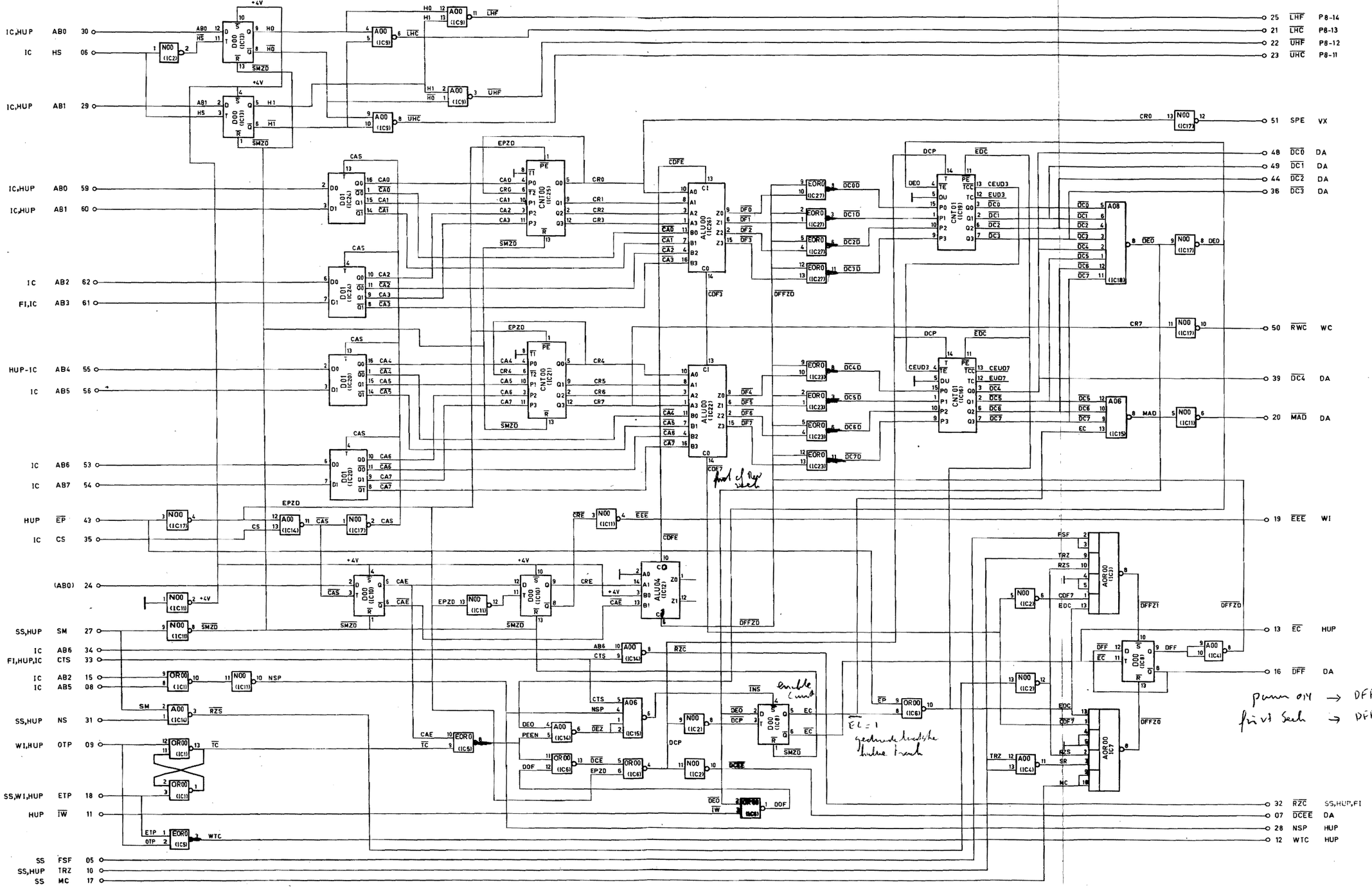

Figure 4-3 CARD DC 1L99

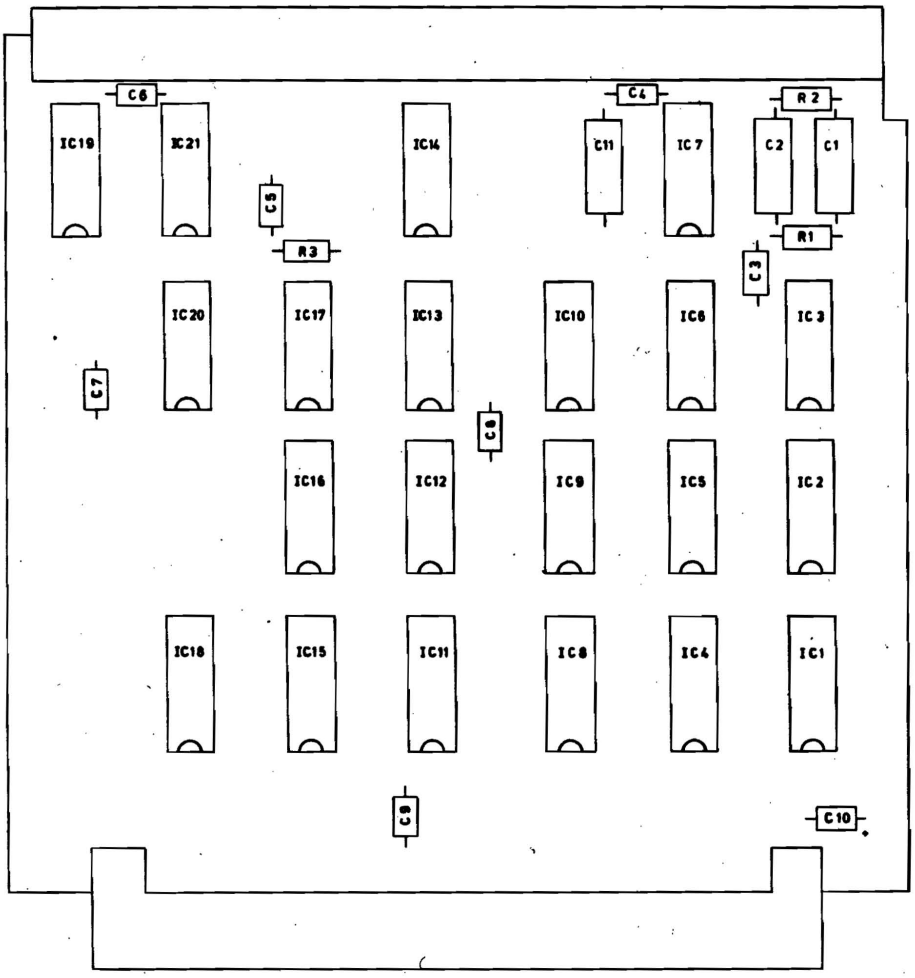

Figure 4-4A CARD HUP
COMPONENT SURVEY

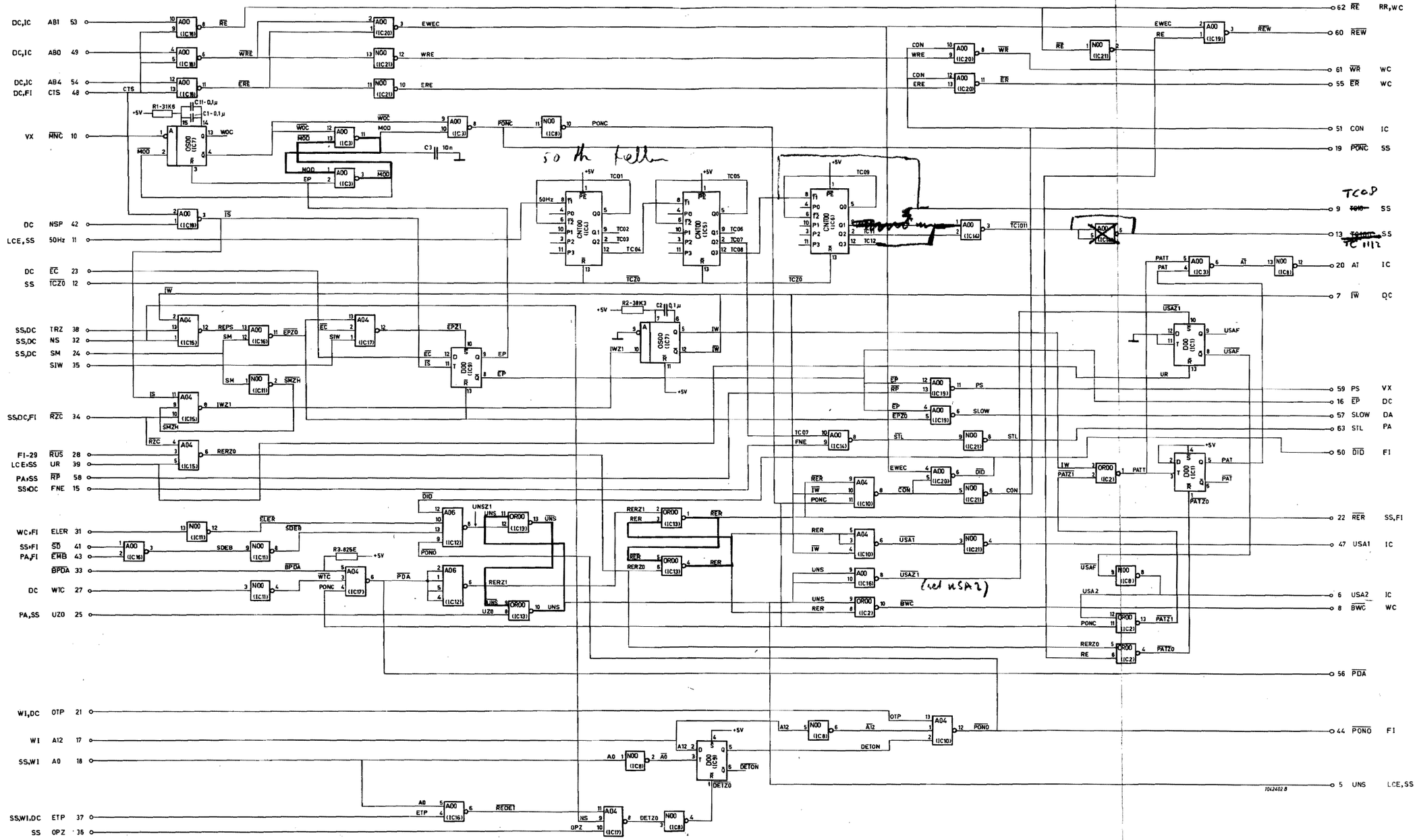

Figure 4-4 CARD HUP 1L97

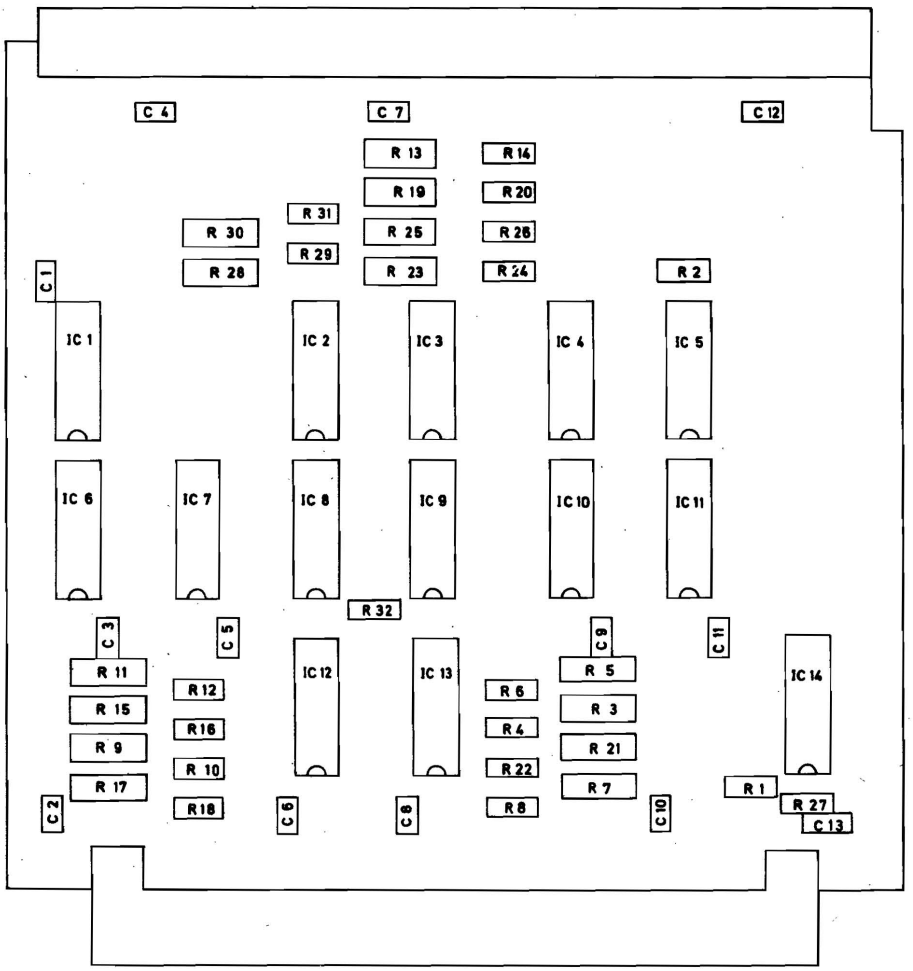

Figure 4-5A CARD INT

CARD SURVEY

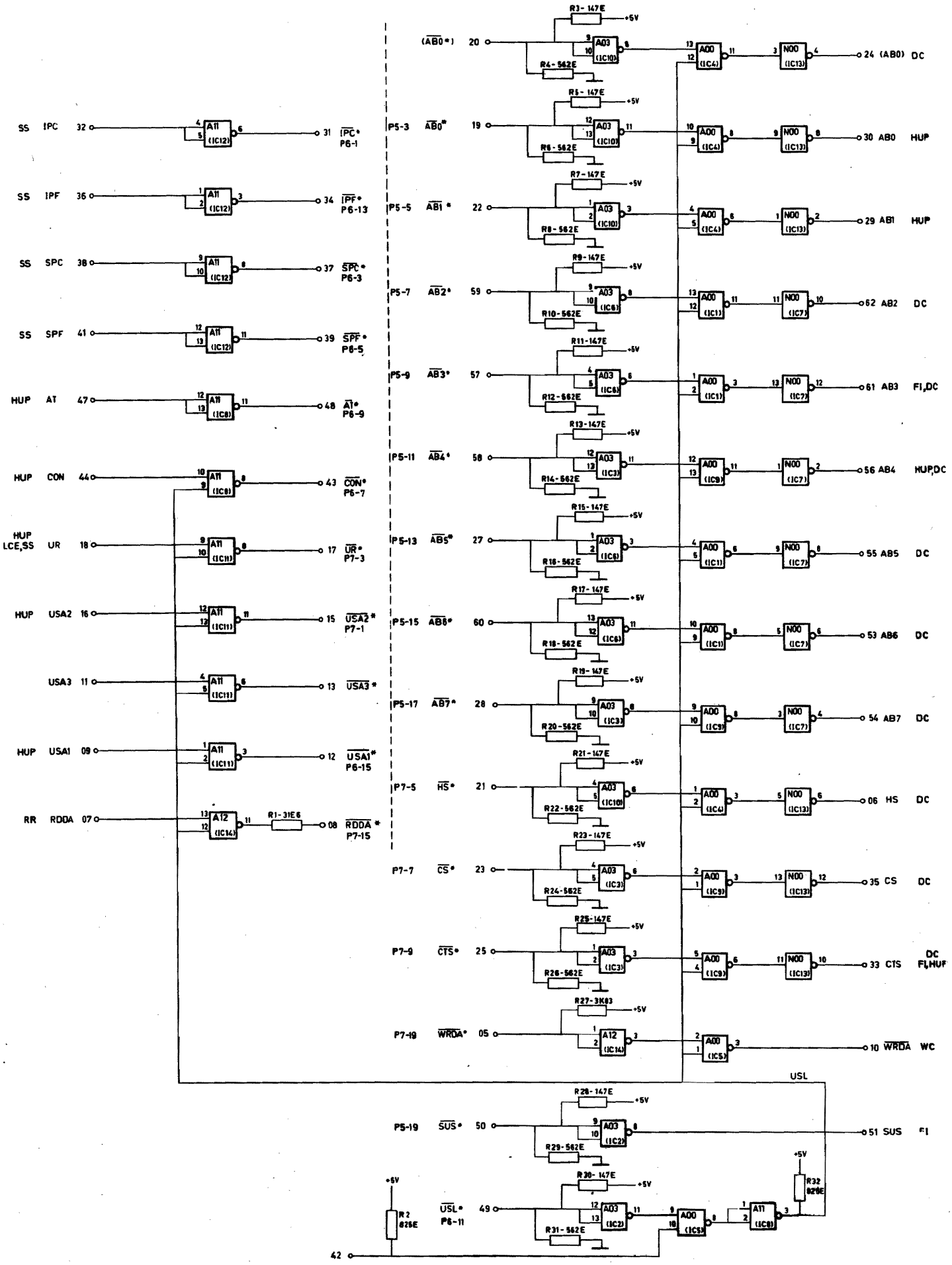

Figure 4-5 CARD INT 2L00

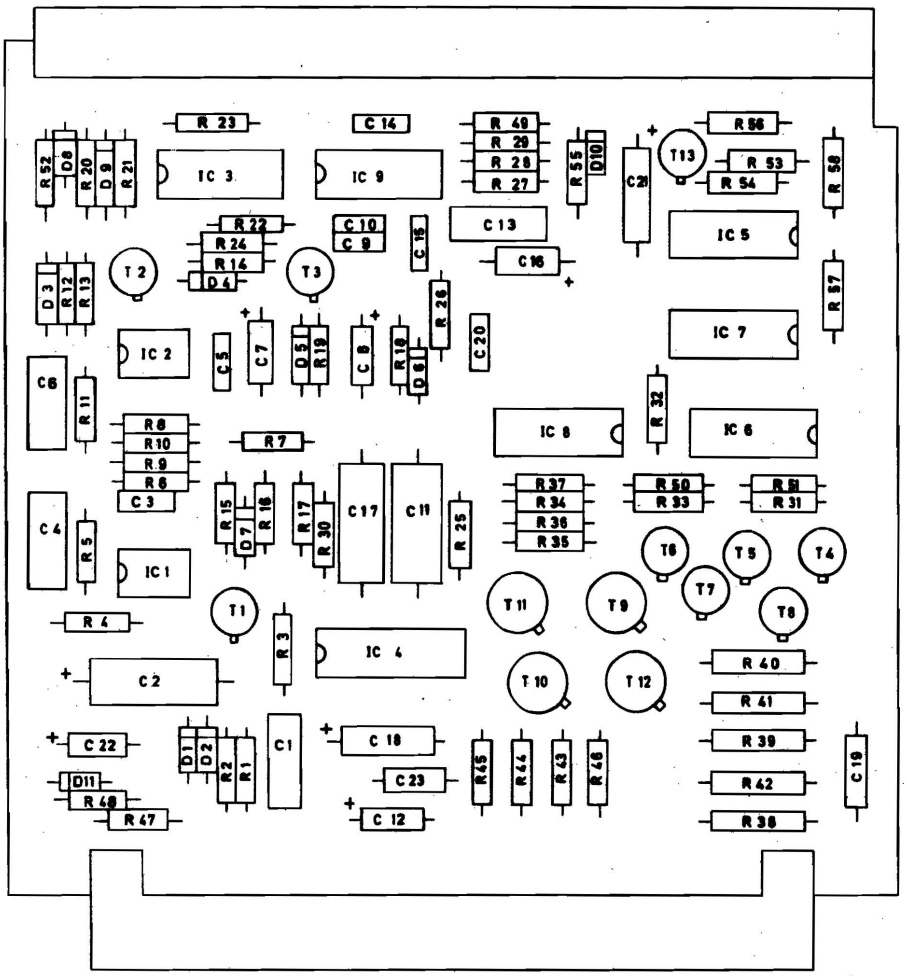

Figure 4-6A CARD LCE
COMPONENT SURVEY

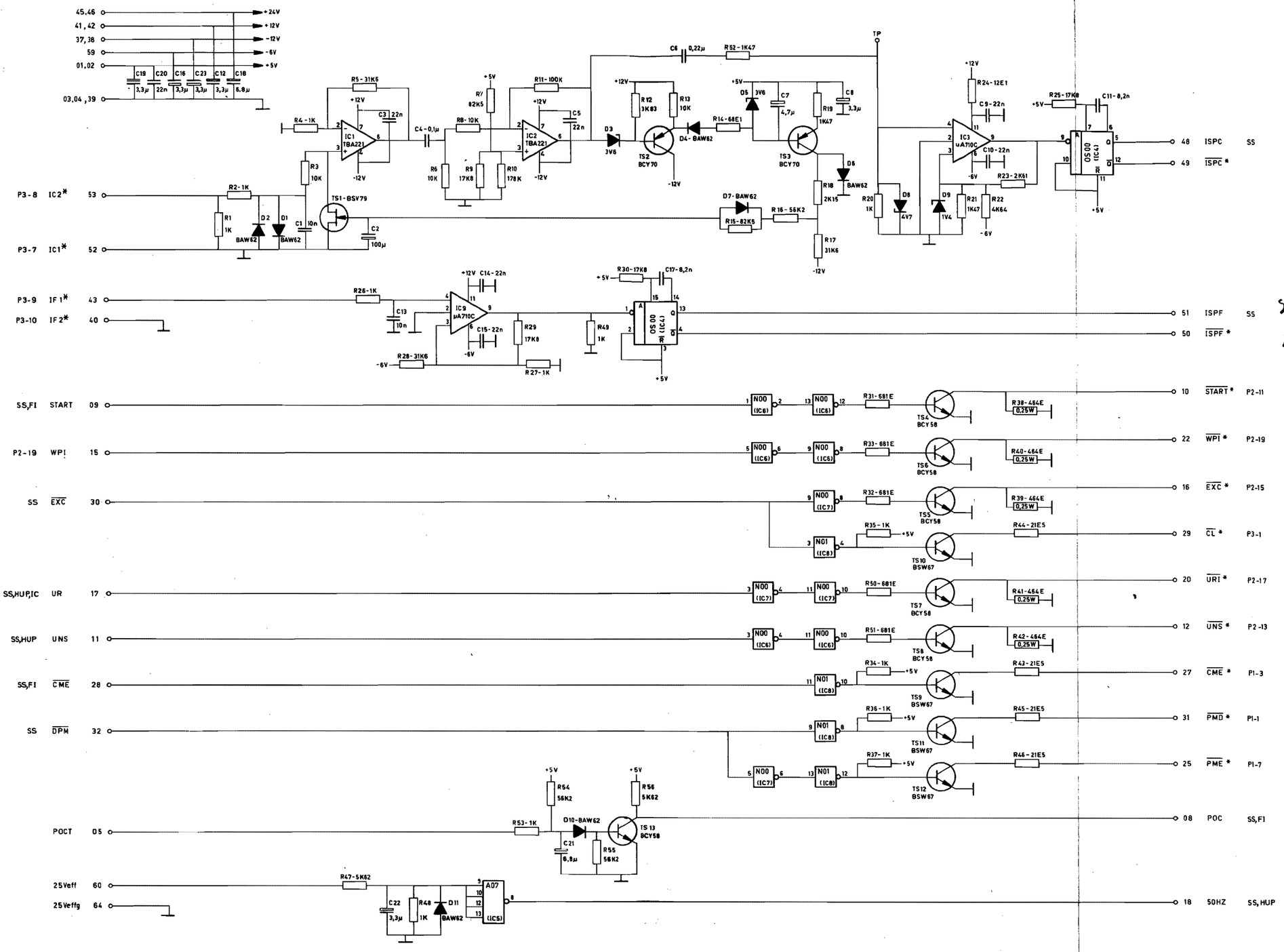

Figure 4-6 CARD LCE 1M64

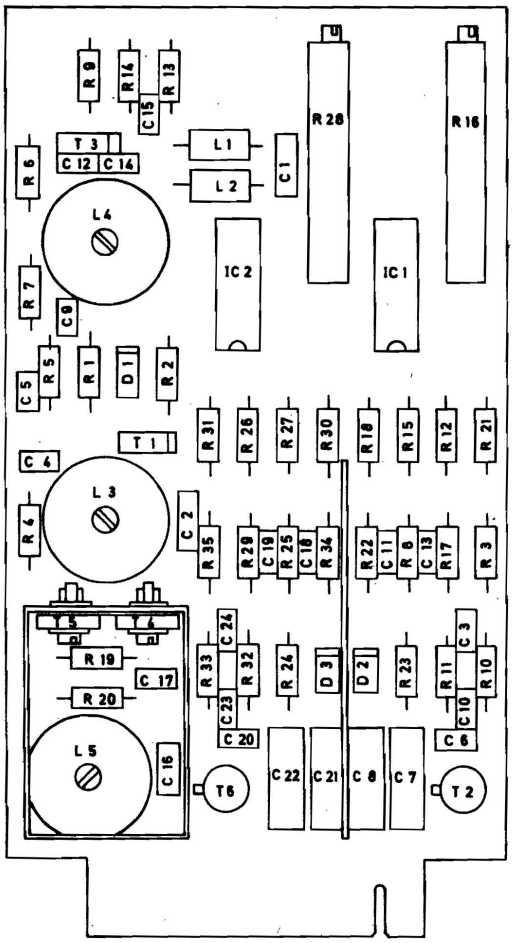

Figure 4-7A CARD MEANDER
COMPONENT SURVEY

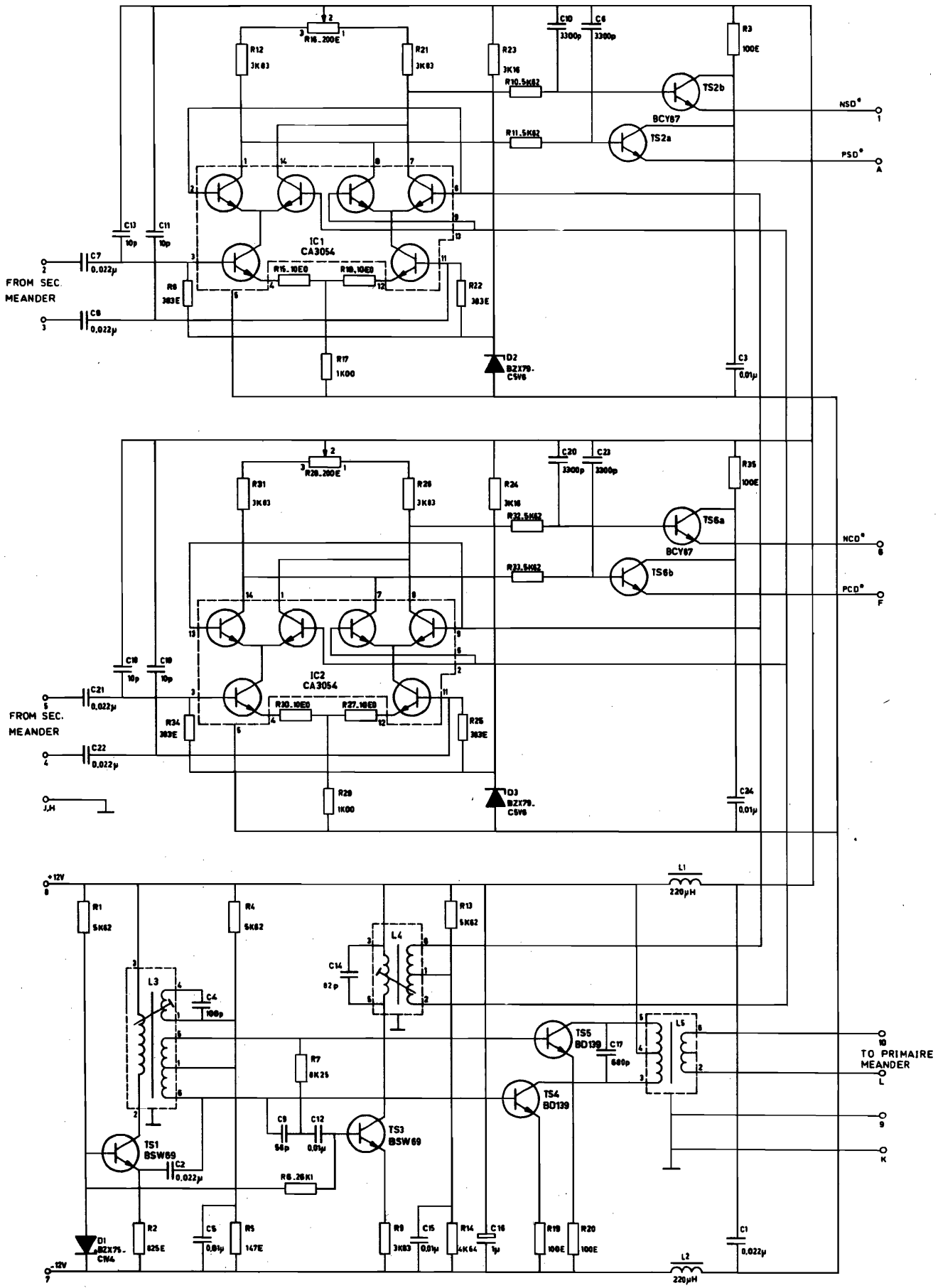

Figure 4-7 CARD MEANDER

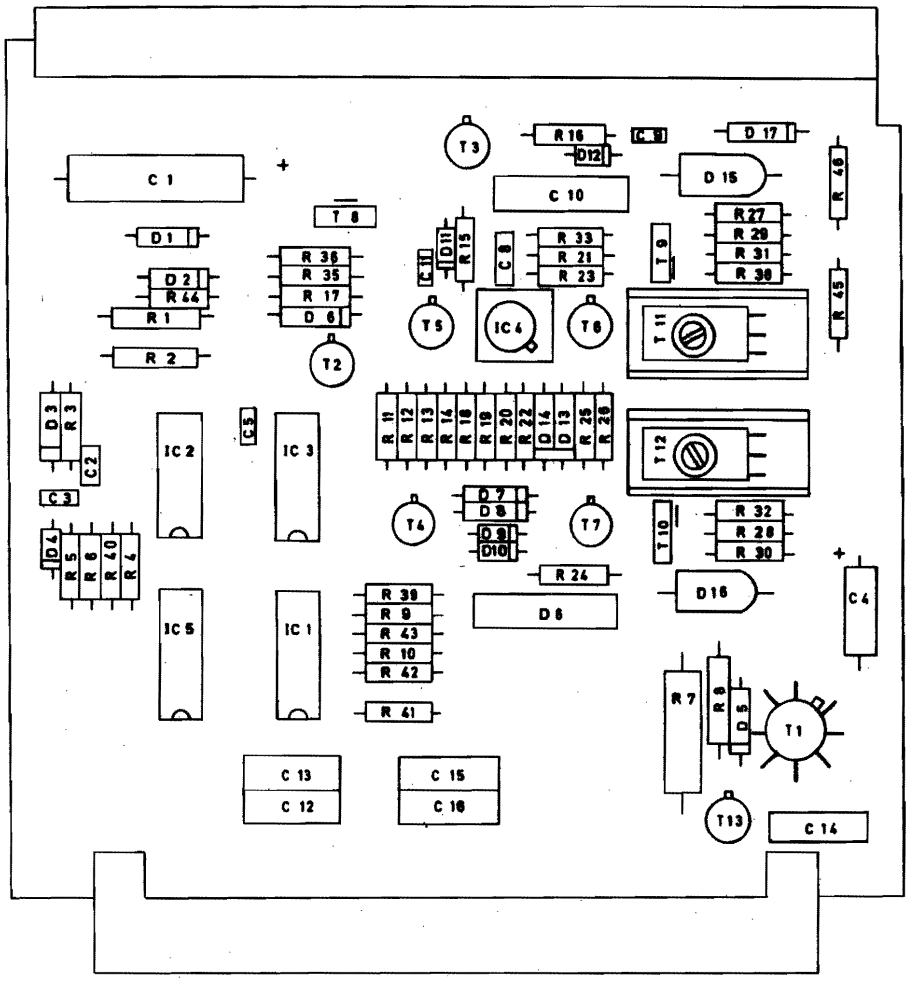

Figure 4-8A CARD PA
COMPONENT SURVEY

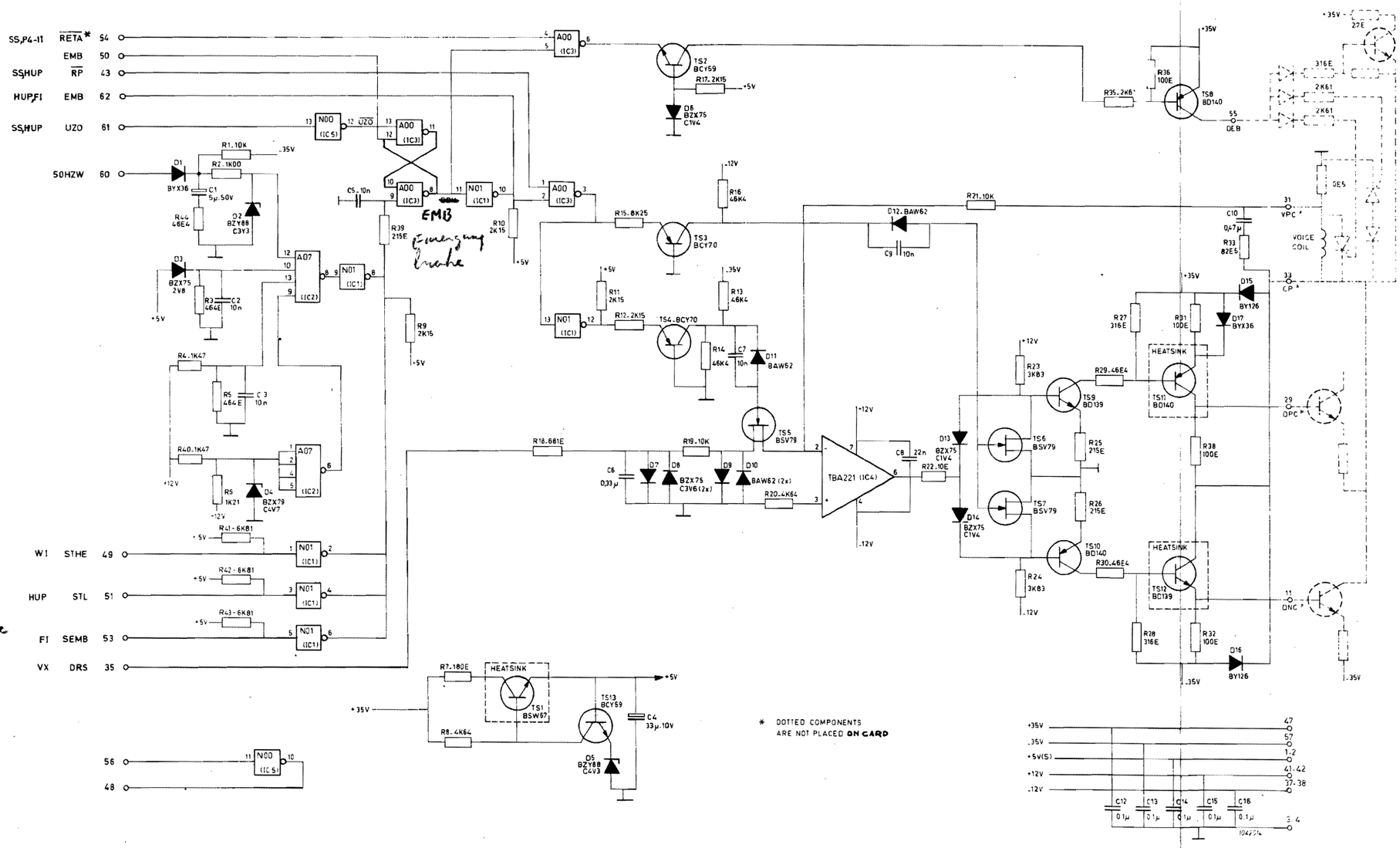

Figure 4-8 CARD PA 1A22

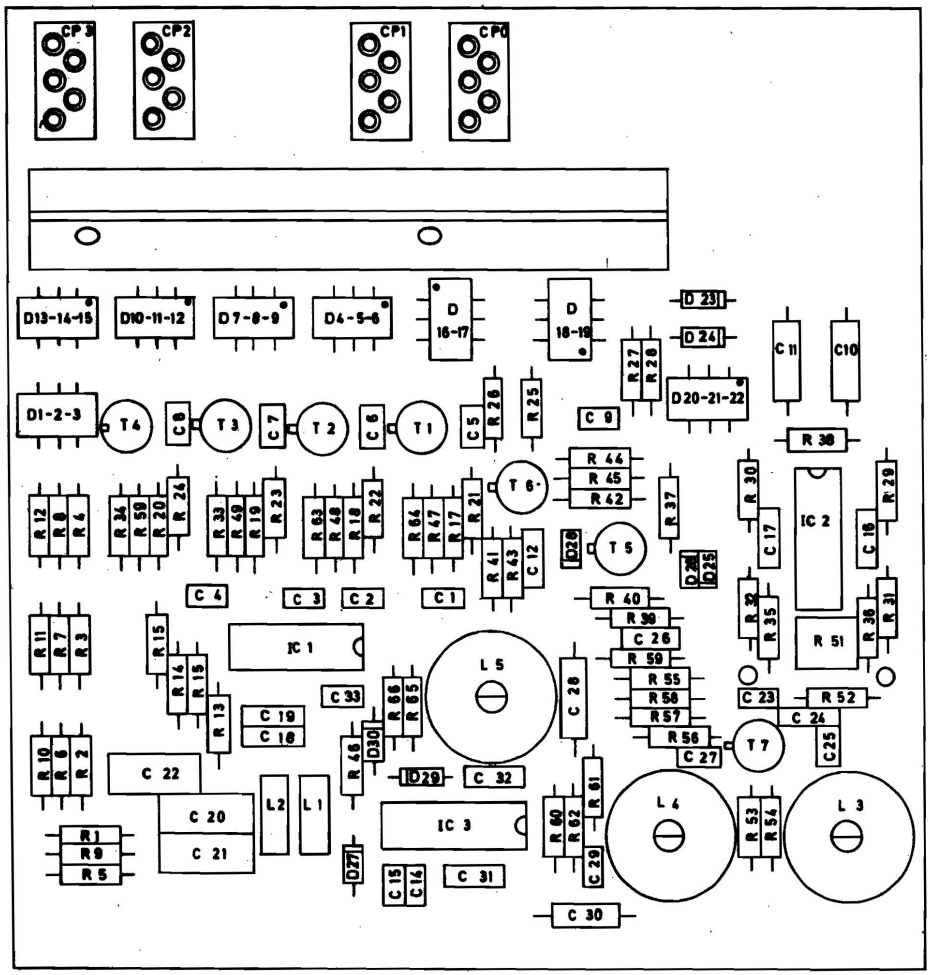

Figure 4-9A CARD RPA
COMPONENT SURVEY

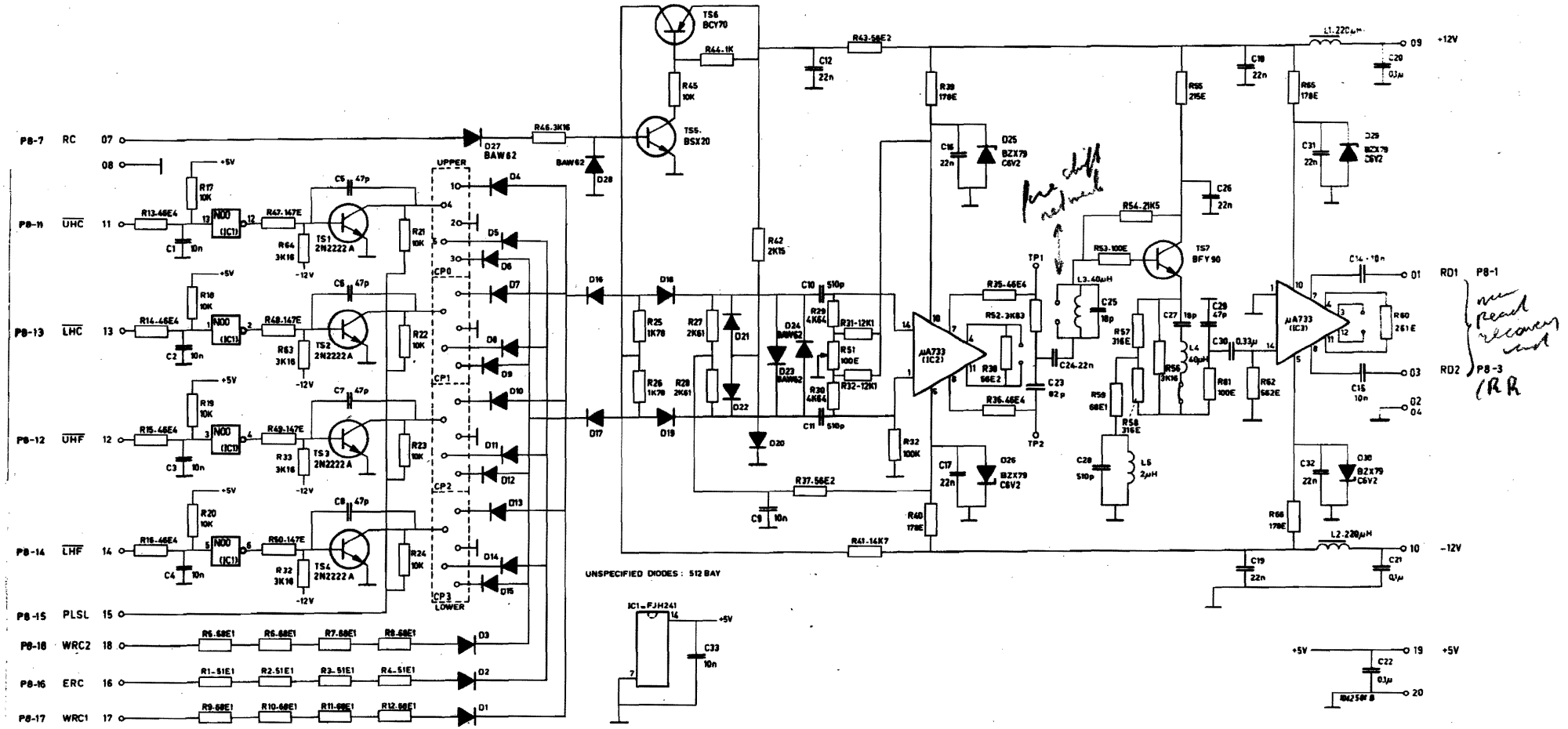

Figure 4-9 CARD RPA

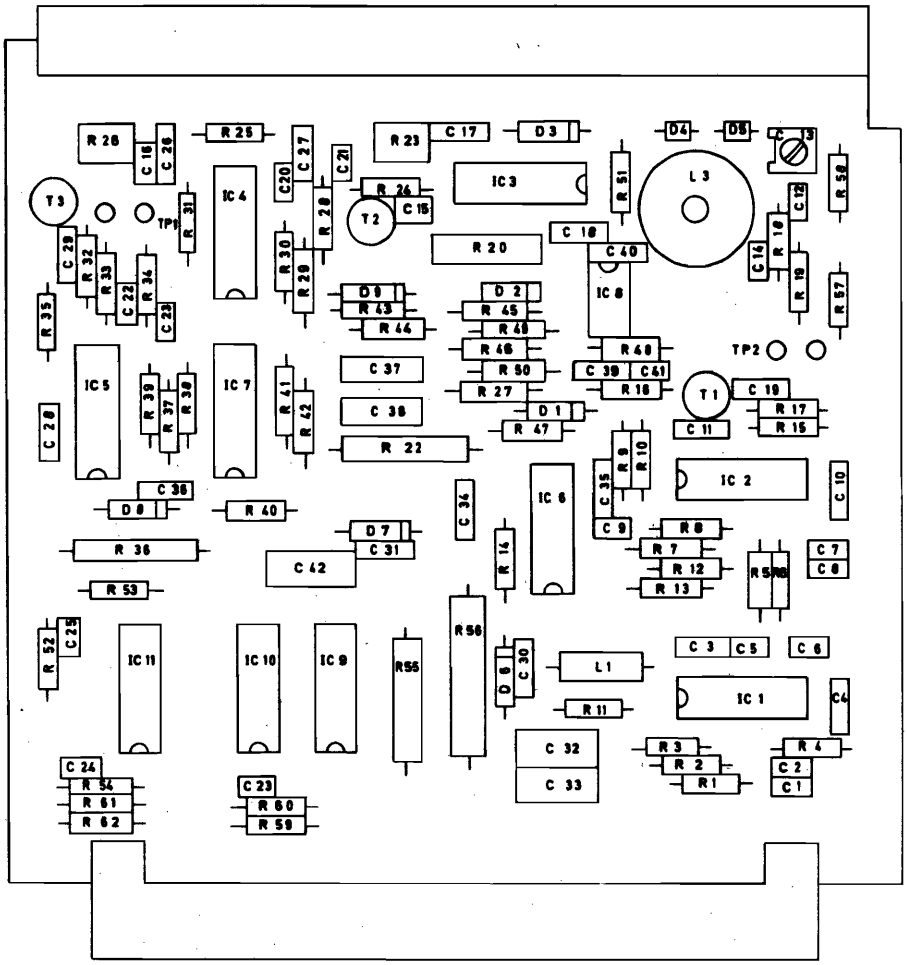

Figure 4-10A CARD R.R.
COMPONENT SURVEY

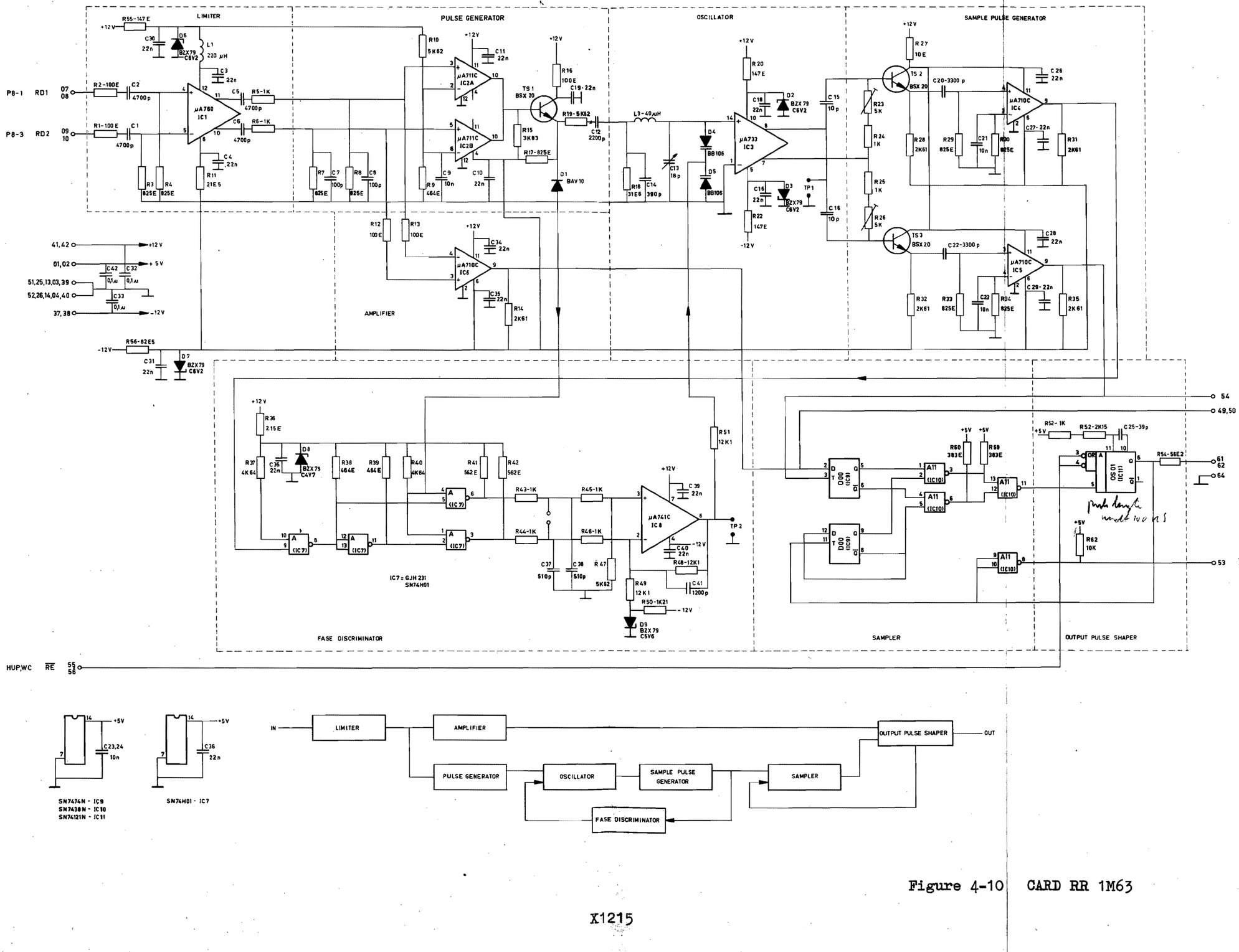

Figure 4-10 CARD RR 1M63

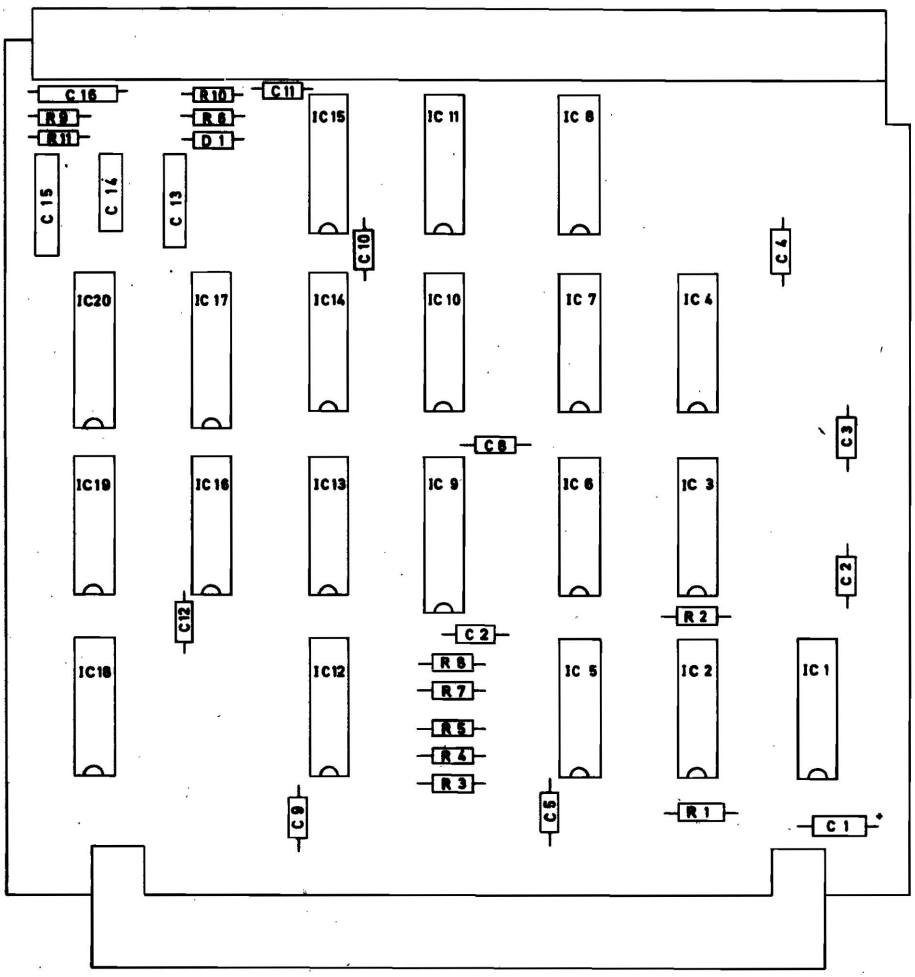

Figure 4-11A CARD SS
COMPONENT SURVEY

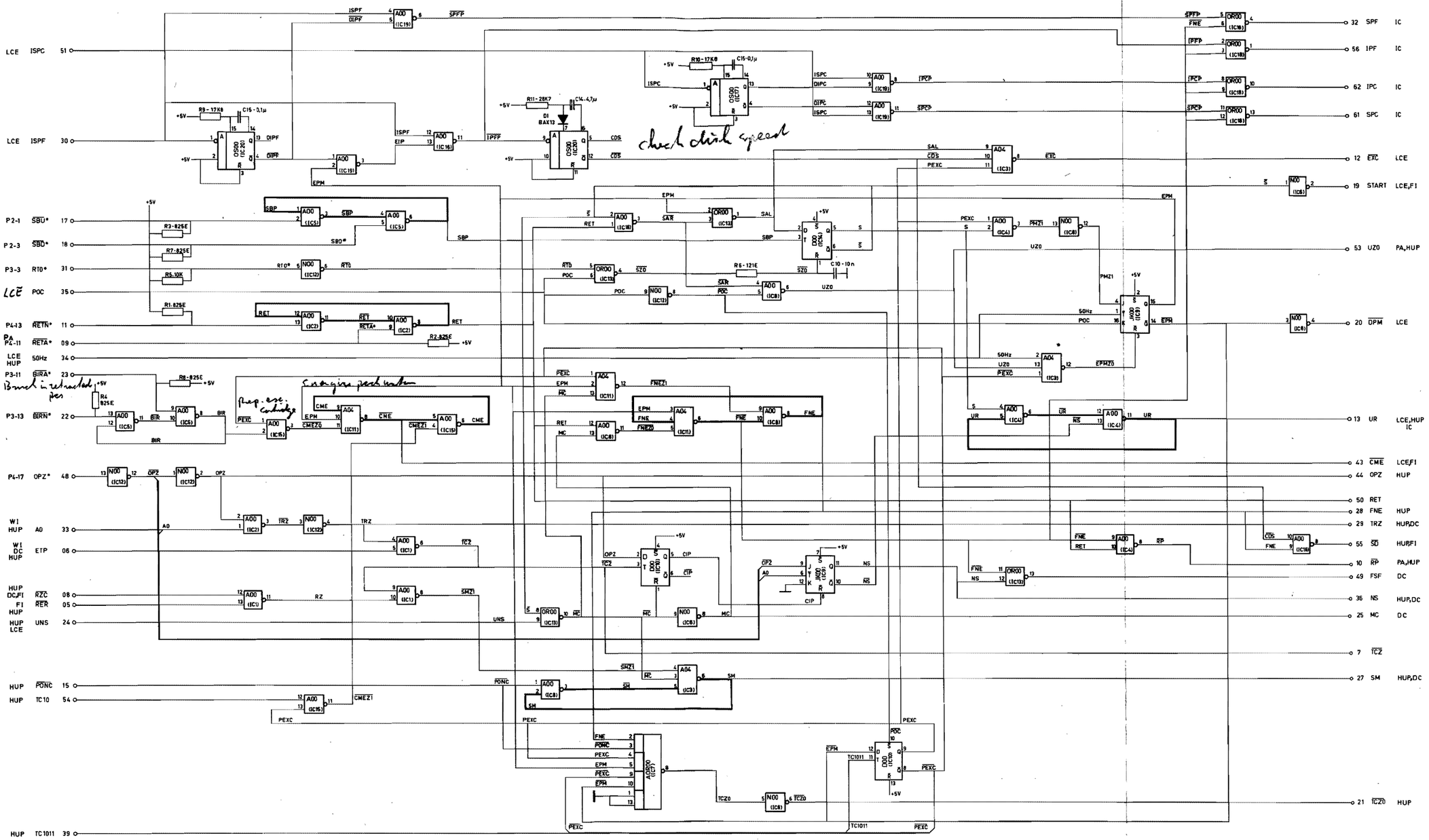

Figure 4-11 CARD SS 1L98

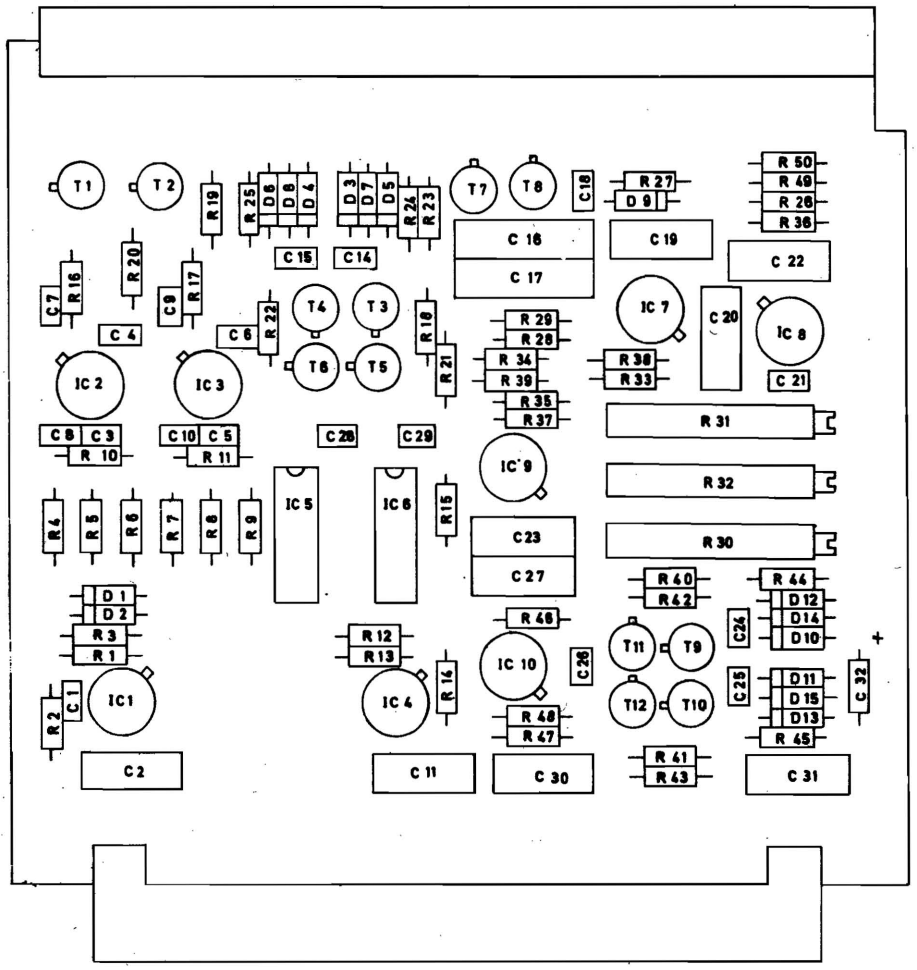

Figure 4-12A CARD VX
COMPONENT SURVEY

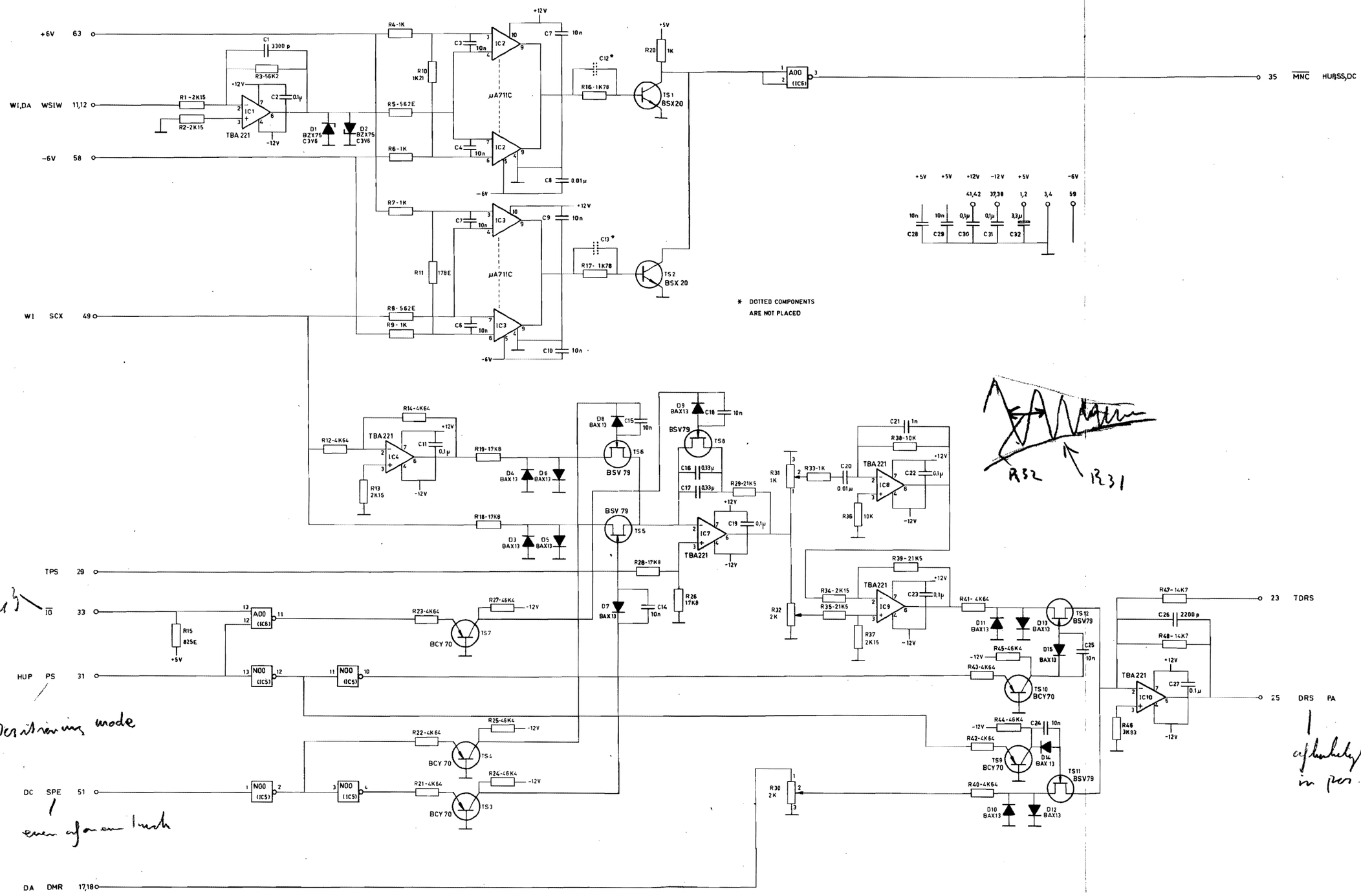

Figure 4-12 CARD VX 1M65

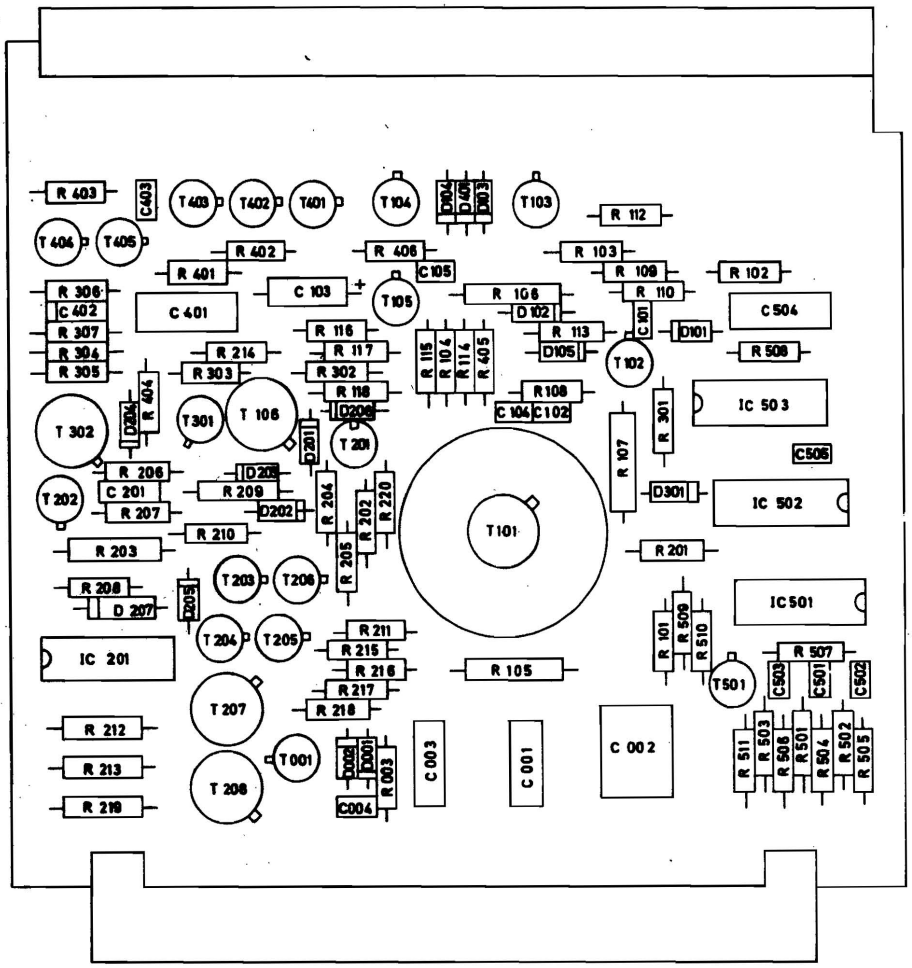

Figure 4-13A CARD WC
COMPONENT SURVEY

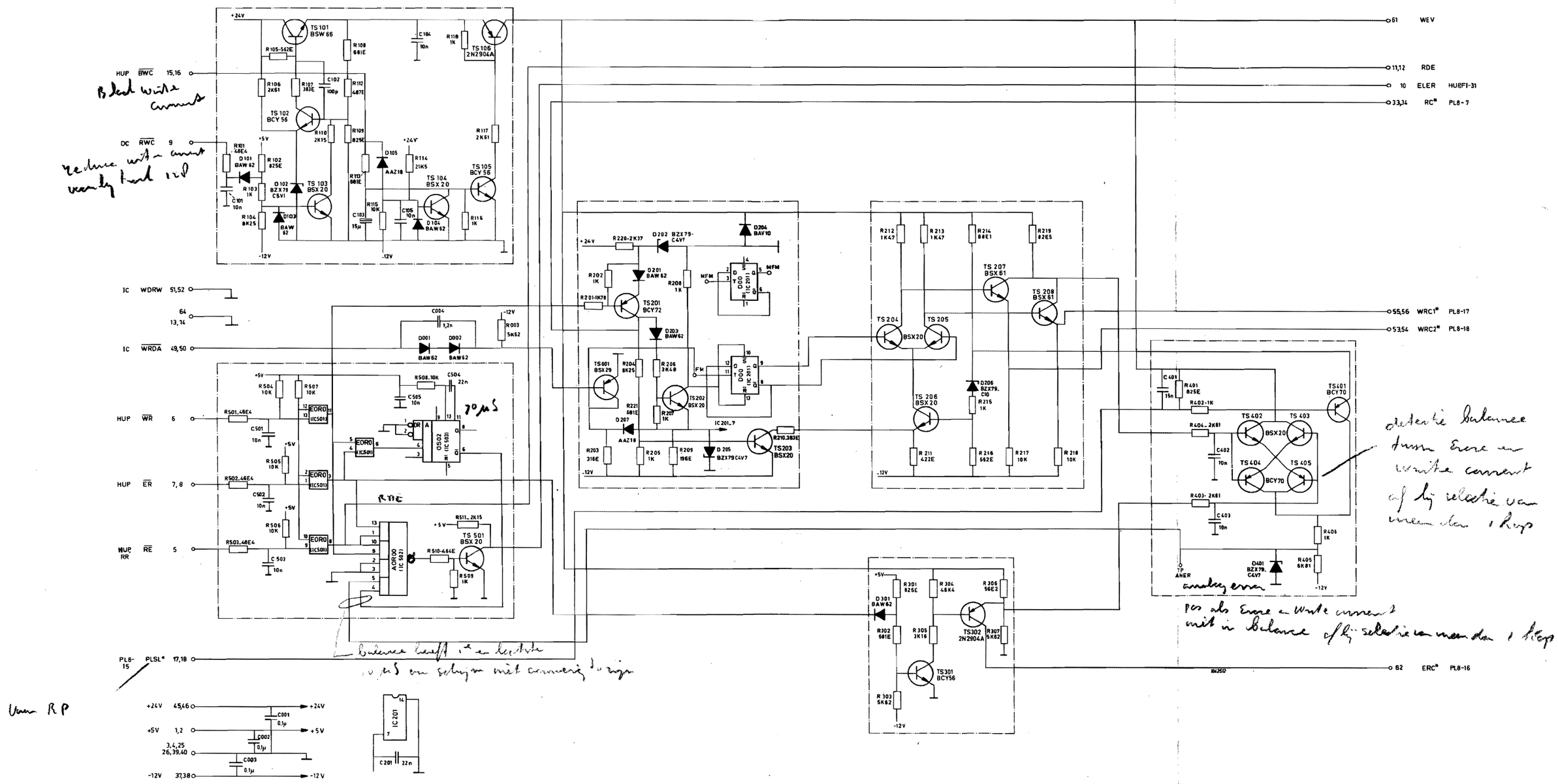

Figure 4-13 CARD WC 1A24

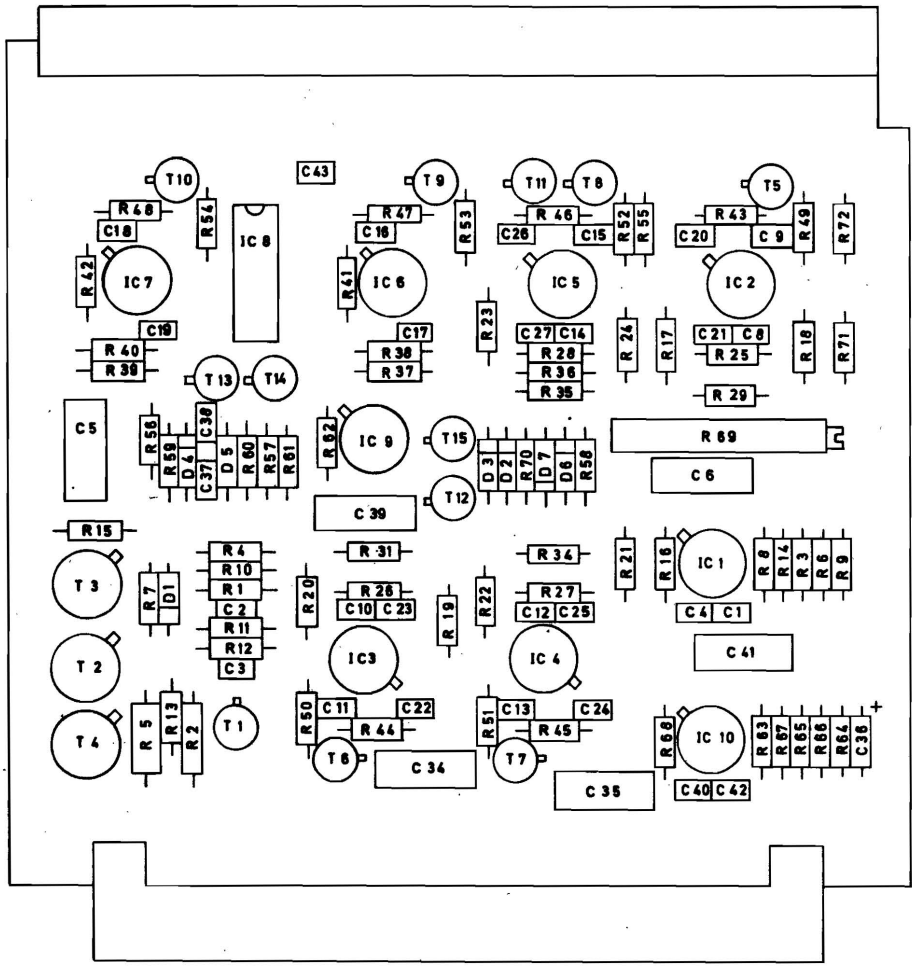

Figure 4-14A CARD WI
COMPONENT SURVEY

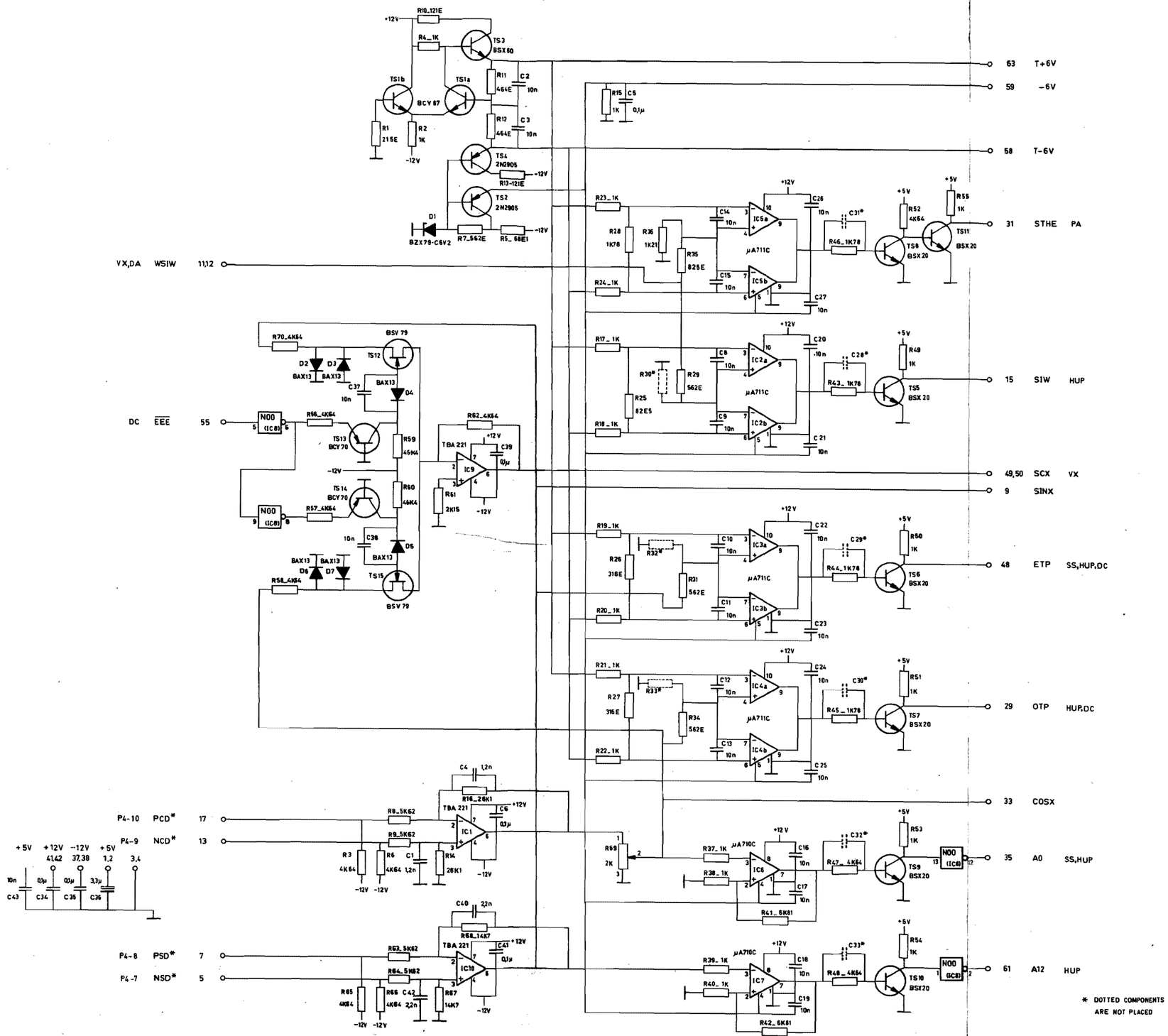

Figure 4-14 CARD WI 1M67

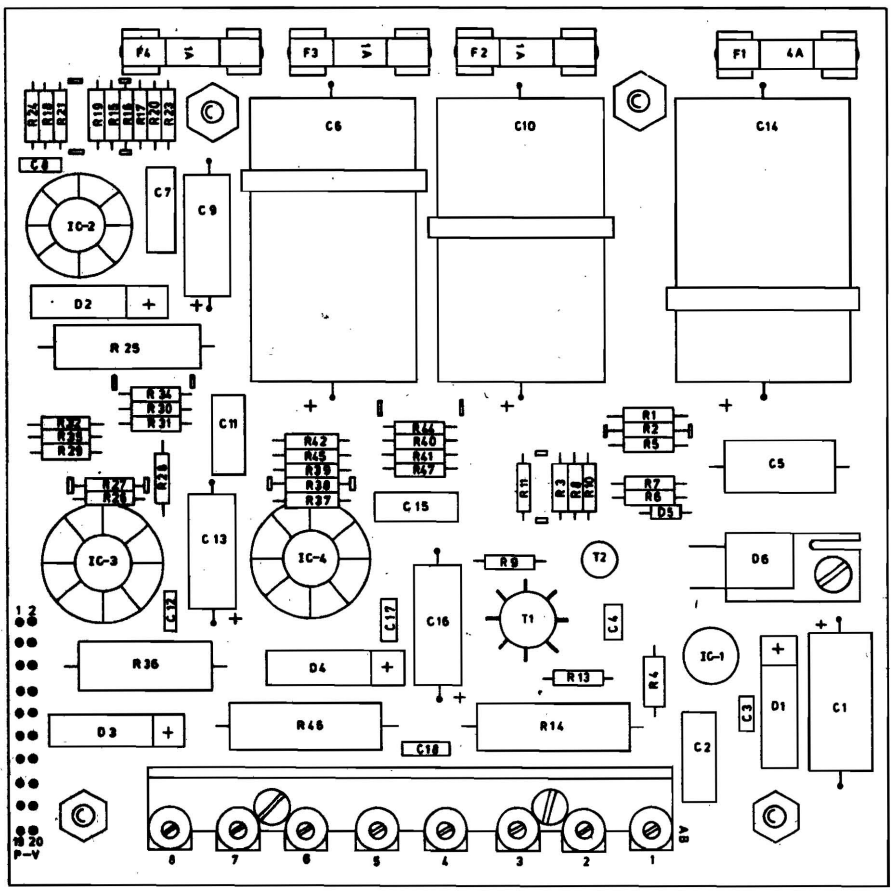

Figure 4-15A CARD POWER
COMPONENT SURVEY

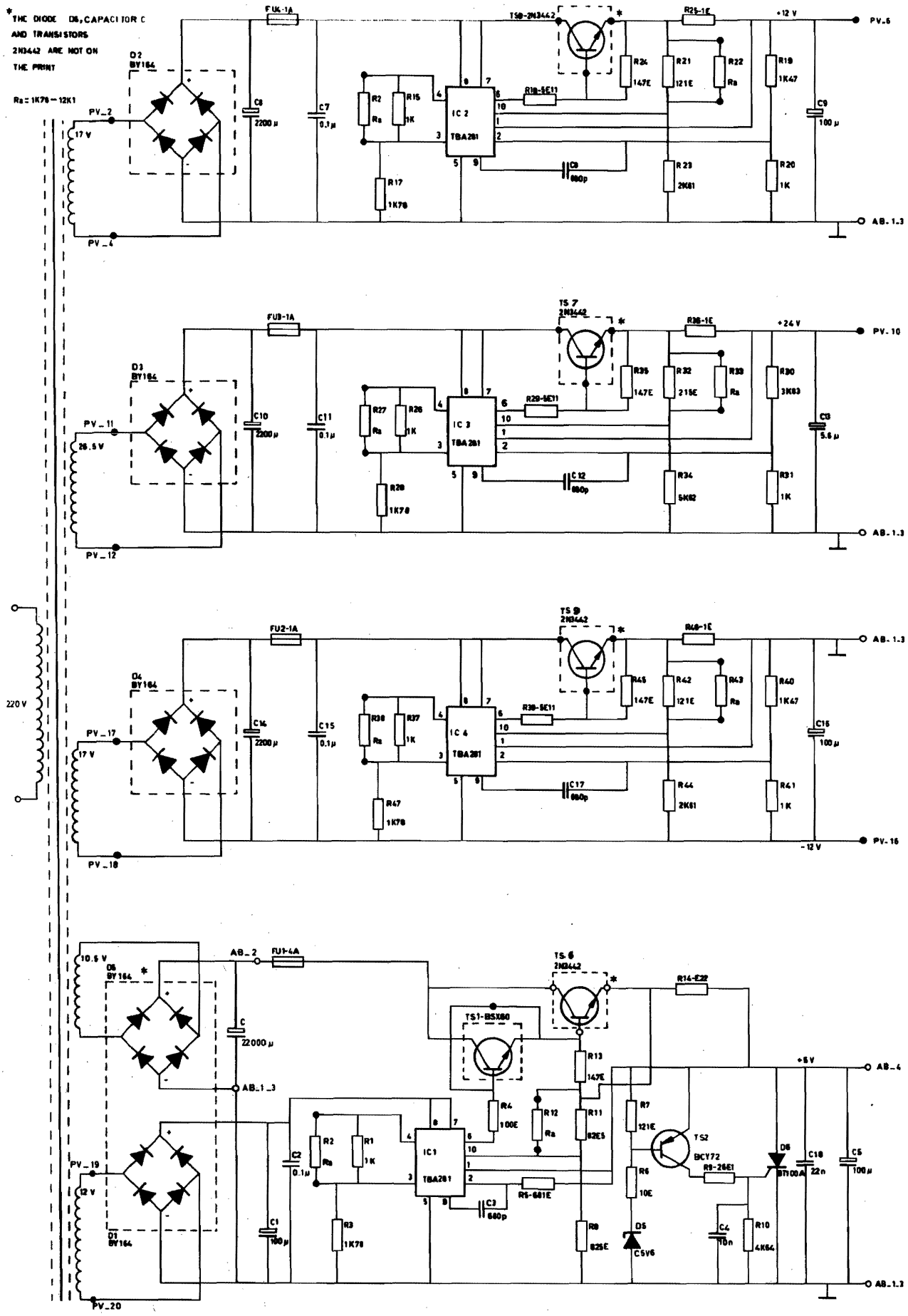

Figure 4-15 POWER CARD

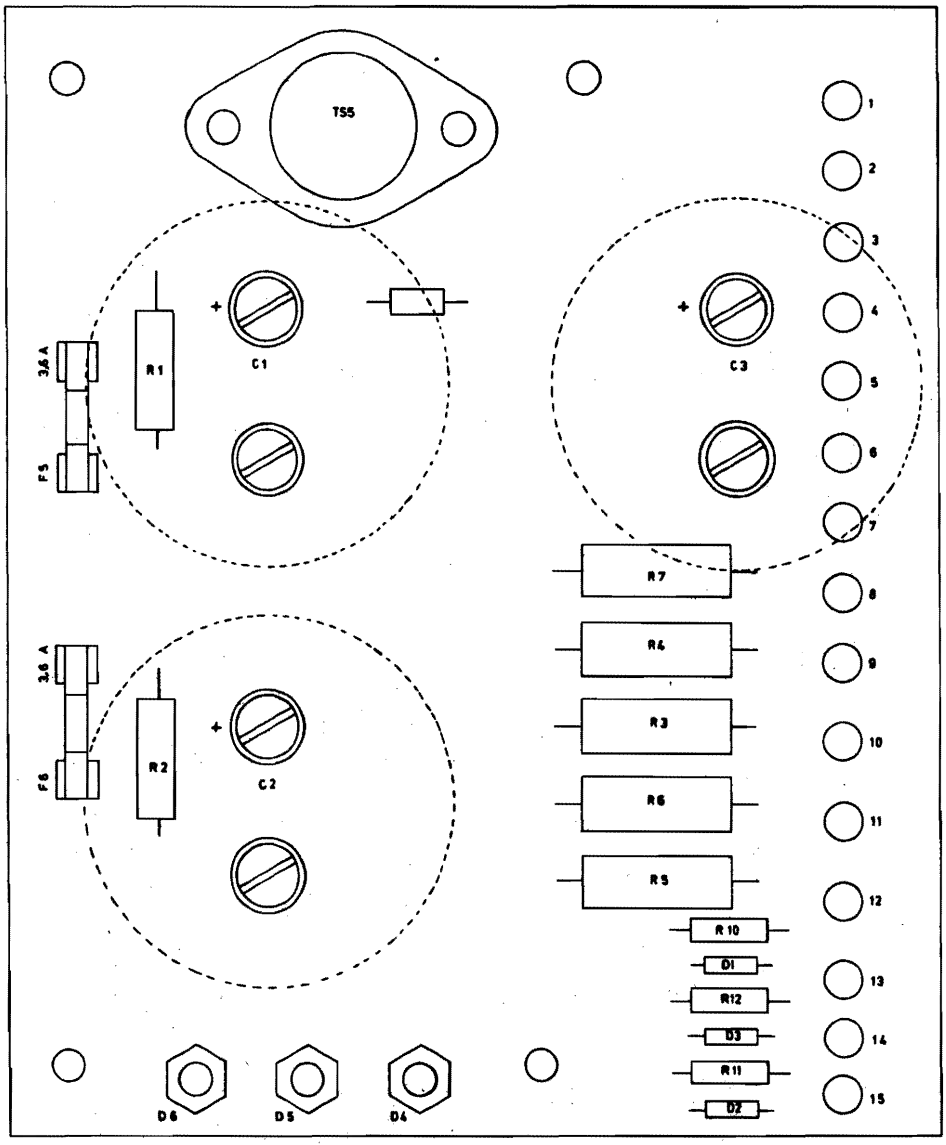

Figure 4-16A DRIVER PRINT
COMPONENT SURVEY

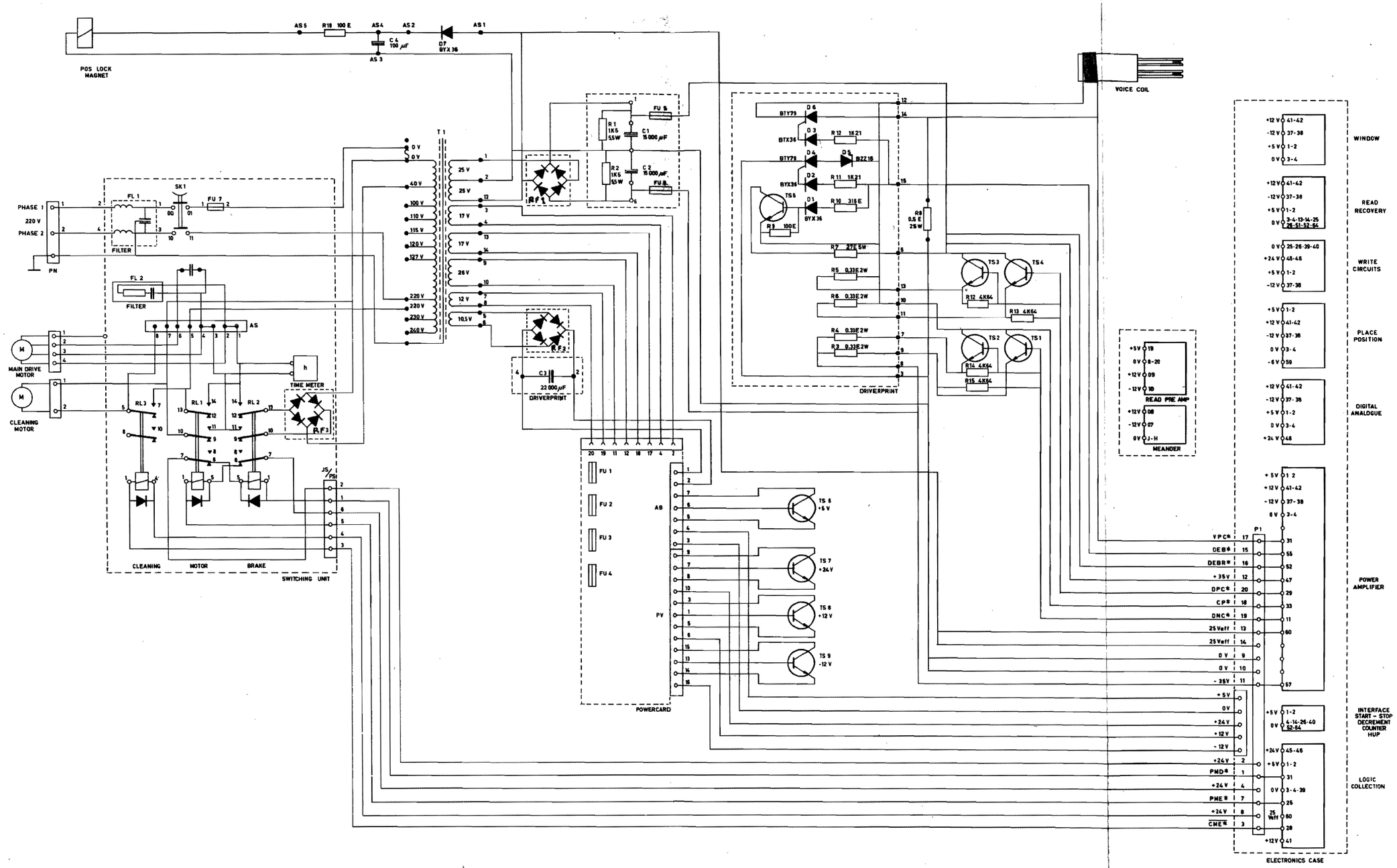

Figure 4-16 POWER SUPPLY AND DISTRIBUTION

X1215
Cartridge Disk Drive Unit
Vol. V: Electronics



Data Systems

1.1 LIMITER (figure 5-1)

A basic limiter circuit consists of two diodes connected as in the drawing.

A diode conducts when approximately 0.7 volts is present in the forward direction.
When the input voltage goes more positive than 0.7 volts, diode D2 conducts and when the voltage goes more negative than 0.7 volts, diode D1 conducts.
The output voltage is within the limits ± 0.7 volts.

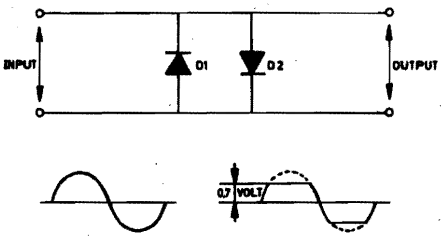

Fig. 5-1 Limiter

1.2 RELAY DRIVER (figure 5-2)

A logical '0' at the input switches off the transistor T1 and the collector voltage becomes positive.

This positive voltage primes the transistor T2.
If a relay is connected between the positive supply and the output, the relay will be energised.
The diode D1 protects the transistor T2.

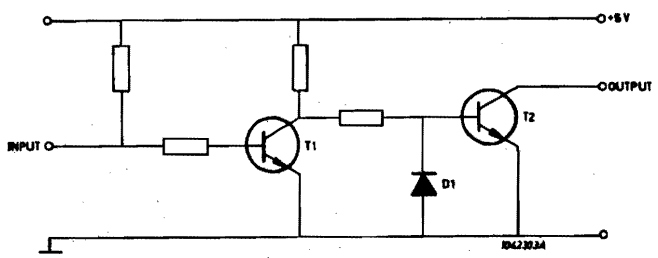

Fig. 5-2 Relay Driver

1.3 ELECTRONIC SWITCH (figure 5-3)

When a logical '0' is connected to the gate input of the circuit, the transistor T1 is switched off so that a negative voltage is present on collector. The F.E.T. (Field Effect Transistor) is not conducting, i.e. the input and output are isolated.

When a logical '1' is present on the gate input, the transistor T1 conducts as well as the F.E.T. The input and output are connected together via the F.E.T.

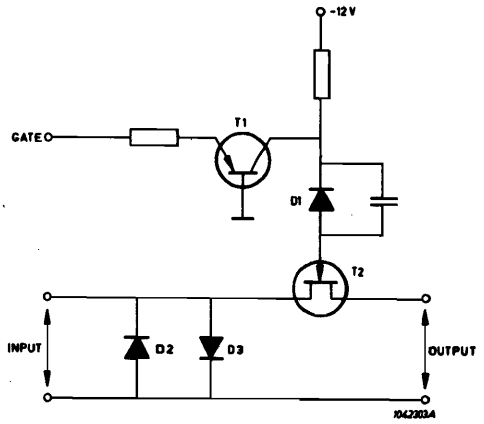

Fig. 5-3 Electronic Switch

1.4 DIFFERENTIAL AMPLIFIER (figure 5-4)

The differential amplifier is used in the CDD in a number of different ways, thus:

a) With a darlington pair configuration at the input, providing greater input impedance.

b) A transistor in the emitter circuit, realising a high impedance to earth. This provides for a better 'in-phase' suppression.

c) Normal mode.

As the basic principles apply to all three configurations, the normal mode circuit is described.
The reasons for using a differential amplifier are as follows:

(a) The circuit functions at a requisite voltage level which should not be amplified.
(b) To overcome external pick-up.
(c) When small supply voltage variations should not effectively influence the functioning of the circuit.

The functioning of the circuit shown is as follows:

If the input to the base of one transistor changes, the output voltage on the collector changes. However, the current change through the common emitter resistor R effectively changes the conditions to the other transistor, resulting in a change in the output voltage of that opposite to each other.
If both inputs change the same amount and in the same mode, no difference is detected between the output voltage on the two collectors.

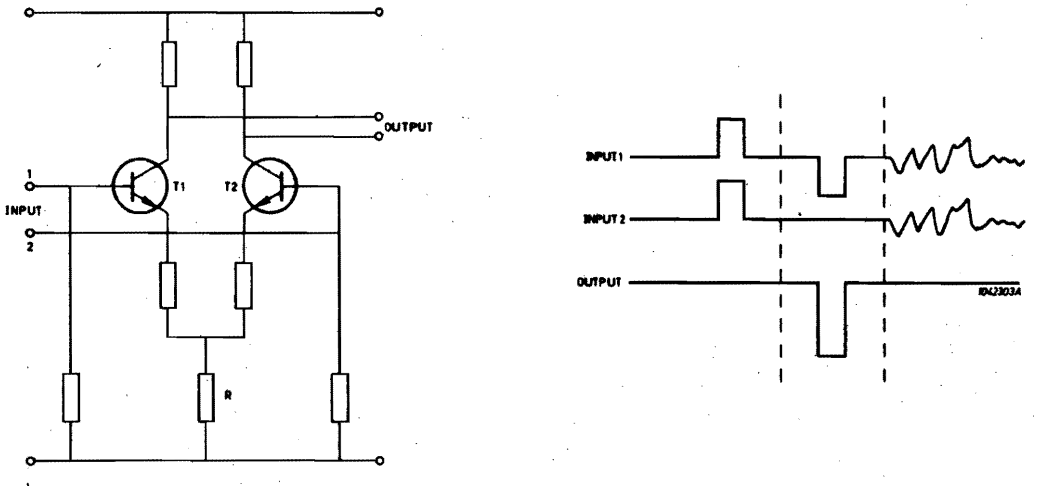

Fig. 5-4 Differential Amplifier

1.5 OPERATIONAL AMPLIFIER (figure 5-5)

The operational amplifier (op-amp) is an amplifier with a very high gain (10^6 x or higher).
An applied input voltage is consequently always amplified to the supply voltage if no special actions are taken.
A feed-back loop is introduced to limit the amplification. The op-amp is then used in a closed-loop amplification mode.
Three types of feed-back loops are used, resulting in the following modes:

Amplification Mode

A resistor is used as the feed-back element. The amplification is the result of the feed-back resistor R2 and the input resistor R1, thus:

$$\text{Amplification} = \frac{R2}{R1}$$

If the negative (-) input is used, inversion ensures through the device. No inversion takes place if the positive (+) input is used.

Integrator Mode

Using a capacitor as a feed-back element, an integrator circuit is realised. Small, long-lasting variations on the input are translated into large, short variations, giving rise to undamped oscillations.

Differentiator Mode

With a capacitor as the input (impedance) and a resistor as the feed-back element, a differentiator circuit is realised. Large, short variations are damped out.

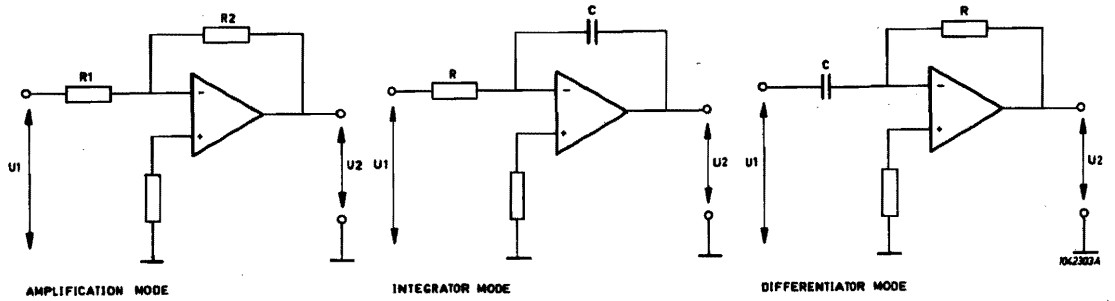

Fig. 5-5 Operational Amplifier

1.6 WINDOW CIRCUIT (Comparator) (figure 5-6)

This circuit contains two op-amps connected as shown in the diagram. When the voltage at point A is between - 0.6 V and + 0.6 V , the circuit is balanced, resulting in two equal but opposite voltages at the outputs of the op-amps. The resulting voltage will be zero, and the transistor will not be conducting.
The output voltage on the collector will be + 5V, which is a logical '1'. A voltage lower than - 0.6V or higher than + 0.6V at the input will unbalance the outputs of the op-amps, resulting in a positive voltage on the base of the transistor. The transistor then conducts and the output goes to a logical '0'.

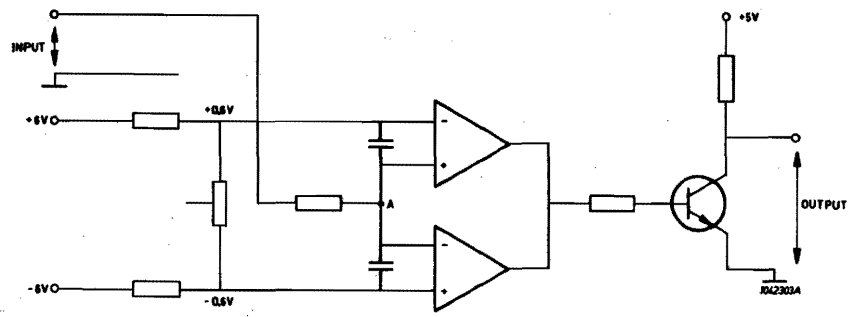

Fig. 5-6 Window Circuit

1-7 MEANDER CARD (Figure 4-7)

The coil L3 and the capacitor C4 form a tuned circuit and determine the frequency of oscillation.
This oscillating signal is used as follows:

a) By the power stage transistors T4 and T5, to produce a control signal via L5. This signal is presented to the primary meander on pins L and 10.

b) As a synchronous detection signal via transistor T3 and coil L4 to the demodulation stages, operational amplifier IC1 for the secondary meander A and operational amplifier IC2 for the secondary meander B.

A balanced detection signal from L4 and the information from the secondary meander are applied to the long-tailed pair, IC1 and IC2. The demodulated outputs of IC1 and IC2 are applied to transistors T2 and T6.
Transistors T2a and T6b always deliver the positive transitions of the sine wave.
Transistors T2b and T6a always deliver the negative transitions of the sine wave.
The resistors R16 and R28 make it possible to minimize the offset of the signals when no head movement is generated.

X1215

Cartridge Disk Drive Unit

Vol. VI: Mechanics



Data Systems

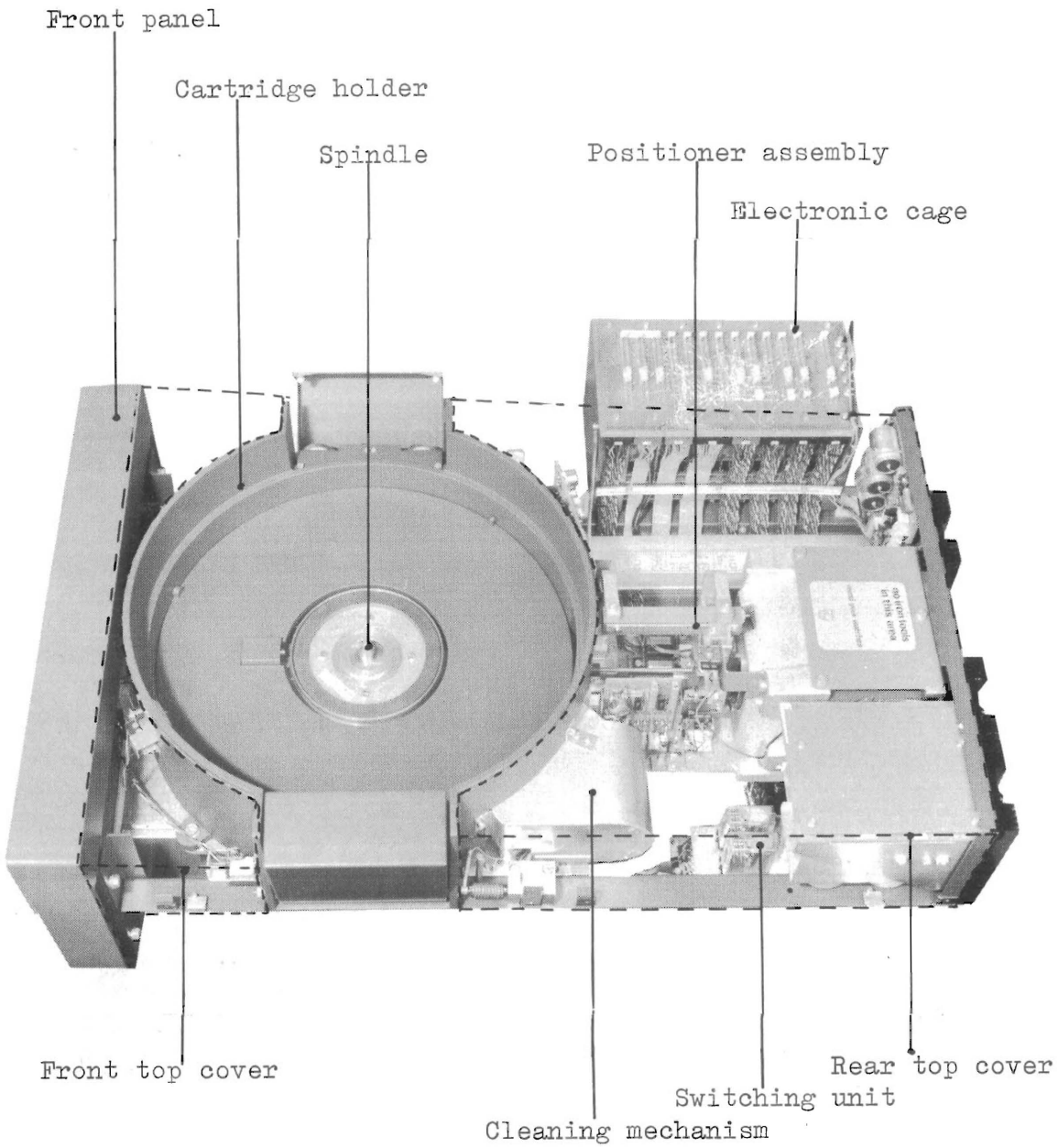
Front panel
Cartridge holder
Spindle
Positioner assembly
Electronic cage
Front top cover
Cleaning mechanism
Switching unit
Rear top cover

Figure 6-1

The basic structure of the CDD Disk Drive Unit is a T-shaped aluminium basic plate which is spring-mounted on a metal frame. On the base plate are mounted the spindle, the positioner mechanism,the index/sector transducers, the spindle drive motor and the cartridge holder. The base plate precisely aligns the components, providing mechanical stability for compatible recording.
In the metal frame are mounted the power, supply the switching unit, the cleaning mechanism, the electronic cage and the base plate.
The Disk Drive Unit is completed with the top covers, bottom cover and front panel.

The enclosure of the CDD is divided into five parts. The reasons are to prevent entry of dust into the machine and to make a number of compartments to effectively control the clean air flow in the machine.
The front panel covers the front side. This panel is removable (figure 6-1) so as to allow access to the air filters.
The rear of the disk drive is covered by a vertical casting on which are mounted the heat sinks of the power supply and power amplifier. The bottom is covered by the bottom cover. The plate can be removed by unscrewing the four screws.
The top is covered by two covers; the smaller of the two is called the front top cover, the other is called the rear top cover. The front top cover may be removed by unscrewing two bolts, and the rear top cover by unscrewing four bolts. All six bolts are located in the sides of the CDD.

The CDD is designed to fit into a 19 inches wide and 30 inches deep rack. Necessary items are telescopic slides and a cable guide. The drive may also be installed in a stand-alone cabinet. In this case, it is advisable that a removable cover is introduced above the cartridge holder to prevent entry of dust into the recording area. See also Vol. X Installation.

The drive may be installed in a standard rack.

The Switching Unit, which is situated in the rear of the Disk Drive Unit contains:

a) Three relays.
b) A time elapsed meter.
c) Fuse and fuse holder.
d) Mains filter.
e) Two starting capacitors for the drive motor of the spindle.
f) Suppression filter for the drive motor of the spindle.
g) Power on/off switch.
h) Rectifier for the brake voltage.

The first relay serves to energise the cleaning motor and switches on an extra starting capacitor. The second relay serves to energise the spindle motor, at the same time de-energising the third relay which connects the electrical brake to the spindle motor.
When the third relay is energised, and the spindle motor is thus braking electrically, the second relay is de-energised.

The fresh air cooling system comprises an impellor fan which is fitted to the spindle and two filters. Air is drawn into the unit through an inlet in the underside of the front panel. The air passes through a coarse filter, and then through a fine filter. The air is then drawn into the cartridge and the fixed disk area. After cooling the disk area, the positioner voice coil, the electronics and power supply, the air finally exists the unit through openings in the dust cover.
However, for complete safety, each time a cartridge is loaded and the drive is started, a cleaning cycle is undertaken. This is done by a cleaning mechanism which consists of four brushes driven by a cleaning motor. $2\frac{1}{2}$ seconds after the disk drive unit is started, the cleaning motor starts swinging the brushes into the cartridge and over the fixed disk and then back to the rest position, slowly sweeping them across the rotating recording surfaces.
Any undesirable particles present are dislodged from the surfaces and blown away by the clean air blow.

The cartridge holder is fixed to the base plate by three bolts, and is accessible when the drive is pulled out of the rack.
Four notches in the circumference of the cartridge correspond with four cams on the inside of the cartridge holder.
Only one position of the cartridge, with respect to the disk drive is possible.
Two clamps, fitted on the cartridge holder, push the cartridge to the cartridge when they are closed.

7. SPINDLE MECHANISM

The spindle assembly provides the mechanical coupling between the recording disks and the drive motor. The fixed disk is directly mounted on the spindle hub. The cartridge disk engages the spindle only when the cartridge is fully seated in the drive unit. The coupling is accomplished by means of a spindle mounted magnetic ring and an armature plate fastened to the cartridge disk.
A conical top on the spindle centre engages an identically machined opening in the centre of the cartridge disk and thereby aligns the disk accurately on the spindle hub. The spindle hub also carries the fixed disk sector ring.
The spindle is coupled to the spindle motor via a belt.
The spindle incorporates a metal disk with blades, which, when the spindle is rotating, sucks external air via two filters. This air is used for cooling purposes. The spindle is earthed to eliminate static electricity acquired by the movement of the spindle. The spindle assembly is fixed to the T-shaped frame with three Allen screws.

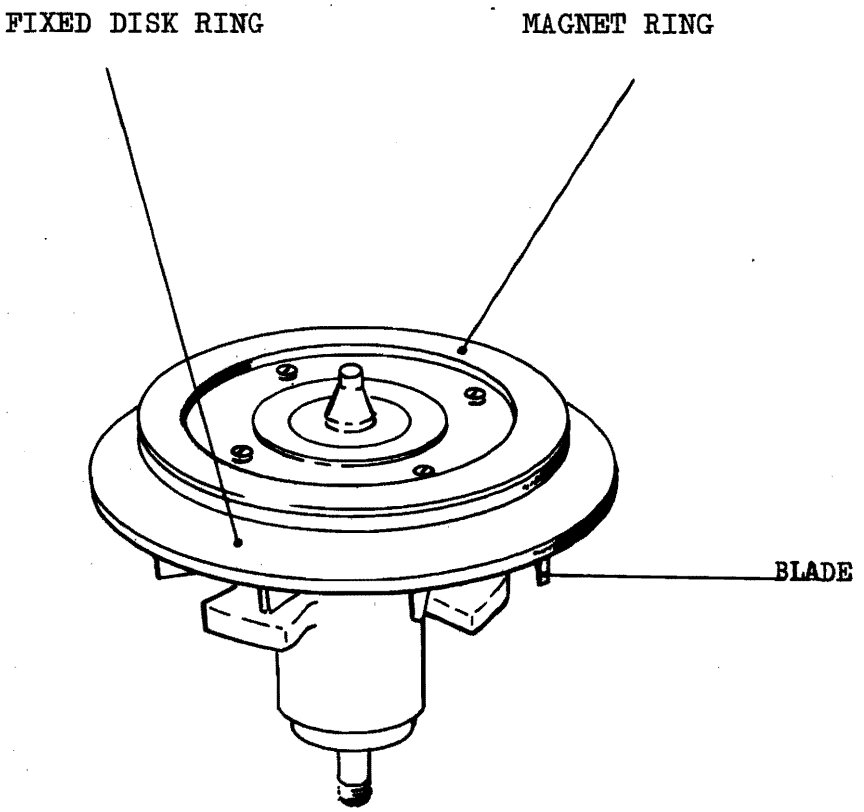

Figure 6-2 SPINDLE

The positioner loads and unloads the read/write heads and drives the heads to the correct position on the disks.
The four heads are mounted on a carriage that runs on guides, in and out of an assembly secured to the base plate. A voice coil attached to the carriage travels through an air gap in a large permanent-magnet, pole piece housed in the fixed part of the mechanism and this forms the means where-by the carriage is propelled in either direction:
By sending a current through the voice coil in one direction, the carriage is propelled in one direction. When reversing the current the carriage propelling force is reversed.
To monitor the speed of the positioner, a speed transducer is mounted on the positioner. The speed transducer consists of a coil in which a magnetic rod moves.
The position detector, used to count the number of tracks which are passed during a seek, is called the meander and consists of two parts, namely:

a) The primary meander mounted on the moving part of the positioner.
b) The secondary meander mounted on the base plate.

The magnet housing is also mounted on the base plate.

The electronic cage contains the logics, the servo-electronics, the read/write electronics (partly) and interface circuits.
Connections between the several cards in the electronic cage are made on a back panel by means of printed tracks and wire-wrap connections.
On one side of the back panel, the electronics are connected, via plugs, to the various parts of the disk drive unit and to the control unit. These plugs are removable.
The electronic cage can be swung out for service purposes.
On the back panel, card names and numbers as well as pin numbers, are indicated as much as possible.

X1215

Cartridge Disk Drive Unit

Vol. VII: Maintenance

PHILIPS Data Systems

1.1 GENERAL

The performance of the Cartridge Disk Drive depends on a carefully planned and properly executed program of preventive and corrective maintenance.
The program, if followed, will ensure optimal performance and maximum 'device up' time.
The scheduled maintenance of the device is based on hours, indicated by the elapsed-time meter which can only be viewed from the rear, and on normal office environment on a one shift base an abnormally dirty environment may dictate increased preventive maintenance.
Three levels of scheduled maintenance exist :

a) 1000-Hour or six month scheduled maintenance
b) 2000-Hour or 12 month scheduled maintenance
c) 4000-Hour or 24 month scheduled maintenance.

However, it is advisable to perform a maintenance check the first 500 hours or three months.

1.2 SPECIAL TOOLS

Drive belt adjustment tool
Exerciser XMX 1418
Extender card
Jumper wires
CE cartridge
Head removal and replacement tool
Head alignment and adjustment tool
Torque wrench 7 kg/cm (M3 socket screw)
Berg handtool HT-80
CE write protection card
Servicing disk-pack
Index unit adjustment tool
Optical zero adjustment tool
Tool case
Fault indicator 2L54 (if not installed)

1.3. MATERIALS

Isopropyl alcohol	1322 505 69201
Wad tip-Q-sticks	5122 010 20921
Lint-free dry cloth (Scotch wiper)	5122 010 20911
CAB foil 0.08 mm	
Wooden spatulas	2822 060 15456
Drive belt	
Earthing contact	

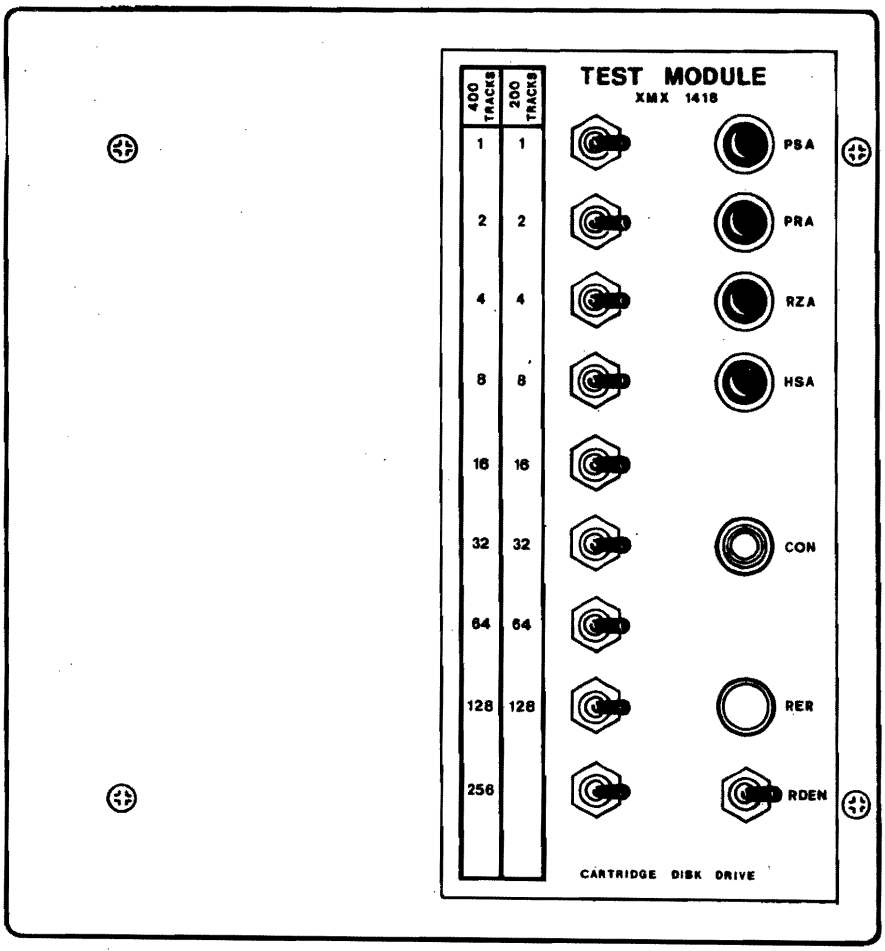
TEST MODULE
XMX 1418
400 TRACKS
200 TRACKS
1
1
2
2
4
4
8
8
16
16
32
32
64
64
128
128
256
PSA
PRA
RZA
HSA
CON
RER
RDEN
CARTRIDGE DISK DRIVE

Fig. 7-1

1.4 EXERCISER fig. 7-1

The Exerciser is provided for use by a service engineer to enable him to instruct the CDD, in moving the heads to a selected cylinder address, or between two selected cylinder addresses, to select one of the four heads, to make a read enable.

Switches and Indicators

The left row consists of nine toggle switches known as track-switches which are identified 1, 2, 4, 8, 16, 32, 64, 128 for 200 tracks and 1, 2, 4, 8, 16, 32, 64, 128, 256 for 400 tracks.
The right row consists of 4 push buttons, two indicators, and one toggle switch.
The four push buttons are identified by.
PSA : Position Single activated

PRA : Position Repeat activated

RZA : Return to zero activated

HSA : Head Select activated

The two indicators are identified by
CON : ON cylinder

RER : Recoverable seek Error

And the toggle switch is called
RDEN : Read enable

Use of the Exerciser

1. Connect the plug of the test module to interface socket of the CDD.
2. Switch on the power at the rear of the disk unit, the cartridge exchange lamp and power on are lit, and insert the cartridge into the correct position.
3. Press the Start/Stop button.
4. Wait until the Unit Ready indicator is lit
5. The unit is ready to accept signals from the test module.

1.5 EXERCISER operation

a. <u>Direct seek :</u>

1. Set cylinder address in switches
2. Press the button PSA, the positioner moves to the selected address

b. Return to zero seek.

1. Press the button RZA, the positioner moves to cylinder zero.

c. Repeat.

1. Set first cylinder address on switches.
2. Press button PSA, the positioner moves to the desired address.
3. Set second cylinder address on switches.
4. Press button PRA, the positioner moves now repeately between the selected cylinder addresses.
5. To stop the positioner, press PRA and the positioner will stop on the first cylinder address or on cylinder zero.

d. Head selection.

Set in the two left switches (1 and 2) the number of the selected head. (see below)

Switch 1	Switch 2	Head
left	left	0
right	left	1
left	right	2
right	right	3

Press button HSA, the selected head will now read, the information, of the track on which the positioner was send, before the head selection. When the toggle switch RDEN is active it is possible to test the whole read channel up till the interface.

2.1 SCHEDULED MAINTENANCE (1000 hours and FIRST 500 hours)

Engineer :

Installation :

Data :

Unit serial number :

Work time :

Running time meter :

Use Maintenance book no. 5122 992 00961	Page	Tech tip	Result
1. Inspect the heads. Use a dental mirror and a bright light. If a head has been repeatedly contacting a surface, it must be replaced. Do not touch the heads with the mirror.			
2. If necessary, clean the heads with a spatule wrapped in a Scotch wiper dampened with Isopropyl Alcohol (1322 505 69201). Use a dry wiper to dry the heads.			
3. Clean the cartridge holder. A lint free dust cloth must be used. The cartridge should fit easily in position. Ensure that no loose particles are left behind when the cleaning has been completed.			
4. Check the cleaning brushes. If there are less than 10 bristles per brush, change the brush assembly. Was it necessary to change it ?			yes/no
5. Inspect the spindle motor drive belt. Was the drive belt worn ?			yes/no
Was the drive belt slack?(If necessary adjust it.)			yes/no
6. Inspect and clean the positioner. Are the rollers and guides clean ? If not, clean with a dry Scotch wiper.			yes/no
7. Clean the magnetic chuck and spindle cone with a Scotch wiper and alcohol. Use adhesive tape to pick up any loose particles.			

Use Maintenance book no. 5122 992 00961	Page	Tech tip	Result
8. Replace the fine and coarse filter (only for 1000 hour scheduled maintenance). Caution : When fitting the fine filter, make sure that the air flow is in the correct direction (watch the arrow) and do not remove the packing earlier than necessary. 9. Check the steel wire with which the clamps retracts the brushes. 10. Run the test program. Program executed. Note : It is recommended to clean the cone locating hole of the cartridges with a Q-stick.			yes/no

2.2 SCHEDULED MAINTENANCE (2000 hours and 4000 hours)

Engineer : Installation :

Data : Unit serial number :

Work time : Running time meter :

Use Maintenance book no. 5122 992 00961	Pag	Tech tip	Result
1. Inspect the heads. Use a dental mirror and a bright light. If a head has been repeatedly contacting a surface, it must be replaced. Do not touch the heads with the mirror.			
2. If necessary, clean the heads with a spatula wrapped in a Scotch wiper dampened with Isopropyl alcohol (1322 505 69201). Use a dry wiper to dry the heads. Do not touch or breathe on the heads. Do not soak the heads with excess Isopropyl alcohol.			
3. Clean the cartridge holde. A lintfree dust cloth must be used. The cartridge should fit easily in position. Ensure that no loose particles are left behind when the cleaning has been completed.			
4. Check the cleaning brushes. If there are less than 10 bristles per brush, change the brush assembly. Was it necessary to change it ?			yes/no
5. Replace the spindle motor drive belt (only for the 4000 or two years maintenance).			
6. Replace the spindle earthing contact.			
7. Inspect and clean the positioner. Are the rollers and guides clean ? If not, clean with a dry Scotch wiper.			yes/no

Use Maintenance book no. 5122 992 00961	Page	Tech tip	Result
8. Clean the magnetic chuck and spindle cone with a Scotch wiper and alcohol. Use adhesive tape to pick up any loose particles. 9. Replace the fine and coarse filters. Caution : When fitting the fine filter make sure that the airflow is in the correct direction (watch the arrow). Do not remove the packing earlier than necessary. Check the steel wire with which the clamps retracts the brushes. 11. Run the test program. Program executed. Note : It is recommended to clean the cone locating hole of the cartridges with a Q-stick.			yes/no

General.

The adjustments necessary to ensure the satisfactory functioning of the Cartridge Disk Drive (CDD) are described in this section. When an item has been replaced, an adjustment is nearly always necessary so section 4 of this volume should be used in conjunction with this section.
It should be noted that no supply voltage adjustments can be performed.
A multimeter (type PM 2411/04), an oscilloscope (type PM 3250 or 3330), and a Servo Test Card are required.

3.1 MICRO-SWITCHES

The following micro-switches do not require adjustments:

a) The cartridge on switch.

b) The pack switch.

c) The two clamp switches.

3.1.1 Cleaning Cycle Micro-switch Adjustment

The adjustment of the rest position of the cleaning brushes can be performed by turning the cam situated on the brush arm. The cam must be turned so that the micro-switch contacts open at the moment the brushes move outside the cartridge holder ring.
The arm, with its associated brushes, can be turned by hand.
A multimeter must be connected across the normally closed contacts to check the micro-switch action.

3.2

Adjustment in Y and Z-direction of the secundary meander block.

N.B. When possible this adjustment should be carried out with the heads removed.

3.2.1 Adjustment in Y-direction

1) Take away the fuses F5 and F6 on the driver card. (Now the voice-coil is disconnected from the +35 V and -35 V)

2) Switch the power on.

3) Put a cartridge in the disk unit.

4) Press the start/stop button and wait until the disks are in nominal speed.

5) Move the positioner inwards by hand so that the primary meander is in front of the secundary meander.

6) Monitor the signal SINX on card WI pin 9. The top to top value of this signal must be between 7,5 V and 8,5 V, when moving the positioner between track 000 and track 200. A second examination is, that the largest top to top value should not be more than 110% of the smallest top to top value of the SINX signal.
When the SINX signal is to large, the distance between primary and secundary meander has to be enlarged by moving the secundary meander block. When the signal is to small the distance has to be reduced.
A protective sheet of 80 µm approximately must be placed between the meanders, thus preventing the meanders are damaged.

3.2.2 Adjustment in Z-direction

After adjusting the meander block in the Y-direction, the block has to be fixed again to the base plate.
For adjustment in Z-direction, the signals SINX on card WI pin 9 and COSX on card WI pin 33 must be monitored.
By means of the screws G and K the secundary meander can be adjusted in the Z-direction.
The adjustment should be such that the zero-crossings of the SINX signal correspond with the tops of the COSX signal.

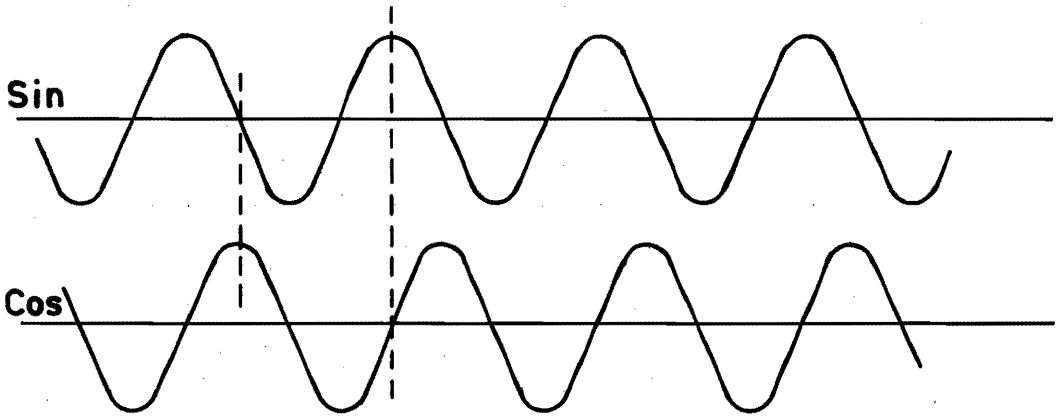

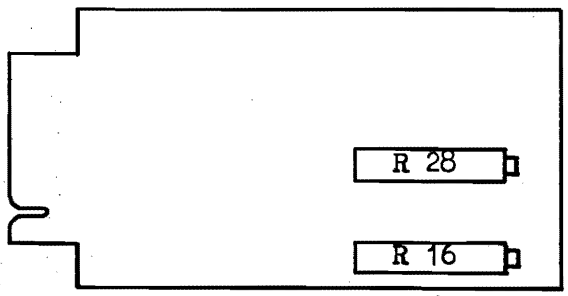

Fig 7-2 Meander Card

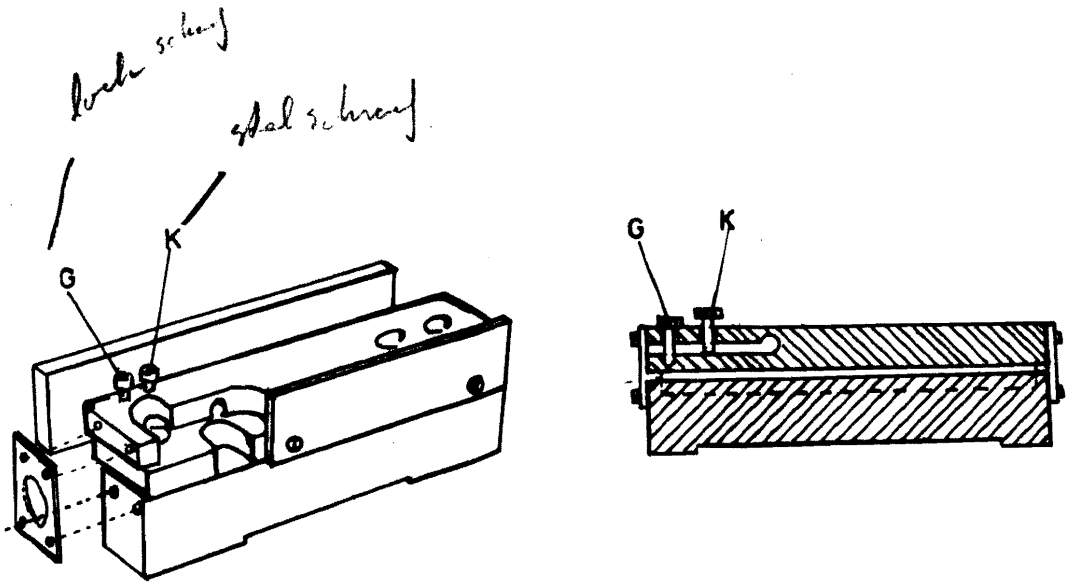

Fig 7-3 Meander block

3.3 ADJUSTMENT OF THE MEANDER CARD POTENTIOMETERS

a) Switch the power on.
b) Make sure the positioner is in the retracted position.
c) Measure between pin 9 of card WI (signal SINX) and earth. The voltage difference has to be less than 50 mV. If it is not, turn the potentiometer R16 until it is less than 50 mV.

Both potentiometers R16 and R28 are situated at the meander card.

3.4 OPTICAL ZERO ADJUSTMENT

a) Execute point ~~a~~, ~~b~~, ~~c~~, ~~d~~, ~~e~~ of 3.2.
b) Monitor the signals OPZ (card SS pin 48) and A0 (card SS pin 33).
c) Move the positioner from track 200 to track 000. In the vicinity of track 000 the signal OPZ becomes a '1', when the front side of the vane reaches the optical zero transducer. By beding the vane the figure below has to be competed.

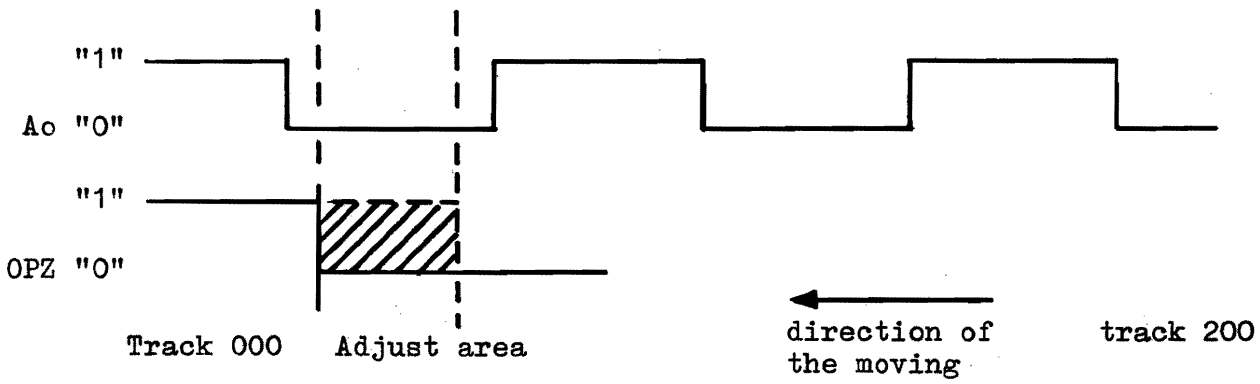

3.5 POSITIONING SPEED ADJUSTMENT

Starting with this adjustment, the meander signals, 'optical zero' and index pulses of the cartridge and the fixed disk must be correct. All cards must be installed for location of the potentiometers, see fig. 7-4

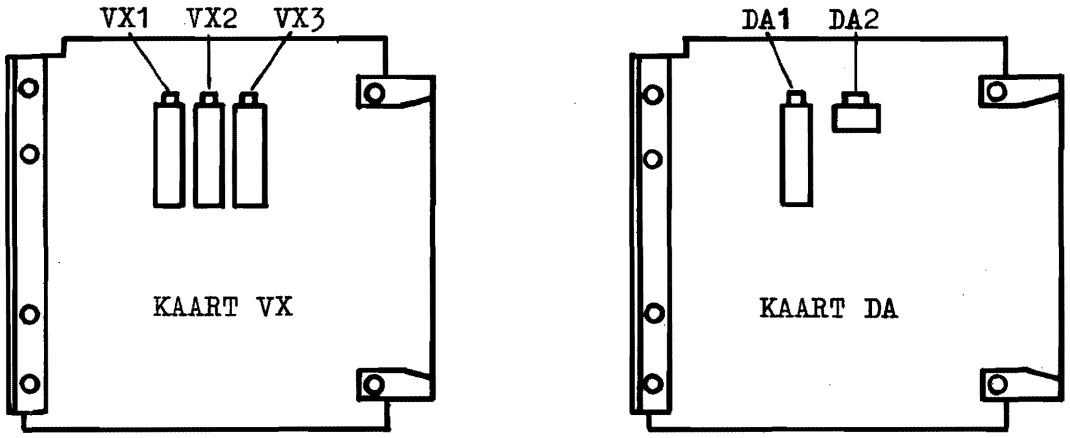

Fig 7-4

1) Turn the potmeters VX1 and VX2 fully CW, and then 5 turns CCW.
2) Turn potmeter VX3 (CS) fully CCW then ca 4 turns CW.
3) Turn potmeter DA1 (max. speed) fully CW. The speed is now minimal.
4) Connect one probe of an oscilloscope to pin 11 of card DA the "off set" of the speed signal, the positioner is in the retracted position. The "off set" must be $\leq$ 20mV. If not adjust with potmeter DA2.
5) Connect pin 33/HUP (signal $\overline{BPDA}^{35}$) to pin 04/HUP (ground).
6) Place a cartridge in the machine and start.
7) After 30 sec.the positioner starts with the first seek. When the positioner is unsteady during the first seek (whistle) turn VX3 another half a turn CW.
8) By means of the exerciser, do a repeat seek between track 64 and 128.
   Connect a trigger probe of the oscilloscope on signal EC pin 13 of card DC. Trigger the scope extern neg.
   Connect probe A on pin 31 of card PA (positioner current).
   Connect probe B on pin 11 of card DA (speed signal).
9) Turn potmeter DA1 CCW (speed is increased) till the current is correct, see fig.7-5with due regard to mentioned on point 11. When the speed becomes higher turn VX3 CW till it is correct, see fig.7-6 and 7-7

Note : It is important to switch between point 9 and point 11 during the adjustment. This can be done easily by switching only the polarity of the trigger level of the oscilloscope.

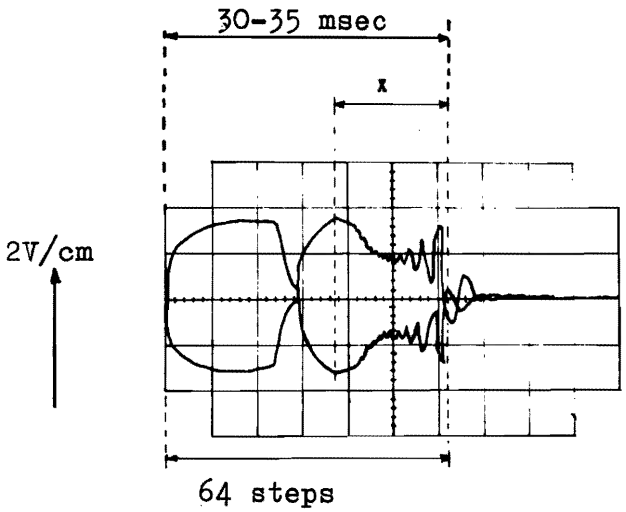

Fig. 7-5

The current should not be limited, fig. 7-6/7-7.
If it is limited turn the potmeter DA1 to the right.

10) Repeat point 8 but now between track 0 and 64 and between track 128 and 192, with due regard to mentioned on point 11.

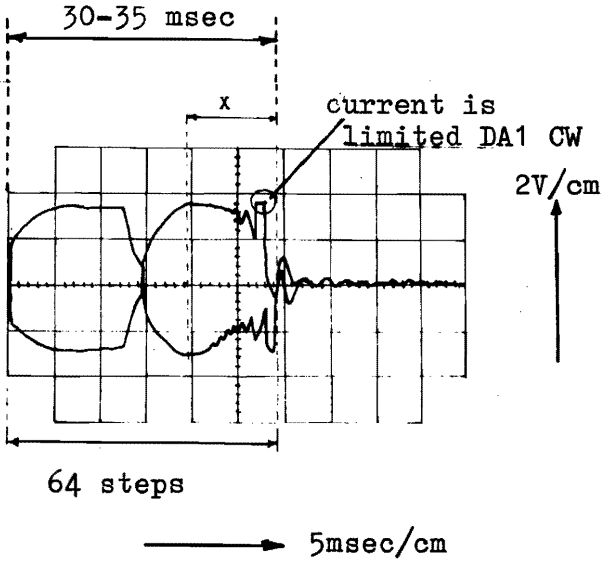

Fig. 7-6

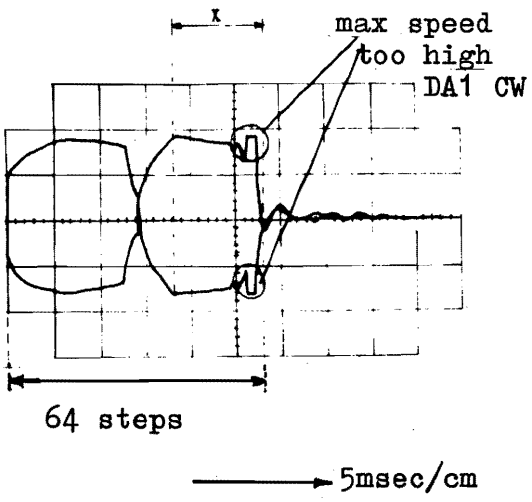

Fig. 7-7

11) Now trigger the scope pos on sign. EC, pin 13 of card DC.
Connect channel B on pin 11 of card DA (speed signal).
Measure the speed of incidence.
This must be between 10 and 13 cm/sec. This agrees with a voltage of 400-450 mV.
The fig. 7-8/7-9 give the correct pattern A1 and A2 must be 400-450 mV

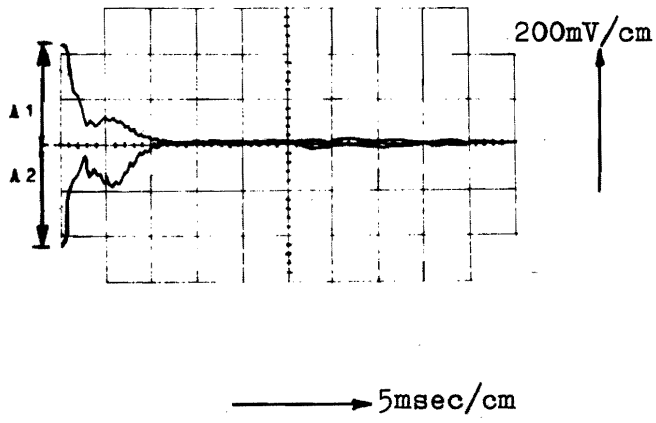

Fig 7-8

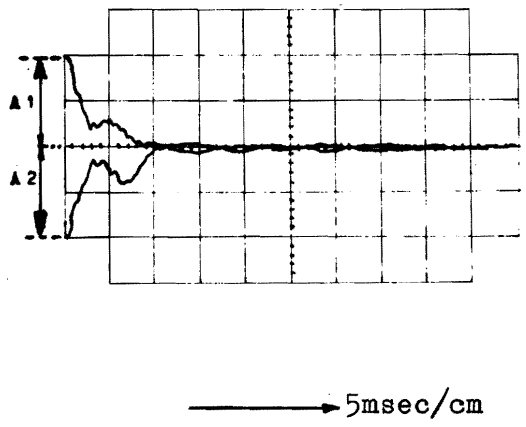

Fig 7-9

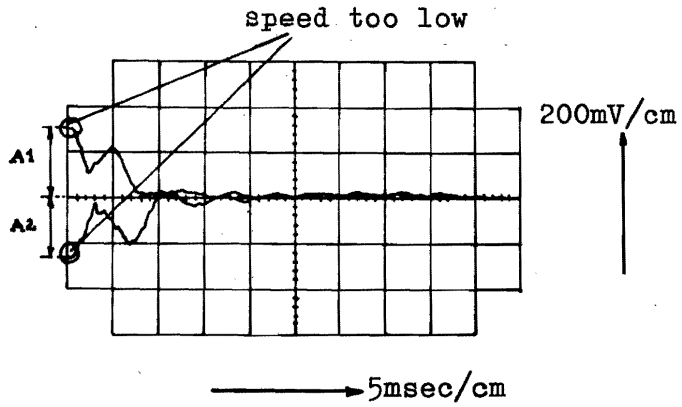

Fig 7-10

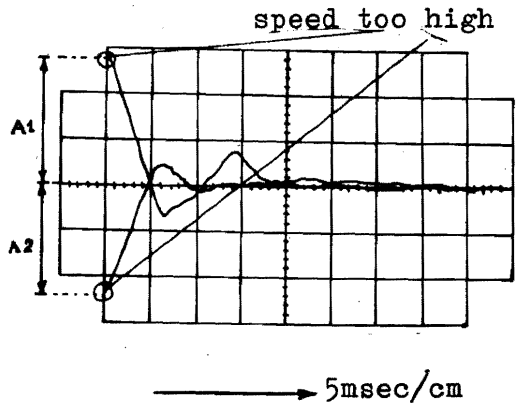

Fig 7-11

12) Check again on channel A of the scope the positioner, see point 8, 9, 10. When it is necessary to adjust DA1 do point 11 again.

13) Trigger scope pos on sign. $\overline{EC}$ pin 13/DC.
Connect channel A on signal SCX pin 49 of card VX.

* Adjust the positioning 1 or 2 steps forward/reverse in the neighbourhood of track 2 - 64 - 128 and 192 with VX1 and VX2.

14) By adjusting VX1 and VX2 in turn, a correct place position loop will be obtained. The slope will be adjusted by turning VX2 to the left means steeper, and to the right means shallower. By VX1 the overshoot is adjusted.
To the left means damping (less overshoot), to the right means less damping.
The figures 7-11/7-12 show the correct adjustment for respectively one and two steps, from the areas mentioned in point 13.

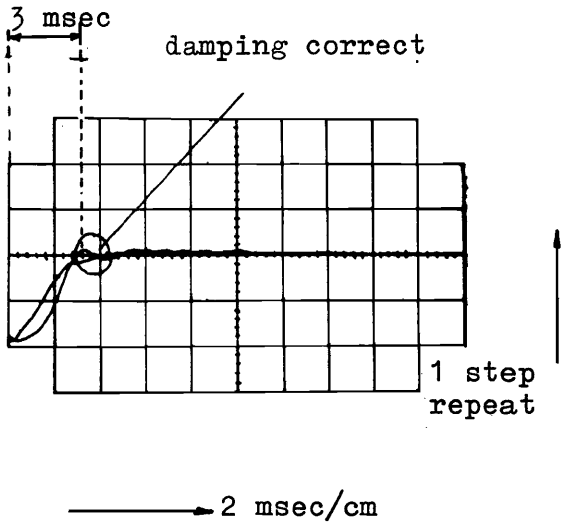

Fig 7-12

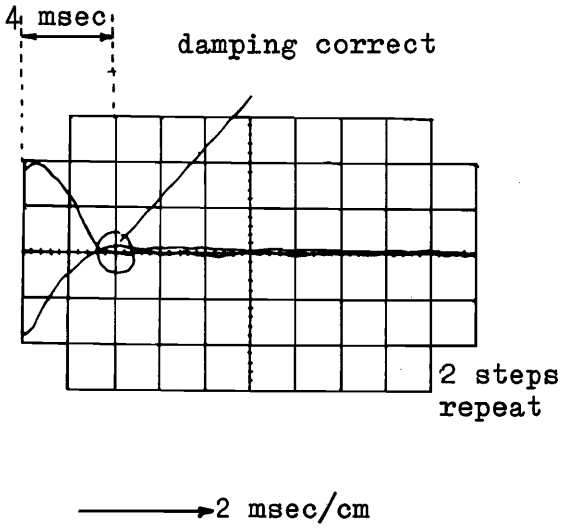

Fig 7-13

When the potmeter VX2 makes the slope too steep, the place position loop can become unstable, fig.7-14turn potmeter VX2 CW.

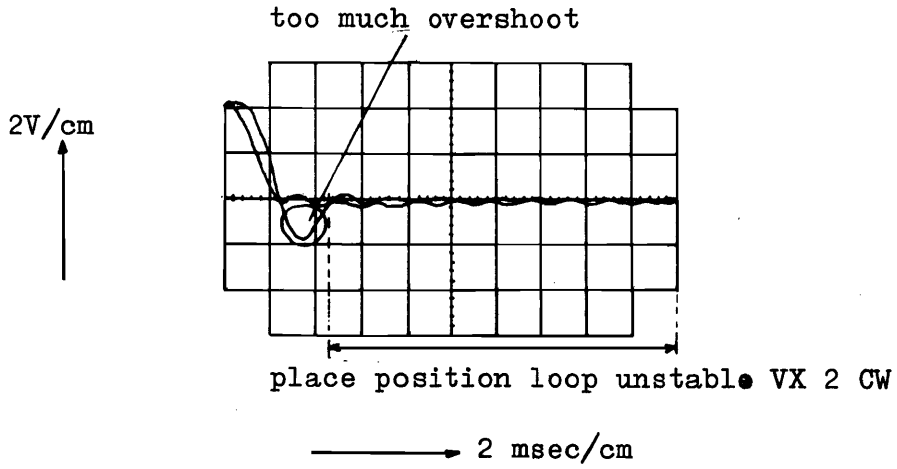

Fig 7-14

The polarity of the signal is dependent on the direction in which, and the polarity from where will be positioned.

The fig.7-15,7-16,7-17&7-18show examples of an incorrect adjusted position loop.

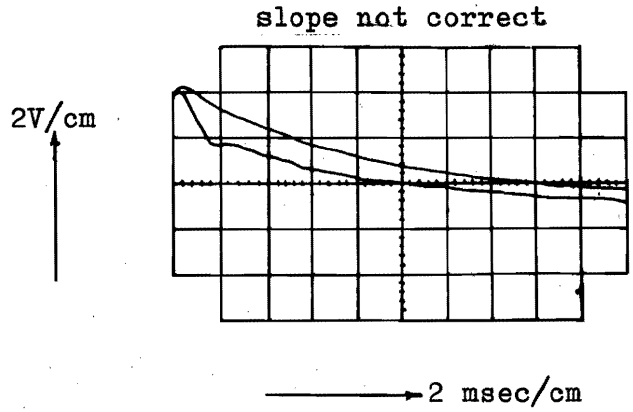

Fig 7-15

Positioning over one step.
VX2 must be turned CCW slope to shallow.

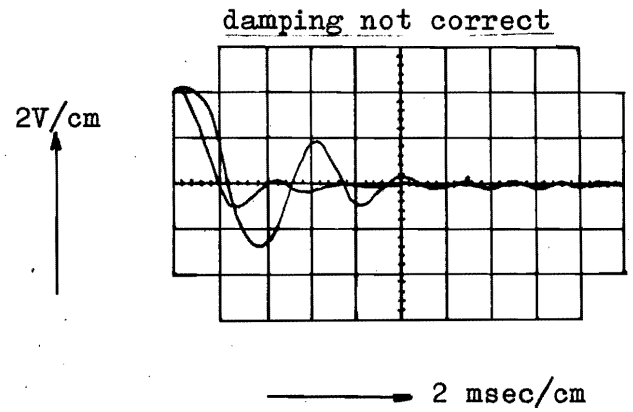

Fig 7-16

Positioning over one step.
Damping is insufficient.
Turn VX1 CCW and if necessary VX2 CW to reduce the slope.

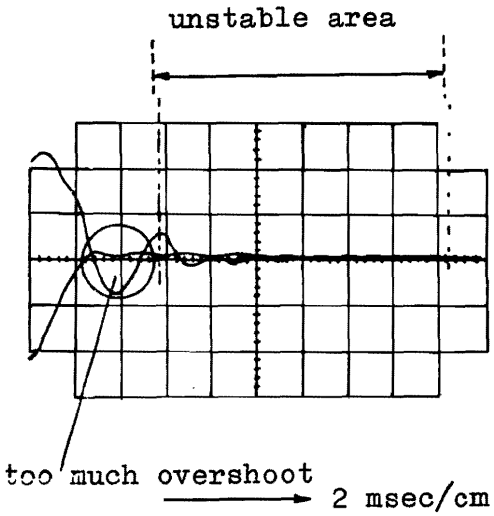

Fig 7-17

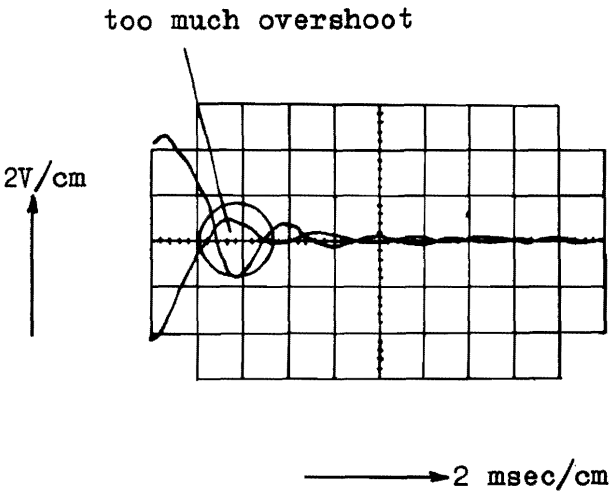

Fig 7-18

In figures 7-17&7-18 positioning is over two steps. The slope is too steep so the area x becomes unstable.
Also VX1 is not adjusted correctly.
Turn VX2 CW.

15) Start positioning over the next distance, and check the incidence shown in fig. 7-12&7-13 for scope adjustment see point 13.
Positioning from cylinder X to cylinder Y forward/reverse.

Cylinder X	Cylinder Y
0	1
0	2
0	8
0	32
0	64
32	33
32	34
32	40
32	64
32	96
64	65
64	66
64	72
64	96
64	128
128	129
128	130
128	136
128	160
128	192
192	193
192	194
192	200

16) Do point 15 again, with the following scope connections.
Trigger the scope positive, extern to signal $\overline{EC}$ pin 13 of card DC.
Connect channel A to signal WTC pin 27 of card HUP, and channel B to signal PONC pin 19 of card HUP.
In all the areas, the signal WTC must stay a '1' after signal PONC goes to a '0', (seek error).
The relationship between WTC and PONC is shown in fig. 7-19.
The time T must be at least 1 msec.

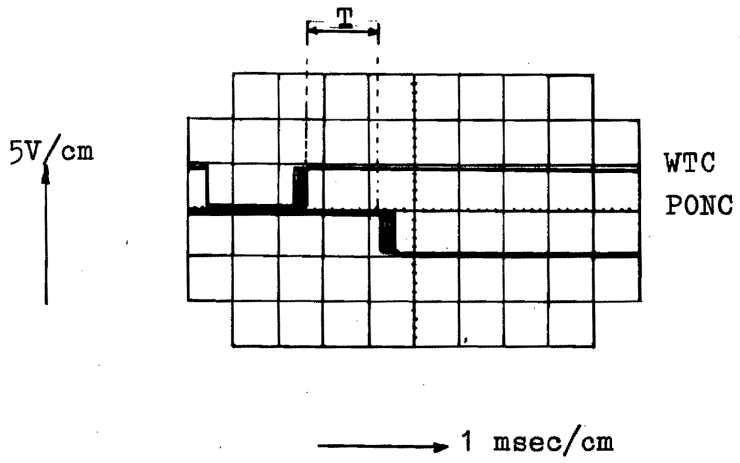

Fig 7-19

Fig.7-20 shows an incorrect situation, the place position loop must be adjusted again, starting with point 13.

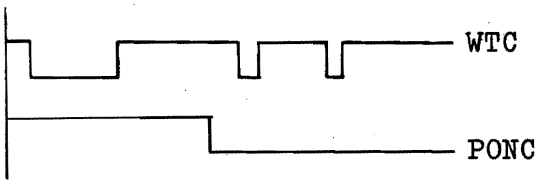

Fig 7-20

17) After the correct adjustments, turn potmeter DA1 on card DA $\frac{1}{4}$ revolution CW.

3.6 ADJUSTMENT OF HEADS 0 AND 1

The adjustment of the heads and the index unit must be done with the aid of a CE cartridge, and the CE card.
Also the torque tool must be used.

1) Insert the CE-card at cardposition 13 WC (write protect).
2) Insert the CE-cartridge.
3) Push power on and then start.
   Wait 30 minutes.
4) Connect the signal $\overline{\text{BPDA}}$ pin 33/HUP to the ground.
5) Connect channel A of the scope to pin 07/RR (read signal).
6) Connect channel B of the scope to pin 61/SS and trigger intern, positive at the same signal (index pulse). (found disk index pulse 5 6)
7) Position the heads to track 073 by means of the test case.
8) Select head 0.
9) Adjust head 0 as shown in fig. 7-21.
   The centre zero must be ± 0,2 cm.

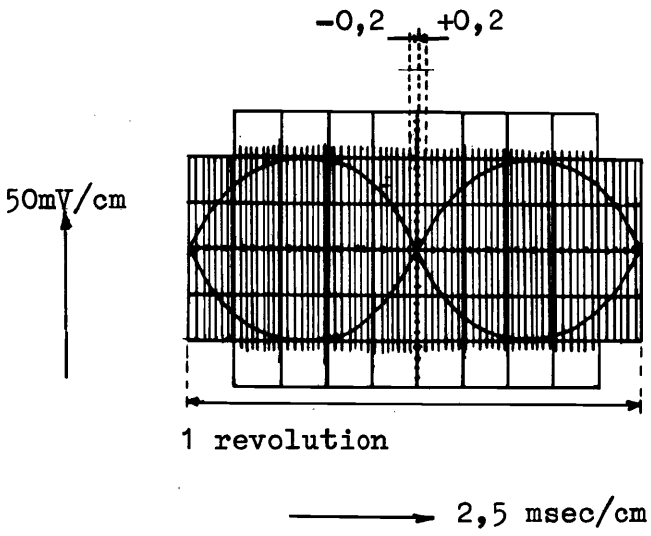

Fig 7-21

10) Repeat step 9 for the head 1.
11) Switch the time base calibration again to normal, and set the time base to 5 µ sec/cm, using pas triggering like step 5.
12) Positioning to track 005.
13) Select head 0.
14) Adjust the index
15) Select head 1.

16) Repeat step 14.

17) When steps 14 and 16 have a different value, take the average deviation, in such a way that T = 20, 0 /u sec ± 3 /u sec, see fig. 7-22.

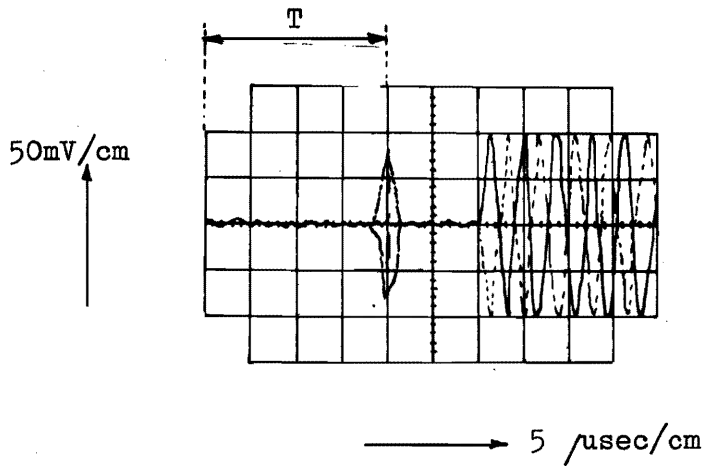

Fig 7-22

3.7 ADJUSTMENT OF THE INDEX UNIT (CARTRIDGE)

1. Connect channel A of the ascilloscope with pin 53 of card LCE (IC2) and trigger intern neg.
2. Insert a cartridge with broad slots.
3. Start the CDD.
4. Check if the signal in the ascilloscope is the same as fig 7-23.

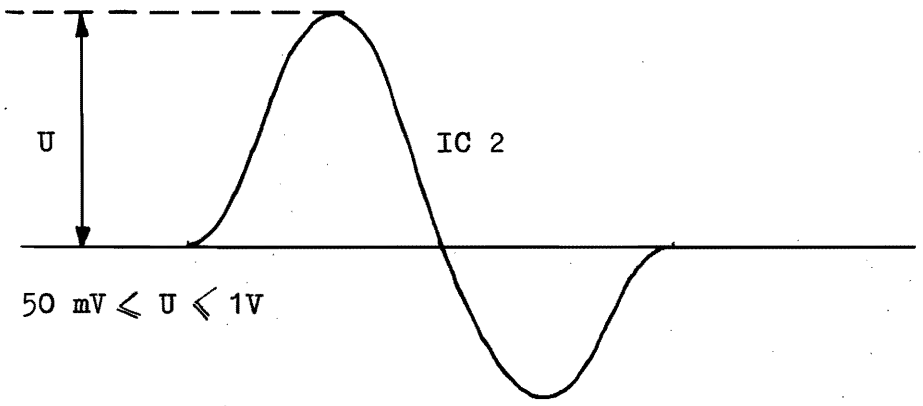

Fig 7-23

5. Do the same check again with a cartridge with small slaks.

3.8 ADJUSTMENT OF THE INDEX UNIT (FIXED DISK)

1. Connect channel A of the ascilloscop with pin 43 of card LCE (IF1) trigger intern neg.
2. Start the CDD.
3. Check if the signal on the ascillascope is the same as fig 7-24.

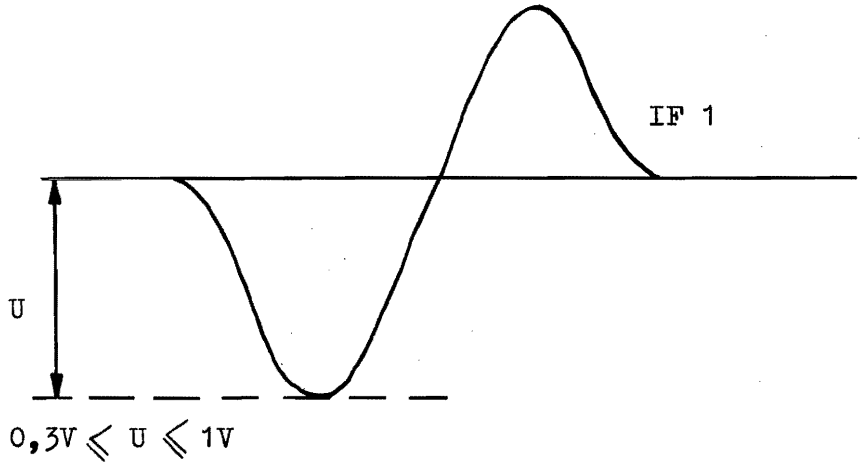

Fig 7-24

4.1 INDEX UNIT CARTRIDGE

1. Remove the bottomplate which is above the fixed disk (3 screws).
2. Adjust the height of the index unit sec fig 7-25

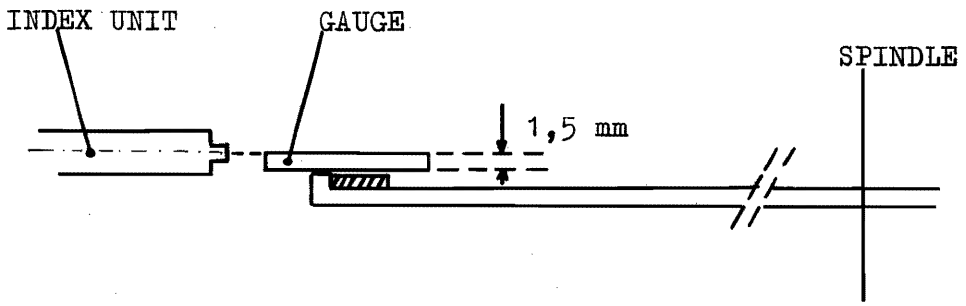

Fig 7-25

3. Loosen the two fixing screws of the index unit.
4. Adjust the index unit with the gauge, so that it is just free. See fig 7-26

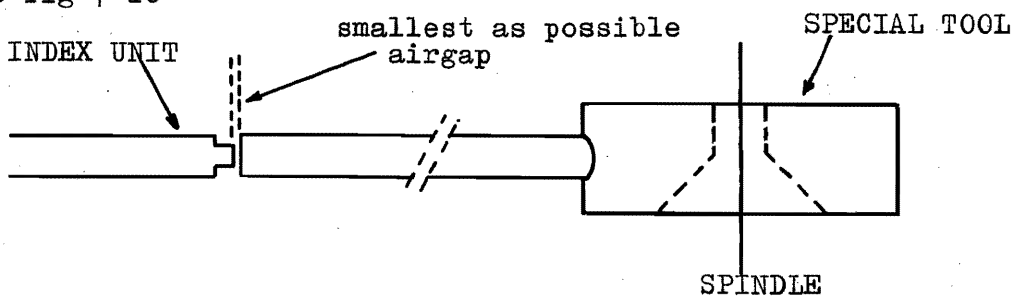

Fig 7-26

5. Tighten the wro fixing screws of the index unit.

4.2 INDEX UNIT FIXED DISK

1. Loosen the locknut of the index unit.
2. Adjust the index unit with respect of the sector ring by means of a feeler gauge 0.35 mm. See fig 7-27

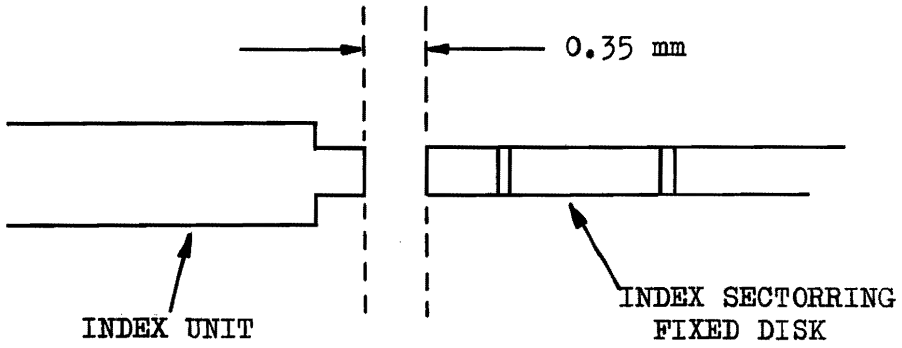

Fig 7-27

3. Check that the sector ring doesn't touch the index unit.

4.3 RETRACTED SWITCH

1. Loosen the screws of the micro switch and shift it so, that it is activated 1 mm $\pm$ 0.5 before retracted.
2. Tighten the screws.

N.B. When it is not possible to shift the retracted switch, the switch arm may be bent.

4.4 CLEANING THE HEADS

1. Remove rear top cover.
2. Remove air guide and push the brushes carefully inside the cartridge holder.
3. Remove meander card, and meander house (2 screws).
4. Clean the heads (see page 7-7).
5. Replace meander house, and than meander card.
6. Replace air guide and rear top cover.

5.1 GENERAL

Before replacing any part switch off the power on the rear.
All cards except VX and DA can be replaced without preliminary adjustments.
Be aware of the strong magnetic field of the positioner magnet (watches, tools, measuring equipment).

5.2 AIRFILTERS

5.2.1 Fine filter (fig 7-28)

1. Disconnect connector of front panel (JF-PF)
2. Remove four dixing screws of the frontpanel, remove frontpanel.
3. Take out the fine filter and replace new one; be sure of the correct air flow (red arrow).
4. Replace frontpanel.
5. Connect JF - PF.

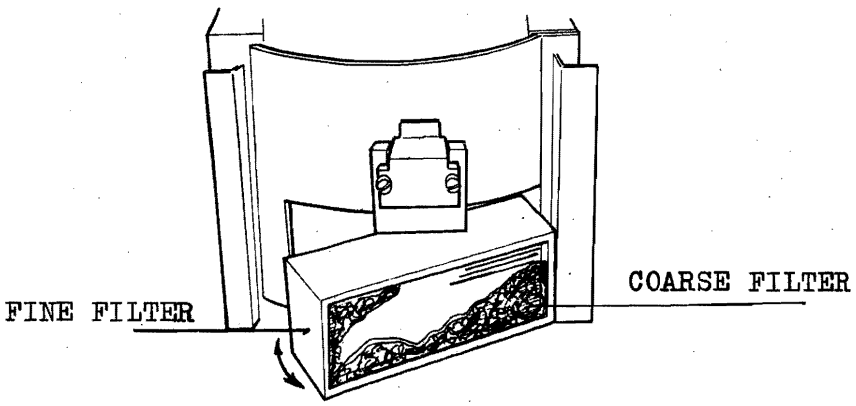

Fig 7-28 FILTERS

5.2.2 Coarse filter

1. The coarse filter can be taken out by hand, out of the fine filter.

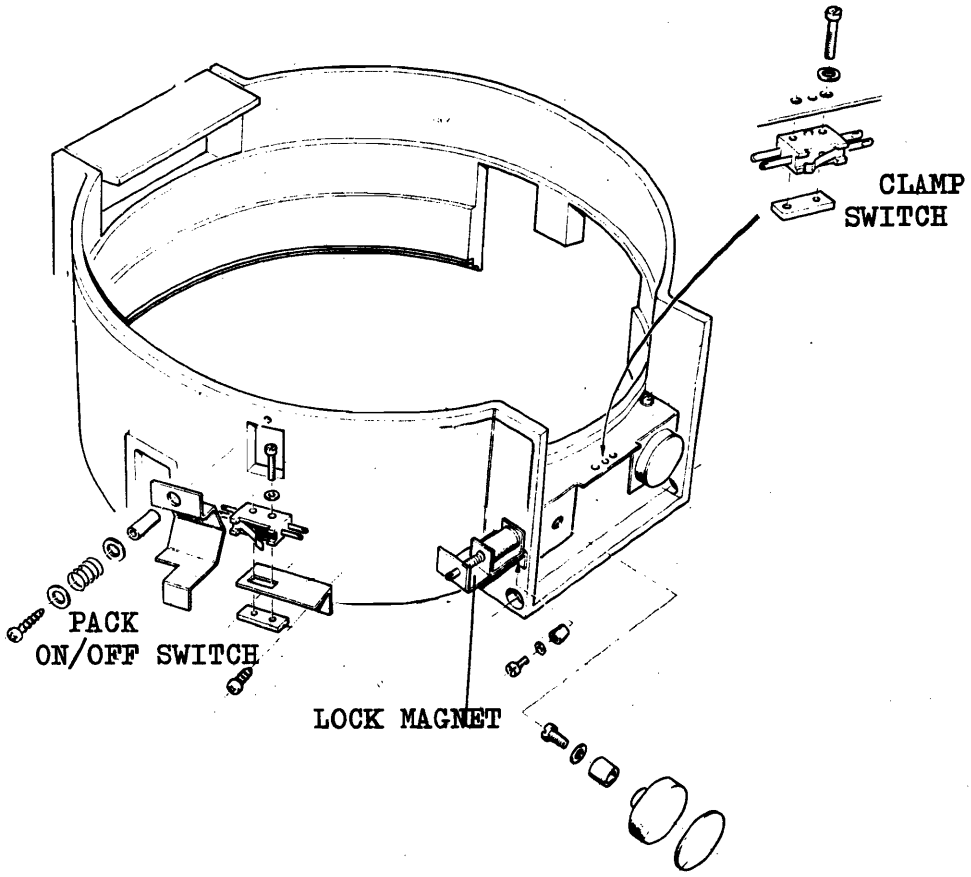

Fig 7-29 SWITCHES

5.3 LOCK MAGNET (fig 7-29)

1. Remove front top cover.
2. Remove unit from cartridge holder.
3. Insert new one.
4. Remove wires from the old one and connect to the new one.

5.4 CLAMP SWITCHES (fig 7-29)

When opening or closing right hand clamp switch, pull out the lock magnet pin.

1. Remove top front cover.
2. Remove the plate on which the switch is situated by removing the screws
3. Take out the micro-switch by loosening the screws,
4. Insert a new one.
5. Connect wires from the old one to the new one in the right order.
6. Insert the plate.
7. Check working.

5.5 PACK ON/OFF SWITCH (fig 7-29)

1. Remove front top cover.
2. Remove micro-switch unit from cartridge holder.
3. Install new micro-switch.
4. Connect wires in correct order.
5. Check working.

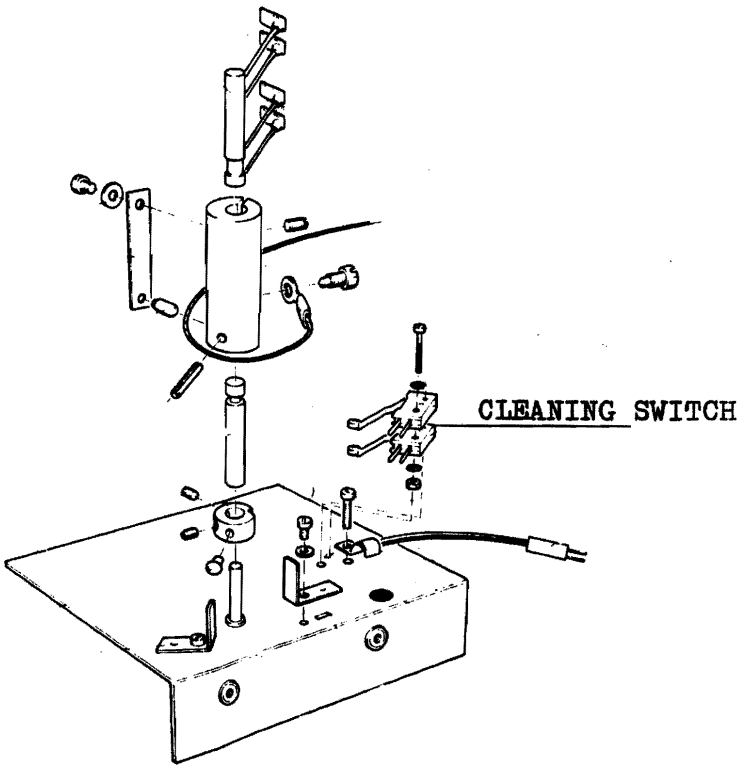

Fig 7-30

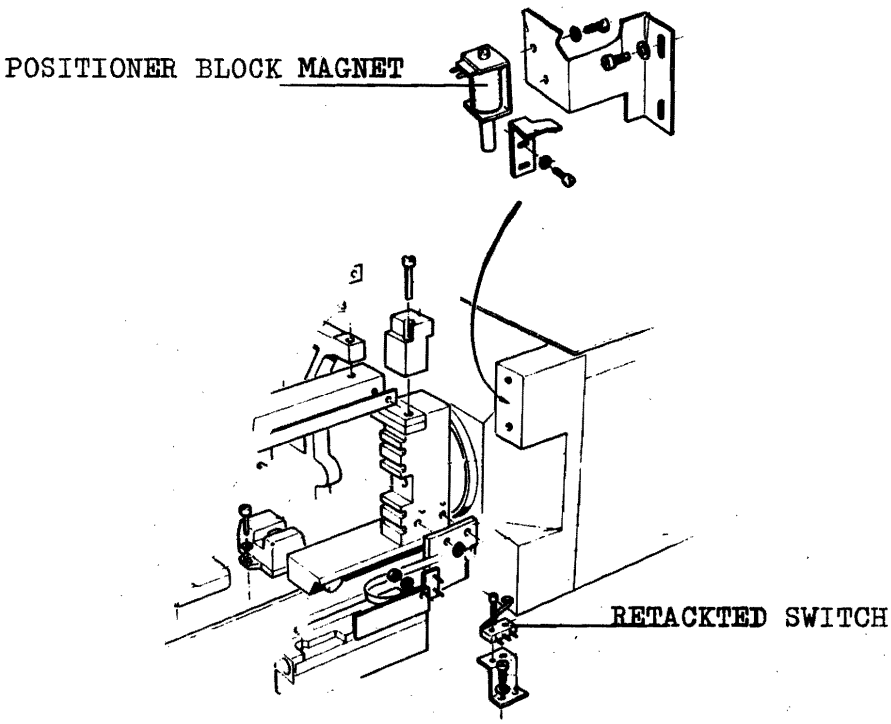

Fig 7-31 POSITIONER

5.6 CLEANING SWITCH (fig 7-30)

1. Remove rear top cover.
2. Remove air guide cover (fixed with two screws to the cartridge holder).

   CAUTION: WHEN REMOVING BE SURE THE HOUSING CAN NOT TOUCH THE FIXED DISK

3. Replace micro-switch.
4. Remove wires from the defect one and connect in correct order to the new one.
5. Check working.
6. Refit air guide cover.

5.7 RETRACTED SWITCH (fig 7-31)

1. Remove rear top cover.
2. Pull the positioner to the fully retracked position.
3. Remove the switch and replace a new one.
4. Connect wires to the corresponding pins.
5. Check working.

   CAUTION: DO NOT MOVE POSITIONER TOO MUCH FORWARD SO THAT THE HEADS BECOME LOADED

5.8 POSITIONER BLOCK MAGNET (fig 7-31)

1. Remove rear top cover.
2. Push the positioner to the fully retracted position.
3. Remove the magnet and replace new one.

   CAUTION: DO NOT MOVE POSITIONER TOO MUCH FORWARD SO THAT THE HEADS BECOME LOADED

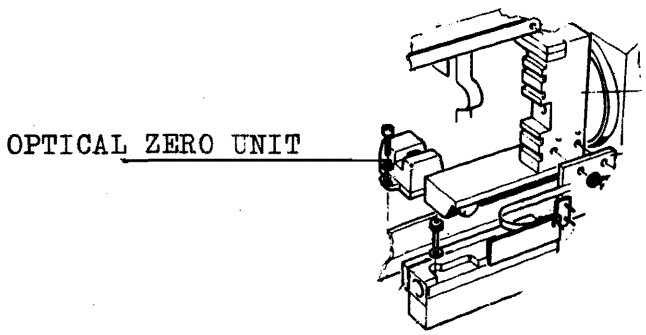

Fig. 7-32

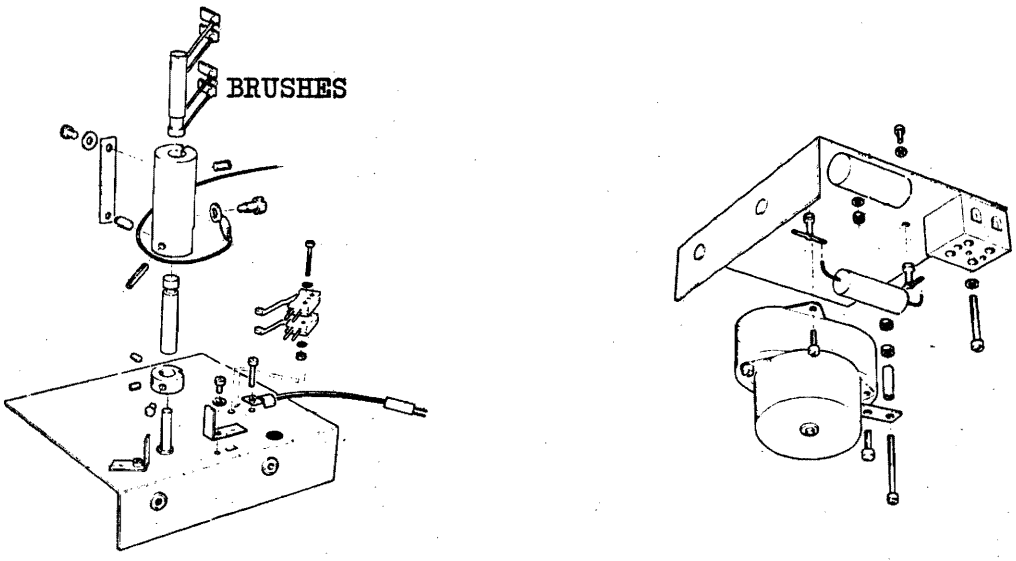

Fig. 7-33 CLEANING UNIT

4. Connect wires to the corresponding pins.
5. Check working.

5.9 OPTICAL ZERO UNIT (fig 7-32)

1. Remove rear top cover.
2. Disconnect plug OP2 - unit.
3. Remove unit (2 screws).
4. Insert new one.
5. Connect plug.
6. Adjust OP2 (see 3.4).

5.10 CLEANING UNIT (fig 7-33)

1. Remove bottom cover.
2. Remove air guide cover.
3. Remove cable from connecting block.
4. Disconnect plug PD.
5. Remove rear- and front top cover.
6. Disconnect brush retracting cable.
7. Remove brush arm assembly.
8. Remove unit by loosening two screws at the right side of the disk unit.
9. Install new unit.
10. Adjust position of the cleaning unit (special tool).
11. Check that the brush arms never touch the disk.

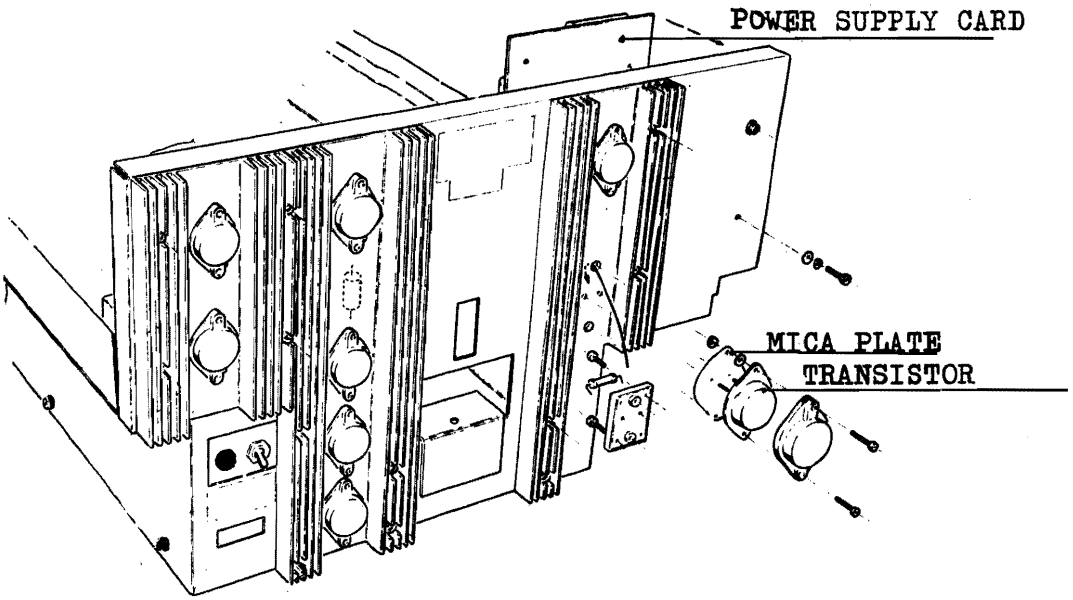

Fig.7-34 POWER SUPPLY

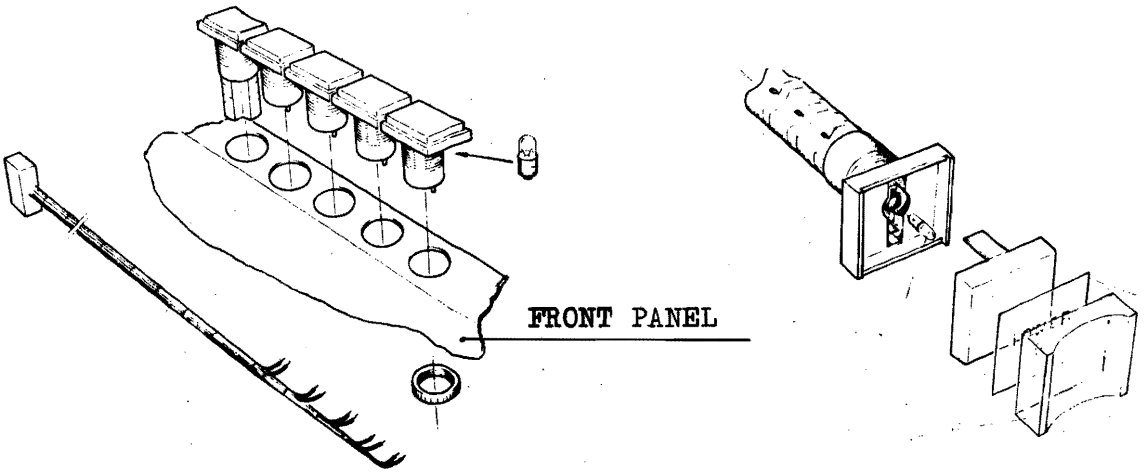

Fig.7-35 PUSHBUTTON AND INDICATORS

5.11 POWER SUPPLY CARD (fig 7-34)

1. Remove rear top cover.
2. Remove connector PV on power card.
3. Remove wires from connecting block.
4. Remove four screws on the rear, holding the power supply card.
5. Replace card.
6. Fit wires in connecting block.
7. Connect plug PV.
8. Check voltage without all cards.

5.12 POWER TRANSISTORS (fig 7-34)

1. Loosen the two screws of the defected transistor.
2. Replace the new transistor. USE A NEW MICA PLATE.

5.13 PUSH BUTTON AND INDICATORS (fig 7-35)

1. Remove front top cover.
2. Disconnect connector of front panel (JF-PF).
3. Remove front panel.
4. Unsolder wires of faulty button/indicator.
5. Take out the button/indicator.
6. Fix new one in position.
7. Solder wires to button/indicator.
8. Fasten front panel.
9. Connect connector (JF-PF).

5.14 LAMP PUSH BUTTON AND INDICATORS (fig 7-35)

1. Disconnect the lenscap.

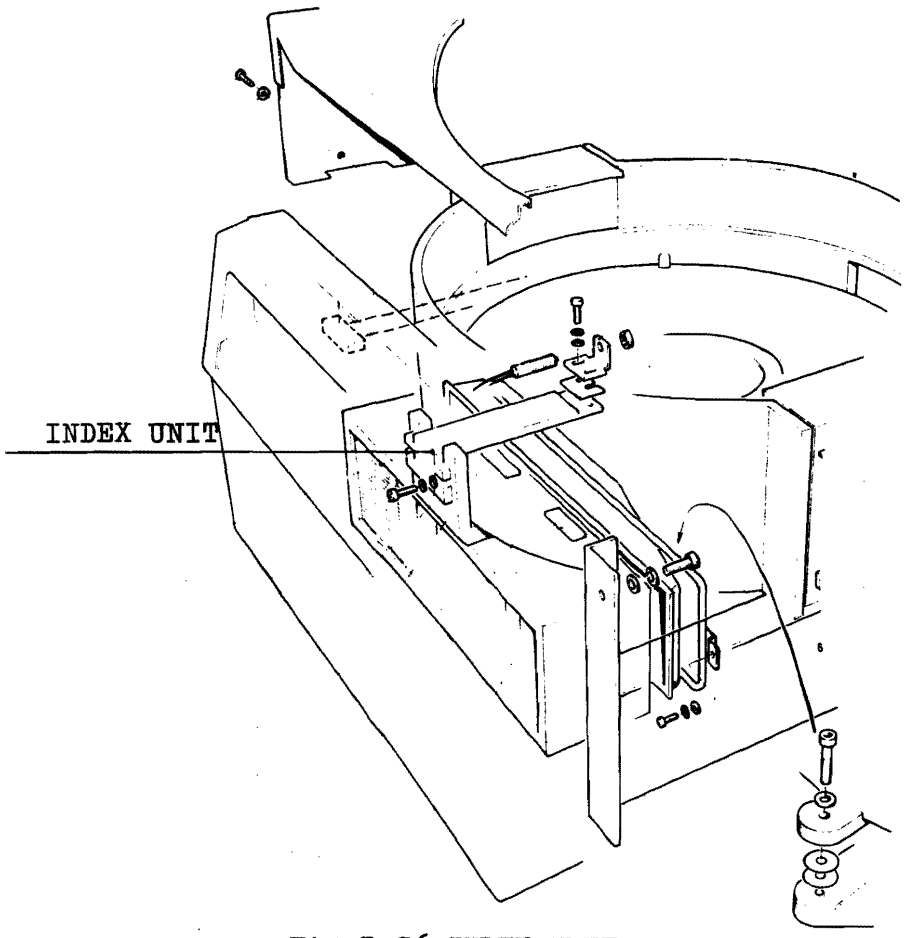

Fig.7-36 INDEX UNIT

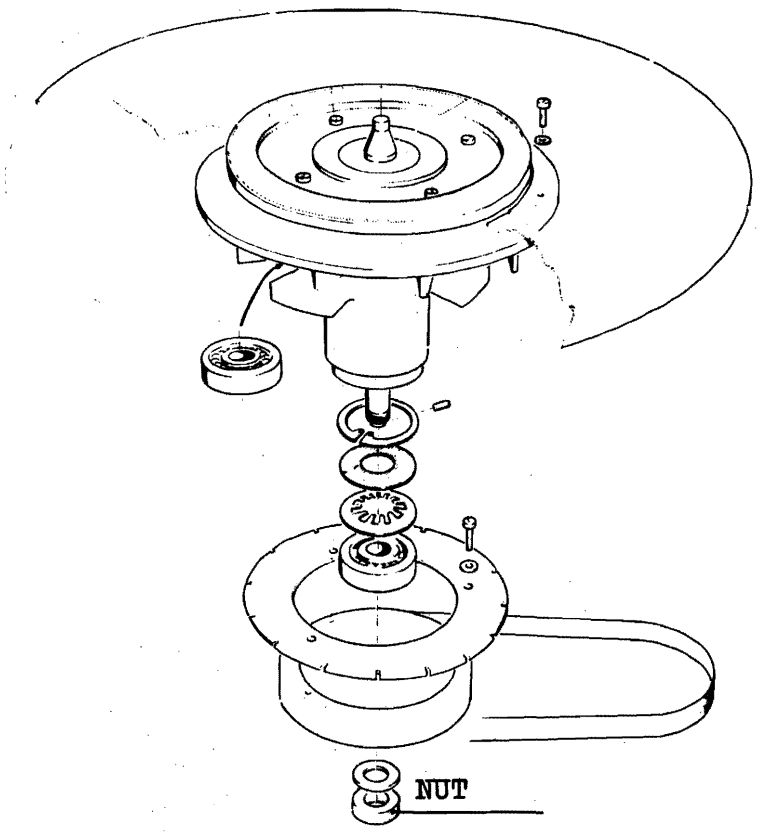

Fig. 7-37 FIXED DISK

2. Remove the defective lamp (by means of a tweezer) and replace a new one.

3. Replace lens cap.

5.15 INDEX UNIT CARTRIDGE (fig 7-36)

1. Remove front top cover.
2. Remove front panel.
3. Remove first bottom plate (three screws).
4. Loosen plug PB.
5. Remove index unit.

   CAUTION: Be careful with the fixed disk.
6. Replace the unit by a new one.
7. Connect plug PB.
8. Adjust the unit mechanical (4.1).
9. Replace base plate.
10. Adjust the unit electrical (3.7).

5.16 FIXED DISK (fig 7-36 and 7-37)

1. Remove front top cover, rear top cover and the front panel.
2. Remove first bottom plate (three screws).
3. Loosen index unit support and take it out as far as possible of the cartridge holder.
4. Remove the fixing ring. Be careful with fixed disk.
5. Take out the fixed disk.
6. Replace new one (use gloves).
7. Replace the fixing ring.
8. Place index unit report.
9. Adjust mechanical (4.1).
10. Instal first base plate.

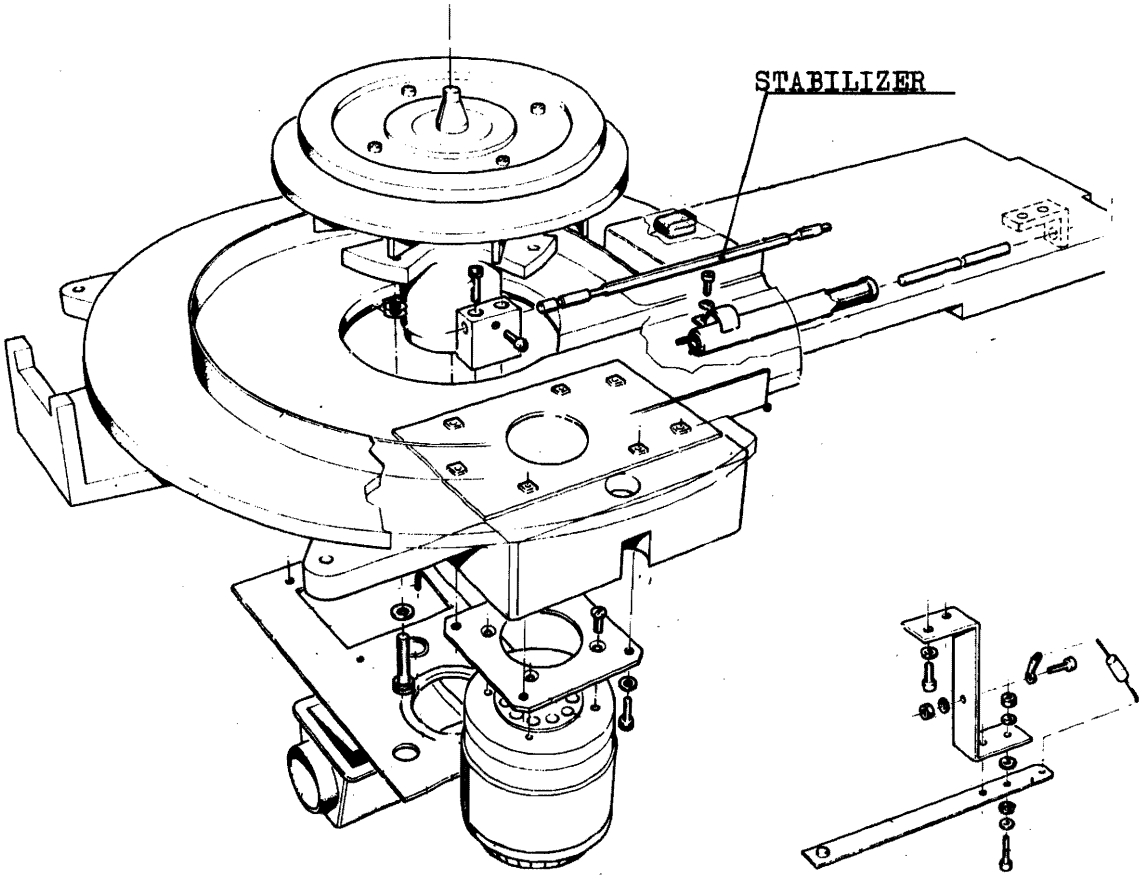

Fig. 7-38 SPINDLE AND PACK MOTOR

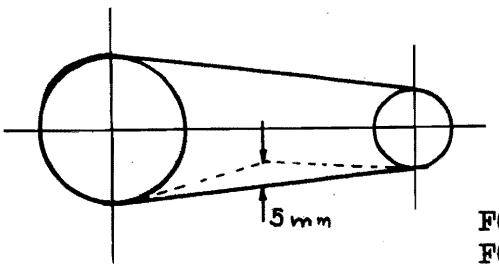

FOR 5 MM DISPLACEMENT
FORCE EQUELS 1.25 TO 1.5 KG.

Fig. 7-39 ADJUSTING OF THE BELT

11. Adjust index unit electrical (3.7).

12. Fix front panel and covers.

5.17 SPINDLE (fig 7-38)

1. Remove upper and bottom covers.
2. Remove index unit with support (see 5.15).
3. Remove fixed disk (see 5.16).
4. Remove spindle earth contact fig 7-38.
5. Remove drive belt.
6. Loosen the nut, holding the pulley in position (special-tool).
7. Take of the pulley.
8. Loosen the three screws hoding the spindle, for one screw first remove a plastic cap.
9. Take out the spindle (upwards). Take care of the shims between spindle and frame.
10. Replace new spindle, DON'T FORGET THE SHIMS.
11. Replace pulley.
12. Replace drive belt.
13. Replace earth c ntact.
14. Check belt tension (5.18).
15. Replace bottom cover.
16. Replace fixed disk.
17. Replace index unit.
18. Replace covers.

5.18 PACK MOTOR (fig 7-38)

1. Remove bottom cover.
2. Remove drive belt.
3. Disconnect wires from connecting block.

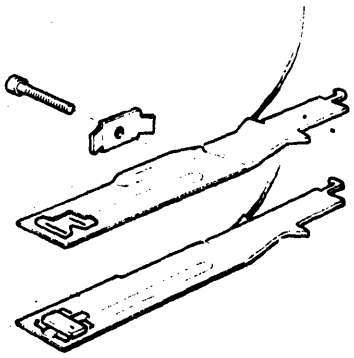

Fig. 7-40 UPPER AND LOWER HEAD

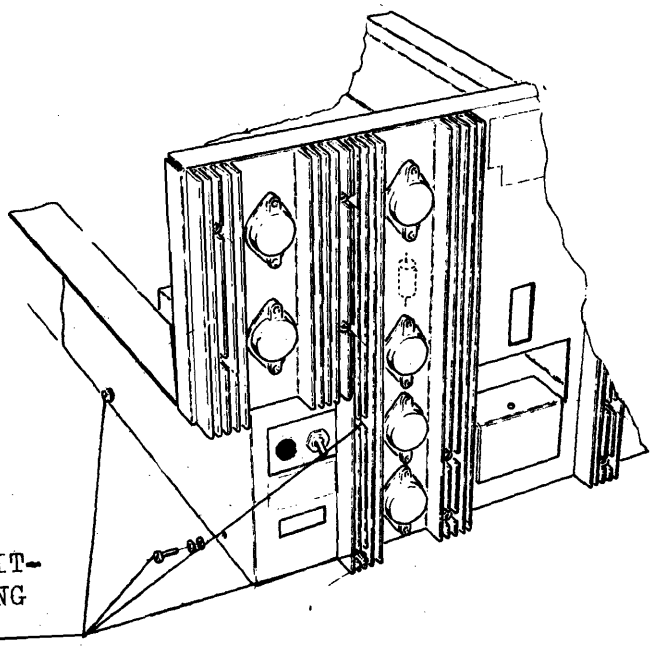

Fig. 7-41 REAR PANEL

4. Remove motor.
5. Insert new motor.
6. Replace drive belt.
7. Adjust tension of drive belt. See fig 7-39.
8. Connect the wires on the connecting block.
9. Replace the bottom cover.

5.19 HEADS (fig. 7-40)

1. Remove rear top cover.
2. Disconnect head plugs from pre-amplifier card.
3. Move the positioner about 2 cm from retracted

DO NOT LOAD THE HEADS

4. Insert head remover (special tool).
5. Unscrew the two head fixing screws.
6. Remove the head screws and clamp.
7. Remove carefully the head.
8. Insert new head in the head remover.
9. Replace new head.
10. Partially fasten the screws.
11. Take off the head remover.
12. Adjust the heads (3.6).
13. Fasten the screws with a tarque wrench 7 kgf/cm.

5.20 SWITCHING UNIT (fig 7-41 and 7-42)

1. Remove rear top cover.
2. Remove bottom cover.
3. Remove earth wires and cables to pack motor and cleaning motor.

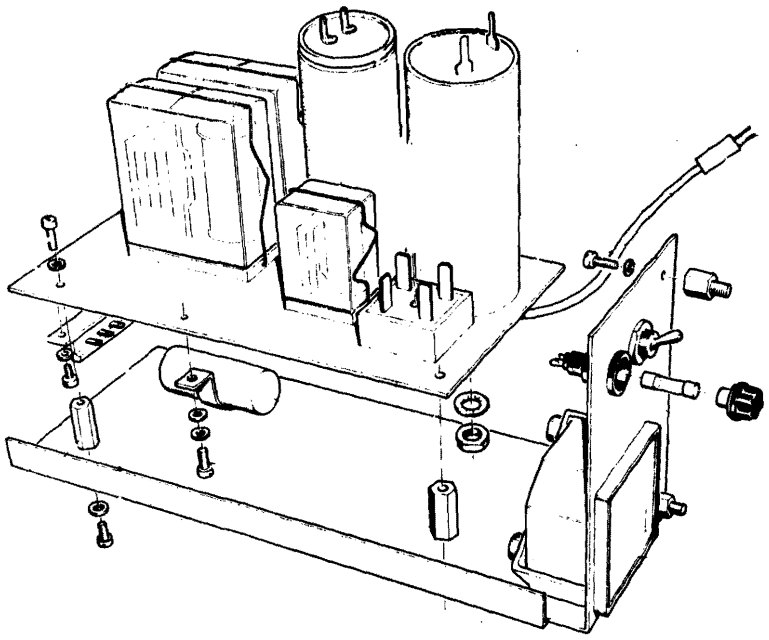

Fig 7-42 SWITCHING UNIT

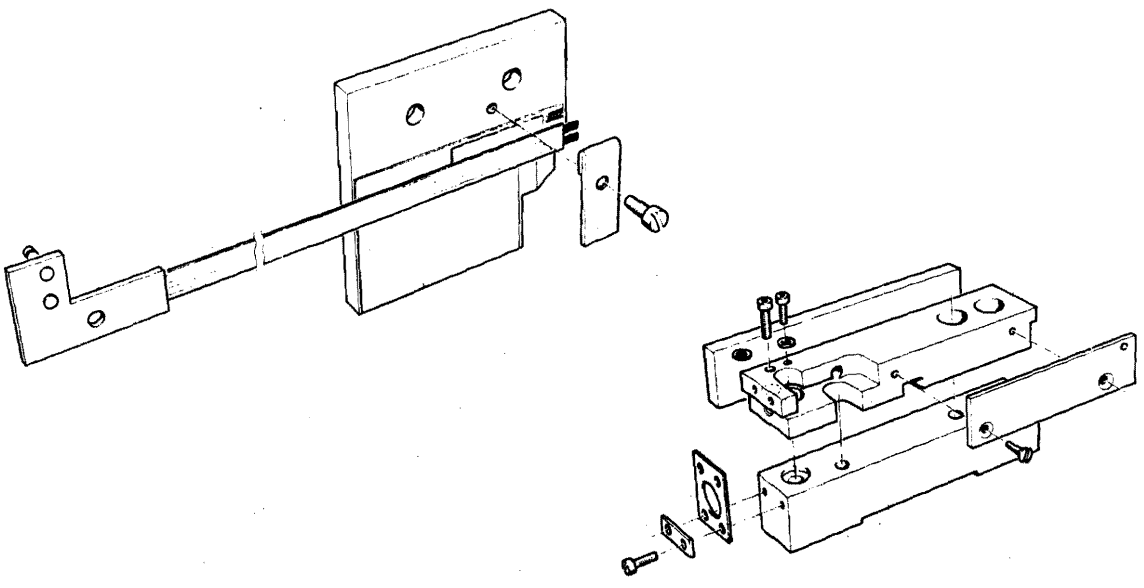

Fig 7-43 MEANDER

4. Loosen the two screws at the right side, and the two at the rear side.
5. Take out the unit as far as possible.
6. Loosen the other wires, noting their position.
7. Fasten the wires to the new unit.
8. Replace new unit.
9. Fasten the cables.
10. Replace bottom-and rear top cover.

5.21 MEANDER (fig 7-43)

1. Remove index unit with support see 5-15.
2. Remove cartridge holder.
3. Remove fixed disk see 5-16.
4. Loosen the screw clamping the stabilizer rod (see fig 7-38).
5. Loosen stabilizer rod from meander block.
6. Loosen prim. meander supply wires.
7. Loosen two screws holding secondary meander block.
8. Carefully take out the meander block.
9. Insert new one; KEEP IT AS FAR AS POSSIBLE FROM THE PRIM MEANDER
10. Fasten the supply wires.
11. Fasten stabilizer rod to meander and clamping block.
12. Replace fixed disk.
13. Replace the cartridge holder, DON'T FORGET THE SHIMS.
14. Replace index unit.
15. Adjust secondary meander (see 3.2).
16. Adjust index unit (see 4.2).

6.1 GENERAL

If there is a fault in the C.D.D. the following fault-finding procedure is recommended.

a) Check that the cards are in the right location in the Electronics Cage.
b) Ceck that the cards are pushed fully home.
c) Check that all plugs are connected.

SYMPTOM	PROBABLE CAUSE	REMEDY	REFERENCE
1. Power on indicator on operators panel doesn't light.	a. Driver on LCE defect. b. +12V absent. c. The lamp on operators panel defective. d. Plug P2 loose or defect in wiring.	a. Replace LCE. b. Check and/or replace fuse F3 (See also 6.b). c. Replace the lamp of power on indicator. d. Check P2 and/of wiring.	
2. Exchange indicator on operator panel doesn't light.	a. The lamp on operator panel defective. b. Driver on LCE defective. c. Signal EXC' non active. d. Plug P2 loose or defect wiring.	a. Replace the lamp. b. Replace LCE. c. Replace SS, if necessary measure EXC'. d. Check P2 and/or wiring.	
3. Power on- and EXC indicators operator panel do	a. Fuse F7 defective b. +12V absent fuse F3. c. Power supply card defective. d. 220V AC not present. e. Power On/Off switch defective, S1 defective. f. Plug P2 loose or defective in wiring g. Both drivers on LCE defective.	a. Replace F7 b. Replace F3 (See also 6.b). c. Check DC voltages. See also Power on, point 5 and 6. d. Check 220 V AC circuit viz.: plug PN, wiring internal, external. e. Check and/or replace S1. f. Check P2 and/or wiring. g. Replace LCE.	

SYMPTOM	PROBABLE CAUSE	REMEDY	REFERENCE
4. Cleaning brushes stay on constantly.	a. Signals BIRN/BIRA wrong Measure these.	a. Check wiring and/or replace micro switch S2.	
	b. Defect on LCE signal CME* constantly active	b. Replace LCE.	
	c. Defect on SS, signal CME' constantly active.	c. Replace SS.	
	d. Relay RL3 in switch unit defective	d. Replace Rl3.	
	e. Adjustment micro switch	e. Check adjustment S2.	
5. No DC voltages present	a. See Power On, point 3 (a.-d. and e.)		
	b. Power supply card plug PV loose	b. Check plug PV.	
	c. AC-wiring to TR1 not o.k.	c. Check wiring.	
	d. Transformer TR1 defective. viz.: klixon	d. check transformer, in case klixon is defective, replace transformer.	
6. One or more of the DC voltages not present.	a. One of the following fuses defective F1(+5V)*-F2(-12V) F3(+24V)-F4(+12V) F5(+35V)-F6(-35)	a. Check and/or replace fuses in in question.	
	b. One of the power transistors on the heat sink defective T6 (+5V) - T7 (+24V) T8 (+12V)- T9 (-12V)	b. Check and/or replace the transistor in question.	
	c. Wiring of transformer to power supply card defective	c. Check and repair the wiring.	
* In case of defective fuse F1, the spindle starts immediately after power on.	d. Wiring from the power supply card to the power transistor on the heat sink defective	d. Check and repair the wiring.	

SYMPTOM	PROBABLE CAUSE	REMEDY	REFERENCE
	e. Defect on power supply card.	e. Replace power supply card.	
	f. Defect on driver print resp. +5V and ±35V	f. Repair defect.	
	g. Diode stack RF1, mounted on plate under the driver print defective (±35V)	g. Replace RF1.	
	h. Diode stack RF2, mounted on plate under the driver print, defective (+5V)	h. Replace RF2.	
7. Clamp right-hand blocked. Cartridge not removable.	a. Lock magnet defective	a. Replace lock magnet	
	b. Signals on LCE out of order	b. Replace LCE	
	c. Controlling from SS out of order	c. Replace SS.	
	d. Defect in wiring from back panel to the lock magnet	d. Check and/or repair wiring.	
	e. Lock magnet is blocked	e. Repair clearance safety pin.	
8. Lock magnet on positioner stays without power.	a. Lock magnet defective	a. Replace lock magnet	
	b. Wiring, or fasten connection from driver print to lock magnet defective	b. Check and/or repair the connection.	
	c. Diode D7, under the driver print defective	c. Replace D7	

SYMPTOM	PROBABLE CAUSE	REMEDY	REFERENCE
9. Positioner stays without power, if carefully pushed out of retracted position.	a. +35V and/or -35V not present	a. Check and/or replace fuse F5 and/or F6, measure the voltages to the fuses.	
	b. +35V and/or -35V absent. F5 and F6 are in order. Diode stack RF1 defective.	b. Check wiring and if necessary, replace R1.	
	c. Retracted switch defective, causing at the same time, PA to be defective.	c. Check switch and adjustment, check PA and replace, if necessary, switch and/or PA.	
	d. Power transistors defective, resp. T1/T2 and T3/T4.	d. Check and/or replace T1/T2 and T3/T4.	
	e. Defect on card PA signals RP' and/or DRS defective.	e. If necessary, measure RP' and/or DRS. Replace PA.	
	f. Defect on SS. signal RP' constantly active.	f. Replace SS.	
	g. Retracted switch defective, causing at the same time R10 on the driver print to be defective (This error occurs only after EMB action).	g. Check switch and adjustment, check R10 and replace it necessary switch and/or R10.	
10. After Power ON, Fault indicator lights immediately.	a. Driver on LCE defective signals UNS and UNS.	a. Replace LCE.	
	b. Signal UNS on HUP constantly active.	b. Replace HUP.	

SYMPTOM	PROBABLE CAUSE	REMEDY	REFERENCE
1. Spindle does not start. Start/stop indicator does not	a. Cartridge on/off switch function wrong signal RTO	a. Check switch function, wiring, adjustment switch, replace if necessary the switch.	
	b. Function of clamp switches left or right wrong. Signal RTO	b. Check switch functions, wiring, adjustment, replace if necessary the switches.	
	c. Start conditions wrong on SS.	c. Replace SS.	
	d. Start/stop switch S1 function on operators-panel wrong measure SBU/SBD	d. Check switch S1 and/or replace this.	
	e. Wiring defect in electronic box to plug P2	e. Check wiring.	
	f. Plug P2 defect of loose	f. Check connecting plug.	
	g. Signal POC constantly active. measure this on LCE	g. Replace LCE	
	h. For P142/143-P460-P400 interface signal for releasing the statue is not active in parallel with RTO	h. Check interface Replace, if necessary, IC.	
2. Spindle does not start. Start/stop indicator lights.	a. +24V not present.	a. Check and/or replace fuse F3.	
	b. PME* on LCE does not become active	b. Replace LCE	
	c. Relay RL1, in power-on unit, defective	c. Replace RL1.	
	d. Relay RL2, in power-on unit, defective	d. Replace RL2.	
	e. Drive belt defective or run off pulley	e. Check drive belt and/or replace.	

SYMPTOM	PROBABLE CAUSE	REMEDY	REFERENCE
	f. Connections to pack-motor defective.	f. Check connections.	
	g. Drive motor defective or blocked.	g. Check the motor.	
	h. Spindle of cartridge blocked.	h. Check spindle and/or cartridge.	
3. After stopping, EXC already lights while spindle still turns.	a. Brake voltage absent, through defect in RF3.	a. Replace RF3.	
	b. Relay RL2 defective.	b. Replace RL2.	
	c. Connection from transformer to diode RF3 defective.	c. Check connections.	
	d. Signal DPM* on LCE and/or PMD* wrong.	d. Measure signals and/or replace LCE.	
4. Spindle does start start/stop indicator does not light.	a. Lamp on operators panel defective.	a. Replace lamp.	
	b. +12V not present, fuse F4 defective.	b. Replace fuse F4.	
	c. Driver on LCE defective measure the signals START and START*.	c. Replace LCE.	
	d. Plug P2 defective or loose.	d. Check P2.	
	e. Wiring to and from P2 wrong.	e. Check wiring.	

SYMPTOM	PROBABLE CAUSE	REMEDY	REFERENCE
5. After pushing in start button, immediate FAULT.	a. -12V not present fuse F2 defective.	a. Check and/or replace F2.	
	b. + 5V circuit on PA defective	b. Replace PA.	
	c. 50 HzW out of order	c. Replace LCE.	
	d. Signal STHE active	d. Replace WI.	
	e. Signal UNS on HUP defective	e. Replace HUP.	
	f. Signal ELER of WC constantly active	f. Replace WC.	
	g. Signal SD' from SS active	g. Replace SS.	
6. After stopping, The EXC indicator does not light after 30 sec. (60 Hz version 25 sec.)	a. Lamp on operators panel defective	a. Replace lamp.	
	b. EXC* on LCE defective driver	b. Replace LCE.	
	c. Signal EXC' from SS not active.	c. Replace SS.	
	d. Plug P2 defective or loose	d. Check Plug P2	
7. After stopping, the cartridge is not removable, because clamp on the right is blocked.	a. See Power On, point 7		

SYMPTOM	PROBABLE CAUSE	REMEDY	REFERENCE
8. During starting of the spindle, strange noise present.	a. Cartridge wrongly installed.	a. Check cartridge-holder and spindle seating.	
	b. Disk rubs against cartridge, defective lock on the cartridge itself	b. Repair lock or replace cartridge.	
	c. Bearing of the spindle defective	c. Replace spindle.	
	d. Bearing of the motor defective	d. Replace the drive motor.	
	e. Drive belt damaged	e. Replace drive belt.	
9. "Stop" during normal operation	a. Motor runs too sluggish	a. Check clearance and/or replace.	
	b. Spindle turns too sluggish	b. Check clearance and/or replace.	
	c. Drive belt defective	c. Check drive belt and/or replace.	
	d. Motor becomes overheated	d. Wait until motor is cooled down and try once again.	

SYMPTOM	PROBABLE CAUSE	REMEDY	REFERENCE
1. Cleaning cycle does not start	a. Timing counter on HUP does not start. Signal TC8 does not become active.	a. Replace HUP. See also First Seek 1.a.	
	b. Signal 50 Hz from LCE not present, or defective relay driver.	b. Replace LCE	
	c. Signal CME on SS not active.	c. Replace SS.	
	d. Relay RL3 in power on unit defective	d. Replace RL3.	
	e. Cleaning motor defective	e. Check and/or replace cleaning motor.	
	f. Switch S1 on cleaning unit defective	f. Replace micro switch S1.	
	g. Wiring defective	g. Check wiring.	
2. Cleaning cycle does not stop.	a. See Power On, point 4.		
	b. Signal TC 10 11 on HUP does not become active.	b. Replace HUP.	
3. Brushes are damaged.	a. Height alignment of the cleaning brushes wrong.	a. Replace the brush assy and adjust the height.*	
	b. Brush assy arms not parallel (bent).	b. Replace the brush assy.*	

* Check in both cases, whether cartridge or fixed disk, is damaged.

SYMPTOM	PROBABLE CAUSE	REMEDY	REFERENCE
1. First seek does not start.	a. Timing counter on HUP does not start. signal TC 8 and/or TC 11 12 does not become active.	a. Replace HUP See also CLEANING CYCLE 1-a.	
	b. Signal 50Hz from LCE not present	b. Replace LCE.	
	c. Signals TCZO'/FSF wrong	c. Replace SS.	
	d. Defect on PA	d. Replace PA.	
	e. Fault in servo electronics DA or VX.	e. Check servo signals check control, replace, if necessary, DA and/or VX and adjust once more.	
	f. Power transistor on heat sink defective - in case of constant EMB - in case of non energizing	f. Check and/or replace power transistor. - replace T5 - replace T3 and/or T4.	
	g. Connection to voice coil defective	g. Check connection.	
	h. Plug P1 loose or defective	h. Check P1.	
2. First seek does not start, after 60 sec. (50 Hz) resp. 50 sec. (60Hz) unsafe.	a. Index transmitter of the fixed disk defective	a. Replace transmitter.	
	b. Index circuit on LCE defective signal ISPF not present	b. Replace LCE.	
	c. Pulse separator on SS does not work. SPF not present	c. Replace SS.	

SYMPTOM	PROBABLE CAUSE	REMEDY	REFERENCE
	d. Lock magnet on the positioner or supply voltage to same not present	d. Check lock magnet and circuit R18 - C4 - C7. See also Power On, point 8.	
	e. Signal DFF on DC not active	e. Replace DC.	
	f. Plug P3 on back panel or PE to transmitter loose.	f. Check these plugs.	
	g. Carriage of positioner is in some way blocked	g. Check clearance of carriage.	
	h. Motor does not start fast enough, one of the starting capacitors defective	h. Check capacitors and/or motor.	
	i. Relay RL3 does not switch on the starting capacitor	i. Replace RL3.	
	j. Spindle turns too sluggish	j. Scheck spindle or replace.	
3. First seek finished but (USA 2)	a. Optical zero indicator (signal OPZ*) defective	a. Replace transmitter and adjust.	
	b. Adjustment OPZ wrong	b. Adjust OPZ indicator.	
	c. Signal MNC not present on VX	c. Replace VX and adjust.	
	d. CON not present on HUP	d. Replace HUP.	
	e. Signal TRZ or timing CDS wrong.	e. Replace SS.	
	f. Meander signals wrong: sin X-cos X-AC-A12--OTP-ETP.	f. Check appropriate signals on WI and replace, if necessary, meander card and/or WI.	

SYMPTOM	PROBABLE CAUSE	REMEDY	REFERENCE
	g. Plug P4 defective or partly loose.	g. Check plug P4.	
	h. Adjustment servo-loop not entirely correct.	h. Check adjustment and/or adjust.	
4. First seek correctly finished but no CON on the interface.	a. No output signal CON* on card IC.	a. Replace IC.	
	b. No CON on HUP.	b. Replace HUP.	
	c. Wiring of back panel.	c. Check wiring.	
	d. Defect on card WI.	d. Replace WI and adjust meander signal COS X.	
5. After fi st seek UR, indicator does not light and/or no UR on interface.	a. Driver on LCE defective signals UR and URI*'.	a. Replace LCE.	
	b. Signal UR from SS not active.	b. Replace SS.	
	c. Signal UR*' on IC not active.	c. Replace IC.	
	d. Lamp UR indicator on operator panel defective.	d. Replace lamp.	
	e. Wiring from back panel to interface plug PI defective.	e. Check wiring.	

SYMPTOM	PROBABLE CAUSE	REMEDY	REFERENCE
6. After first seek no index pulses and/or sector-pulses from resp. fixed disk or cartridge on interface.	a. Defective IC-Card Check signals: IPC-IPF-SPC-SPF	a. Replace IC.	
	b. No signals from SS- (IPC-IPF-STC-SPF)	b. Replace SS.	
	c. Wiring from back panel to interface plug PI defective	c. Check wiring.	

SYMPTOM	PROBABLE CAUSE	REMEDY	REFERENCE
1. Positioning action does not start.	a. Defec ive interface-signals. AB2-AB5-CTS	a. Measure these signals Replace IC.	
	b. Functions on DC defective	b. Replace DC.	
	c. Recoverable error USA1	c. Check DA/WI/VX and/or adjust servo loop once more.	
	d. No CON from HUP	d. Replace HUP.	
	e. Wrong commands from CU	e. Check signals on interface.	
	f. Wiring from plugs of the back panel to the interface plug PI defective	f. Check wiring.	
2. Positioning errors (USA 1).	a. Max. speed on DA adjusted too high	a. Lower max. speed DA 1 CW.	
	b. Position control loop wrongly adjusted. VX 1 and VX 2	b. Check adjustment servo positioner.	
	c. Speed loop wrongly justed. VX 3 and DA 1 if necessary, "offset" with DA 2.	c. Check the adjustment of the servo - positioner.	
	d. Adjustment meander-signals wrong	d. Adjust meanders.	
	e. CON circuit on HUP defective	e. Replace HUP.	
	f. Defect on one of the servo cards DA/WI/VX	f. Replace one of these cards and adjust servo loop again.	
	g. Output speed transducer too low, measure speed signal on DA	g. Replace speed transducer and/or magnet rod.	
	h. Defect on PA	h. Replace PA	

SYMPTOM	PROBABLE CAUSE	REMEDY	REFERENCE
3. Positioning to fault address.	a. One or more AB signals defective on interface card.	a. Replace IC.	
	b. Addresses, or counting on DC wrong	b. Replace DC.	
	c. Faulty commands from CU.	c. Check interface signals.	
	d. Wiring from back panel plugs to interface plug PI defective.	d. Check wiring.	
4. Every positioning action ends unsafe (FAULT) USA2.	a. Max. speed on DA adjusted too high.	a. Lower max. speed DA1 C.W.	
	b. Defect in unsafe circuit on PA; signals STL-STHE-EMB.	b. Replace PA.	
	c. One of the power transistors on the heat sink defective T1, T2 T3 or T4.	c. Check or replace transistors.	
	d. Counter/latches or full adder on DC defective.	d. Replace DC.	
	e. Adjustment servo-loop wrong or defect on DA/VX or WI.	e. Check adjustment and/or replace one of the cards DA/VX or WI.	
	f. Adjustment meander signals wrong.	f. Check adjustment.	
	g. Meander card defective (sin x and cos x).	g. Replace meander card.	
	h. Flat cable to primary meander broken	h. Check flat cable.	

SYMPTOM	PROBABLE CAUSE	REMEDY	REFERENCE
5. The positioner "whistles" after positioning.	a. Adjustment servo-loop wrong, viz., VX1 and VX2.	a. Check adjustment	
	b. Positioner works in one direction only, approx. half the current present (VPC*), because of defect in one of the power transistors T1, T2, T3 or T4.	b. Replace T1, T2, T3 or T4 on the heat sink.	
6. Positioning often ends with USA 1 (recoverable error)	a. Adjustment of servo-loop wrong and/or defect on DA/VX or WI-on VX signal MNC not active.	a. Check and/or adjust servo-loop.	
	b. Defect on HUP signals WTC and PONG.	b. Replace HUP.	

SYMPTOM	PROBABLE CAUSE	REMEDY	REFERENCE
1. Data fault on one address.	a. Bad spot on fixed disk and/or cartridge	a. Change fixed disk and/or cartridge, repeat.	
	b. Write error and/or check write amplifier	b. Start writing again.	
2. Data faults on one head.	a. Head dirty	a. Clean the head.	
	b. One side of fixed disk or cartridge damaged	b. Replace fixed disk or cartridge.	
	c. Poor contact of the head plug	c. Clean contacts of plug.	
	d. Head surface damaged	d. Replace the head.	
	e. Adjustment of head wrong (for head 0 or 1 only)	e. Adjust on CE-cartridge	
	f. Head defective wire rupture	f. Replace head.	
	g. Write error (WRDA')	g. Check WC andIC.	
	h. Selection fault	h. Replace DC or read preamplifier.	
3. Data faults on tracks 128 up to	a. Write/erase current wrong (WEV)	a. Check write voltage WEV and/or replace WC.	
	b. Signal RWC not active	b. Replace DC.	
	c. Read channel wrong RD 1/2 output pre-amplifier RDDA output read recovery RDDA* output interface card	c. Replace resp. the preamplifier-RR-	
	d. Positioning errors on high tracks	d. Check servo-loop	

SYMPTOM	PROBABLE CAUSE	REMEDY	REFERENCE
	e. Springs of the heads rub against the cam bridge	e. Carefully bend the head springs.	
	f. Ground contact spindle wrong	f. Repair or replace ground contact.	
4. Random data faults.	a. Read channel defective RD 1/2 output read preamplifier RDDA output read recovery RDDA output interface card	a. Check and/or replace RR-IC or read preamplifier.	
	b. Write channel defective WRDA'. output interface card write voltage WEV on WC.	b. Check or replace WC or IC.	
	c. Heads are dirty	c. Clean the heads.	
	d. Damaged or dirty cartridges and/or fixed disk	d. Replace or clean cartridge and/or fixed disk.	
	e. Contacts of head plugs dirty	e. Clean plugs.	
	f. Adjustment of the heads wrong head 0 and 1 only	f. Adjust the head on CE-cartridge.	
	g. Adjustment of index to burst wrong	g. Adjust on CE-cartridge	
	h. Ground contact spindle wrong	h. Repair or replace ground contact.	
	i. No index- resp. sector- pulses on interface	i. See First seek, point 6.	

SYMPTOM	PROBABLE CAUSE	REMEDY	REFERENCE
5. Only one of the heads reads correctly.	a. Diode leakage read preamplifier.	a. Replace read preamplifier	
6. No compatability	a. Adjustment heads 0 and 1 wrong.	a. Adjust heads on CE-cartridge.	
	b. Index to burst wrong	b. Adjust heads on CE-cartridge.	
	c. Zero point (0 P Z) wrong (displaced)	c. Check and/or adjust zero point correctly.	
	d. Alignment positioner wrong	d. Check alignment positioner.	

SYMPTOM	PROBABLE CAUSE	REMEDY	REFERENCE
1. Data in danger (DID)	a. Signal DID on HUP defective.	a. Replace HUP	
	b. Interface signals wrong, particularly for WRE-ERE and RE.	b. Replace IC.	
	c. Wrong interface signals from CU to CDD.	c. Check the signals on behalf of WRE-ERE-RE.	
2. Electronic error (ELER)	a. Check by means of signal ANER. Plural head selection Write without erase Both write drivers on etc.	a. Replace WC	
	b. Head circuit out off	b. Check head plug and head wiring. Replace head if necessary.	
	c. Defect of the resp. enable signals.	c. Replace HUP.	
	d. Commands for the enable signals from IC wrong.	d. Replace IC.	
	e. Faulty interface commands from CU to CDD.	e. Check interface.	
	f. Selection fault on read preamplifier	f. Replace read pre-amplifier.	
	g. Complete diode leakage (short circuit) on read preamplifier.	g. Replace read pre-amplitier.	
3. Speed drops (SD)	a. See FIRST SEEK, point 2.		
4. Positioner is not on track 000 (PONO).	a. See FIRST SEEK, point 3.		

SYMPTOM	PROBABLE CAUSE	REMEDY	REFERENCE
5. Speed too high electronic (STHE).	a. Signal STHE constantly active	a. Replace WI.	
	b. Adjustment servo-loop not correct	b. Check adjustment.	
	c. Defect on PA	c. Replace PA.	
	d. See also POSITIONING, point 4		
6. Seek too long (STL)	a. See FIRST SEEK, point 2d.		
	b. Positioner carriage somehow mechanically blocked	b. Check and/or repair the clearance of the positioner.	
	c. Counter or timing on HUP incorrect (signal TC 07)	c. Replace HUP.	
	d. See POSITIONING point 4.		
7. Immediately after starting the FAULT indicator lights.	a. See START/STOP, point 5.		
8. After power on FAULT lights immediately.	a. See POWER ON, point 10		

Cartridge Disk Drive Unit

Vol. VIII: Parts List



Data Systems

LOCATOR

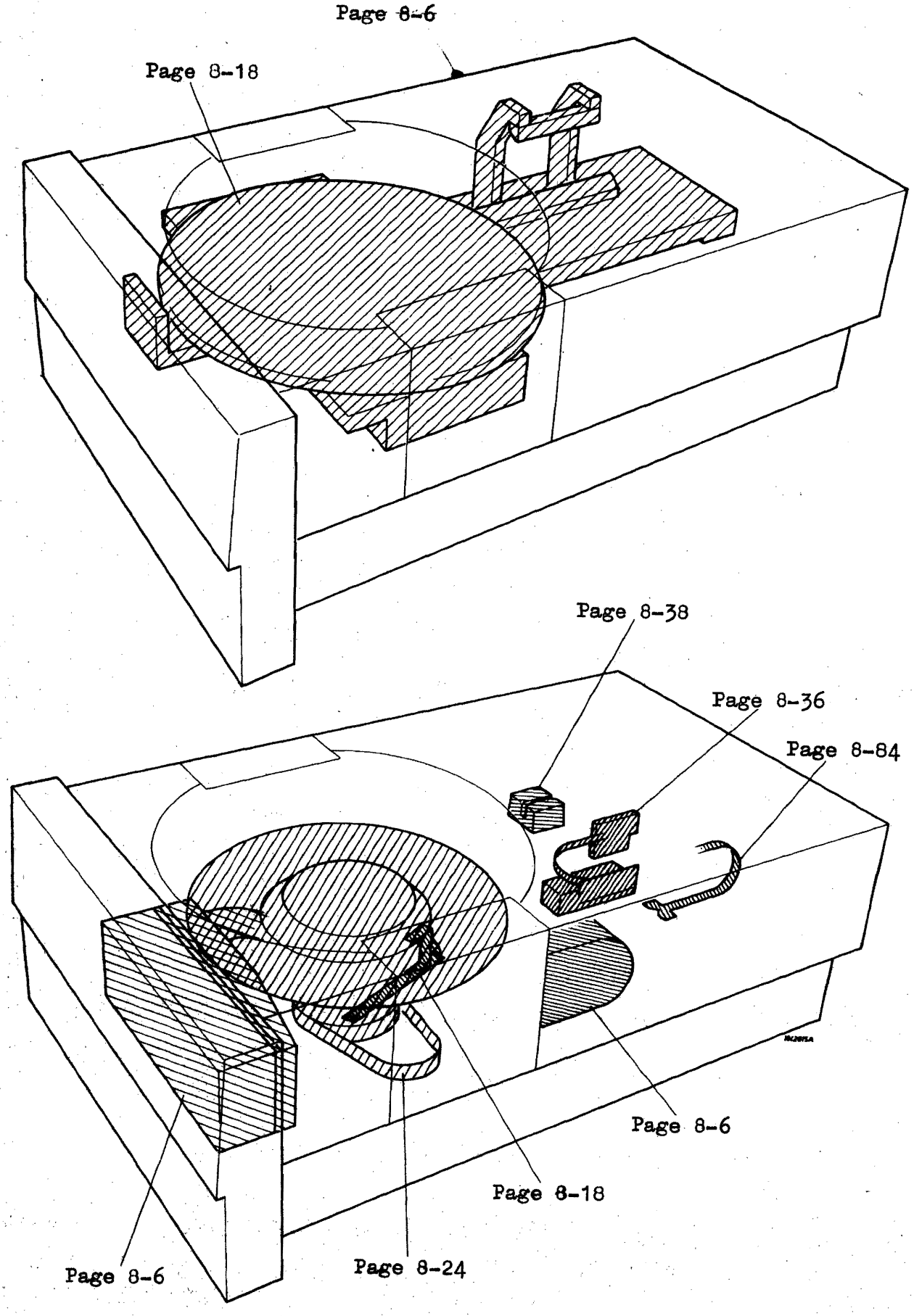
Page 8-6
Page 8-18
Page 8-38
Page 8-36
Page 8-84
Page 8-6
Page 8-18
Page 8-24
Page 8-6

LOCATOR

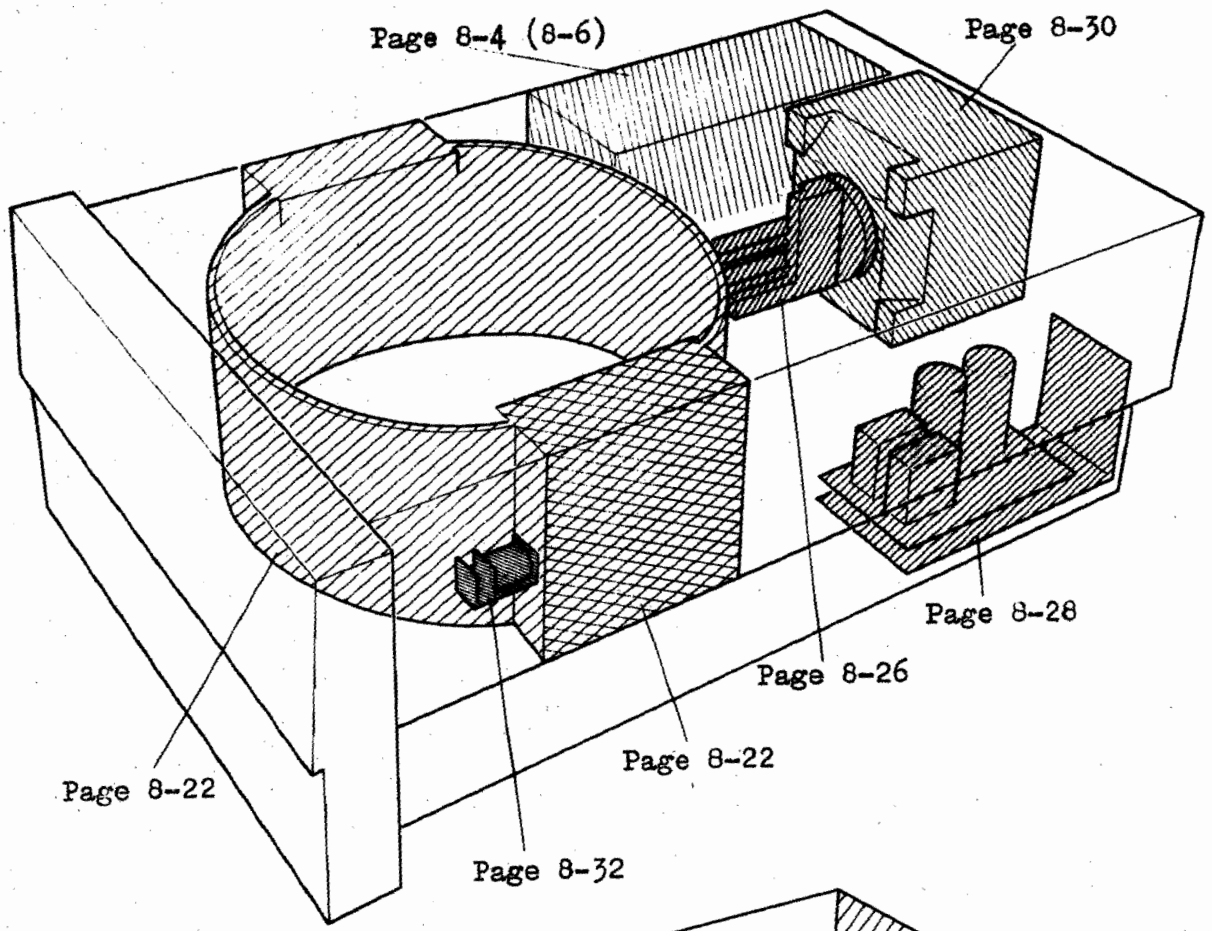
Page 8-4 (8-6)
Page 8-30
Page 8-28
Page 8-26
Page 8-22
Page 8-22
Page 8-32

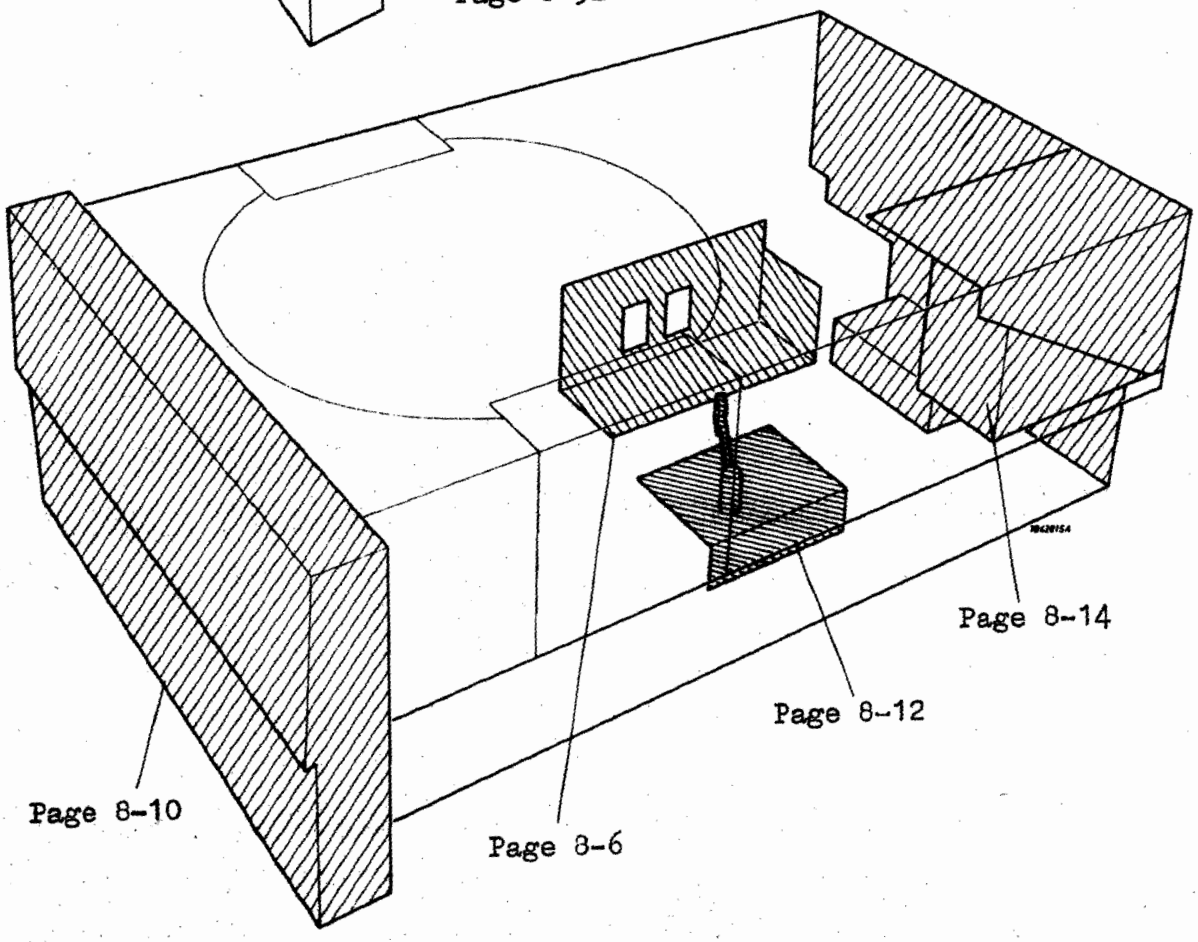
Page 8-14
Page 8-12
Page 8-10
Page 8-6

CARD LAY-OUT CDD 002 PH. 1

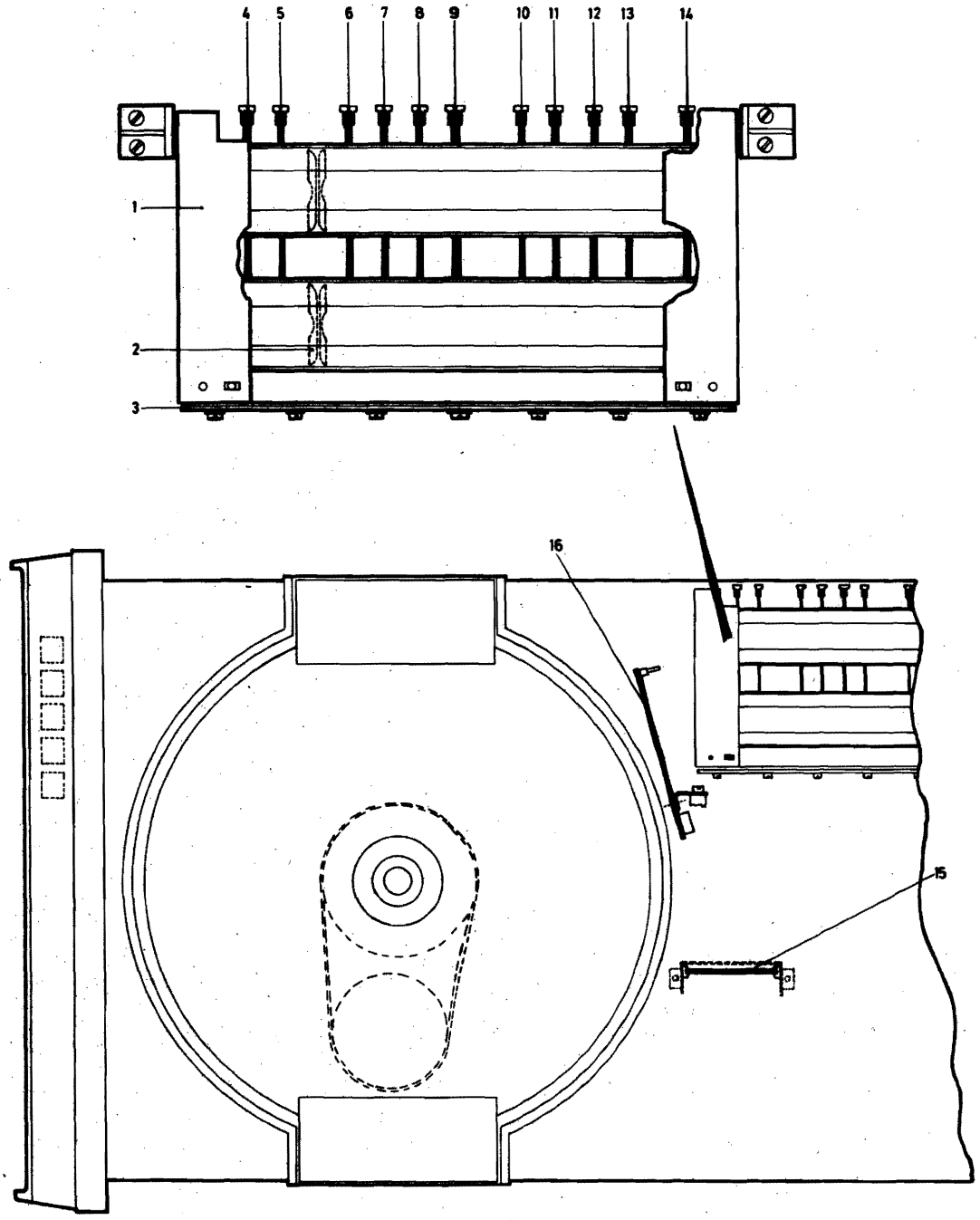

Item nr	Part number	Description	Qty. per ass'y
A	5122 299 13700	Final assembly, CDD 002 PH. 1	1
1C	5122 289 96050	Rack, boards	1
2C	4322 026 70040	Card guide	52
3B	5122 289 98170	Rear board, wired	1
4B	5122 289 97850	P.C.B.A. 1A24, see page 8-78	1
5B	5122 289 95930	P.C.B.A. 1M63, see page 8-52	1
6B	5122 289 96790	P.C.B.A. 2L00, see page 8-56	1
7B	5122 289 96780	P.C.B.A. 1L99, see page 8-64	1
8B	5122 289 96740	P.C.B.A. 1M66, see page 8-74	1
9B	5122 289 96750	P.C.B.A. 1L97, see page 8-46	1
10B	5122 289 96750	P.C.B.A. 1M67, see page 8-48	1
11B	5122 289 96770	P.C.B.A. 1L98, see page 8-44	1
12B	5122 289 96730	P.C.B.A. 1M65, see page 8-58	1
13B	5122 289 96720	P.C.B.A. 1M64, see page 8-66	1
14B	5122 289 96710	P.C.B.A. 1A22, see page 8-60	1
15B	5122 282 51550	P.C.B.A. Meander, see page 8-50	1
16B	5122 289 96440	P.C.B.A. Read Preamplifier, see page 8-40	1
-	5122 289 97290	P.C.B.A. Power supply, see page 8-70(8-14)	1
-	5122 289 96480	P.C.B.A. Driver, see page 8-82(8-14)	1

FINAL ASSEMBLY

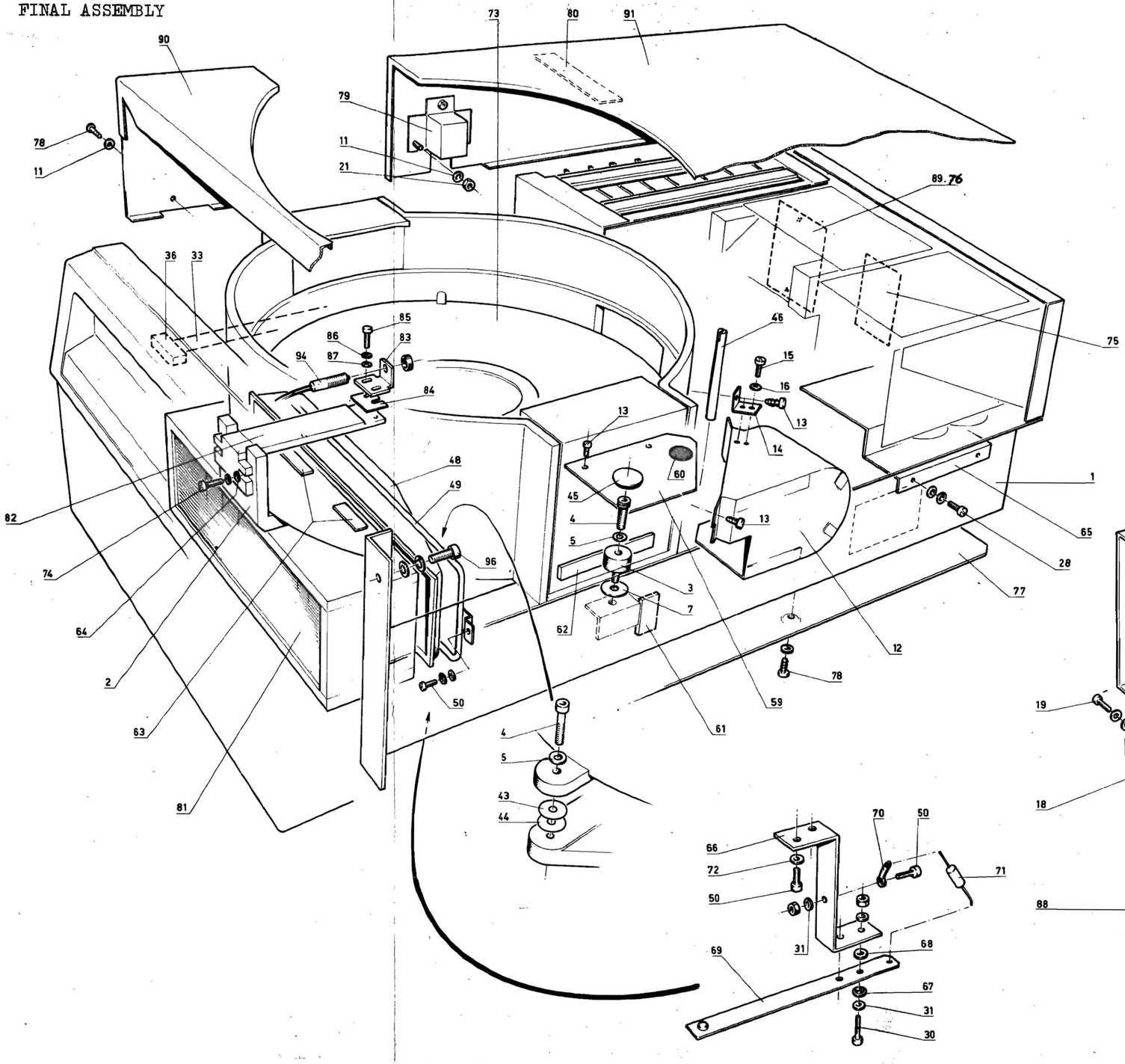

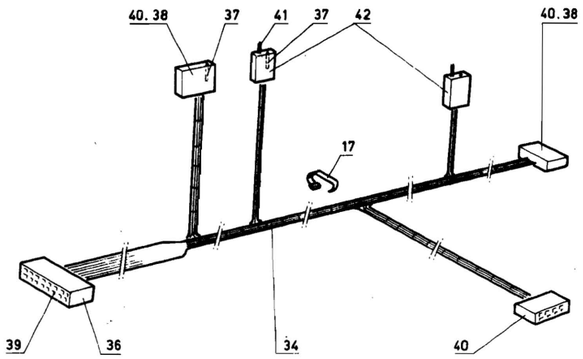

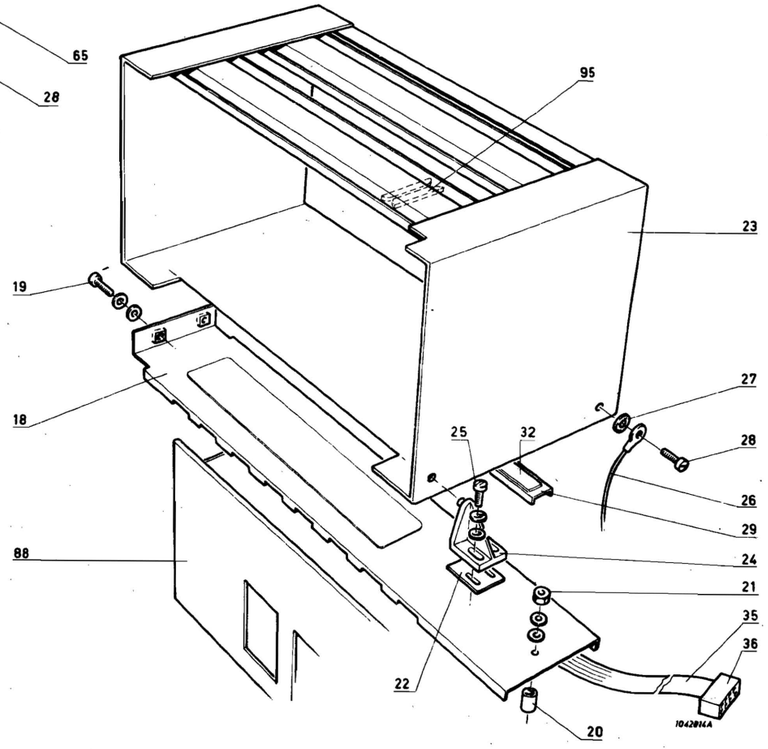

Item nr	Part number	Description	Qty. per ass'y
A	5122 299 13700	Final assembly	1
B	5122 299 08800	Main assembly	1
1C	5122 289 97520	Frame assembly	1
2C	5122 299 08900	Basic plate	1
3C	2622 890 11312	Buffer	2
4C	2522 006 03054	Socket screw	5
5C	2522 600 16147	Washer 4 x 12.5	6
6C	2522 006 03059	Allen screw M 6 x 40	1
7C	2522 600 16036	Washer 6.4 x 18	6
8C	2522 609 02006	Pressure washer 6.2 MM	3
9C	2522 600 27044	Washer 10.5 x 21 x 2.5	1
10C	2522 032 64124	Screw M 4 x 10	2
11C	2522 600 16026	Washer 4.3 x 9	28
12C	5122 289 97190	Return housing	1
13C	2522 163 01023	Self-tapping screw 6N x $\frac{1}{4}$"	5
14C	5122 200 44010	Bracket	1
15C	2522 004 02039	Screw M4 x 8	3
16C	2522 613 03009	Washer 4.1 x 7.1	12
17C	2422 015 05037	Binding wire	4
18C	5122 289 97490	Sheet	1
19C	2522 004 02041	Screw M4 x 10	2
20C	2522 627 04045	Spacer	1
21C	2522 401 60011	Nut M4	13
22C	5122 200 44850	Sheet	2
23C	5122 289 96050	Electronics box	1
24C	5122 203 21100	Hinge block	2
25C	2522 004 02042	Screw M 4 x 12	4
26C	5122 289 97230	Earth lead	2
27C	2522 608 02001	Washer 3.2 x 6	3
28C	2522 004 02024	Screw M 3 x 6	6
29C	5122 200 38410	Relief bracket	1
30C	2522 004 02026	Screw M 3 x 10	6
31C	2522 600 16017	Washer 3.2 x 7	14
32C	0822 086 24001	Self-adhesive strip long 0.3 m	1
33C	5122 289 96870	Cable P2	1
34C	5122 289 96830	Cable P3	1
35C	5122 289 96840	Cable P8	1
36C	2422 034 10794	Connector 20 pins	6
37D	2422 034 10789	Socket connector	52
38D	2422 034 10803	Position key	10
39D	2422 034 10788	Socket connector	54
40D	2422 034 10908	Connector 6 pins	3
41D	2422 034 10913	Contact pin	20
42D	2422 034 10797	Connector 2 pins	2
43C	5122 200 16800	Spacer ring 0.1 mm	6
44C	5122 233 11100	Spacer ring 0.2 mm	12
45C	2412 015 09064	Stop 15.6 x 20	2
46C	5122 200 39670	Guide pin	1
47C	2522 613 03005	Spring ring 3.1 x 5.7	6
48C	5122 289 87580	Intake house	1

FINAL ASSEMBLY

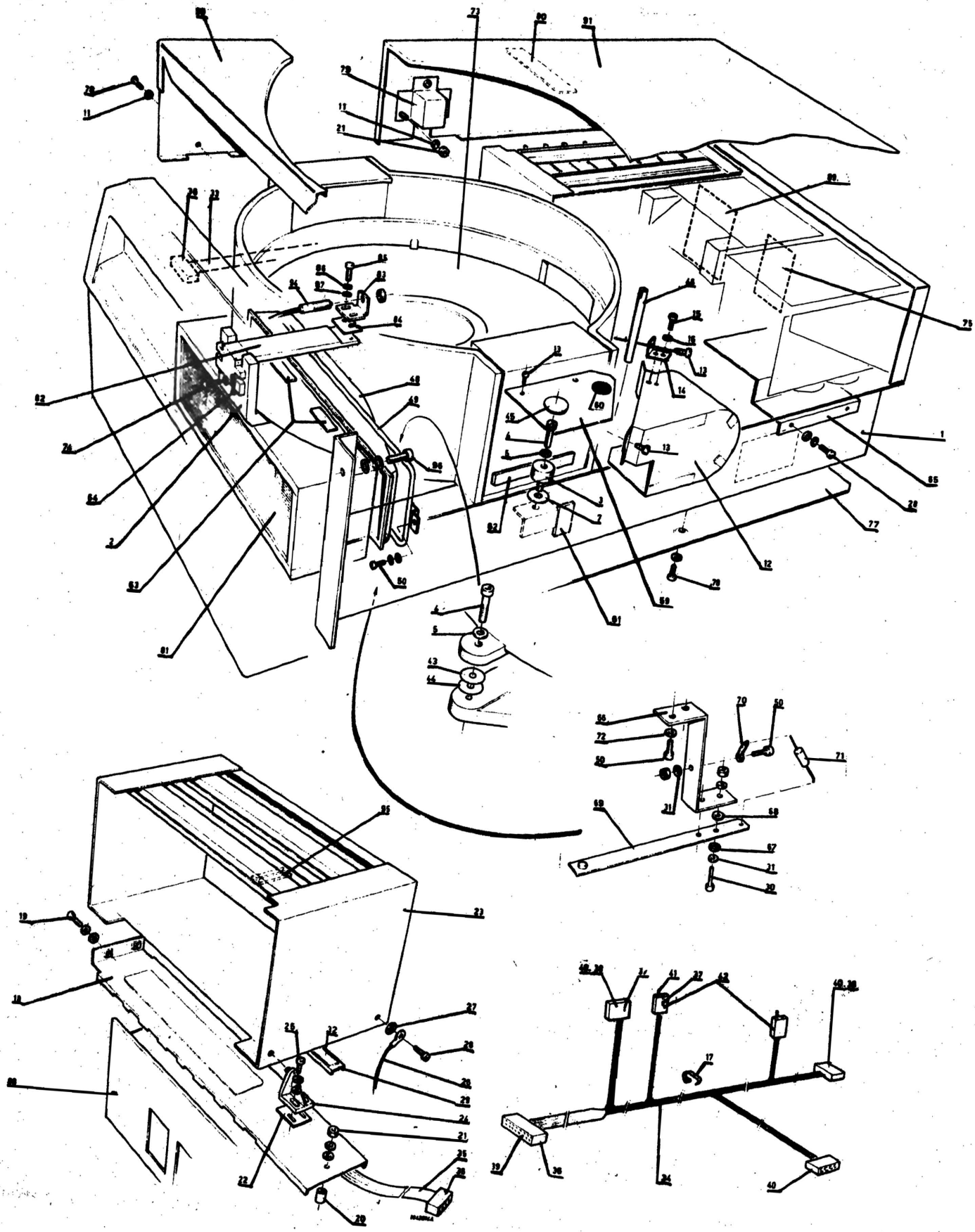

Item nr	Part number	Description	Qty. per ass'y
49C	5122 289 87600	Pressure plate	1
50C	2522 004 02025	Screw M 3 x 8	2
51C	5122 200 44150	Sticker plugs	1
52C	5122 200 43240	Sticker final assembly	1
53C	2822 100 23219	Sticker	1
54C	5122 200 46370	Sticker	1
55C	2522 004 02052	Screw M 5 x 6	
56C	2522 613 01012	Spring ring 5.1 x 8.8	1
57C	2522 608 02003	Earth ring 5.3 x 10	1
58C	2522 608 02002	Earth ring 4.3 x 8	1
59C	5122 200 45440	Sealing sheet	1
60C	5122 200 13020	Damping sheet	1
61C	2422 015 05129	Cable clamp ZET 0375.5	1
62C	0822 081 44003	Foam rubber strip 70 x 10 x 3 mm	2
63C	5122 200 48880	Rubber strip	2
64C	2522 600 16027	Washer 4.3 x 12	5
65C	5122 289 98780	Screening plate	1
66C	5122 200 38420	Bracket	1
67C	9390 000 40112	Insulation bush	2
68C	2522 600 28026	Washer paper 4.3 x 9	2
69C	5122 289 94050	Contact spring	1
70C	2422 015 01002	Solder tag M 3	1
71C	2322 152 51002	Resistor 1K 1% $\frac{1}{4}$W	1
72C	2522 600 16018	Washer 3.2 x 9	2
73C	5122 289 89340	Bottom	1
74C	2522 004 02045	Screw M 4 x 20	3
75C	5122 010 82113	Sticker	1
76C	3522 074 08150	Breaking screw M 2.5	2
77C	5122 200 36930	Bottom plate	1
78C	2522 163 01025	Tap screw 6 N x 9.5	10
79C	5122 200 26000	Screening cap	2
80C	1222 100 98258	Self adhesive foam rubber 0.06 m^2	1
81C	5122 021 00231	Air filter	1
82B	5122 200 37660	Bracket for Index	1
83B	5122 289 97050	Support for Index	1
84B	5122 200 37670	Spacer	8
85B	2522 004 02027	Screw M 3 x 12	2
86B	2522 600 16017	Washer 3.2 x 7	2
87B	2522 613 03005	Spring ring 3.1 x 5.7	2
88B	5122 289 98000	Connecting cable	1
89B	5122 289 97340	Indication sticker	1
90B	5122 290 05220	Front cover	1
91B	5122 290 05230	Rear cover	1
92B	5122 200 43430	Decorative strip	1
93B	5122 200 43440	Numbering plate	1
94D	5122 289 97540	Pick up assembly	1
95C	4322 026 70040	Card guide	52
96C	2522 032 64207	Bolt M 6 x 10	4

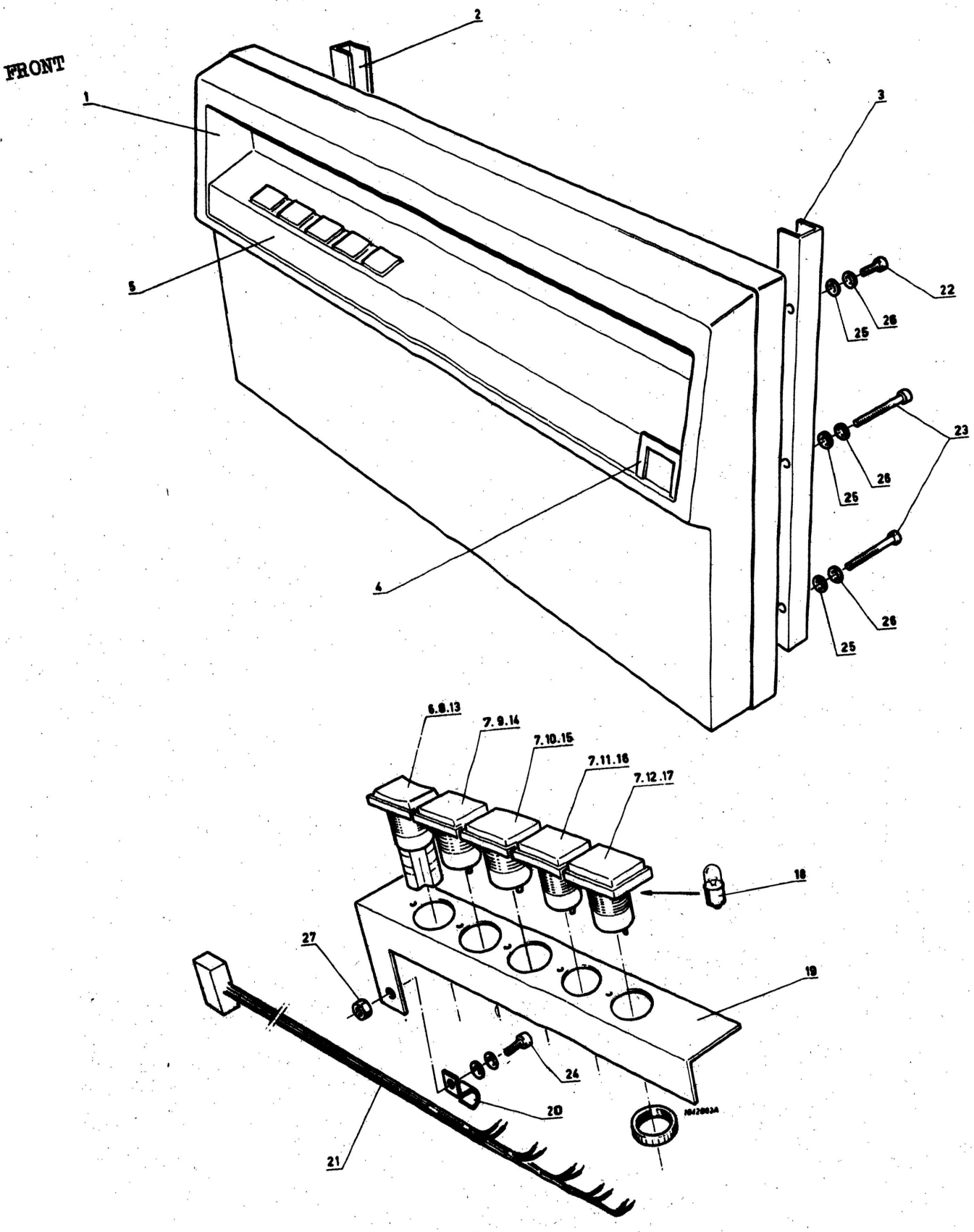
FRONT
1
2
3
4
5
22
23
25
26
6.8.13
7.9.14
7.10.15
7.11.16
7.12.17
18
19
20
21
24
27

7405

X1215

Item nr	Part number	Description	Qty. per ass'y
A	5122 299 13700	Final assembly	1
1B	5122 200 35750	Front	1
2B	5122 289 95500	Fixing beam, left	1
3B	2522 289 95490	Fixing beam, right	1
4B	5122 200 35830	Holder	1
5B	5122 289 96430	Ornamental strip, assy	1
6C	2432 121 00054	Push button switch	1
7B	2432 470 00055	Lamp holder	1
8C	2432 471 00119	Lens cap, transparent	1
9C	2432 471 00115	Lens cap, red	1
10C	2432 471 00114	Lens cap, transparent	1
11C	2432 471 00116	Lens cap, yellow	1
12B	2432 471 00115	Lens cap, red, 31 - 903	1
13C	5122 200 33760	Text plate, start-stop	1
14C	5122 200 35810	Text plate, power	1
15C	5122 200 35820	Text plate, ready	1
16C	5122 200 33810	Text plate, cart. exch.	1
17C	5122 200 33820	Text plate, fault	1
18C	9236 669 18300	Lamp, Type 386, 14V - 80mA	5
19C	5122 200 36360	Mounting strip	1
20C	2413 015 00139	Cable clamp	1
21C	5122 289 99020	Cableform, front	1
22B	2522 004 02041	Screw, M4x10	2
23B	2522 004 02049	Screw, M4x35	4
24C	2522 004 02025	Screw, M3x8	4
25B	2522 613 01009	Spring ring, 4,1 x 7,1	6
26B	2522 600 16026	Washer, 4,3 x 9	6
27C	2522 401 60008	Nut, M3	4

CLEANMECHANISM

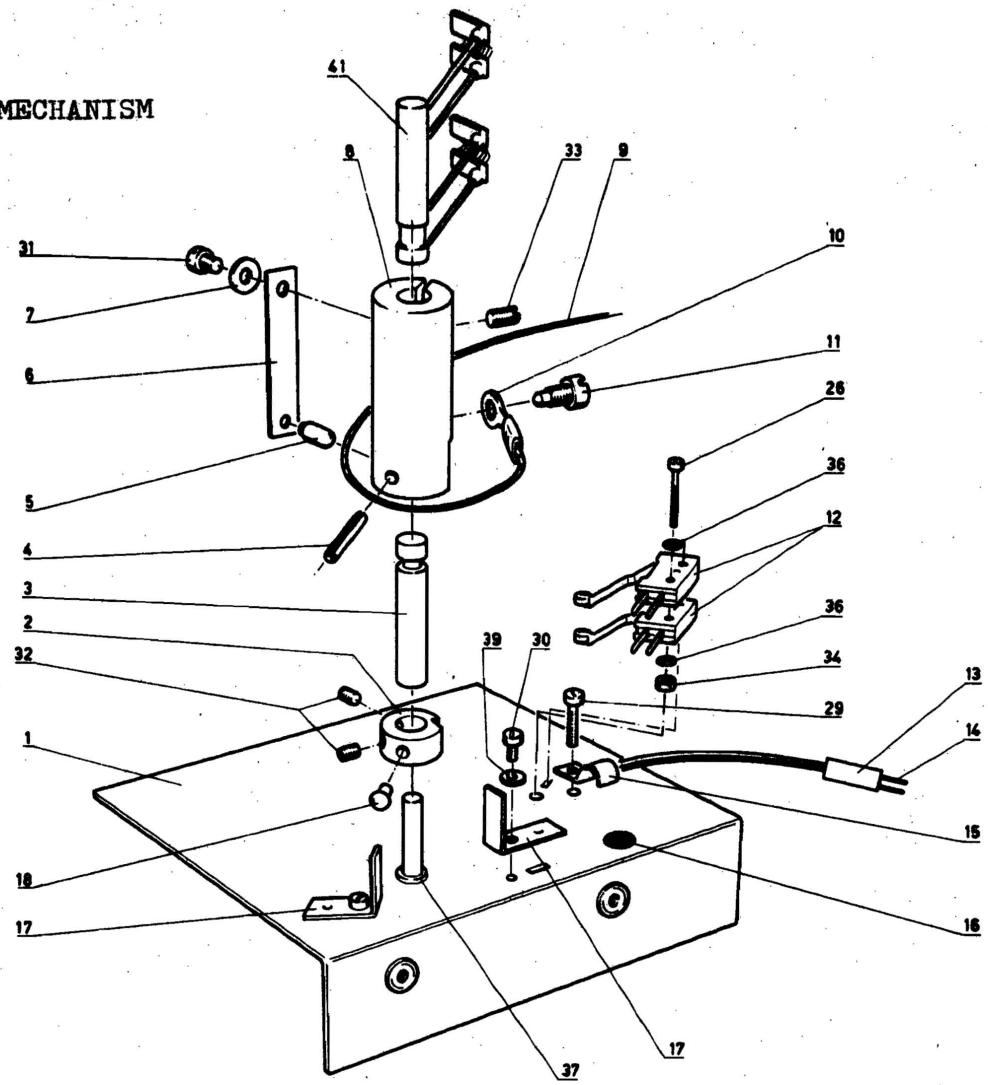

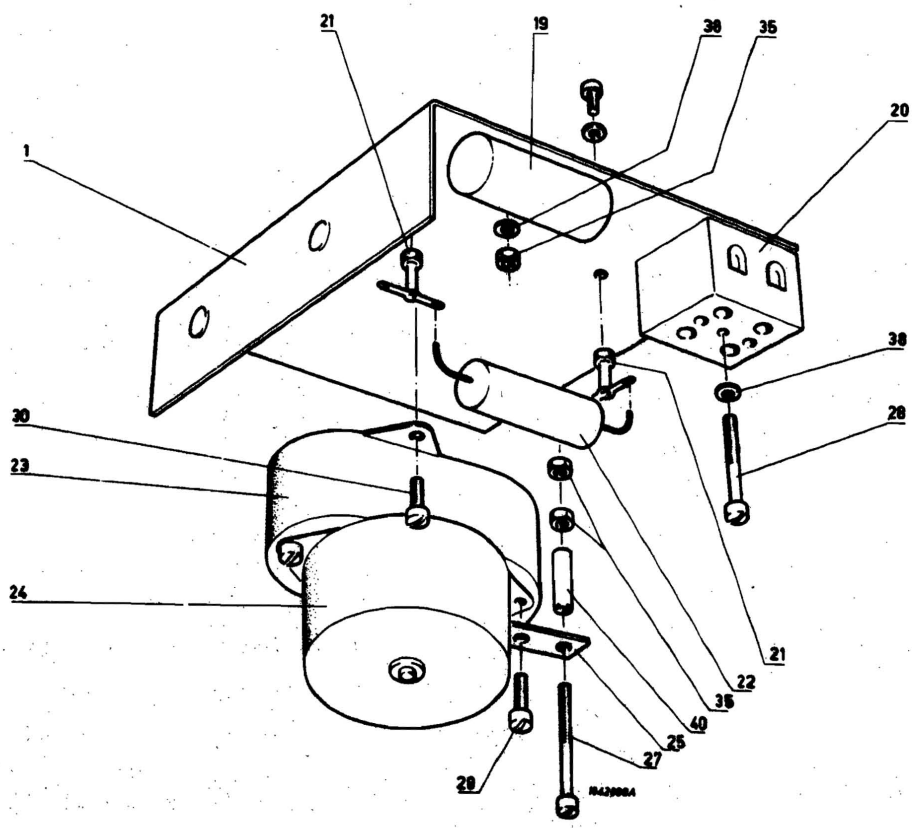

Item nr	Part number	Description	Qty. per ass'y
B	5122 299 08800	Main assembly	1
C	5122 289 88420	Cleanmechanism	1
1D	5122 200 18960	Bracket	1
2D	5122 200 18810	Adjusting ring	1
3D	5122 200 18720	Shaft	1
4D	2522 677 01045	Clamping bush	1
5D	5122 200 26850	Locking pin	1
6D	5122 200 26860	Spring flat	1
7D	5122 200 26880	Ring	1
8D	5122 200 18740	Coupling	1
9D	0122 135 03001	Steel wire with nylon imm. Ø, 0,15M	1
10D	2422 015 02156	Eye cable tag	1
11D	5122 200 26890	Locking screw	1
12D	2411 123 02077	Micro switch assy	2
13D	2422 034 10908	Connector housing	1
14D	2422 034 10913	Contact pin	4
15D	2413 015 00136	Cable clamp	1
16D	2422 015 09034	Crommet	1
17D	5122 200 26870	Stop bracket	2
18D	5122 200 26900	CAM	1
19D	2012 500 10002	Anti-interference capacitor	1
20D	2412 013 00021	Connecting block, 2 pins	1
21D	2413 015 00976	Mounting support	2
22D	2222 277 81563	Capacitor, 0,0056/uF	1
23D	9904 130 01016	Gear box, 125: 3	1
24D	9904 111 04131	Synchronous motor	1
25D	5122 200 26840	Adjusting plate	1
26D	2522 004 02009	Screw, M2x20	2
27D	2522 004 02033	Screw, M3x30	1
28D	2522 004 02031	Screw, M3x20	1
29D	2522 004 02025	Screw, M3x8	2
30D	2522 004 02022	Screw, M3x4	4
31D	2522 004 02037	Screw, M4x5	1
32D	2522 043 02038	Adjusting screw, M3x5	2
33D	2522 043 02047	Adjusting screw, M4x5	1
34D	2522 401 60005	Nut, M2	2
35D	2522 401 60008	Nut, M3	4
36D	2522 600 16151	Washer, 2,2x5	4
37D	2522 600 55116	Washer, nylon, 4,3 x 9 x 1	1
38D	2522 600 16016	Washer, 3,2 x 6	1
39D	2522 600 16017	Washer, 3,2 x 7	2
40D	2522 627 01023	Distance piece, 3,1 x 5 x 12	1
41C	5122 289 88410	Brush shaft, assy	1

FRAME

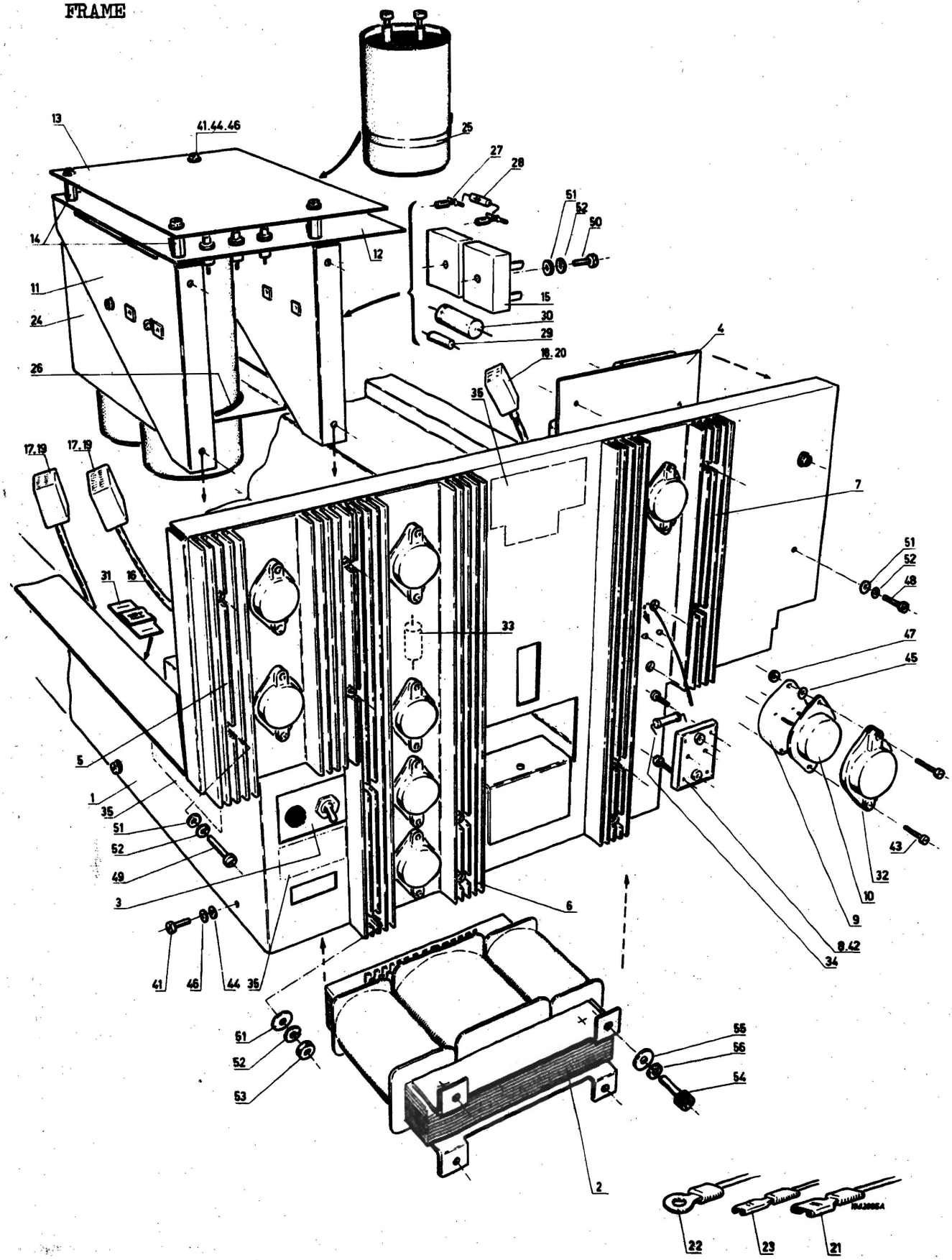
13
41.44.46
25
27
28
51
52
50
14
12
11
15
24
30
29
4
26
18.20
35
17.19
17.19
7
51
52
48
31
16
33
47
45
5
1
35
51
52
49
3
43
32
10
9
8.42
34
6
41
46
44
36
51
52
53
55
56
54
2
22
23
21

Item nr	Part number	Description	Qty. per ass'y
B	5122 299 08800	Main assembly CDD	1
C	5122 289 97520	Frame	1
D1	5122 289 96880	Frame	1
D2	3522 815 75900	Transformer TC 962/9	1
D3	5122 289 96910	Switching unit	1
D4	5122 289 97290	PCBA Power supply	1
D5	5122 200 37900	Heat sink no. 1	1
D6	5122 200 37910	Heat sink no. 2	1
D7	5122 200 37920	Heat sink no. 3	1
D8	4022 107 11260	Transistor path	8
D9	9390 000 50112	Mica plate	8
D10	9330 226 60112	Transistor 2N3442	8
D11	5122 289 97200	Bracket	2
D12	5122 289 96480	PCBA driver	1
D13	5122 200 38310	Insulating plate	1
D14	5122 200 38320	Spacer	4
D15	9332 351 50682	Bridge rectifier G 775-2	2
D16	5122 289 97530	Cable, back plate	1
D24	5122 290 03290	Supporting plate	1
D25	2422 015 05006	Strip TX 15	1
D26	0822 026 98125	PVC sectional strip 7 mm Ø 0,4 m	1
D27	2413 015 00976	Mounting support	5
D28	9330 458 51113	Diode BYX 36	1
D29	2322 325 37101	Resistor, 100E 4W 5%	1
D30	2012 001 00207	Capacitor 100 /uF 63V	1
D31	2513 483 04014	Speed unit type SNU - 1219	12
D32	2412 490 00034	Insulating cap, TO3	8
D33	2122 256 00035	Resistor 0,5E 25W 1%	1
D34	2322 152 54642	Resistor 4 K ohm 0,25W 1%	4
D35	5122 200 43070	Identification label	1
D41	2522 004 02024	Screw M 3 x 6	6
D42	2522 004 02025	Screw M 3 x 8	18
D43	2522 004 02031	Screw M 3 x 20	16
D44	2522 600 16017	Ring 3,2 x 7	24
D45	2522 600 16018	Ring 3,2 x 9	16
D46	2522 613 03005	Washer 3,1 x 5,7	8
D47	2522 401 60008	Unit M3	2
D48	2522 004 02041	Screw M4 x 10	6
D49	2522 004 02042	Screw M 4 x 12	4
D50	2522 004 02043	Screw M 4 x 15	2
D51	2522 600 16026	Ring 4,3 x 9	14
D52	2522 613 03009	Washer 4,1 x 7,1	14
D53	2522 401 60011	Unit M4	8
D54	2522 006 03205	Allen screw M 5 x 10	4
D55	2522 600 16029	Ring 5,3 x 10	4
D56	2522 613 03012	Washer 5,1 x 8,7	4
E17	2422 034 10794	Connector housing 20 p	2
E18	2422 034 10908	Connector housing 6 p	1
E19	2422 034 10788	Contact socket 47439	38
E20	2422 034 10789	Contact socket 47565	6

FRAME

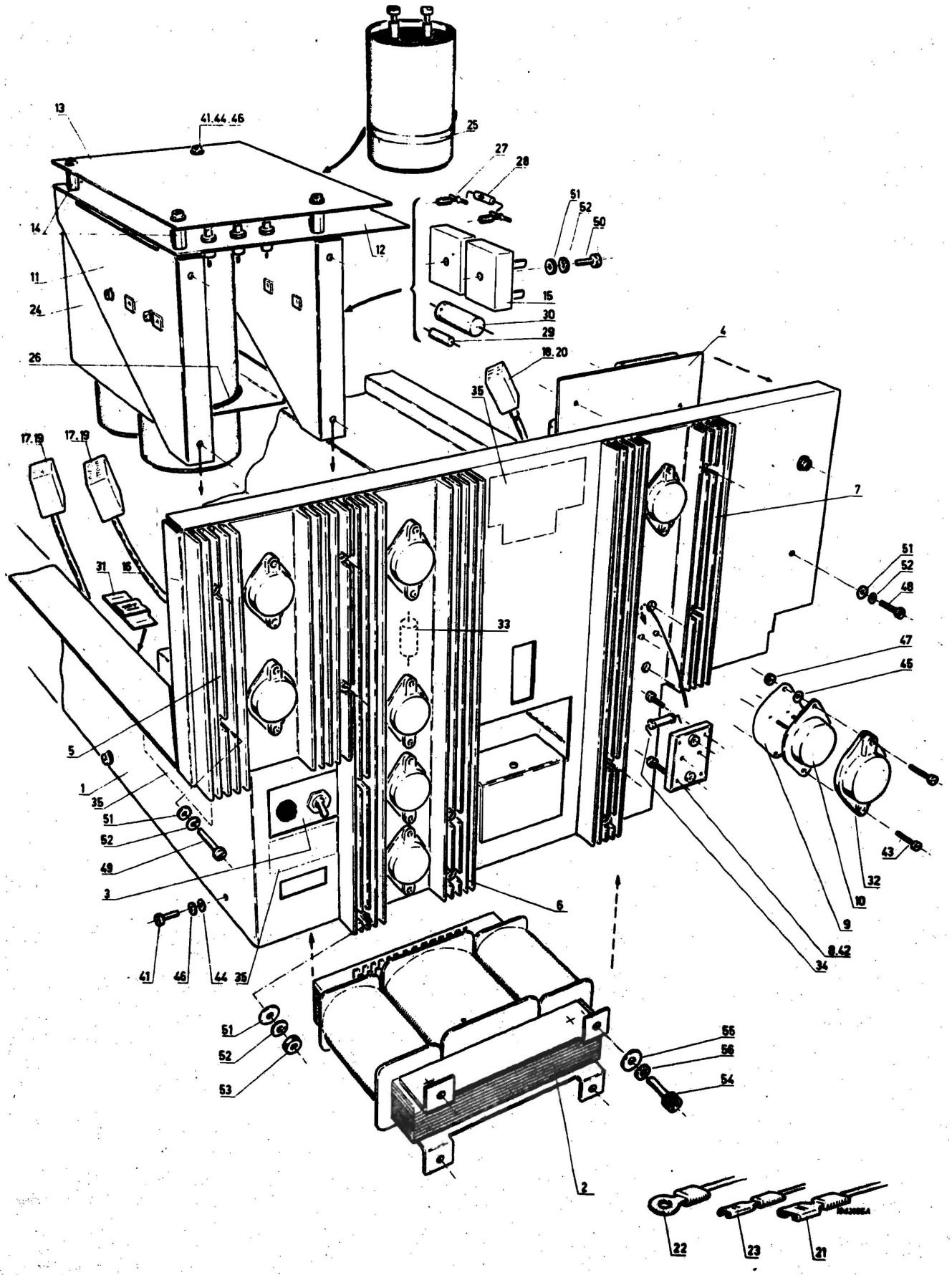
13
41.44.46
25
27
28
51
52
50
14
12
11
15
24
30
29
26
4
18.20
35
17.19
17.19
7
31
16
51
52
48
33
47
45
5
1
35
51
52
49
3
43
32
10
6
9
8.42
34
41
46
44
35
51
52
53
55
56
54
2
22
23
21

Item nr	Part number	Description	Qty. per ass'y
54D	2522 006 03205	Allen screw M5 x 10	4
55D	2522 600 16029	Ring 5,3 x 10	4
56D	2522 613 03012	Washer 5,1 x 8,7	4

DECK ASSEMBLY

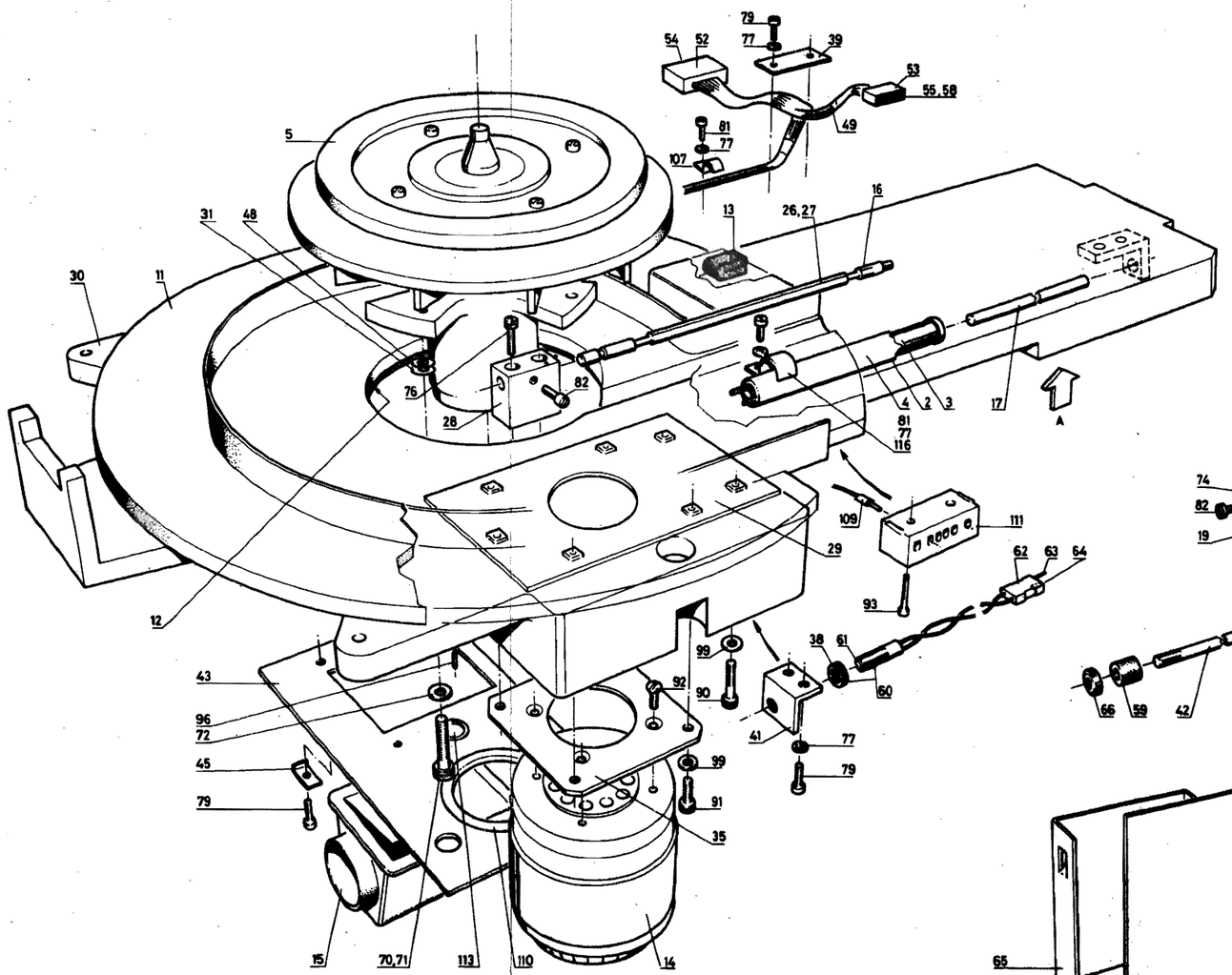

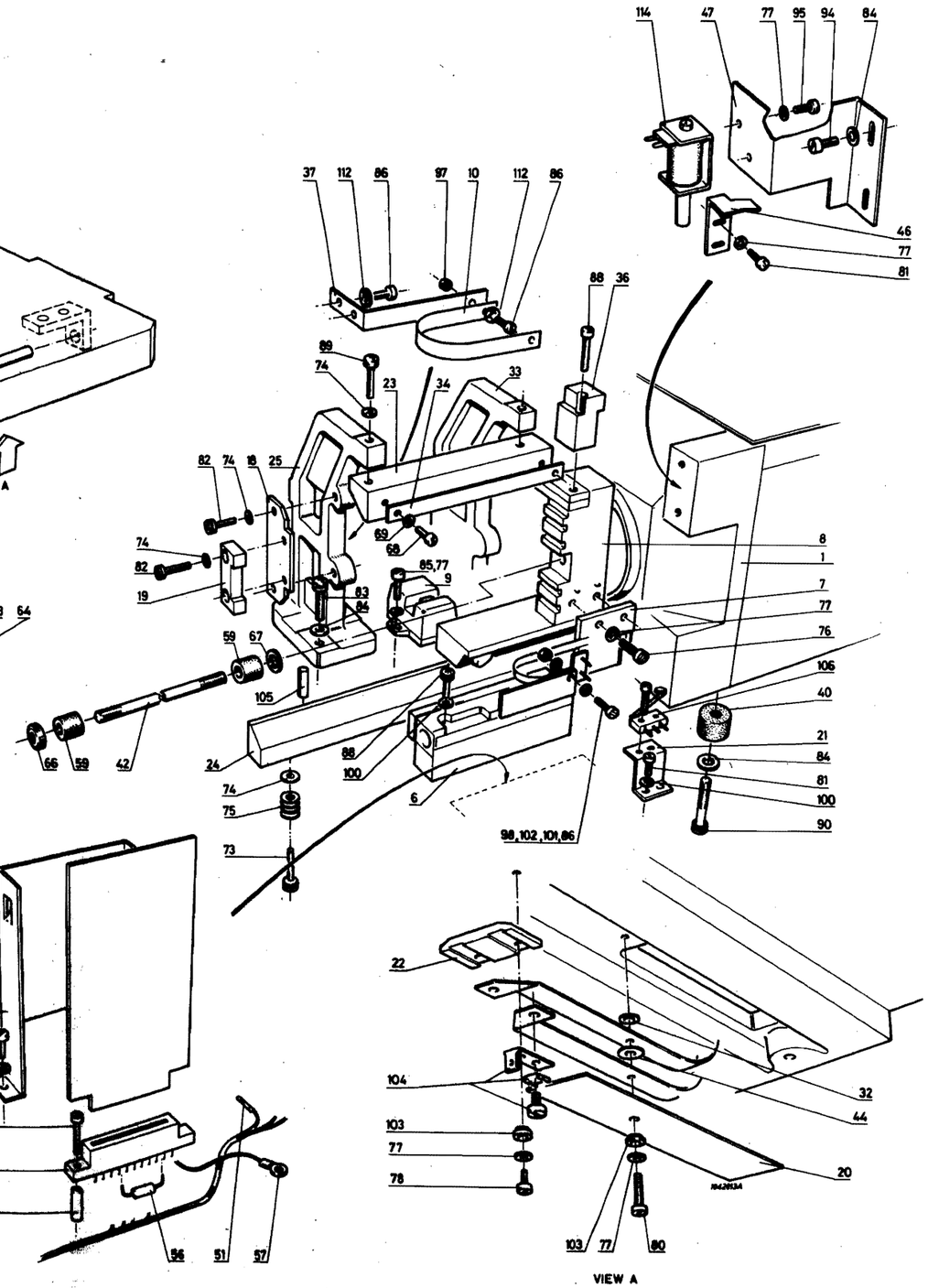

VIEW A

Item nr	Part number	Description	Qty. per ass'y
B	5122 299 08800	Main assembly	1
C	5122 299 08900	Deck assembly	1
1D	5122 289 86900	Magnet house assembly	1
2D	5122 289 86990	Coil house assembly	1
3E	5122 289 87000	Coil assembly	1
4E	5122 200 08420	Pipe	1
5D	5122 289 87050	Spindle assembly	1
6D	5122 289 87550	Secondary meander assembly	1
7D	5122 289 87790	Primary meander assembly	1
8D	5122 289 93160	Carriage assembly	1
9D	5122 289 97620	Index unit assembly	1
10D	5122 289 94120	Earth strip assembly	1
11D	5122 290 03380	Bottom assembly	1
12E	1222 100 98329	Foam rubber EKI500 5x5 long 0,15 m	1
13E	1222 100 98281	Foam rubber self adhesive 6x10 long 0,03m	1
14D	5122 200 10180	Drive motor	1
15D	5122 289 99480	Connecting house	1
16D			
17D	5122 200 08300	Magnetic core	1
18D	5122 200 09890	Plate	1
19D	5122 200 09900	Relief cam	1
20D	5122 200 09920	Strip	1
21D	5122 200 09950	Bracket	1
22D	5122 200 09980	Plate	1
23D	5122 200 10090	Guide rule upper	1
24D	5122 200 10100	Guide rule lower	1
25D	5122 200 10160	Front support	1
26D			
27D	5122 200 39270	Compensation rod	1
28D	5122 200 39260	Clamping block	1
29D	5122 200 15680	Motor fastening plate	1
30D	5122 200 15880	Ground plate	1
31D	5122 200 16800	Washer 0.1 mm	6
32D	5122 200 24630	Ring	1
33D	5122 200 26530	Rear support	1
34D	5122 200 26830	Reading rule	1
35D	5122 200 28390	Motor plate	1
36D	5122 200 33070	Block	1
37D	5122 200 33110	Bracket	1
38D	5122 200 33250	Lock nut	1
39D	5122 200 37420	Clamping piece	1
40D	5122 200 37440	Spacer	3
41D	5122 200 37450	Fastening bracket	1
42D	5122 200 37460	Rod	1
43D	5122 200 38280	Closing plate	1
44D	5122 200 38490	Ring	1
45D	5122 200 43170	Clamping bracket	4
46D	5122 200 43860	Blocking bracket	1
47D	5122 200 43870	Mounting bracket	1
48D	5122 233 11100	Spacer	6

DECK ASSEMBLY

Item nr	Part number	Description	Qty. per ass'y
49D	5122 289 96860	Cable P4	1
50E	2422 037 01012	Connector 2x10 pins	1
51E	2422 034 10274	Receptacle	5
52E	2422 034 10794	Connector 20 pins	1
53E	2422 034 10795	Connector 10 pins	1
54E	2422 034 10788	Socket connector	18
55E	2422 034 10803	Key, position	2
56E	2222 143 87108	Capacitor 1 uF 35V 10%	2
57E	2422 015 02154	Eye cable tag	1
58E	2422 034 10789	Socket connector	6
59D	5122 255 51110	Buffer	2
60D	5122 289 97540	Pick up assembly	1
61E	5122 021 20040	Pick up	1
62E	2422 034 10797	Connector, 2 pins	1
63E	2422 034 10913	Contact pin	1
64E	2422 034 10789	Contact socket	1
65D	5122 200 38500	Meander housing	1
66D	2522 411 01011	Knurled nut, M4	1
67D	2522 600 16027	Washer, 43x12	1
68D	2522 001 08097	Screw M3x6, Brass	2
69D	2522 600 10017	Washer 32x7 Brass	2
70D	2522 006 03059	Socket screw M6x40	2
71D	2522 006 03056	Socket screw M6x25	1
72D	2522 613 12014	Spring ring 6,1x11,1	3
73D	2522 006 03028	Socket screw M4x30	2
74D	2522 600 16026	Washer 4,3x4	8
75D	2622 115 10001	Cupped spring washer 8x4,2x0,3	4
76D	2522 006 03004	Socket screw M3x10	4
77D	2522 600 16017	Washer 3,2x7	22
78D	2522 004 02028	Screw M3x15	2
79D	2522 004 02025	Screw M3x8	8
80D	2522 004 02027	Screw M3x12	1
81D	2522 004 02024	Screw M3x6	15
82D	2522 006 03021	Socket screw M4x10	5
83D	2522 006 03037	Socket screw M5x20	6
84D	2522 600 16029	Washer 5,3x10	16
85D	2522 004 02026	Screw M3x10	2
86D	2522 001 08776	Screw M2,5x6, Brass	1
87D	2522 004 02033	Screw M3x30	2
88D	2522 006 03012	Socket screw M3x25	3
89D	2522 006 03025	Socket screw M4x20	2
90D	2522 006 03041	Socket screw M5x30	6
91D	2522 006 03034	Socket screw M5x10	4
92D	2522 018 01048	Counter sunk M5x8	4
93D	2522 004 02031	Screw M3x20	2
94D	2522 004 02054	Screw M5x10	2
95D	2522 004 02022	Screw M3x4	2
96D	2522 040 47045	Adjusting screw M3x6	2
97D	2522 401 60008	Nut M3	1
			1

Item nr	Part number	Description	Qty. per ass'y
98D	2522 401 05064	Nut M2,5	1
99D	2522 600 16029	Washer 5,3x10	2
100D	2522 600 16018	Washer 3,2x9	4
101D	2522 600 10137	Washer 2,7x6,5 Brass	1
102D	2522 613 01003	Spring ring 2,7x4,7	1
103D	9390 000 40112	Insulating sleeve	3
104D	2422 034 14035	Faston Tab.	2
105D	2522 670 03072	Dowel pin 5x18	2
106D	2422 120 00291	Switch Honeywell	1
107D	2413 015 00137	Cable clamp Nx1	3
108D	2522 627 01026	Distance piece 3,1x5x16	2
109D	2422 015 02208	Pin connector Red	3
110D	0822 026 98125	Ornamental profile, long 0,2 m	1
111D	2412 013 00032	Connecting block, 6 polig	1
112D	2522 608 02001	Earth ring	4
113D	2412 015 09064	Stop 15,6x20	1
114D	2412 534 00082	Elect. magnet	1
115D	2422 135 00128	Accessory	1
116D	2522 705 15109	Mounting bracket	2

CARTRIDGE HOLDER

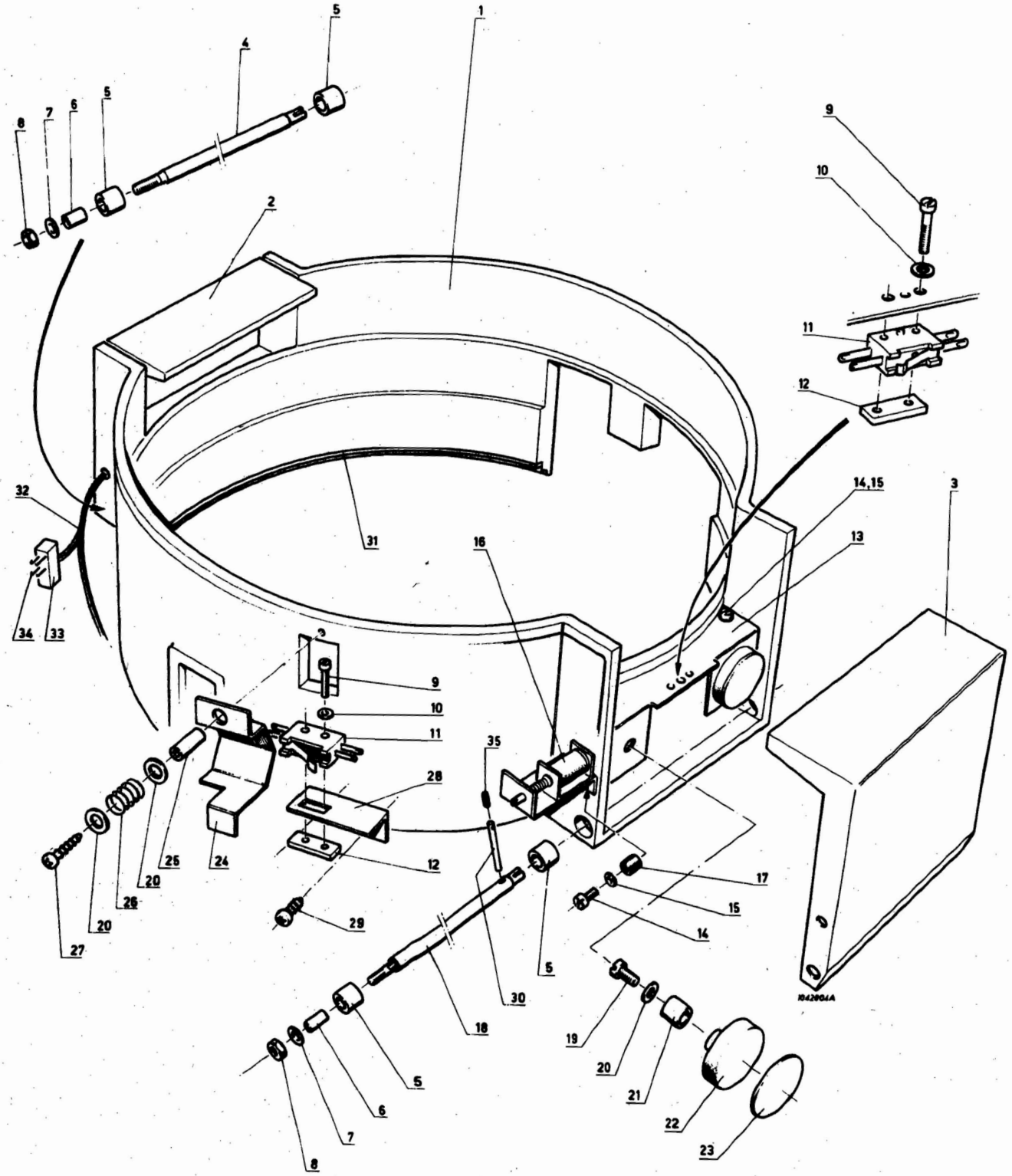

Item nr	Part number	Description	Qty. per ass'y
B	5122 299 08800	Main assembly	1
C	5122 299 09300	Cartridge holder	1
1D	5122 289 89630	Cartridge holder lacquered	1
2D	5122 289 86740	Clamp assy 2 left	1
3D	5122 289 86730	Clamp assy 2 right	2
4D	5122 200 01030	Shaft	1
5D	5122 200 01050	Bearing	4
6D	5122 200 01040	Clamping bush	2
7D	2522 600 16029	Washer 5,3 x 10 mm	2
8D	2522 401 60012	Nut M5	2
9D	2522 004 02006	Screw M2 x 12	6
10D	2522 600 16151	Washer 2,2 x 5 mm	6
11D	2411 123 02076	Microswitch	3
12D	5122 200 13030	Nut plate	3
13D	5122 200 13000	Mounting bracket	2
14D	2522 004 02039	Screw M4 x 8	6
15D	2522 613 03009	Spring washer 4,1 x 7,1 mm	6
16D	5122 289 87490	Lock magnet assy	1
17D	2522 707 01004	Tap nut M 4 x 6,5	12
18D	5122 200 29180	Shaft	1
19D	2522 004 02038	Screw M 4 x 6	4
20D	2522 600 16027	Washer 4,3 x 12 mm	5
21D	5122 200 13040	Clamping bush	4
22D	2412 534 10005	Magnet type 2420, 32 Ø	4
23D	5122 200 13020	Damping plate	4
24D	5122 200 36050	Switch bracket	1
25D	5122 200 36070	Spacer	1
26D	5122 200 36080	Compression spring	1
27D	2522 163 01027	Cross slotted tap screw 6N x 16	1
28D	5122 200 36060	Mounting bracket	1
29D	2522 163 01023	Cross slotted tap screw 6	2
30D	5122 200 18900	Pin	1
31D	1222 100 98256	Foam rubber 5 x 7 mm 0,95 m long	1
32D	5122 289 95950	Cable assy	1
33D	2422 034 10908	Connector housing 6p	4
34D	2422 034 10918	Contact pin	

SPINDLE

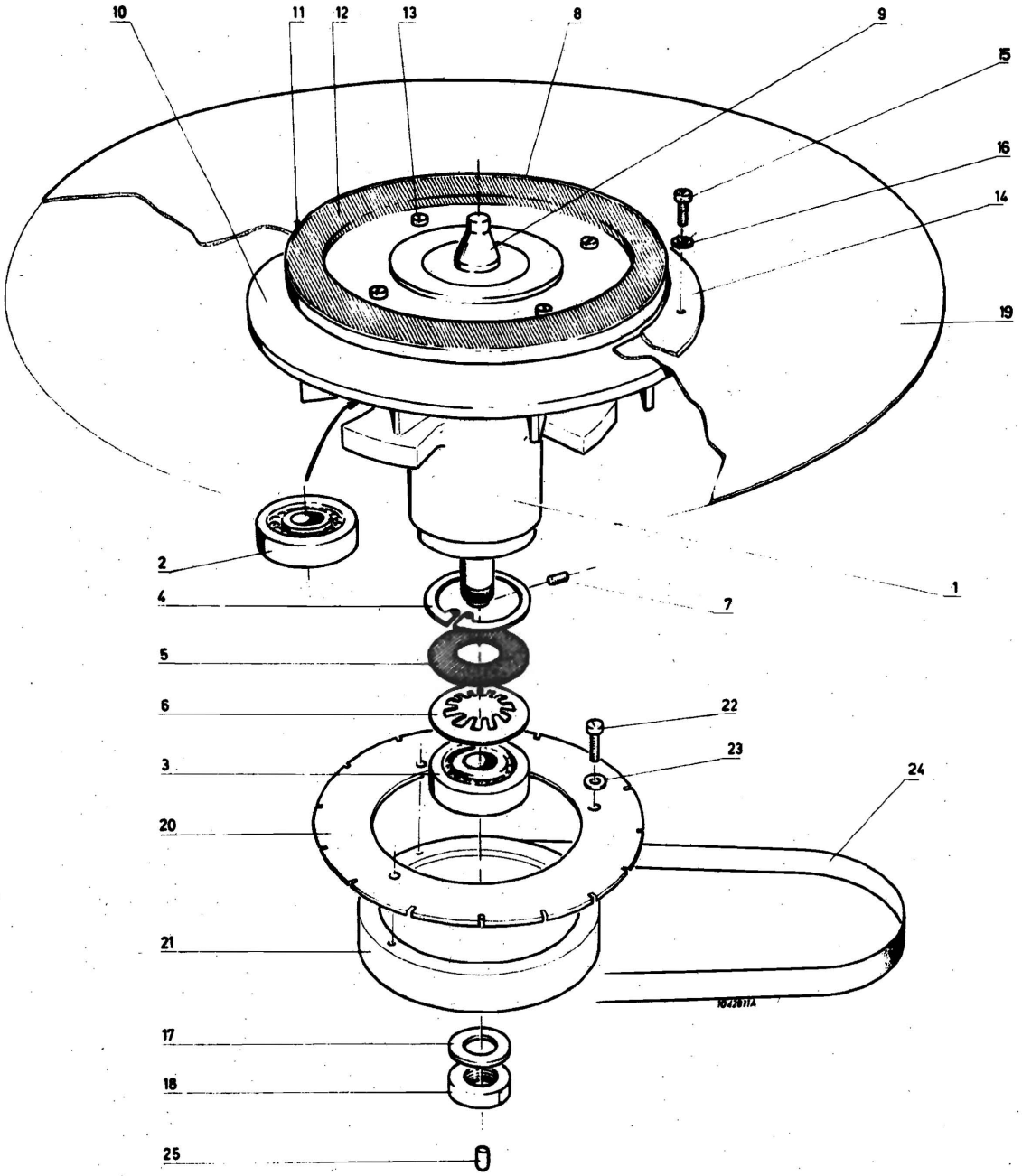

Item nr	Part number	Description	Qty. per ass'y
A	5122 299 13700	Final assembly	1
B	5122 299 08800	Main assembly	1
C	5122 299 08900	Deck assy	1
D	5122 289 87050	Spindle assy, complete	1
1E	5122 200 14840	Bearing house	1
2E	2622 001 30954	Ball bearing GMN 6005 up 2Z	1
3E	2622 001 30737	Ball bearing GMN 6203 P5 2Z	1
4E	2522 629 02027	Inner retaining ring	1
5E	5122 201 21100	Ring	1
6E	2622 115 09112	Star spring 39,7 x 23 x 0,9	1
7E	2522 043 02037	Adjusting screw M 3 x 4	1
8E	5122 289 88820	Spindle assy	1
9F	5122 200 14820	Spindle	1
10F	5122 200 14810	Carrying disk	1
11F	5122 200 14910	Magnet holder	1
12F	5122 200 14920	Magnet ring	1
13F	2522 001 17169	Screw M 4 x 8	4
14C	5122 200 14850	Clamping disk	1
15C	2522 001 17169	Screw M 4 x 8	6
16C	5122 200 24630	Ring	6
17C	2522 716 10031	Ring	1
18C	2622 890 02003	Spindle nut SKF KM/2 M15 x 1	1
19B	5122 021 02010	Memory disk	1
20B	5122 200 26070	Index ring 16 slots	1
21B	5122 200 23640	Puley	1
22B	2522 004 02039	Screw M 4 x 8	3
23B	2522 600 16026	Lock ring 4,3 x 9	3
24B	5122 020 41740	Belt 50 CS/S	1
25B	5122 200 43140	Contact pin	1

CARRIAGE

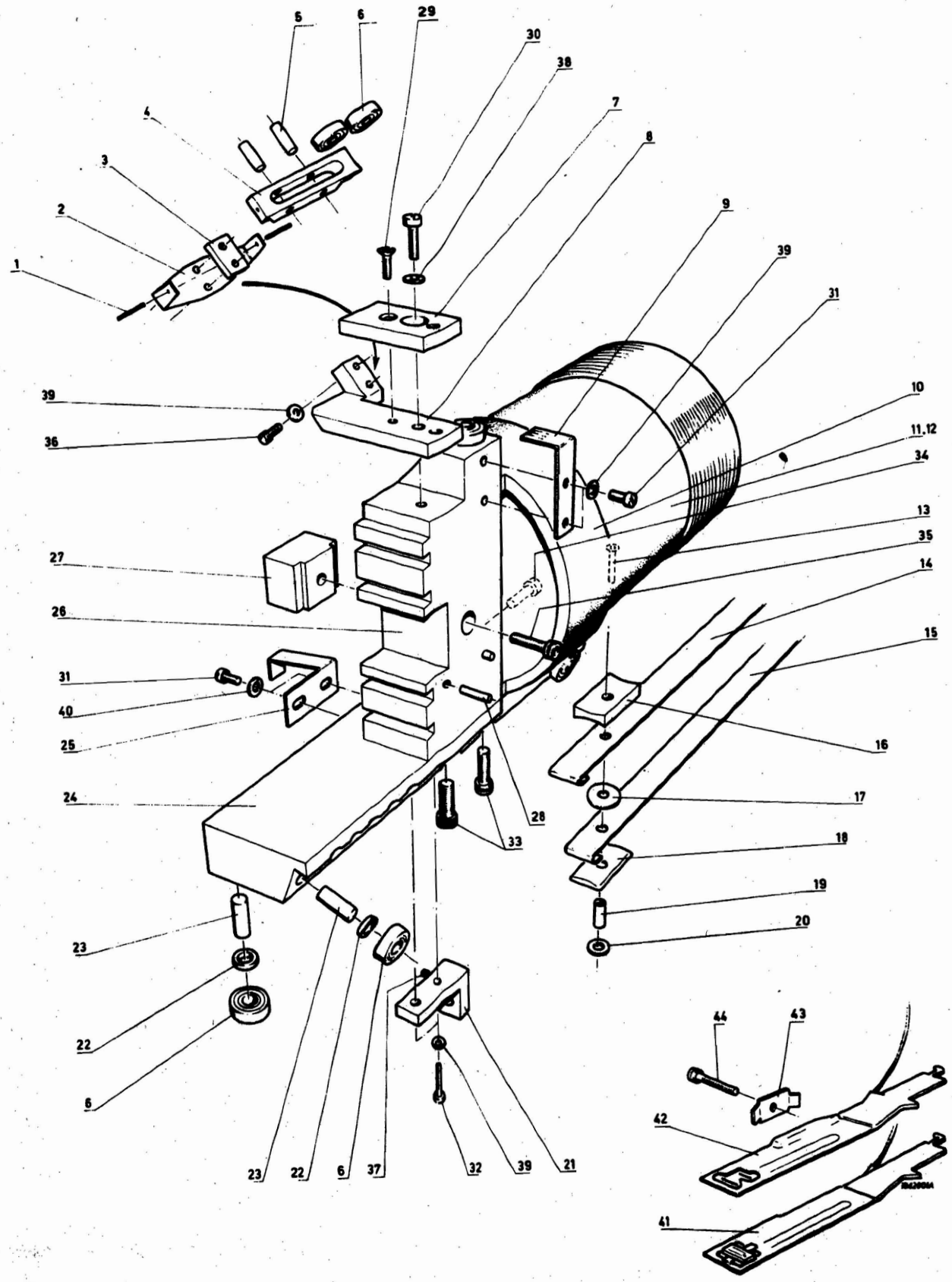
5
6
29
30
38
7
8
4
3
2
1
9
39
31
39
36
10
11.12
34
13
35
14
27
26
15
31
40
25
16
24
17
28
33
18
19
20
23
22
6
44
43
42
41
23
22
6
37
32
39
21

Item nr	Part number	Description	Qty. per ass'y
C	5122 299 08900	Deck assy	1
D	5122 289 93160	Carriage assy	1
1E	2522 670 01019	Pin 1,5 x 8	2
2E	5122 200 10080	Flat spring	1
3E	5122 200 09870	Plate	1
4E	5122 200 09840	Bearing holder	1
5E	5122 259 01110	Bearing pin 12 mm	2
6E	5122 020 40701	Bearing D 893-713-LG20	7
7E	5122 200 33060	Plate	1
8E	5122 200 09860	Bracket	1
9E	5122 200 26810	Vernier	1
10E	5122 200 26450	Voice coil holder	1
11E	5122 289 86260	Voice coil assy	1
12E	5122 289 86250	Voice coil	1
13E	2522 642 04046	Cyclet 2 x 0,3 x 8	1
14E	5122 289 86280	Strip guide	1
15E	5122 289 86290	Strip guide	1
16E	5122 200 08250	Spacer	1
17E	5122 200 37310	Ring	1
18E	5122 200 08240	Washer plate	1
19E	5122 200 08260	Insulating can	1
20E	5122 600 16151	Washer 2,2 x 5	1
21E	5122 200 09940	Lower plate	1
22E	5122 200 08310	Ring	5
23E	5122 259 11110	Bearing pin 16 mm	5
24E	5122 200 10070	Lower plate	1
25E	5122 200 09910	Vane	1
26E	5122 200 10130	Mounting block heads	1
27E	5122 200 26020	Block	1
28E	2522 670 01045	Pin 3 x 8	2
29E	2522 018 01026	Screw, countersunk M 3 x 10	1
30E	2522 006 03022	Screw M 4 x 12	1
31E	2522 004 02024	Screw M 3 x 6	4
32E	2522 004 02027	Screw M 3 x 12	2
33E	2522 006 03025	Allen screw M 4 x 20	2
34E	2522 006 03021	Allen screw M 4 x 10	2
35E	2522 006 03006	Allen screw M 3 x 12	1
36E	2522 004 02025	Screw M 3 x 8	2
37E	2522 040 31235	Adjusting screw M 2,5 x 9	1
38E	2522 600 16026	Washer 4,3 x 9	1
39E	2522 600 16017	Washer 3,2 x 7	4
40E	2522 609 02003	Lock washer	2
41	5122 289 87380	Head assy, U-100-1	2
42	5122 289 87370	Head assy, D-100-1	2
43	5122 261 11110	Mounting plate	6
44	2522 006 03012	Allen screw M 3 x 25	6

SWITCHING UNIT

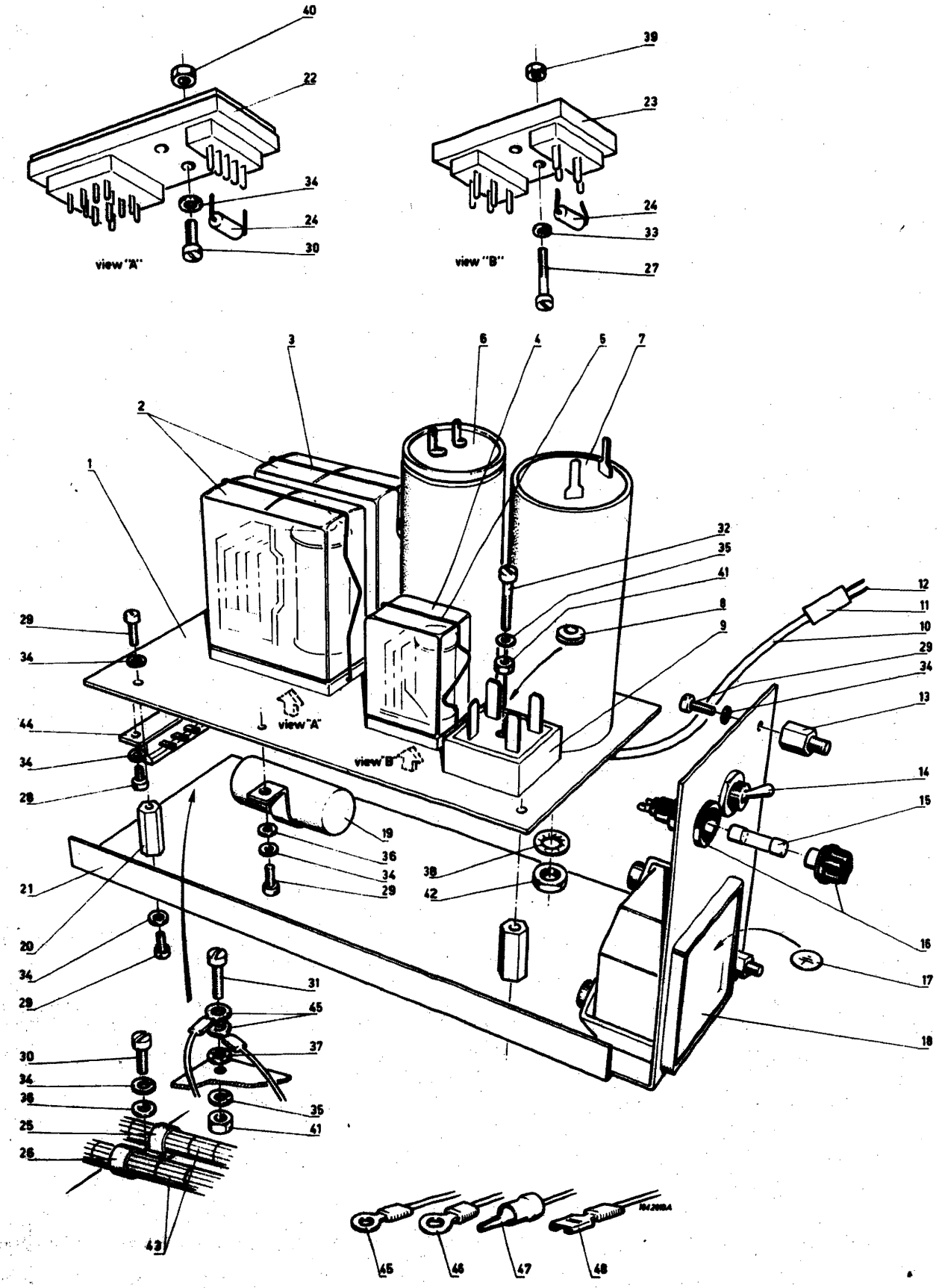

Item nr	Part number	Description	Qty. per ass'y
C	5122 289 97520	Frame assy	1
D	5122 289 96910	Switching unit	1
1E	5122 200 36520	Relay plate	1
2E	2422 132 01835	Relay V 23006 G 1012-A 034	2
3E	2422 135 03284	Clamping spring V 23006 - Z 1003	2
4E	2422 132 01834	Relay V 23154 - C 0721 F 105	1
5E	2422 135 03217	Clamping spring V 23154 - Z 1021	1
6E	2012 206 09009	Capacitor, MP 33/10/240A	1
7E	2012 300 20005	Interference filter	1
8E	2422 015 09035	Grommet 4,5 x 1	1
9E	9332 351 50682	Bridge rectifier G 775-2	1
10E	5122 289 96670	Cable CPS	1
11E	2422 034 10908	Connector 6p	1
12E	2422 034 10913	Contact pin	6
13E	5122 200 36500	Spacer	2
14E	2422 125 01137	Tumbler switch	1
15E	2422 086 00046	Fuse 3,15A	1
16E	2422 092 00001	Fuse holder	1
17E	2812 100 23001	Ground symbol 3S 10rd	1
18E	2622 799 05038	Logtimer	1
19E	2012 500 10002	Interference capacitor AZ 405	1
20E	5122 200 36510	Spacer	4
21E	5122 200 36530	Mounting plate	1
22E	2422 135 03283	Relay socket V 23006-Z 1001	2
23E	2422 135 03232	Relay socket V 23154-Z 1005	1
24E	9330 458 51112	Diode BYX 36/600	3
25E	2413 015 00139	Cable clamp 6	1
26E	2413 015 00137	Cable clamp	1
27E	2522 004 02137	Screw M 2,5 x 10	1
28E	2522 004 02022	Screw M 3 x 4	2
29E	2522 004 02024	Screw M 3 x 6	11
30E	2522 004 02025	Screw M 3 x 8	3
32E	2522 004 02045	Screw M 4 x 20	1
33E	2522 613 01003	Spring washer 2,7 x 4,7	1
34E	2522 613 03005	Spring washer 3,1 x 5,7	16
35E	2522 613 03009	Spring washer 4,1 x 7,1	3
36E	2522 600 16017	Lock ring	2
37E	2522 608 02002	Ground ring	2
38E	2522 615 04043	Spring washer 8,2	1
39E	2522 401 60064	Nut M 2,5	1
40E	2522 401 60008	Nut M3	2
41E	2522 401 60011	Nut M4	3
42E	2522 400 02011	Nut M8	1
43E	5122 289 96520	Cable S.U.	1
44E	2422 010 10802	Mounting support	1
45E	2422 015 02156	Cable tag M4 x 1,5	4
46E	2422 015 02157	Cable tag M5 x 1,6	1
47E	2422 015 02208	Cable tag 1,5	7
48E	2422 015 02862	Cable tag red	4

MAGNET HOUSE

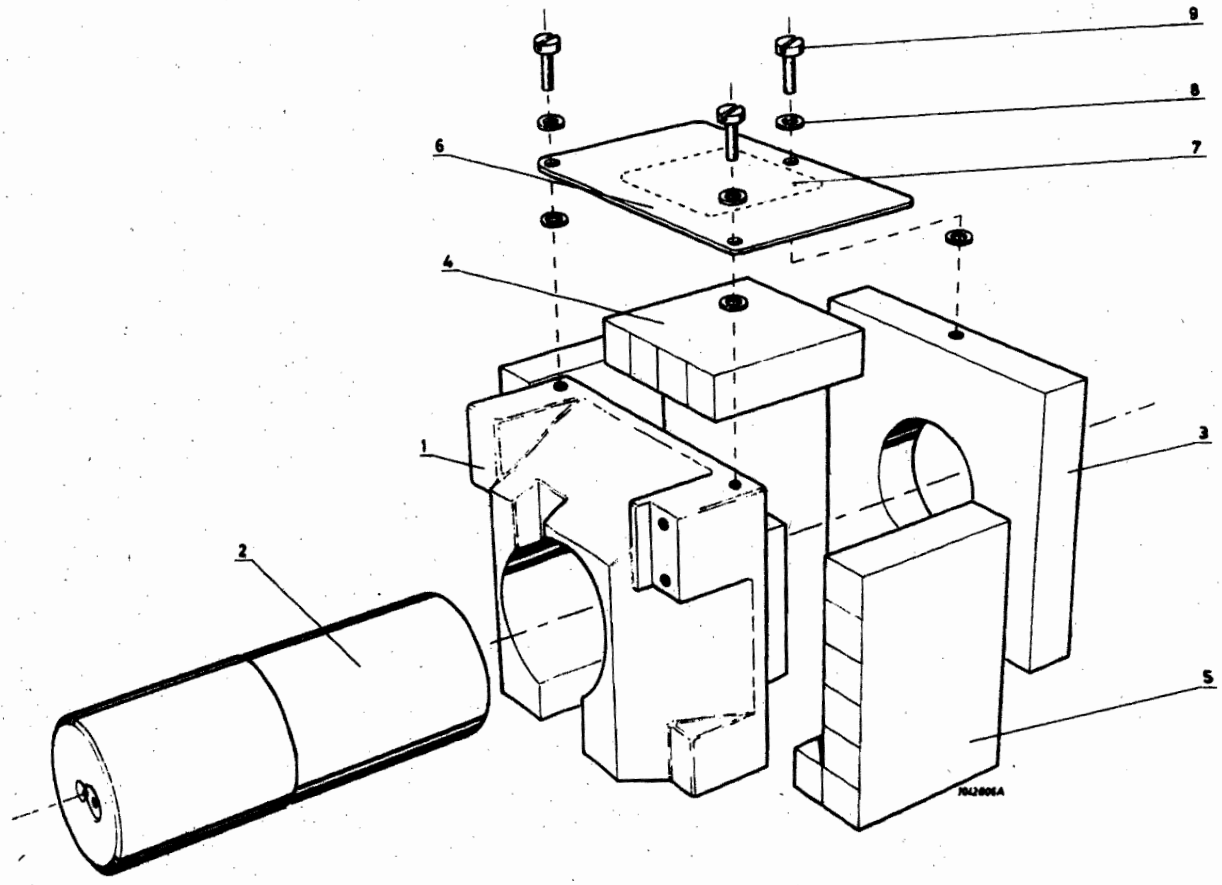

Item nr	Part number	Description	Qty. per ass'y
C	5122 299 08900	Deck assembly	1
D	5122 289 86900	Magnet house assy	1
1E	5122 200 24220	Frontplate	1
2E	5122 200 10110	Core	1
3E	5122 200 10150	Rear plate	1
4E	5122 200 14270	Magnet	1
5E	5122 200 14280	Magnet	2
6E	5122 200 14290	Protection plate	1
b7E	5122 200 04350	Sticker	1
8E	2522 600 16029	Washer 5,3 x 10	6
9E	2522 004 02054	Cyl. screw M 5 x 10	3

LOCK MAGNET

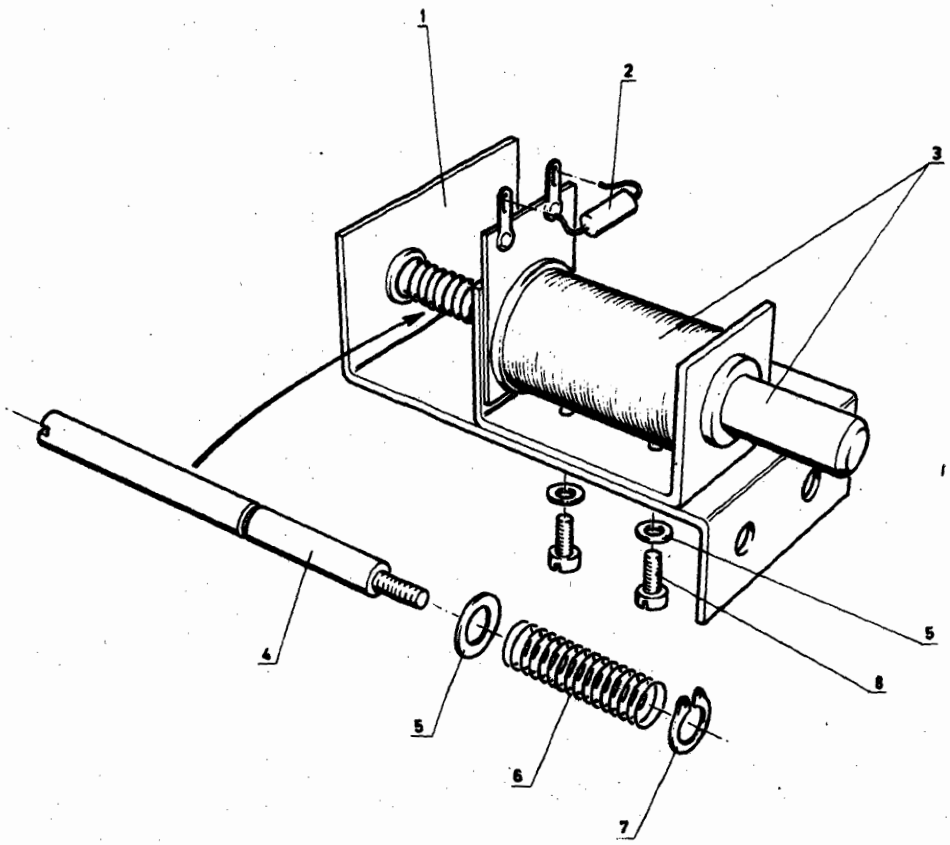

Item nr	Part number	Description	Qty. per ass'y
C	5122 299 09300	Cartridge holder assy	1
D	5122 289 87490	Lock magnet assy	1
1E	5122 200 13640	Mounting bracket	1
2E	9330 458 51112	Diode BYX 36/600	1
3E	2412 534 00058	Magnet	1
4E	5122 200 25900	Pin	1
5E	2522 600 16017	Washer 3,2 x 7 mm	3
6E	5122 200 25910	Compression spring	1
7E	2522 634 04005	Retaining ring 2,3 mm	1
8E	2522 004 02024	Screw M3 x 6	2

CLAMP LEFT/CLAMP RIGHT

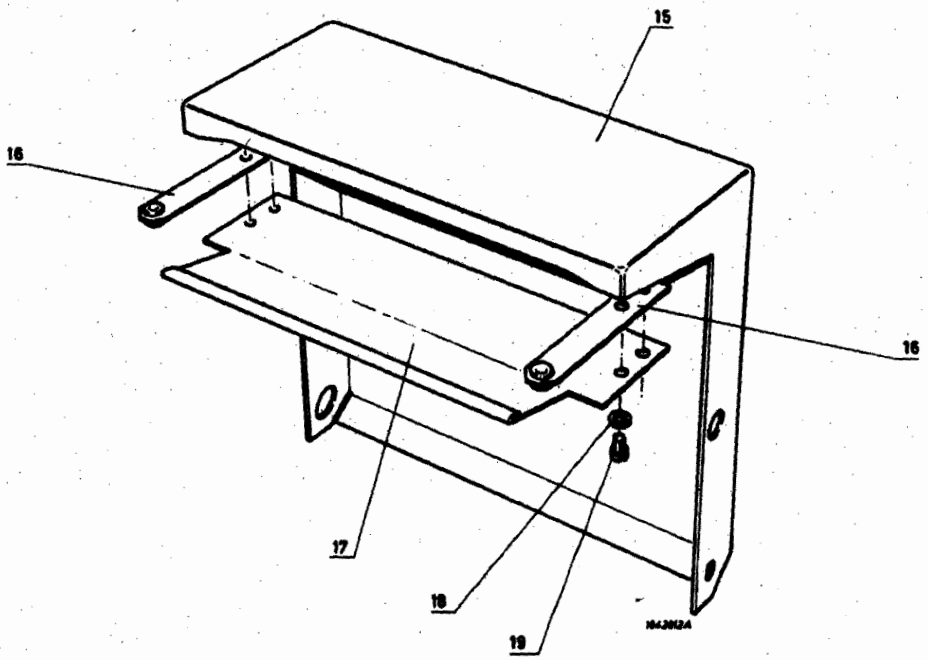

Item nr	Part number	Description	Qty. per ass'y
D	5122 289 86730	Clamp-right	1
D	5122 289 86740	Clamp-left	1
17E	5122 200 01010	Protection plate	2
15E	5122 289 86710	Clamp (right)	1
15E	5122 289 86720	Clamp (left)	1
16E	5122 289 88760	Pression spring	4
18E	2522 600 16017	Washer 3,2 x 7 mm	8
19E	2522 004 02022	Screw M 3 x 4	8

PRIME AND SEC MEANDER

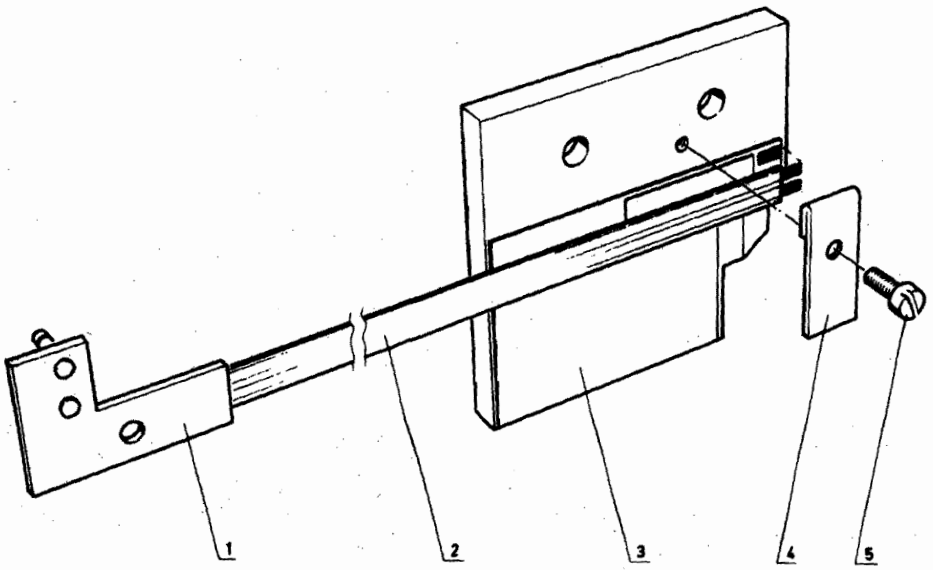

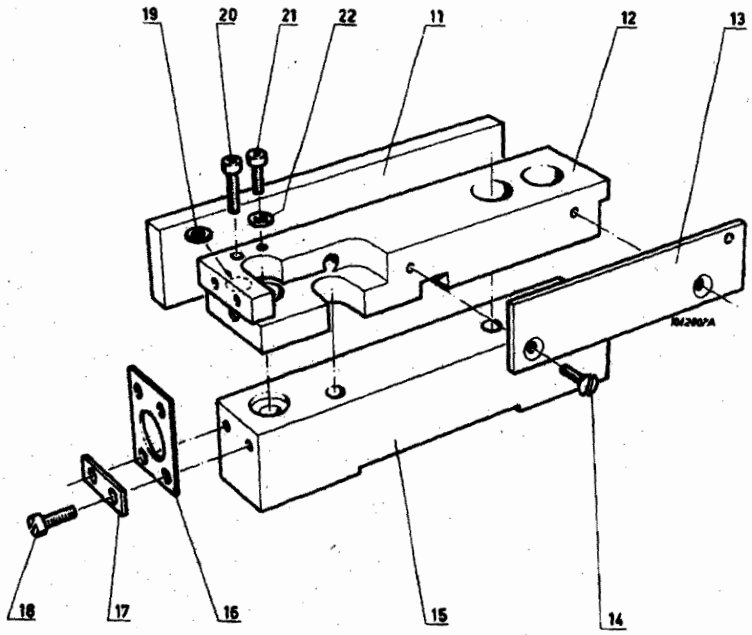

Item nr	Part number	Description	Qty. per ass'y
C	5122 299 08900	Deck assembly	1
D	5122 289 87790	Primary meander assembly	1
1E	5122 289 89470	Connecting cable assembly	1
2E	5122 289 83800	Flat cable	1
3E	5122 289 88990	Primary meander plate	1
4E	5122 200 14560	Clamps	1
5E	2522 004 02135	Screw M 2.5 x 4	1
D	5122 289 87550	Secondary meander assembly	1
11E	5122 200 24820	Secondary meander plate	1
12E	5122 200 39010	Meander block	1
13E	5122 200 26430	Plate	1
14E	2522 017 04381	Screw countersunk M 2.5 x 6	2
15E	5122 200 16810	Plate	1
16E	5122 200 07450	Spring	2
17E	5122 200 07590	Clamping plate	4
18E	2522 004 02137	Screw M 2.5 x 6	8
19E	2522 600 16017	Washer 3.2 x 7	1
20E	2522 006 03004	Allen screw M 3 x 10	1
21E	5122 200 07480	Adjusting screw	1
22E	5122 200 07580	Spacer ring	

INDEX UNIT

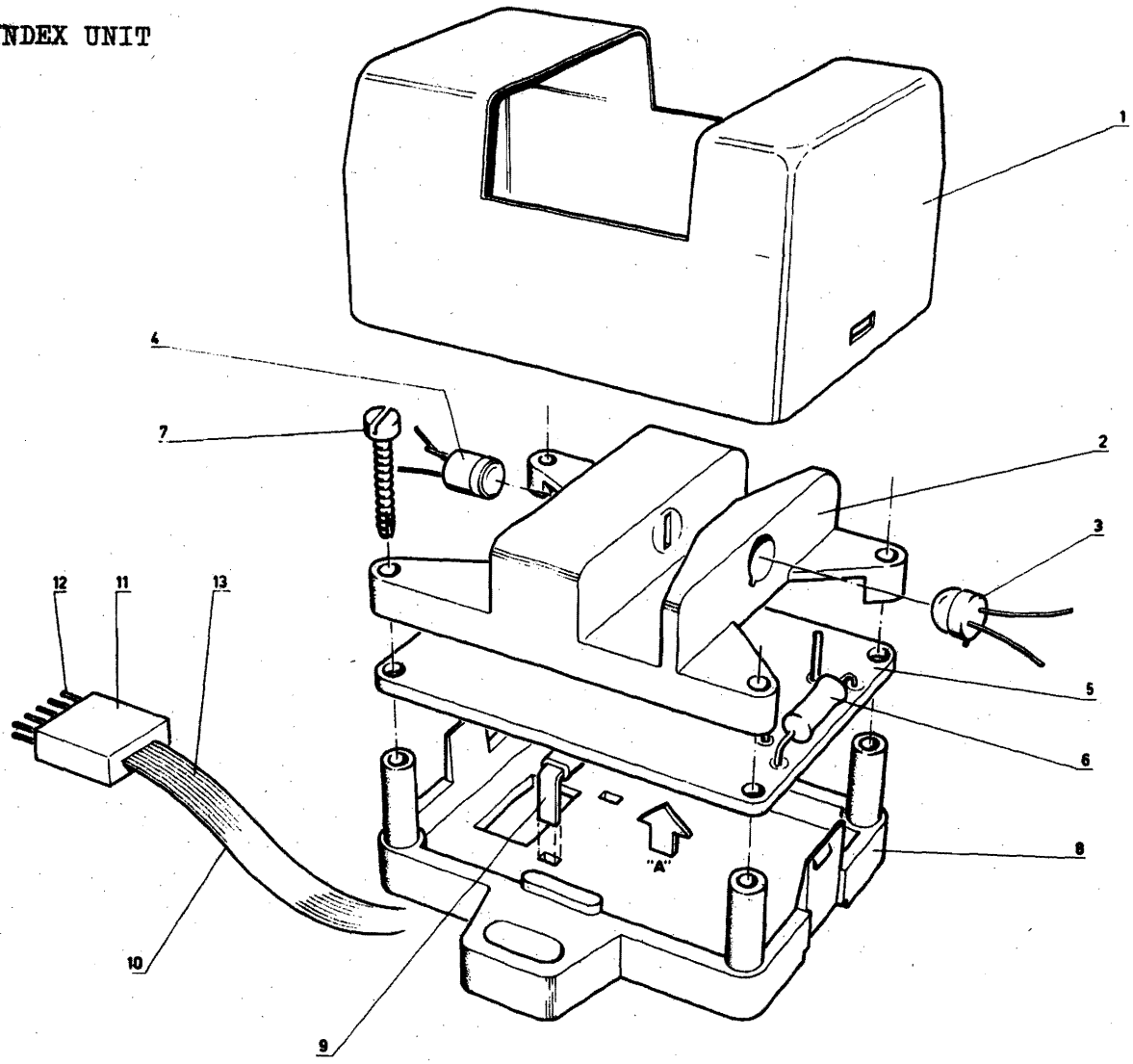

PCBA U1 INDEX UNIT

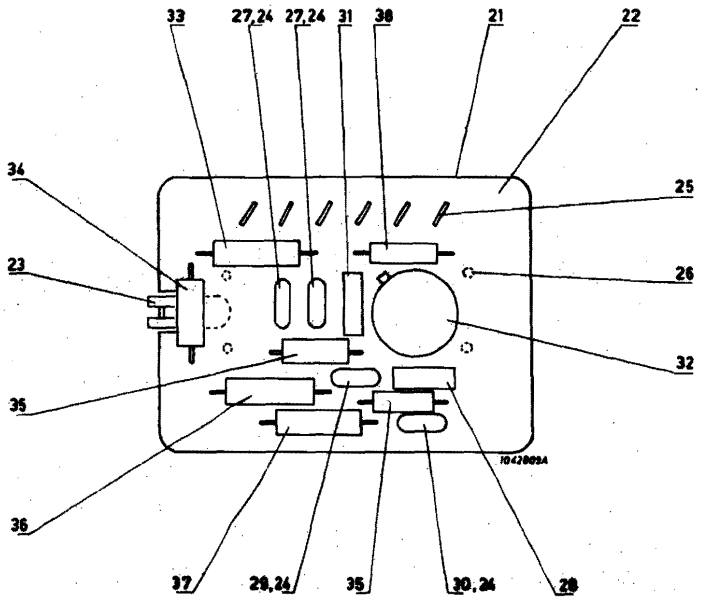

view "A"

INDEX UNIT

Item nr	Part number	Description	Qty. per ass'y
C	5122 299 08900	Deck assy	1
D	5122 289 97620	Index Unit	1
1E	5132 101 31100	Cover	1
2E	5132 101 11100	Holder	1
3E	9331 621 10112	L.E.D. ME4	1
4E	9330 619 20112	Photo-transistor BPX 25	1
5E	5132 198 11100	P.C.B.A. U1	1
6E	2322 152 57509	Resistor 75 E $\frac{1}{4}$W 1% or	1
7E	2512 200 17029	Screw type 1 - 2 x $\frac{1}{2}$"	4
8E	5132 101 01100	Bottom injection moulding	1
9E	5132 197 51100	Bracket	1
10E	5122 289 97660	Cable assy	1
11E	2422 034 10795	Connector housing 10 pins	1
12E	2422 034 10913	Contact pin	8
13E	5122 021 70021	Cable 48 cores, length: 150 mm	1

PCPA U1 INDEX UNIT

Item nr	Part number	Description	Qty. per ass'y
D	5122 289 97620	Index Unit	1
21E	5132 198 11100	PCBA U1	1
22F	5132 101 61100	Board	1
23F	5132 101 21100	Contact spring	1
24F	3522 103 77401	Washer	4
25F	4032 814 17780	Solder eyelet	6
26F	4322 027 65941	Solder eyelet long	6
27F	2222 630 01392	Capacitor 3900 pF, 100V, $\pm$ 10%	2
28F	2022 552 00037	Capacitor 0,1 μF, 25V	2
29F	2222 631 09688	Capacitor 6,8 pF, 63V	1
30F	2222 630 01102	Capacitor 1000 pF, 100V, $\pm$ 10%	1
31F	2022 552 00037	Capacitor 0,1 μF, 25V	1
32F	9331 661 40112	I.C. MC 1710 CG	1
33F	2322 152 51214	Resistor 121 K ohm	1
34F	2322 151 52613	Resistor 26,1 K ohm 1/8W $\pm$ 1%	1
35F	2322 151 51002	Resistor 1 K ohm 1/8W $\pm$ 1%	2
36F	2322 152 51964	Resistor 196 K ohm $\frac{1}{4}$W $\pm$ 1%	1
37F	2322 152 53014	Resistor 301 K ohm $\frac{1}{4}$W $\pm$ 1%	1
38F	2322 151 53161	Resistor 316 ohm 1/8W $\pm$ 1%	1

PCBA, READ PREAMPLIFIER

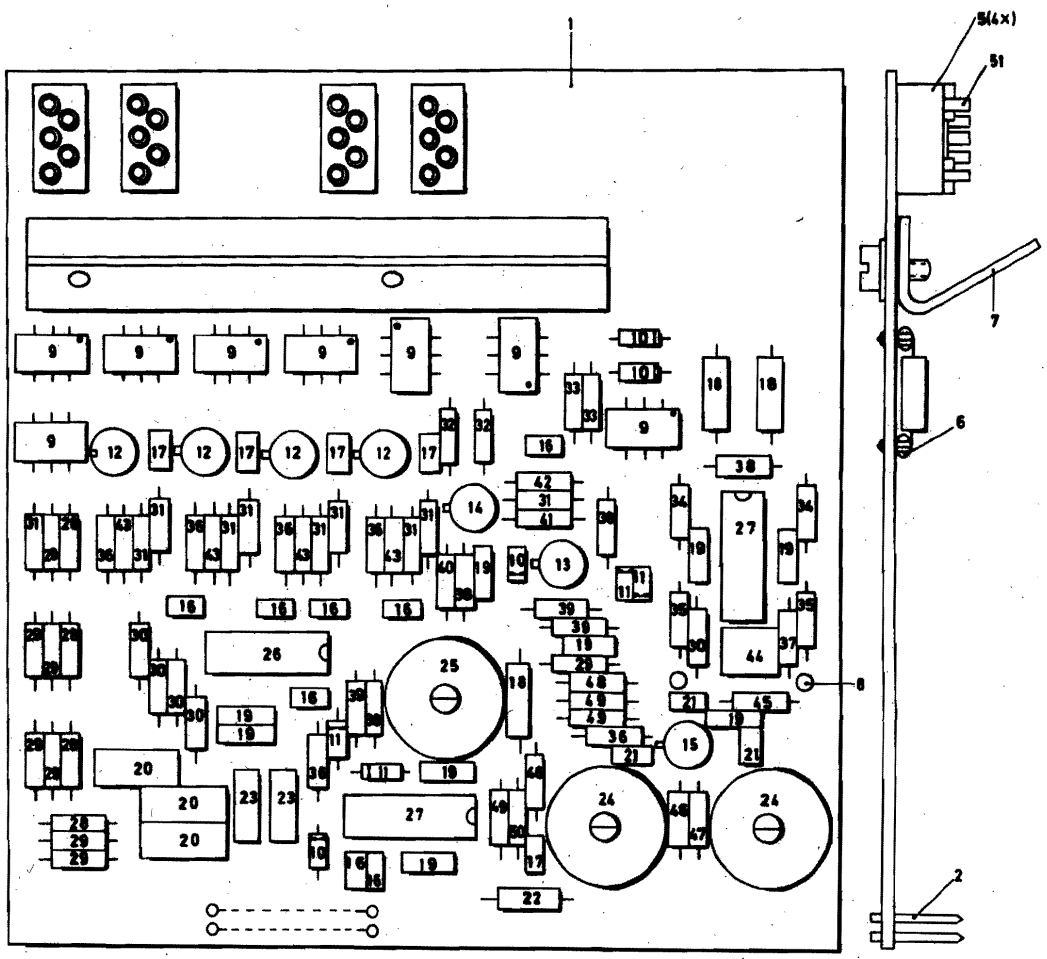





Item nr	Part number	Description	Qty. per ass'y
A	5122 099 13700	Final assembly	1
B	5122 289 96440	PCBA, Read Preamplifier	1
1C	5122 200 36370	Board, 6014	1
2C	2422 034 10892	WRAP-pin	18
3C	3522 103 77401	Base, capacitor	13
4C	9390 155 30112	Foot, transistor, TO-18	7
5C	5122 289 89780	Plug housing, assy	4
6C	3522 020 15360	Glass bead	
7C	5122 200 18560	Bracket, print	1
8C	2422 034 10892	Pin	2
9C	9331 041 10112	Diode, BAY512	8
10C	9331 012 20112	Diode, BAW62	4
11C	9331 177 40112	Diode, BZX79 C6V2	4
12C	9330 894 90112	Transistor, 2N2222A	4
13C	9330 219 20112	Transistor, BSX20	1
14C	9330 441 00112	Transistor, BCY70	1
15C	9330 116 40112	Transistor, BCY90	1
16C	2222 629 02103	Capacitor, CER, 10nF -20/+100% 40V	7
17C	2222 631 58479	Capacitor, CER, 47pF ±2% 100V	5
18C	2222 426 45101	Capacitor, Micropoco, 510pF ±1% 250V	2
18C-A	2222 425 45101	Capacitor, Micropoco, 510pF ±1% 125V	1
19C	2222 629 03223	Capacitor, CER, 22nF -20/+100% 40V	10
20C	2222 344 90101	Capacitor, MPR, 0,1 µF 10% 100V	3
21C	2222 631 10829	Capacitor, CER, 82pF 2% 100V	1
21C-A	2222 631 10189	Capacitor, CER, 18pF 2% 100V	2
22C	2222 143 87337	Capacitor, Electrolyte, 0,33 µF, 10% 35V	1
23C	2422 535 00221	Coil, microchoke, 220 µH	2
24C	5122 283 31110	Coil, assy, 40 µH	2
25C	5122 283 41110	Coil, assy, 2 µH	1
26C	9380 000 60000	Integrated circuit, SN7404N	1
27C	9332 085 80682	Integrated circuit, UGA 7733.393	2
28C	2322 151 55119	Resistor, 51,1 ohm, 1% 125mW	4
29C	2322 151 56819	Resistor, 68,1 ohm, 1% 125mW	9
30C	2322 151 54649	Resistor, 46,4 ohm, 1% 125mW	4
31C	2322 151 51003	Resistor, 10K, 1% 125mW	9
32C	2322 151 51782	Resistor, 1K78, 1% 125mW	2
33C	2322 151 52612	Resistor, 2K61, 1% 125mW	2
34C	2322 151 54642	Resistor, 4K64, 1% 125mW	2
35C	2322 151 51213	Resistor, 12K1, 1% 125mW	2
36C	2322 151 53162	Resistor, 3K16, 1% 125mW	5
37C	2322 151 54649	Resistor, 46,4 ohm, 1% 125mW	1
38C	2322 151 55629	Resistor, 56,2 ohm, 1% 125mW	3
39C	2322 151 51781	Resistor, 178 ohm, 1% 125mW	4
40C	2322 151 51473	Resistor, 14K7, 1% 125mW	1
41C	2322 151 52152	Resistor, 2K15, 1% 125mW	1
42C	2322 151 51002	Resistor, 1K, 1% 125mW	1
43C	2322 151 51471	Resistor, 147 ohm, 1% 125mW	4
44C	2113 375 00022	Potentiometer, Morganite, 100 ohm	1
45C	2322 151 53832	Resistor, 3K83, 1% 125mW	1
46C	2322 151 51001	Resistor, 100 ohm, 1% 125mW	2

PCBA, READ PREAMPLIFIER

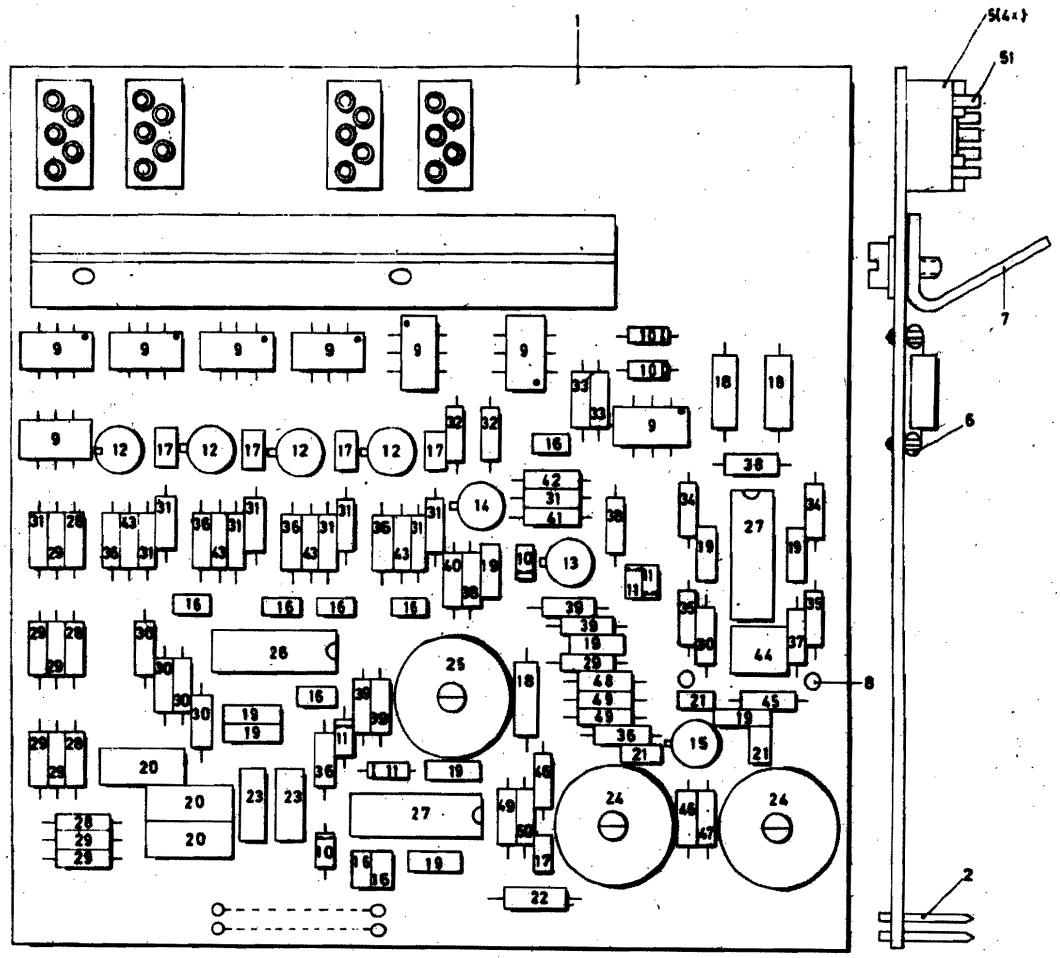

Item nr	Part number	Description	Qty. per ass'y
47C	2322 151 52133	Resistor, 21K5, 1% 125mW	1
48C	2322 151 52151	Resistor, 215 ohm, 1% 125mW	1
49C	2322 151 53161	Resistor, 316 ohm, 1% 125mW	3
50C	2322 151 55621	Resistor, 562 ohm, 1% 125mW	1
51C	2411 021 01213	Contact socket, 39535	5

PCBA, START-STOP: 1L98

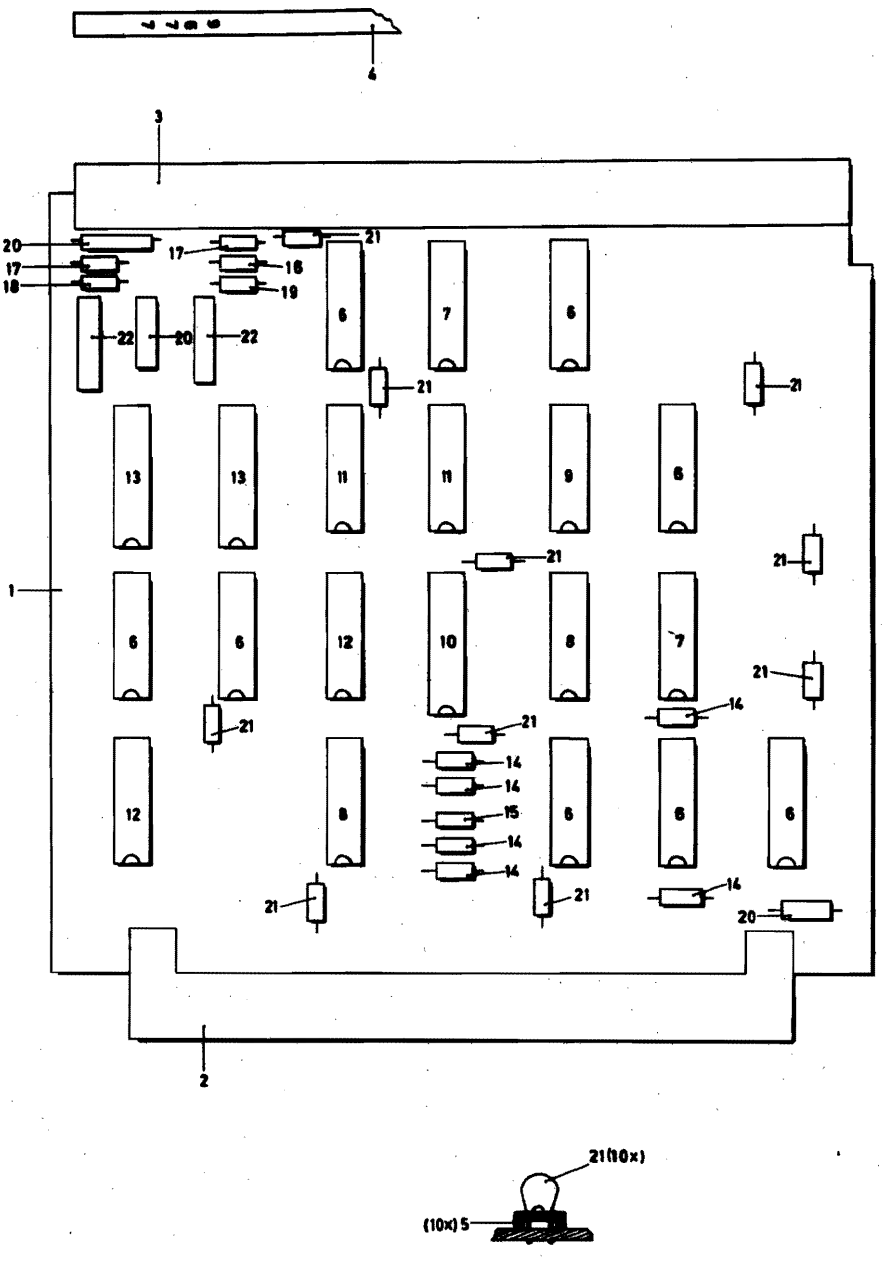

Item nr	Part number	Description	Qty. per ass'y
A	5122 299 13700	Final assembly	1
B	5122 289 96770	PCBA, start-stop 1L98	1
1C	5122 200 36850	Board, 4244	1
2C	2422 025 89116	Connector, 64-pole	1
3C	4022 191 06080	Front-strip	1
4C	5122 200 44480	Text-strip	1
5C	3522 103 77401	Base, capacitor	10
6C	9380 000 00000	Integrated circuit, SN74 00N	8
7C	9380 001 00000	Integrated circuit, SN74 10N	2
8C	9380 000 60000	Integrated circuit, SN74 04N	2
9C	9380 002 70000	Integrated circuit, SN74 54N	1
10C	9380 018 10000	Integrated circuit, SN74 H106N	1
11C	9380 003 20000	Integrated circuit, SN74 74N	2
12C	9380 000 20000	Integrated circuit, SN74 02N	2
13C	9380 005 50000	Integrated circuit, SN74 123N	2
14C	2322 151 58251	Resistor, 825 ohm, 1% 125mW	6
15C	2322 151 51003	Resistor, 10K 1% 125mW	1
16C	2322 151 51211	Resistor, 121 ohm 1% 125mW	1
17C	2322 151 51783	Resistor, 17K8 1% 125mW	2
18C	2322 151 52873	Resistor, 28K7, 1% 125mW	1
19C	9330 228 60112	Diode, BAX13	1
20C	2222 143 14478	Capacitor, Tantalum, 4,7/uF 20% 10V	3
21C	2222 629 02103	Capacitor, CER, 10.000pF -20/+100% 40V	10
22C	2222 344 90101	Capacitor, MPR, 0,1/uF 10% 100V	2

PCBA, HUP 1L97

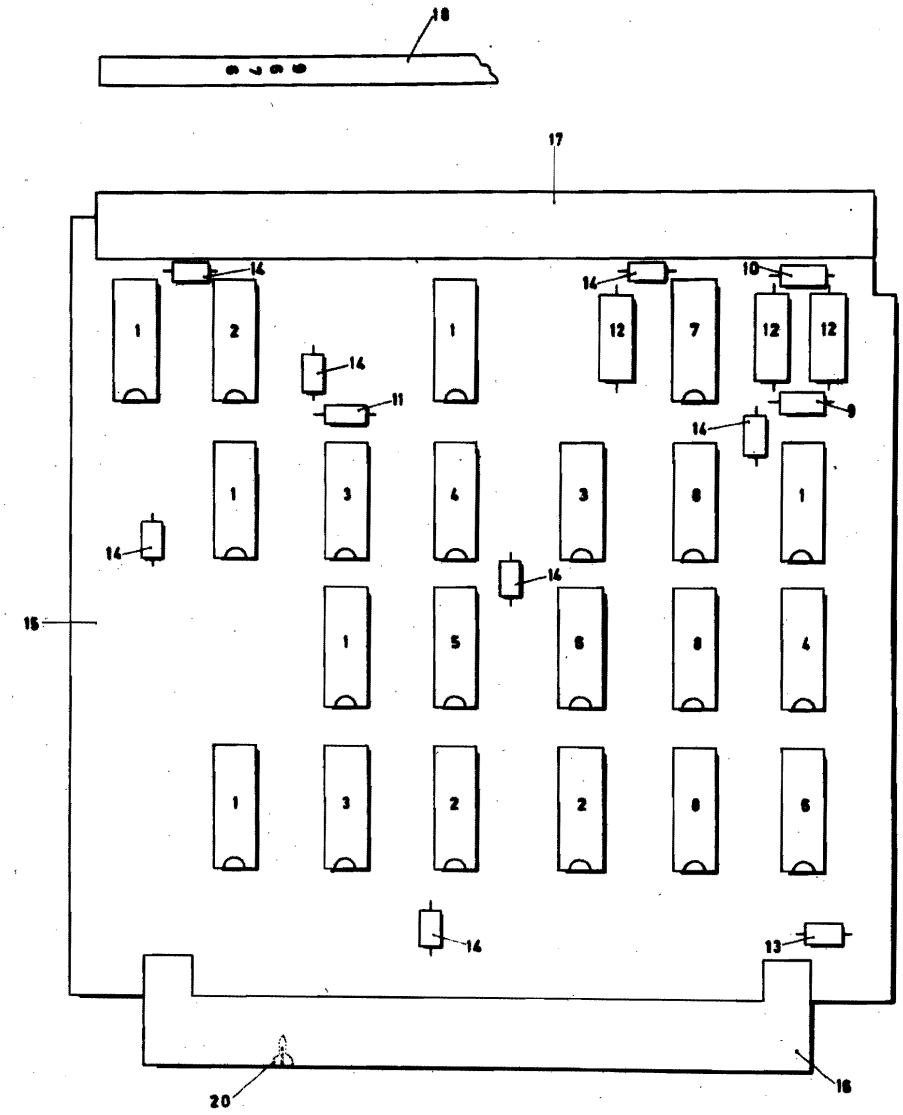



Item nr	Part number	Description	Qty. per ass'y
A	5122 299 13700	Final assembly	1
B	5122 289 96760	PCBA 1L97	1
1C	9380 000 00000	Integrated circuit, SN7400N	6
2C	9380 000 60000	Integrated circuit, SN7404N	3
3C	9380 001 00000	Integrated circuit, SN7410N	3
4C	9380 000 20000	Integrated circuit, SN7402N	2
5C	9380 001 40000	Integrated circuit, SN7420N	1
6C	9380 003 20000	Integrated circuit, SN7474N	2
7C	9380 005 50000	Integrated circuit, SN74123N	1
8C	9380 014 50000	Integrated circuit, SN74197N	3
9C	2322 151 53163	Resistor, 31K6, ±1% 125mW	1
10C	2322 151 53833	Resistor, 38K3, ±1% 125mW	1
11C	2322 151 58251	Resistor, 825 ohm ±1% 125mW	1
12C	2222 344 90101	Capacitor, MPR, 0.1 uF, ±1% 100V	3
13C	2222 143 15338	Capacitor, Tantalum, 3.3 uF ±20% 15V	13
14C	2222 629 02103	Capacitor, CER, 10.000pF, -20/+100% 40V	7
15C	5122 200 36840	Board, 4243	1
16C	2422 025 89116	Connector, 64-pole	1
17C	4022 191 06080	Front-strip	1
18C	5122 200 44460	Text-strip	1
19C	3522 103 77401	Base, capacitor	7
20C	4332 026 10840	Key, pin	1

PCBA, WINDOW 1M67

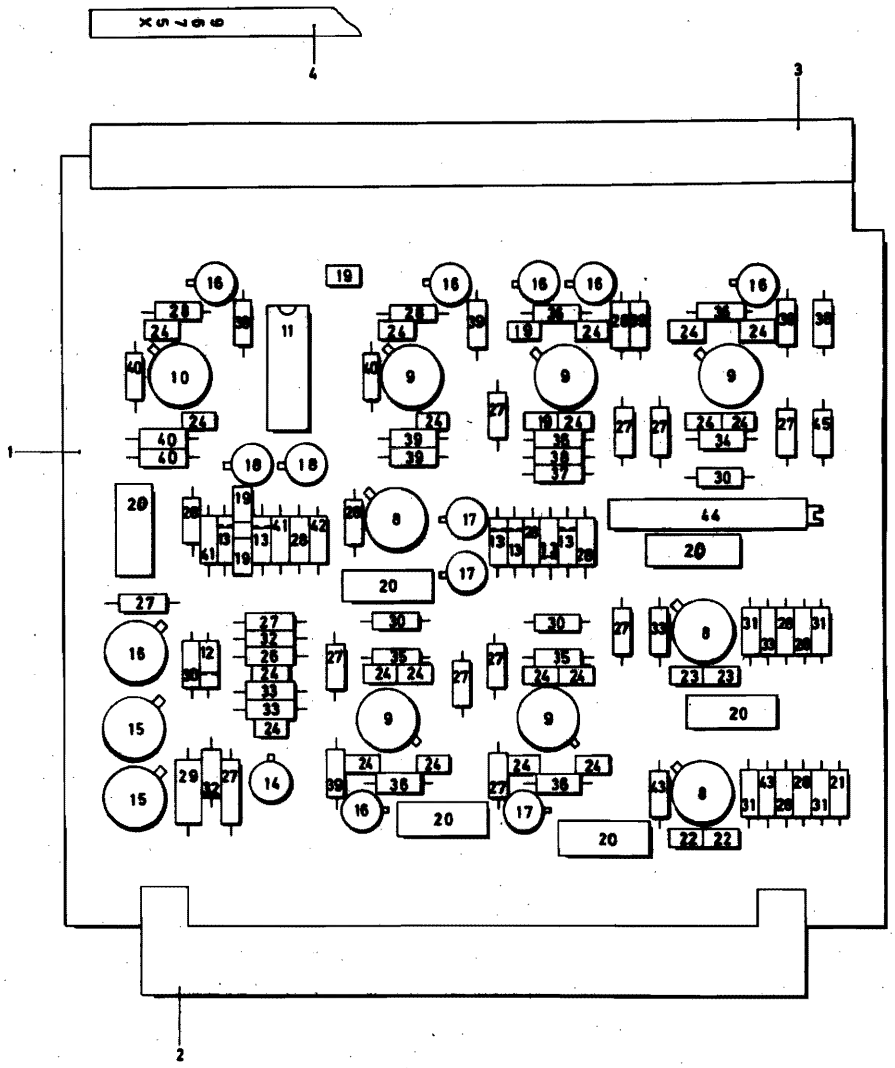

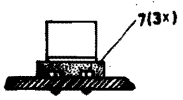

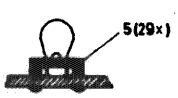



Item nr	Part number	Description	Qty. per ass'y
A	5122 299 13700	Final assembly	1
B	5122 289 96750	PCBA, window 1M67	1
1C	5122 200 36830	Board, 2127	1
2C	2422 025 89116	Connector, 64 po/c, F054	1
3C	4022 191 06080	Front strip	1
4C		Text strip	
5C	3522 103 77401	Base, Capacitor	29
6C	9390 155 30715	Foot, Transistor, TO-18	11
7C	4022 027 35021	Foot, Transistor, TO-5	3
8C	9331 370 00112	Integrated circuit, TBA 221	3
9C	5122 000 05170	Integrated circuit, µA711C	4
10C	9331 057 90682	Integrated circuit, µA710C	2
11C	9380 000 60000	Integrated circuit, SN7404N	1
12C	9331 177 40112	Diode, BZX79-C6V2	1
13C	9330 228 60112	Diode, BAX13	6
14C	9330 566 60112	Transistor, BCY 87	1
15C	9330 226 40112	Transistor, 2N2905	2
16C	9330 219 20112	Transistor, B5x20	8
17C	9331 331 70112	Transistor, BSV79	2
18C	9330 441 00112	Transistor, BCY70	2
19C	2222 629 02103	Capacitor, CER, 10.000pF -20/+100% 40V	5
20C	2222 344 90101	Capacitor, MRD, 0,1 µF 10% 100V	4
21C	2222 143 15338	Capacitor, Tantalum, 3,3 µF 20% 15V	1
22C	2222 630 01222	Capacitor, CER, 2200 pF, 10% 100V	2
23C	2222 630 01122	Capacitor, CER, 1200 pF, 10% 100V	2
24C	2222 629 02103	Capacitor, CER, 10.000 pF -20/+100% 40V	5
25C			
26C	2322 151 52151	Resistor, 215 ohm, 1% 125mW	1
27C	2322 151 51002	Resistor, 1K, 1% 125mW	12
28C	2322 151 54642	Resistor, 4K64, 1% 125mW	10
29C	2322 151 56819	Resistor, 68E1, 1% 125mW	1
30C	2322 151 55621	Resistor, 562 ohm, 1% 125mW	4
31C	2322 151 55622	Resistor, 5K62, 1% 125mW	4
32C	2322 151 51211	Resistor, 121 ohm, 1% 125mW	2
33C	2322 151 54641	Resistor, 464 ohm, 1% 125mW	4
34C	2322 151 54649	Resistor, 316 ohm, 1% 125mW	1
35C	2322 151 53161	Resistor, 316 ohm, 1% 125mW	2
36C	2322 151 51782	Resistor, 1K78, 1% 125mW	5
37C	2322 151 58251	Resistor, 825 ohm, 1% 125mW	1
38C	2322 151 51212	Resistor, 1K21, 1% 125mW	2
39C	2322 151 51002	Resistor, 1K, 1% 125mW	9
40C	2322 151 56812	Resistor, 6K81, 1% 125mW	2
41C	2322 151 54643	Resistor, 46K4, 1% 125mW	2
42C	2322 151 52152	Resistor, 2K15, 1% 125mW	1
43C	2322 151 51473	Resistor, 14K7, 1% 125mW	2
44C	2122 350 00003	Potentiometer, 2K 1W	1
45C	2322 151 51001	Resistor, 100 ohm 1% 125mW	1

PCBA MEANDER

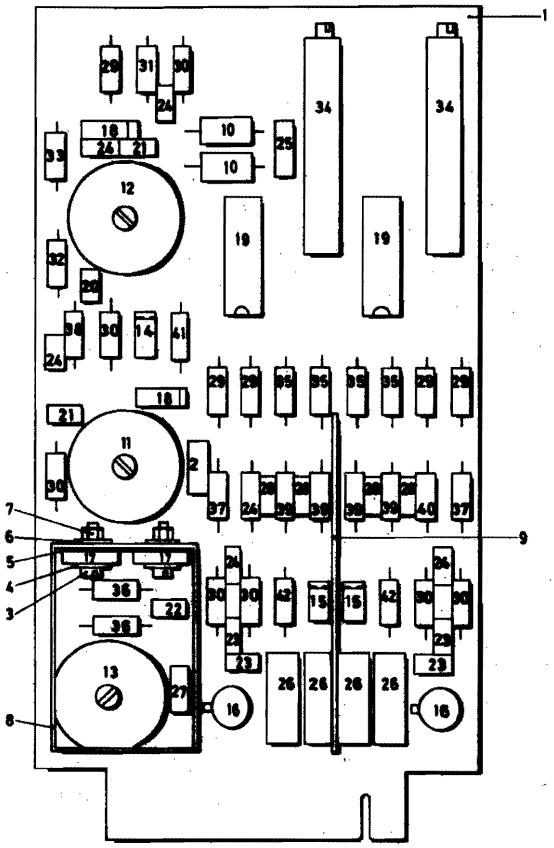

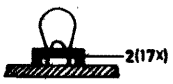

Item nr	Part number	Description	Qty. per ass'y
A	5122 299 13700	Final assembly	1
B	5122 282 51550	PCBA Meander	1
1C	5122 223 31550	Board	1
2C	3522 103 77401	Base, capacitor	17
3C	2522 004 02025	Screw, M3x8	2
4C	2522 600 16017	Washer, 3,2x7	2
5C	5122 200 05380	Ring, Mica	2
6C	2522 613 01005	Spring ring	2
7C	2522 401 60008	Nut, M3	2
8C	5122 200 04420	Screening housing	1
9C	5122 200 04410	Screening plate	1
10C	2422 535 00221	Coil, 220 uH	2
11C	5122 289 83420	Potcore, Assy	1
12C	5122 289 83400	Potcore, Assy	1
13C	5122 289 83440	Potcore, Assy	1
14C	9331 321 10112	Diode, BZX75 - C1V4	1
15C	9331 177 30112	Diode, BZX79 - C5V6	2
16C	9330 912 60112	Transistor, BCY87	2
17C	9330 912 20112	Transistor, BD139	2
18C	9330 886 10112	Transistor, BSW69	2
19C	9331 726 90682	Integrated circuit, CA 3054	2
20C	2222 631 58569	Capacitor, CER, 56pF ± 2%, 63V	1
21C	2222 631 58101	Capacitor, CER, 100pF ± 2%, 63V	2
22C	2222 630 01681	Capacitor, CER, 680pF ± 10%, 100V	1
23C	2222 630 01332	Capacitor, CER, 3300pF ± 10%, 100V	4
24C	2222 629 02103	Capacitor, CER, 10000pF -20/+100% 40V	5
25C	2222 629 03223	Capacitor, CER, 22000pF -20/+100% 40V	2
26C	2222 344 41223	Capacitor, MPR, 0.022 uF ± 10% 250V	4
27C	2222 143 17108	Capacitor, Electrolytetantalum 1 uF ±20% 35V	1
28C	2222 631 10109	Capacitor, CER, 10pF ± 2% 63V	4
29C	2322 151 53832	Resistor, 3K83 ± 1% 125mW	5
30C	2322 151 55622	Resistor, 5K62 ± 1% 125mW	7
31C	2322 151 54642	Resistor, 4K64 ± 1% 125mW	1
32C	2322 151 58252	Resistor, 8K25 ± 1% 125mW	1
33C	2322 151 52613	Resistor, 26K1 ± 1% 125mW	1
34C	2122 350 00034	Potentiometer, 200 ohm 1W	2
35C	2322 151 51009	Resistor, 10 ohm 1% 125mW	4
36C	2322 151 52619	Resistor, 26E1 1% 125mW	2
37C	2322 151 51001	Resistor, 100 ohm 1% 125mW	2
38C	2322 151 51471	Resistor, 147 ohm 1% 125mW	1
39C	2322 151 53831	Resistor, 383 ohm 1% 125mW	4
40C	2322 151 51002	Resistor, 1K 1% 125mW	2
41C	2322 151 58251	Resistor, 825 ohm 1% 125mW	1
42C	2322 151 53162	Resistor, 3K16 1% 125mW	2

PCBA, READ RECOVERY 1M63

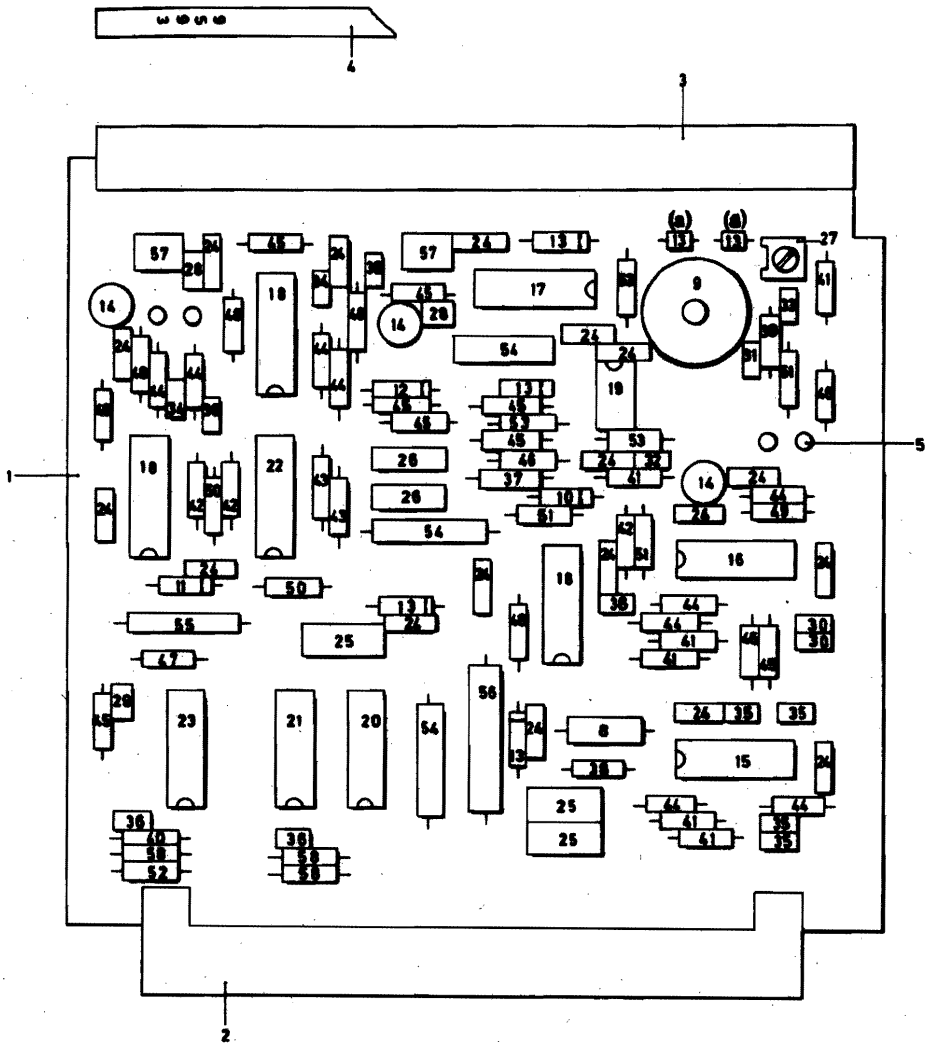



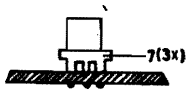

Item nr	Part number	Description	Qty. per ass'y
A	5122 299 13700	Final Assembly	1
B	5122 289 95930	PCBA, Read Recovery 1M63	1
1C	5122 200 36030	Board, 2120	1
2C	2422 025 89116	Connector, 64-pole, F054	1
3C	4022 191 06080	Front-strip	1
4C	5122 200 44420	Text-strip, 1M63	1
5C	2422 034 10892	Pin, locking	4
6C	3522 103 77401	Base, capacitor	18
7C	9390 155 30112	Foot, transistor, TO-18	3
8C	2420 535 00221	Coil, Micro choke, 220/uH	1
9C	5122 283 31110	Pot core, assy, 40/uH	1
10C	9331 185 60112	Diode, BAV10	1
11C	9331 177 10112	Diode, BZX79-C4V7	1
12C	9331 177 30112	Diode, BZX79-C5V6	1
13C	9331 177 40112	Diode, BZX79-C6V2	4
13C-(a)	9331 377 40112	Varicap, 4BB106	1/2
14C	9330 219 80112	Transistor, BSX20	3
15C	9331 261 20682	Integrated circuit, U6A.7760.393	1
16C	9331 057 70682	Integrated circuit, U6A.7711.393	1
17C	9331 085 80682	Integrated circuit, U6A.7733.393	1
18C	9331 648 00682	Integrated circuit, U6A.7710.393	3
19C	9332 174 90682	Integrated circuit, U9T.7741.393	1
20C	9380 003 20000	Integrated circuit, SN7474N	1
21C	9380 009 50000	Integrated circuit, SN7438N	1
22C	9331 701 20112	Integrated circuit, GJH231	1
23C	9380 005 40000	Integrated circuit, SN74121N	1
24C	2222 629 03223	Capacitor, CER, 22nF, -20/+100% 40V	18
25C	2222 344 90101	Capacitor, MPR, 0,1/uF, 10% 100V	3
26C	2222 426 45101	Capacitor, Micropoco, 510 pF, 1% 250V	2
27C	2222 809 05003	Capacitor, trimmer, 18pF	1
28C	2222 631 10109	Capacitor, CER, 10pF, 2% 100V	2
29C	2222 631 10399	Capacitor, CER, 39pF, 2% 63V	1
30C	2222 631 10101	Capacitor, CER, 100pF, 2% 63V	2
31C	2222 631 70391	Capacitor, CER, 390pF, 2% 63V	1
32C	2222 630 01122	Capacitor, CER, 1200pF, 10% 100V	1
33C	2222 630 01222	Capacitor, CER, 2200pF, 10% 100V	1
34C	2222 630 01332	Capacitor, CER, 3300pF, 10% 100V	2
35C	2222 630 01472	Capacitor, CER, 4700pF, 10% 100V	4
36C	2222 629 01103	Capacitor, CER, 10nF, -20/+100% 40V	4
37C	2322 151 51009	Resistor, 10 ohm, 1% 125mW	1
38C	2322 151 52159	Resistor, 21,5 ohm, 1% 125mW	1
39C	2322 151 53169	Resistor, 31,6 ohm, 1% 125mW	1
40C	2322 151 55629	Resistor, 56,2 ohm, 1% 125mW	1
41C	2322 151 51001	Resistor, 100 ohm, 1% 125mW	6
42C	2322 151 54641	Resistor, 464 ohm, 1% 125mW	3
43C	2322 151 55621	Resistor, 562 ohm, 1% 125mW	2
44C	2322 151 58251	Resistor, 825 ohm, 1% 125mW	9
45C	2322 151 51002	Resistor, 1K, 1% 125mW	9
46C	2322 151 51212	Resistor, 1K21, 1% 125mW	2

PCBA, READ RECOVERY 1M63

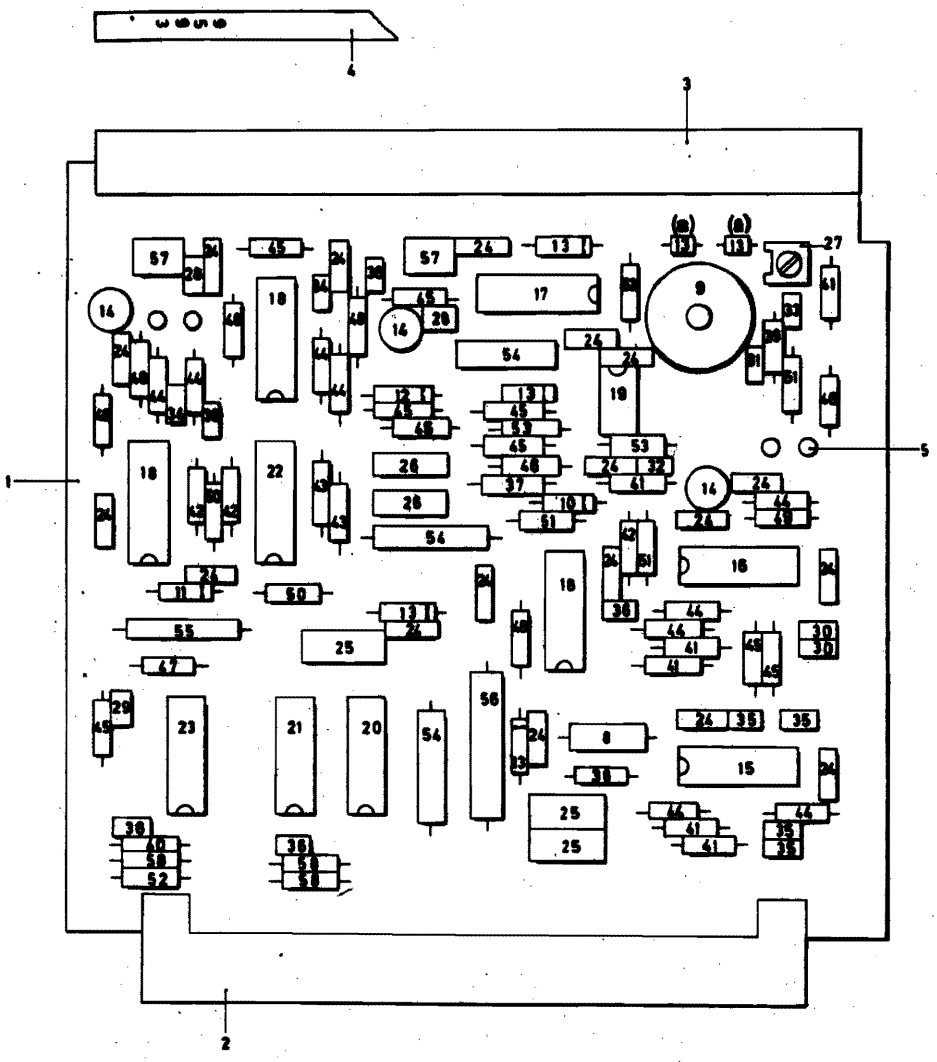



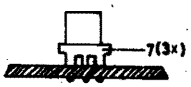

Item nr	Part number	Description	Qty. per ass'y
47C	2322 151 52152	Resistor, 2K15, 1% 125mW	1
48C	2322 151 52612	Resistor, 2K61, 1% 125mW	5
49C	2322 151 53832	Resistor, 3K83, 1% 125mW	1
50C	2322 151 54642	Resistor, 4K64, 1% 125mW	2
51C	2322 151 55622	Resistor, 5K62, 1% 125mW	3
52C	2322 151 51003	Resistor, 10K, 1% 125mW	1
53C	2322 151 51213	Resistor, 12K1, 1% 125mW	3
54C	2322 153 51471	Resistor, 147 ohm, 1% 500mW	3
55C	2322 153 52151	Resistor, 215 ohm, 1% 500mW	1
56C	2322 171 18259	Resistor, 82,5 ohm, 1% 750mW	1
57C	2113 375 00056	Potentiometer, 5K	2
58C	2322 151 53831	Resistor, 383 ohm, 1% 125mW	3

PCBA, INTERFACE - 2L00

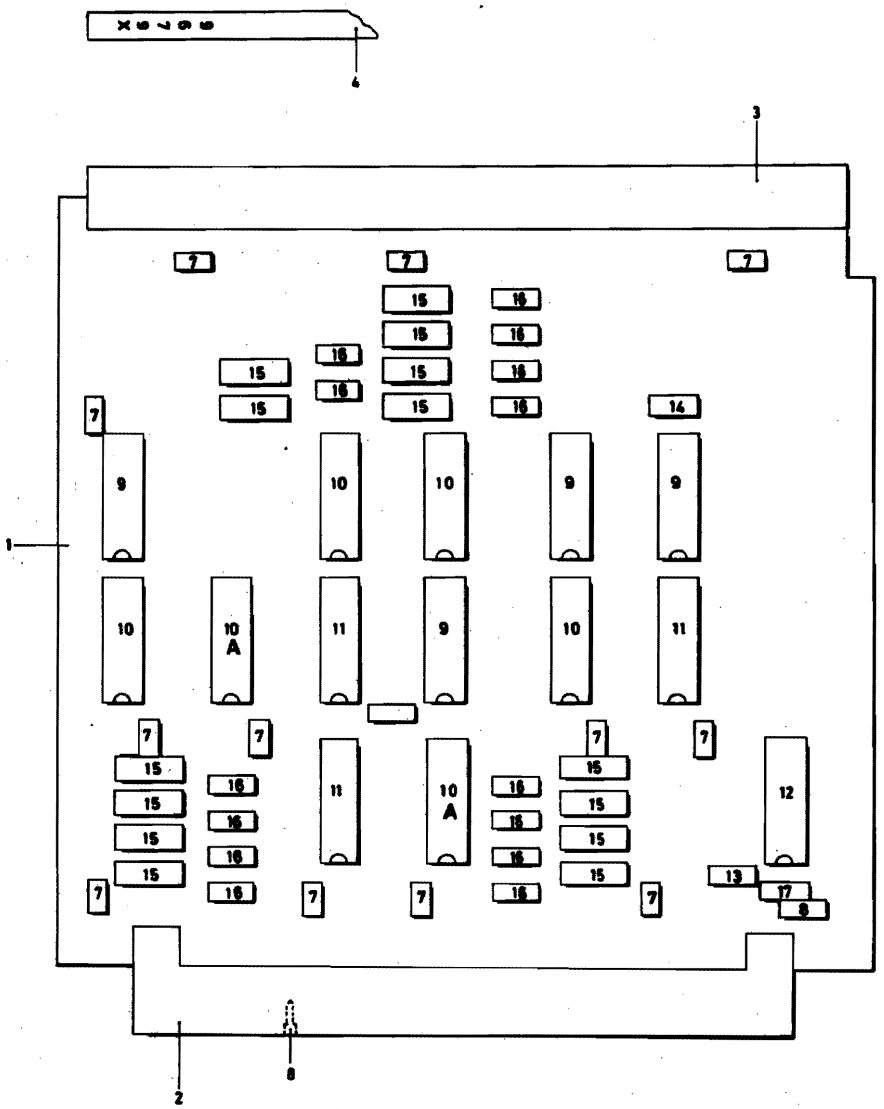



Item nr	Part number	Description	Qty. per ass'y
A	5122 299 13700	Final assembly	1
B	5122 289 96790	PCBA, interface - 2L00	1
1C	5122 200 36870	Board, 4246	1
2C	2422 025 89116	Connector, 64-pole, F054	1
3C	4022 191 06080	Front-strip	1
4C		Text-strip	1
5C	3522 103 77401	Base, capacitor	12
6C	4332 026 10840	Pin, locking	1
7C	2222 629 02103	Capacitor, CER, 10.000pF, -20/+100% 40V	12
8C	2222 143 15338	Capacitor, Electrolyte Tantalium, 3,3 uF 20% 15V	1
9C	9380 000 00000	Integrated circuit, SN7400N	4
10C	9380 005 60000	Integrated circuit, SN74132N	4
10C-A	9380 000 60000	Integrated circuit, SN7404N	2
11C	9380 009 50000	Integrated circuit, SN7438N	3
12C	9380 018 20000	Integrated circuit, SN74H00N	1
13C	2322 151 53169	Resistor, 31,6 ohm, 1% 125mW	1
14C	2322 151 58251	Resistor, 825 ohm, 1% 125mW	2
15C	2322 152 51471	Resistor, 147 ohm, 1% 250mW	14
16C	2322 151 55621	Resistor, 562 ohm, 1% 125mW	14
17C	2322 151 53832	Resistor, 3K83, 1% 125mW	1

PCBA, VX 1M65

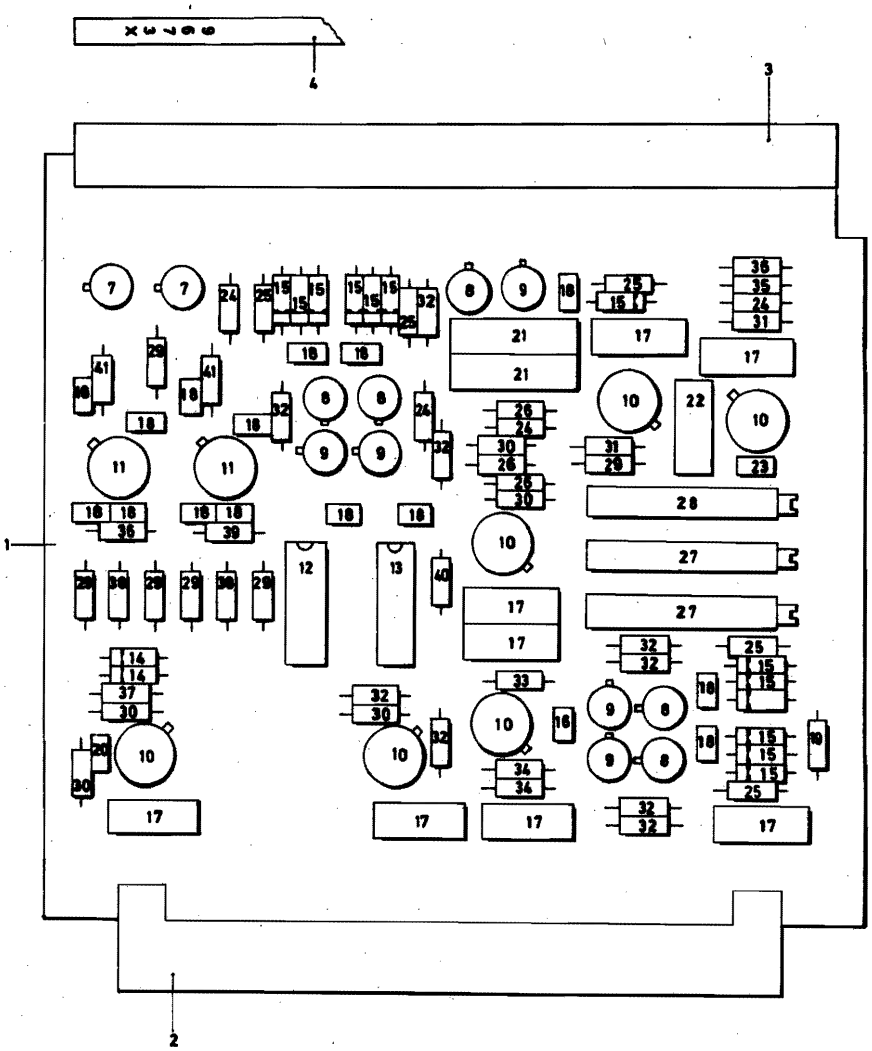





Item nr	Part number	Description	Qty. per ass'y
A	5122 299 13700	Final assembly	1
B	5122 289 96730	PCBA, 1M65	1
1C	5122 200 36810	Board, 2125	1
2C	2422 025 89116	Connector, 64-pole, F054	1
3C	4022 191 06080	Front-strip	1
4C	5122 200 44490	Text-strip, 1M65	1
5C	9390 155 30715	Foot, Transistor, TO-18	12
6C	3522 103 77401	Base, capacitor,	18
7C	9330 219 20112	Transistor, BSX20	2
8C	9330 441 00112	Transistor, BCY70	5
9C	9331 331 70112	Transistor, BSV79	5
10C	9331 370 00112	Integrated circuit, TBA 221	6
11C	5122 000 05170	Integrated circuit, µA711C	2
12C	9380 000 60000	Integrated circuit, SN7404N	1
13C	9380 000 00000	Integrated circuit, SN7400N	1
14C	9331 321 40112	Stabistor, BZX75 - C3V6	2
15C	9330 228 60112	Diode, BAX 13	13
16C	2222 630 01222	Capacitor, CER, 2200pF, 10% 100V	1
17C	2222 344 90101	Capacitor, MPR, 0,1 µF, 10% 100V	8
18C	2222 629 02103	Capacitor, CER, 10000pF, -20/100% 40V	15
19C	2222 143 15338	Capacitor, EL.Tantalium, 3,3 µF, 20% 15V	1
20C	2222 630 01332	Capacitor, CER, 3300pF, 10% 100V	1
21C	2222 344 21334	Capacitor, MPR, 0,33 µF, 10% 100V	2
22C	2222 344 41103	Capacitor, MPR, 0,01 µF, 10% 250V	1
23C	2222 630 01102	Capacitor, CER, 1000pF, 10% 100V	1
24C	2322 151 51783	Resistor, 17K8, 1% 125mW	4
25C	2322 151 54643	Resistor, 46K4, 1% 125mW	4
26C	2322 151 52153	Resistor, 21K5, 1% 125mW	3
27C	2122 350 00003	Potentiometer, 2K, 1W	2
28C	2122 350 00035	Potentiometer, 1K, 1W	1
29C	2322 151 51002	Resistor, 1K, 1% 125mW	6
30C	2322 151 52151	Resistor, 2K15, 1% 125mW	5
31C	2322 151 51003	Resistor, 10K, 1% 125mW	2
32C	2322 151 54642	Resistor, 4K64, 1% 125mW	9
33C	2322 151 53832	Resistor, 3K83, 1% 125mW	1
34C	2322 151 51473	Resistor, 14K7, 1% 125mW	2
35C	2322 151 51001	Resistor, 100 ohm, 1% 125mW	1
36C	2322 151 51212	Resistor, 1K21, 1% 125mW	2
37C	2322 151 55623	Resistor, 56K2, 1% 125mW	1
38C	2322 151 55621	Resistor, 562 ohm, 1% 125mW	2
39C	2322 151 51781	Resistor, 178 ohm, 1% 125mW	1
40C	2322 151 58251	Resistor, 825 ohm, 1% 125mW	1
41C	2322 151 51782	Resistor, 1K78, 1% 125mW	2

PCBA, PA - 1A22

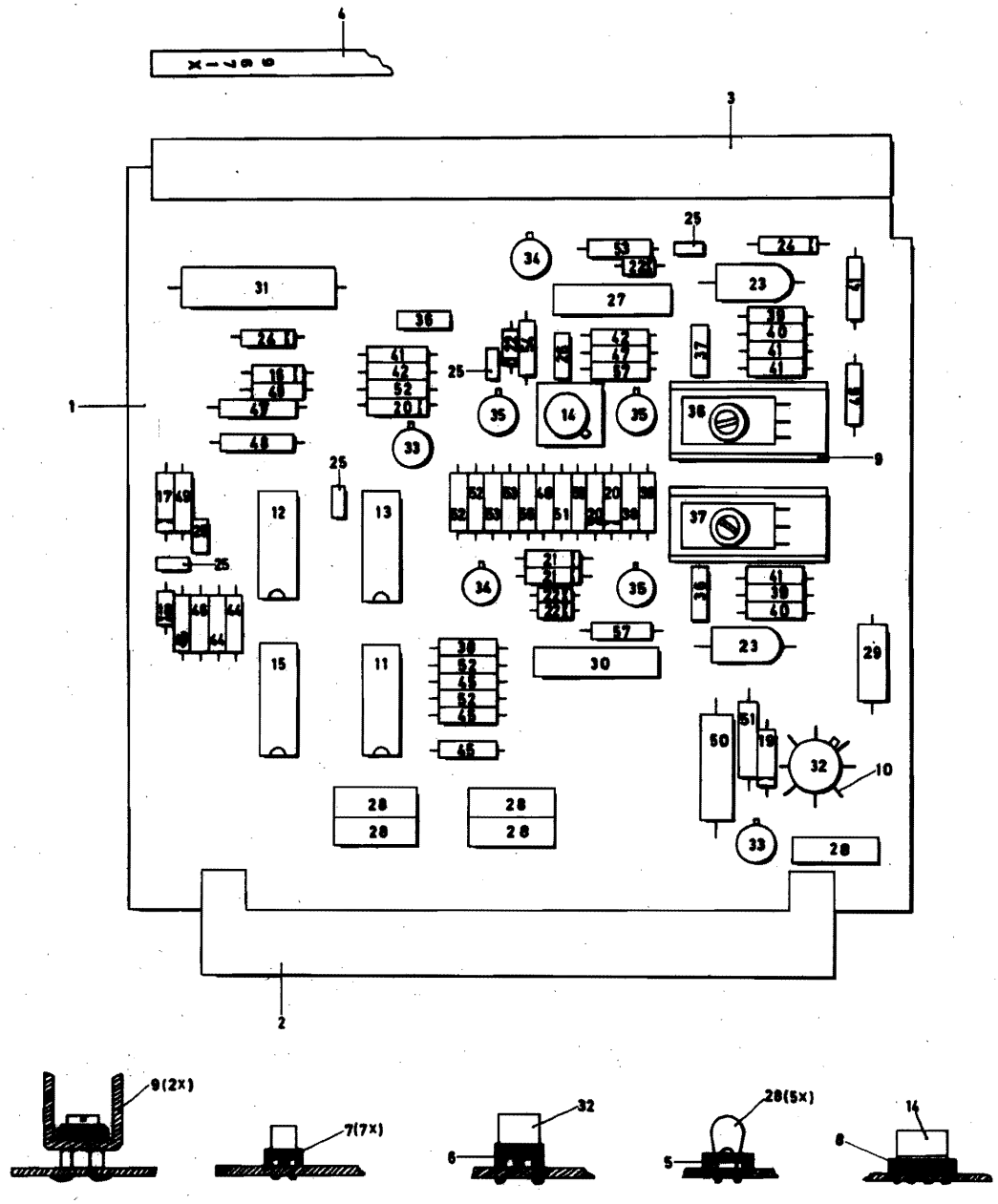

Item nr	Part number	Description	Qty. per ass'y
A	5122 299 13700	Final assembly	1
B	5122 289 96710	PCBA, 1A22-PA	1
1C	5122 200 36790	Board, 2123	1
2C	2422 025 89116	Connector, 64P-F054	1
3C	4022 191 06080	Front-strip	1
4C		Text-strip	1
5C	3522 103 77401	Base, capacitor	5
6C	4322 026 71861	Foot, transistor, TO-5	1
7C	9390 155 30112	Foot, transistor, TO-18	7
8C	2413 490 00015	Foot, Integrated circuit	1
9C	5122 200 00160	Cooling fin, TO-126	2
10C	9390 154 50112	Heat-sink, TO-5	1
11C	9380 000 70000	Integrated circuit, FJH251/SN7504N	1
12C	9380 001 10000	Integrated circuit, FJL131/SN7413N	1
13C	9380 000 00000	Integrated circuit, FJH131/SN7400N	1
14C	9331 370 00112	Integrated circuit, TBA221	1
15C	9380 000 60000	Integrated circuit, FJH241/SN7404N	1
16C	9330 092 20112	Diode, BZY88-C3V3	1
17C	9331 321 30112	Diode, BZX75-C2V8	1
18C	9331 177 10112	Diode, BZX79-C4C7	1
19C	9330 092 50112	Diode, BZY88-C4V3	1
20C	9331 321 10112	Diode, BZX75-C1V4	3
21C	9331 321 40112	Diode, BZX75-C3V6	2
22C	9331 012 20112	Diode, BAW62	4
23C	9330 216 70112	Diode, BY126	2
24C	9330 458 51112	Diode, BYX36/600	2
25C	2222 629 01103	Capacitor, CER, 10nF -20/+100% 40V	5
26C	2222 629 03223	Capacitor, CER, 22nF -20/+100% 40V	1
27C	2222 344 21474	Capacitor, MPR, 047 /uF ± 10% 100V	1
28C	2222 344 90101	Capacitor, MPR, 0,1 /uF ± 10% 100V	5
29C	2222 143 14339	Capacitor, Electrolytic, 33 /uF ± 20% 10V	1
30C	2222 344 21334	Capacitor, MPR, 0,33 /uF ± 10% 100V	1
31C	2222 121 17478	Capacitor, Electrolytic, 4,7 /uF ±20%,40V	1
32C	9330 978 10112	Transistor, BSW67	1
33C	9331 723 30112	Transistor, BCY59	2
34C	9330 441 00112	Transistor, BCY70	2
35C	9331 331 70112	Transistor, BSV79	3
36C	9330 912 30112	Transistor, BD140	3
37C	9330 912 20112	Transistor, BD139	2
38C	2322 151 52151	Resistor, 215 ohm, 1% 125mW	3
39C	2322 151 53161	Resistor, 316 ohm, 1% 125mW	2
40C	2322 151 54649	Resistor, 46,4 ohm, 1% 125mW	3
41C	2322 151 51001	Resistor, 108 ohm, 1% 125mW	5
42C	2322 151 58259	Resistor, 82,5 ohm, 1% 125mW	1
43C	2322 151 52612	Resistor, 2K61, 1% 125mW	1
44C	2322 151 51472	Resistor, 1K47, 1% 125mW	2
45C	2322 151 56812	Resistor, 6K81, 1% 125mW	3
46C	2322 151 51212	Resistor, 1K21, 1% 125mW	2
47C	2322 152 51003	Resistor, 10K, 1% 250mW	2
48C	2322 152 51002	Resistor, 1K, 1% 250mW	2

PCBA, PA - 1A22

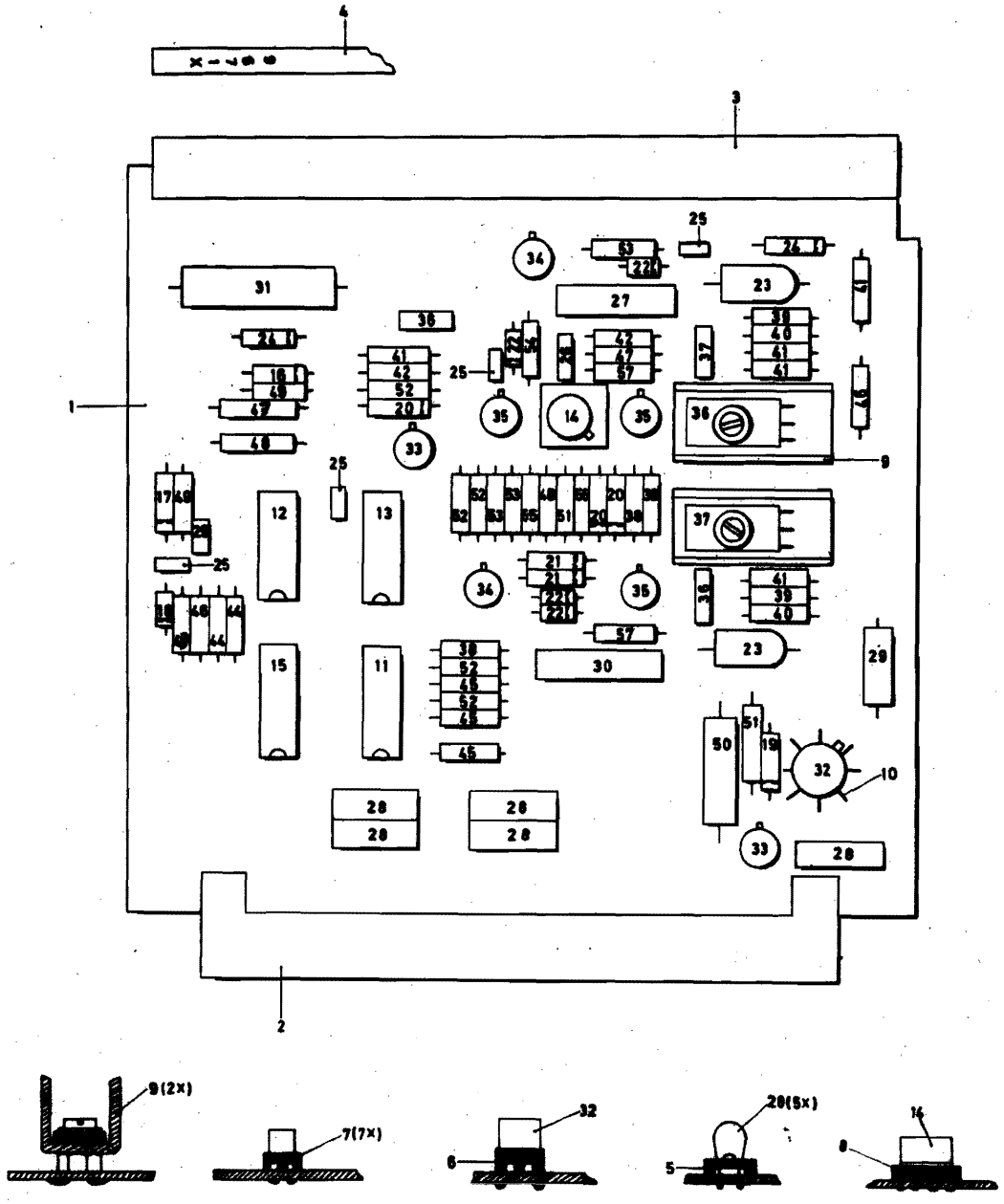

Item nr	Part number	Description	Qty. per ass'y
49C	2322 151 54641	Resistor, 464 ohm, 1% 125mW	2
50C	2322 325 37181	Resistor, 180 ohm, 5% 500mW	1
51C	2322 152 54642	Resistor, 4K64, 1% 250mW	1
51C-A	2322 151 54642	Resistor, 4K64, 1% 125mW	1
52C	2322 151 52152	Resistor, 2K15, 1% 125mW	5
53C	2322 151 54643	Resistor, 46K4, 1% 125mW	3
54C	2322 151 58252	Resistor, 8K25, 1% 125mW	1
55C	2322 151 56811	Resistor, 681 ohm, 1% 125mW	1
56C	2322 151 51009	Resistor, 10 ohm, 1% 125mW	1
57C	2322 151 53832	Resistor, 3K83, 1% 125mW	2

PCBA SECTOR DC 1L99

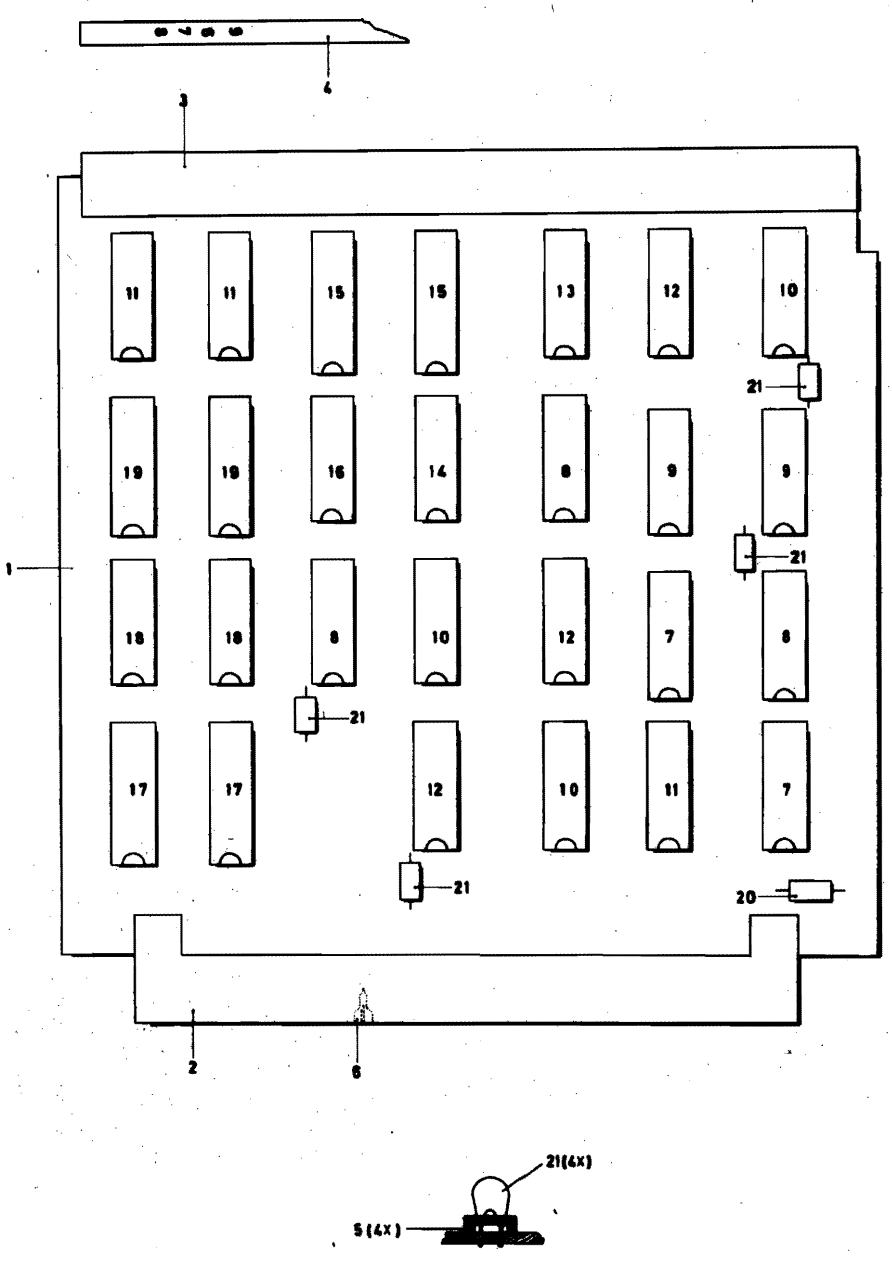

Item nr	Part number	Description	Qty. per ass'y
A	5122 299 13700	Final assembly	1
B	5122 289 96780	PCBA 1L99	1
1C	5122 200 36860	Board, 4245	1
2C	2422 025 89116	Connector, 64-pole, F054	1
3C	4022 191 06080	Front-strip	1
4C	5122 200 44440	Text-strip 1L99	1
5C	3522 103 77401	Base, capacitor	4
6C	4332 026 10840	Key pin	1
7C	9380 000 20000	Integrated circuit, SN7402N	2
8C	9380 000 60000	Integrated circuit, SN7404N	3
9C	9380 002 70000	Integrated circuit, SN7454N	2
10C	9380 000 00000	Integrated circuit, SN7400N	3
11C	9380 004 00000	Integrated circuit, SN7486N	3
12C	9380 003 20000	Integrated circuit, SN7474N	3
13C	9380 003 60000	Integrated circuit, SN7482N	1
14C	9380 001 40000	Integrated circuit, SN7420N	1
15C	9380 014 10000	Integrated circuit, SN7419N	2
16C	9380 001 80000	Integrated circuit, SN7430N	1
17C	9380 003 30000	Integrated circuit, SN7475N	2
18C	9380 014 50000	Integrated circuit, SN74197N	2
19C	9380 003 70000	Integrated circuit, SN7483N	2
20C	2222 143 15338	Capacitor, Electrolyte Ta,3,3/uF,15V,20%	1
21C	2222 629 02103	Capacitor, CER, 10nF, -20/+100%, 40V	4

PCBA 1M64 - LCE

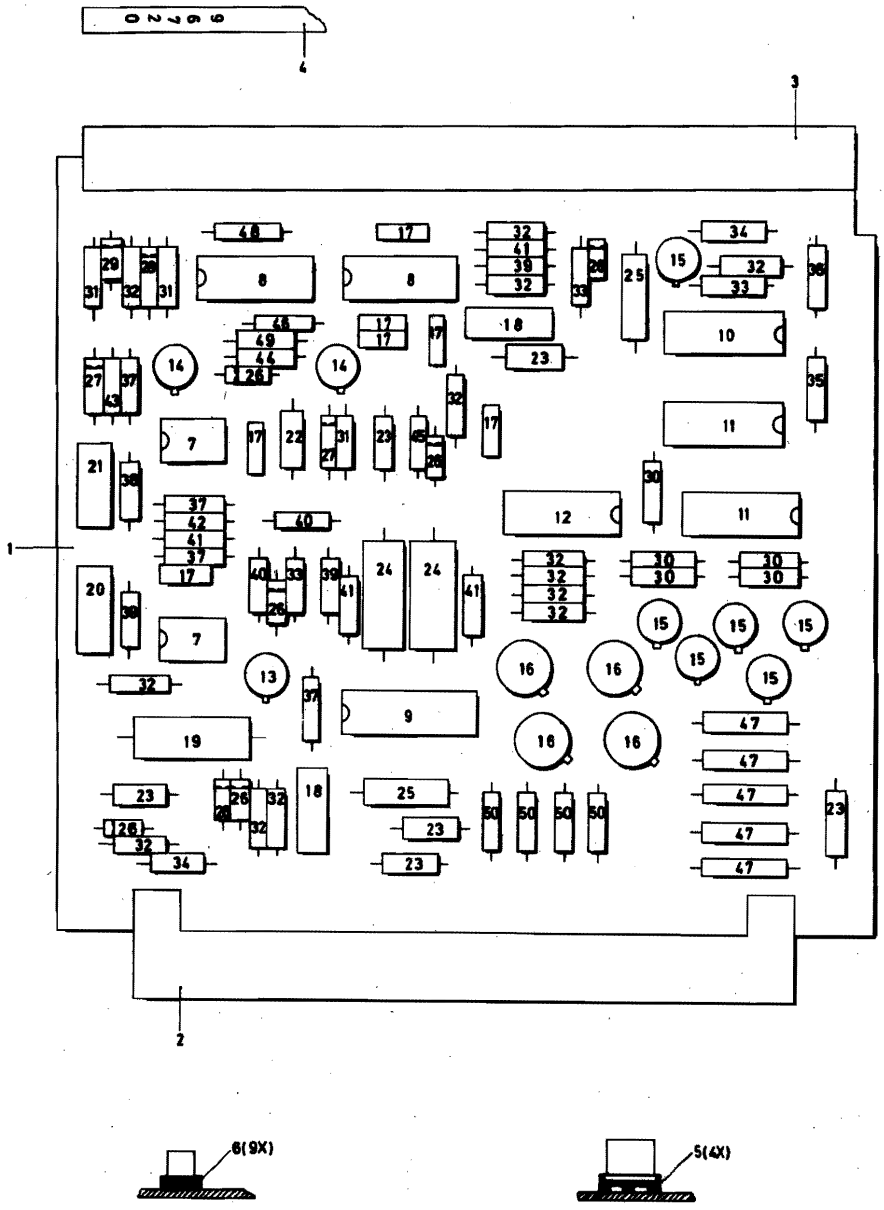

Item nr	Part number	Description	Qty. per ass'y
A	5122 299 13700	Final assembly	1
B	5122 289 96720	PCBA, 1M64-LCE	1
1C	5122 200 36800	Board, 2124	1
2C	2422 025 89116	Connector, 64-pole, F054	1
3C	4022 191 06080	Front-strip	1
4C		Text-strip	1
5C	4322 026 71861	Foot, transistor, TO-5	4
6C	9390 155 30112	Foot, transistor, TO-18	9
7C	9332 174 90682	Integrated circuit, µA741C	2
8C	9331 648 00682	Integrated circuit, µA710C	2
9C	9380 005 50000	Integrated circuit, SN74123N	1
10C	9380 001 10000	Integrated circuit, SN7413N	1
11C	9380 000 60000	Integrated circuit, SN7404N	2
12C	9380 000 70000	Integrated circuit, SN7405N	1
13C	9331 331 70112	Transistor, BSV79	1
14C	9330 441 00112	Transistor, BCY70	9
15C	9331 722 80112	Transistor, BCY58	6
16C	9330 978 10112	Transistor, BSW67	4
17C	2222 629 03223	Capacitor, CER, 22nF -20/+100% 40V	7
18C	2222 344 41103	Capacitor, MPR, 0,01 µF 10% 250V	2
19C	2222 143 16101	Capacitor, Electrolyte Tant, 100 µF 20V	1
20C	2222 344 90101	Capacitor, MPR, 0,1 µF, 10%, 100V	1
21C	2222 344 21224	Capacitor, MPR, 0,22 µF, 10%, 100V	1
22C	2222 143 14478	Capacitor, Electrolyte, Tant, 4,7 µF 20% 10V	1
23C	2222 143 15338	Capacitor, Electrolyte, Tant, 3,3 µF, 20% 15V	6
24C	2222 435 48202	Capacitor, 8,2nF, 1%, 63V	2
25C	2222 143 17688	Capacitor, Electrolyte, Tant, 6,8 µF 20% 35V	2
26C	9331 012 20112	Diode, BAW 62	7
27C	9330 092 30112	Diode, BZY88-C3V6	2
28C	9331 321 10112	Stabistor, BZx75 - C1V4	1
29C	9331 177 10112	Diode, BZx79 - C4V7	1
30C	2322 151 56811	Resistor, 681 ohm, 1%, 125mW	5
31C	2322 151 51472	Resistor, 1K47, 1%, 125mW	3
32C	2322 151 51002	Resistor, 1K, 1%, 125mW	13
33C	2322 151 55623	Resistor, 56K2, 1%, 125mW	3
34C	2322 151 55622	Resistor, 5K62, 1%, 125mW	2
35C	2322 151 51001	Resistor, 100 ohm, 1%, 125mW	1
36C	2322 151 51212	Resistor, 1K21, 1%, 125mW	1
37C	2322 151 51003	Resistor, 10K, 1%, 125mW	4
38C	2322 151 51004	Resistor, 100K, 1%, 125mW	1
39C	2322 151 53161	Resistor, 31K6, 1%, 125mW	3
40C	2322 151 58253	Resistor, 82K5, 1%, 125mW	2
41C	2322 151 51783	Resistor, 17K8, 1%, 125mW	4
42C	2322 151 51784	Resistor, 178K, 1%, 125mW	1
43C	2322 151 53832	Resistor, 3K83, 1%, 125mW	1
44C	2322 151 56819	Resistor, 68,1 ohm, 1%, 125mW	1

PCBA 1M64 - LCE

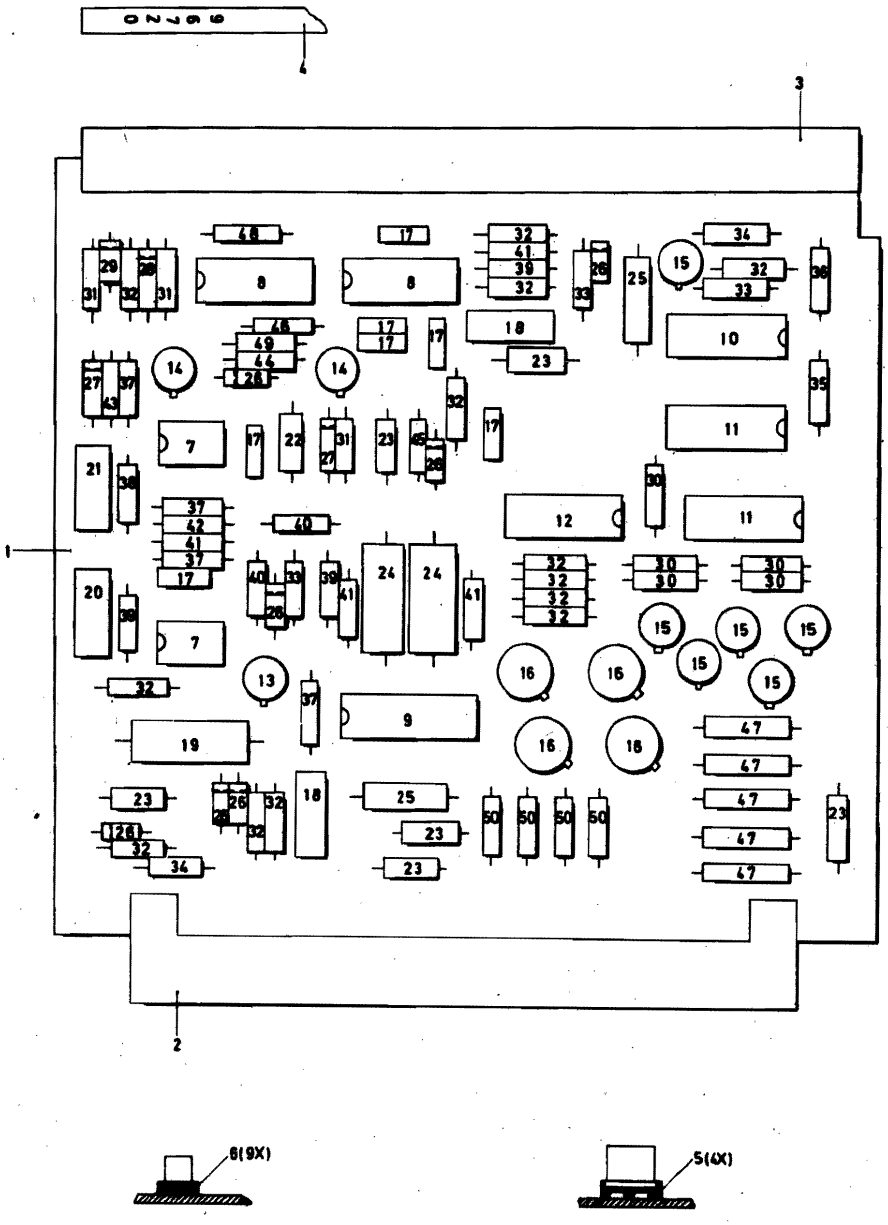

Item nr	Part number	Description	Qty. per ass'y
45C	2322 151 52152	Resistor, 2K15, 1%, 125mW	1
46C	2322 151 54642	Resistor, 4K64, 1%, 125mW	1
47C	2322 152 54641	Resistor, 464 ohm, 1%, 250mW	5
48C	2322 151 52612	Resistor, 2K61, 1%, 125mW	1
49C	2322 151 51219	Resistor, 21,1 ohm, 1%, 125mW	1
50C	2322 151 52159	Resistor, 21,5 ohm, 1%, 125mW	4

PCBA, POWER SUPPLY

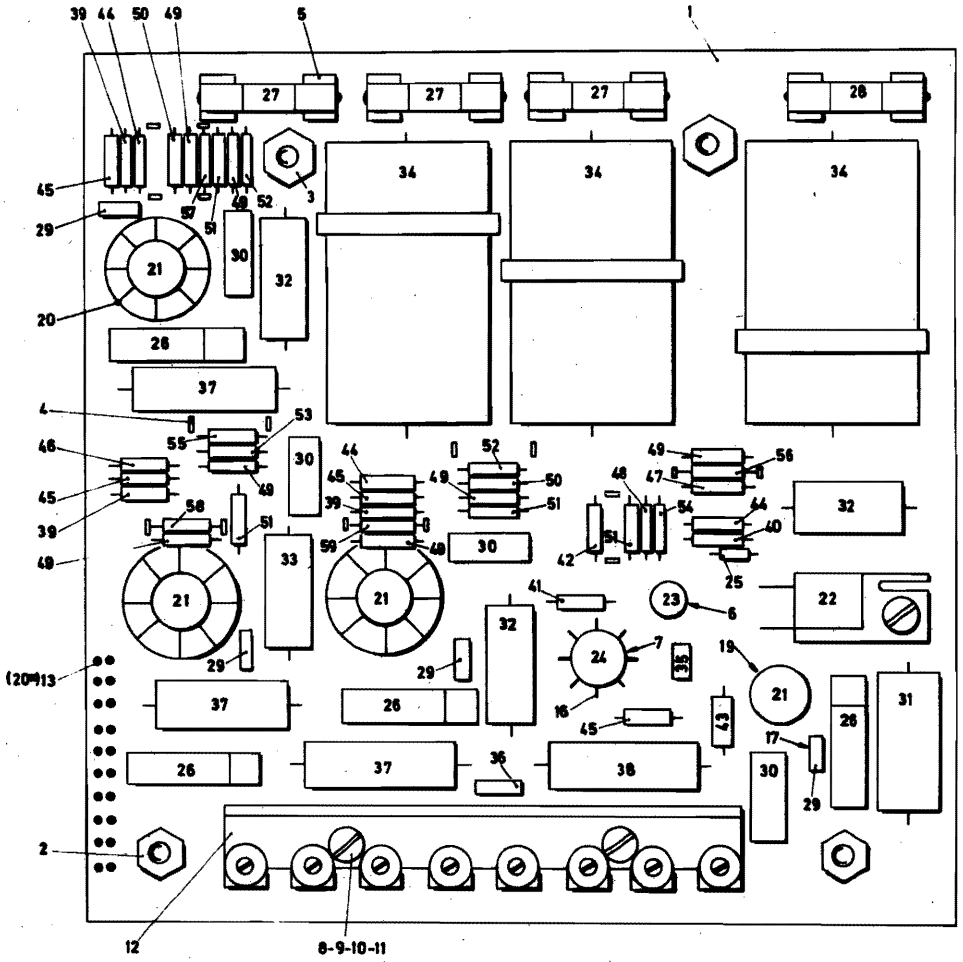

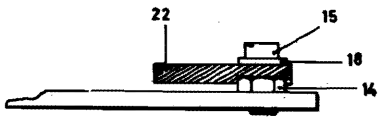

Item nr	Part number	Description	Qty. per ass'y
C	5122 299 97520	Frame assembly	1
D	5122 289 97290	PCBA, Power supply	1
1E	5122 200 35360	Board, supply section	1
2E	5122 200 38290	Nut, insert (long)	2
3E	5122 200 38300	Nut, insert (short)	2
4E	4322 027 65941	Solder tag, 0,9, CNW 3-4-1	16
5E	2412 088 00032	Fuse-holder	8
6E	3990 155 30112	Foot, transistor, TO-18	1
7E	4322 026 71861	Foot, transistor, TO-5	1
8E	2522 004 02028	Screw, M3x15, st.cd., cyl,NLN-B103	2
9E	2522 600 16017	Washer, 3,2x7, St.cd., UN-B050	2
10E	2522 613 03005	Washer, spring, 3,1x5,7,Cu.Sn.Cd., SN-B051 AX	2
11E	2522 401 60008	Nut, M3, HEX, St.Cd. UN-B020	2
12E	2422 013 00443	Connecting-block, 8-pole	1
13E	2422 034 10892	Pin, locking	20
14E	2522 424 02013	Nut, insert, M3x2,8, HEX, Ni.br. NLN-B024 AX	1
15E	2522 004 02024	Screw, M3x6, St.Cd., Cyl., NLN-B103	1
16E	9390 154 50112	Heat sink	1
17E	3522 103 77401	Base, capacitor	5
18E	2522 608 02001	Washer, earth, St. Cu.Ni., 3,2x6	1
19E	3122 021 52000	Base, Integrated circuit,	4
20E	2422 487 89016	Cooling plate, TO-5, TX-BF-032-025B	3
21E	9331 353 50112	Integrated circuit, TBA 281	4
22E	9330 985 80112	Thyristor, BT 100A	1
23E	9330 441 20112	Transistor, BCY 7,2	1
24E	9330 283 50112	Transistor, BSX 60	1
25E	9331 177 30112	Diode, BZx79 - C5V6	1
26E	9330 873 30112	Rectifier bridge, BY 164	4
27E	2422 086 01021	Fuse, 1A - 250V	3
28E	2422 086 01118	Fuse, 4A - 250V	1
29E	2222 630 01681	Capacitor, 680pf - 40V - 10%	4
30E	2222 344 90101	Capacitor, 0,1 µF - 100V - 10%	4
31E	2012 001 01006	Capacitor, 100 µF - 20V	1
32E	2012 001 00162	Capacitor, 100 µF - 16	3
33E	2222 121 16568	Capacitor, 5,6 µF - 25V	1
34E	2012 001 00197	Capacitor, 2200 µF - 40V	3
35E	2222 629 01103	Capacitor, 10 nF - 40V - -20/+100%	1
36E	2222 629 03223	Capacitor, 22 nF - 40V - -20/+100%	1
37E	2322 326 51108	Resistor, 1 ohm, 2W - 10%	3
38E	5122 021 30011	Resistor, 0,22 ohm, 5W - 10%	1
39E	2322 151 55118	Resistor, 5,11 ohm - 1% - 125mW	3
40E	2322 151 51009	Resistor, 10 ohm - % - 125mW	1
41E	2322 151 52619	Resistor, 26,1 ohm - 1% - 125mW	1
42E	2322 151 58259	Resistor, 82,5 ohm - 1% - 125mW	1
43E	2322 151 51001	Resistor, 100 ohm - 1% - 125mW	1
44E	2322 151 51211	Resistor, 121 ohm - 1% - 125mW	3
45E	2322 151 51471	Resistor, 147 ohm - 1% - 125mW	4

PCBA, POWER SUPPLY

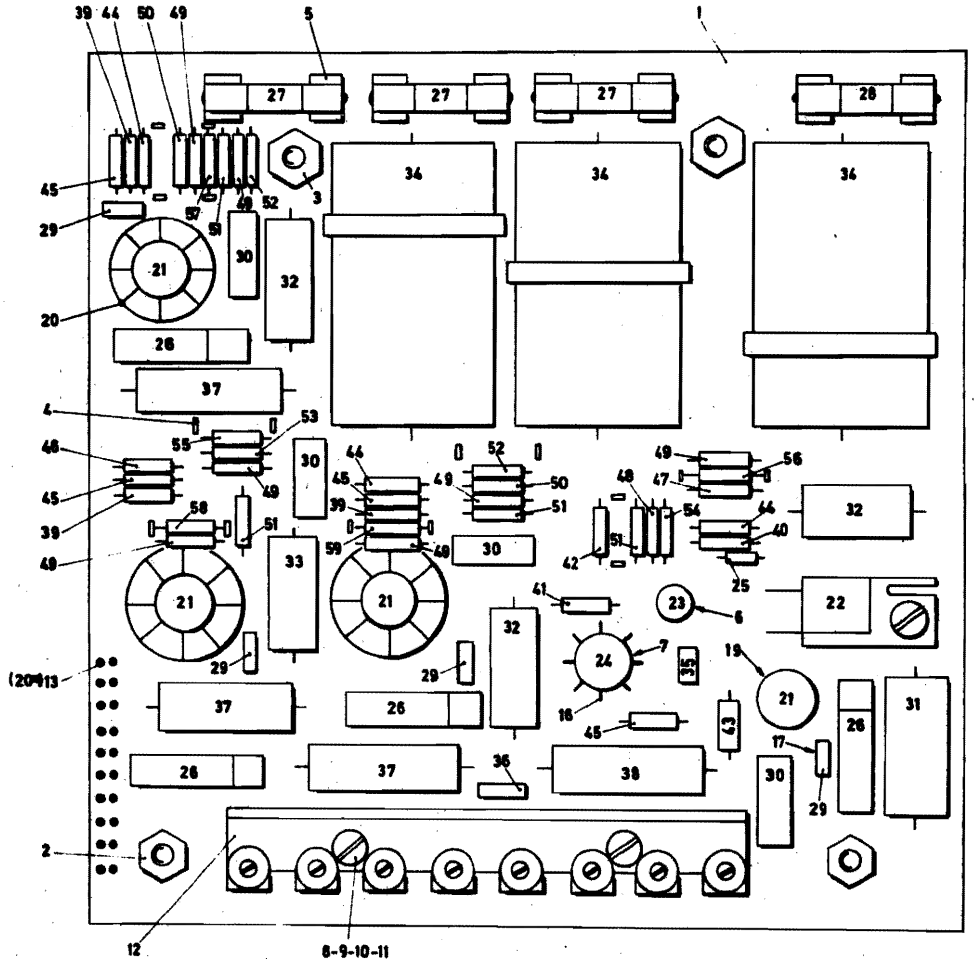

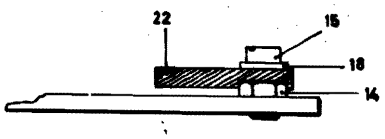

Item nr	Part number	Description	Qty. per ass'y
46E	2322 151 52151	Resistor, 215 ohm - 1% - 125mW	1
47E	2322 151 56811	Resistor, 681 ohm - 1% - 125mW	1
48E	2322 151 58251	Resistor, 825 ohm - 1% - 125mW	1
49E	2322 151 51002	Resistor, 1K - 1% - 125mW	7
50E	2322 151 51472	Resistor, 1K47 - 1% - 125mW	2
51E	2322 151 51782	Resistor, 1K78 - 1% - 125mW	4
52E	2322 151 52612	Resistor, 2K61 - 1% - 125mW	2
53E	2322 151 53832	Resistor, 3K83 - 1% - 125mW	1
54E	2322 151 54642	Resistor, 4K64 - 1% - 125mW	1
55E	2322 151 55622	Resistor, 5K62 - 1% - 125mW	1
56E	2322 151 51782	Resistor, A.R., 1K78 - 1% - 125mW	1
57E	2322 151 52152	Resistor, A.R., 2K15 - 1% - 125mW	1
58E	2322 151 52612	Resistor, A.R., 2K61 - 1% - 125mW	1
59E	2322 151 53162	Resistor, A.R., 3K16 - 1% - 125mW	1

PCBA, D-A-CONVERTER

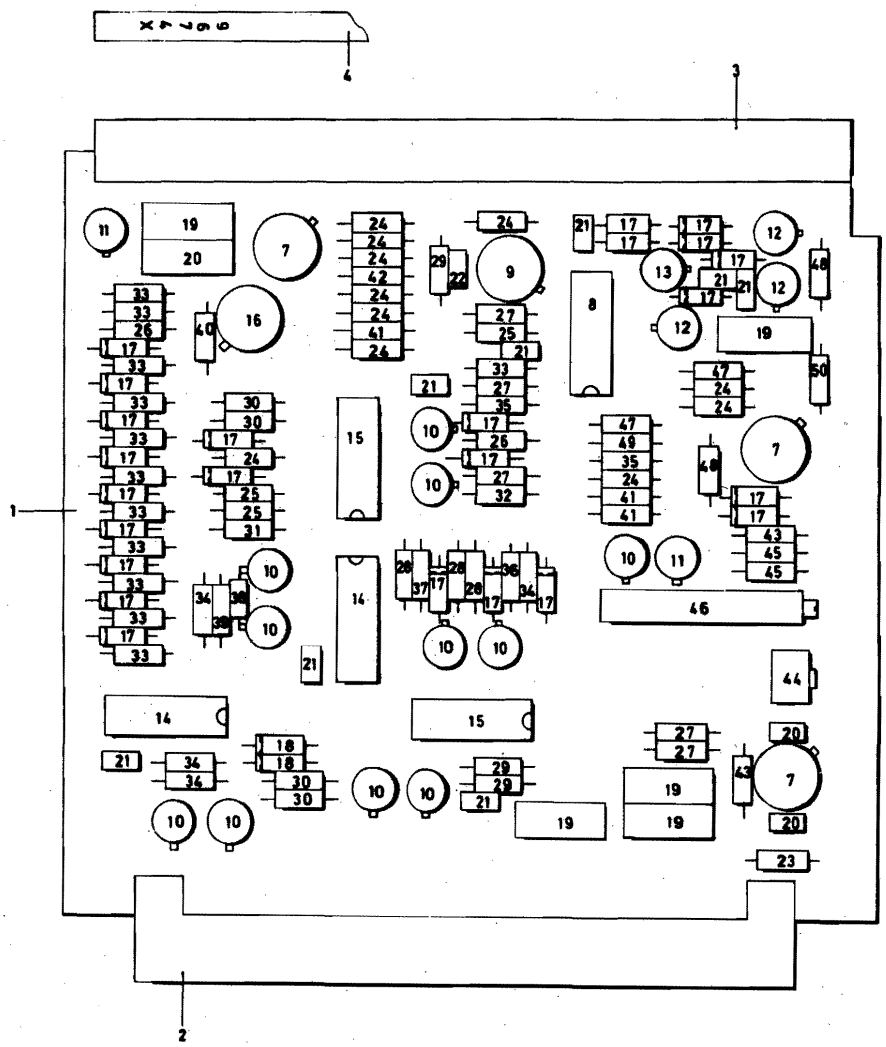



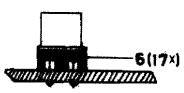

Item nr	Part number	Description	Qty. per ass'y
A	5122 299 13700	Final assembly	1
B	5122 289 96740	PCBA, Digital-Analog-Converter	1
1C	5122 200 36821	Board	1
2C	2422 025 89116	Connector, 64-pole, FO54	1
3C	4022 191 06080	Front-strip	1
4C	5122 200 44450	Text-strip	1
5C	3522 103 77401	Base, capacitor	11
6C	9390 155 30715	Foot, transistor, T018	17
7C	9331 370 00112	Integrated circuit, TBA221	3
8C	9380 000 60000	Integrated circuit, SN7404N	1
9C	9331 353 50112	Integrated circuit, TBA281	1
10C	9330 116 50112	Transistor, BCY56	11
11C	9330 441 20112	Transistor, BCY72	2
12C	9330 441 00112	Transistor, BCY70	3
13C	9331 331 70112	Transistor, BSV79	1
14C	9380 000 00000	Integrated circuit, SN7400N	2
15C	9380 000 10000	Integrated circuit, SN7401N	2
16C	9331 370 00112	Integrated circuit, TBA221	1
17C	9330 228 60112	Diode, BAX13	24
18C	9331 178 40112	Diode, BZX79 - C16	2
19C	2222 344 90101	Capacitor, MPR, 0,1 uF, 10% 100V	6
20C	2222 630 01152	Capacitor, CER, 1500pF, 10% 100V	2
21C	2222 629 02103	Capacitor, CER, 10.000pF, -20/100% 40V	8
22C	2222 631 58101	Capacitor, CER, 100pF, 2% 100V	1
23C	2222 143 15338	Capacitor, Tantalum, 3,3 uF, 20% 15V	1
24C	2322 151 54642	Resistor, 4K64, 1%, 125mW	10
25C	2322 151 56812	Resistor, 6K81, 1%, 125mW	3
26C	2322 151 51003	Resistor, 10K, 1%, 125mW	2
27C	2322 151 51213	Resistor, 12K1, 1%, 125mW	4
28C	2322 151 51473	Resistor, 14K7, 1%, 125mW	3
29C	2322 151 55622	Resistor, 5K62, 1%, 125mW	3
30C	2322 151 51782	Resistor, 1K78, 1%, 125mW	4
31C	2322 151 53161	Resistor, 316 ohm, 1%, 125mW	1
32C	2322 151 52152	Resistor, 2K15, 1%, 125mW	1
33C	2322 151 52612	Resistor, 2K62, 1%, 125mW	11
34C	2322 151 58251	Resistor, 825 ohm, 1%, 125mW	4
35C	2322 151 52613	Resistor, 26K1, 1%, 125mW	2
36C	2322 151 55623	Resistor, 56K2, 1%, 125mW	1
37C	2322 151 51004	Resistor, 100K, 1%, 125mW	1
38C	2322 151 51471	Resistor, 147 ohm, 1%, 125mW	1
39C	2322 151 51472	Resistor, 1K47, 1%, 125mW	1
40C	2322 151 52151	Resistor, 215 ohm, 1%, 125mW	1
41C	2322 151 53832	Resistor, 3K83, 1%, 125mW	3
42C	2322 151 51472	Resistor, 1K47, 1%, 125mW	1
43C	2322 151 51783	Resistor, 17K8, 1%, 125mW	2
44C	2113 375 00006	Potentiometer, 10K, 500mW	1
45C	2322 151 51009	Resistor, 10 ohm, 1%, 125mW	2
46C	2122 350 00035	Potentiometer, 1K, 1W	1
47C	2322 151 54643	Resistor, 46K4, 1% 125mW	2

PCBA, D-A-CONVERTER

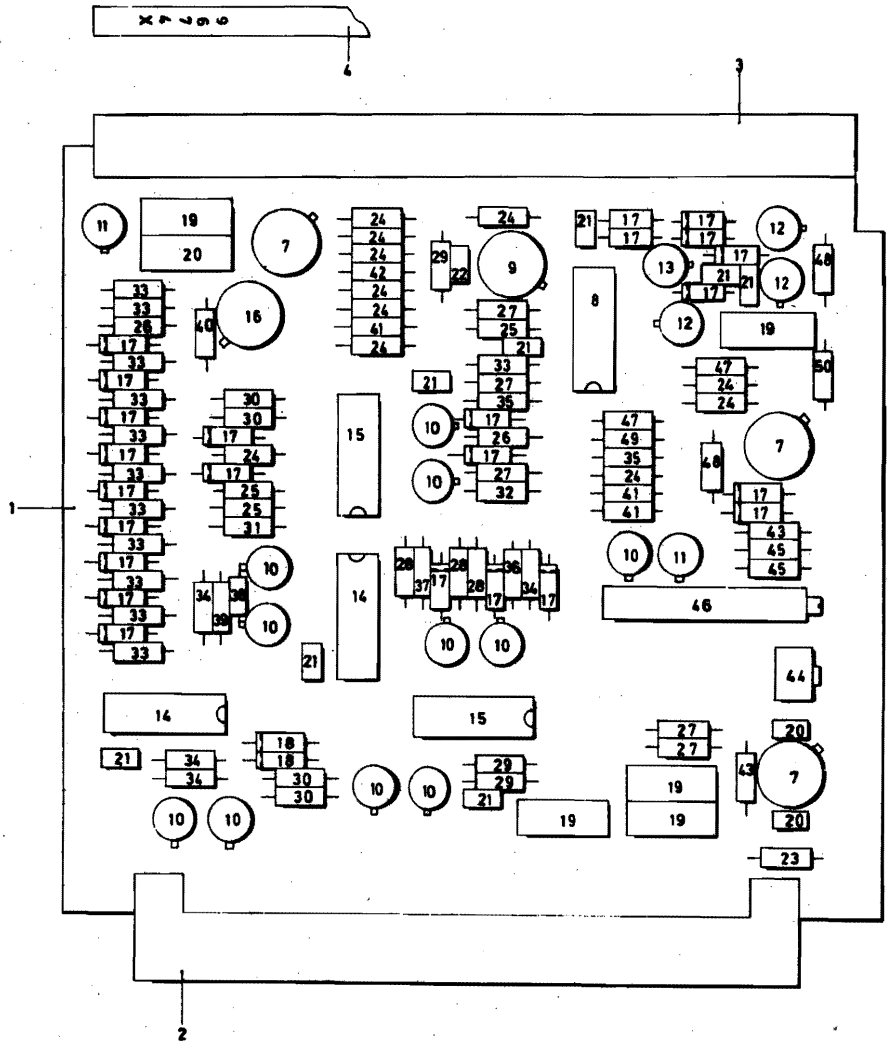





Item nr	Part number	Description	Qty. per ass'y
48C	2322 151 51212	Resistor, 1K21, 1%, 125mW	2
49C	2322 151 51002	Resistor, 1K, 1%, 125mW	1
50C	2322 151 51001	Resistor, 100 ohm, 1%, 125mW	50

PCBA WRITE CIRCUITS - 1A24

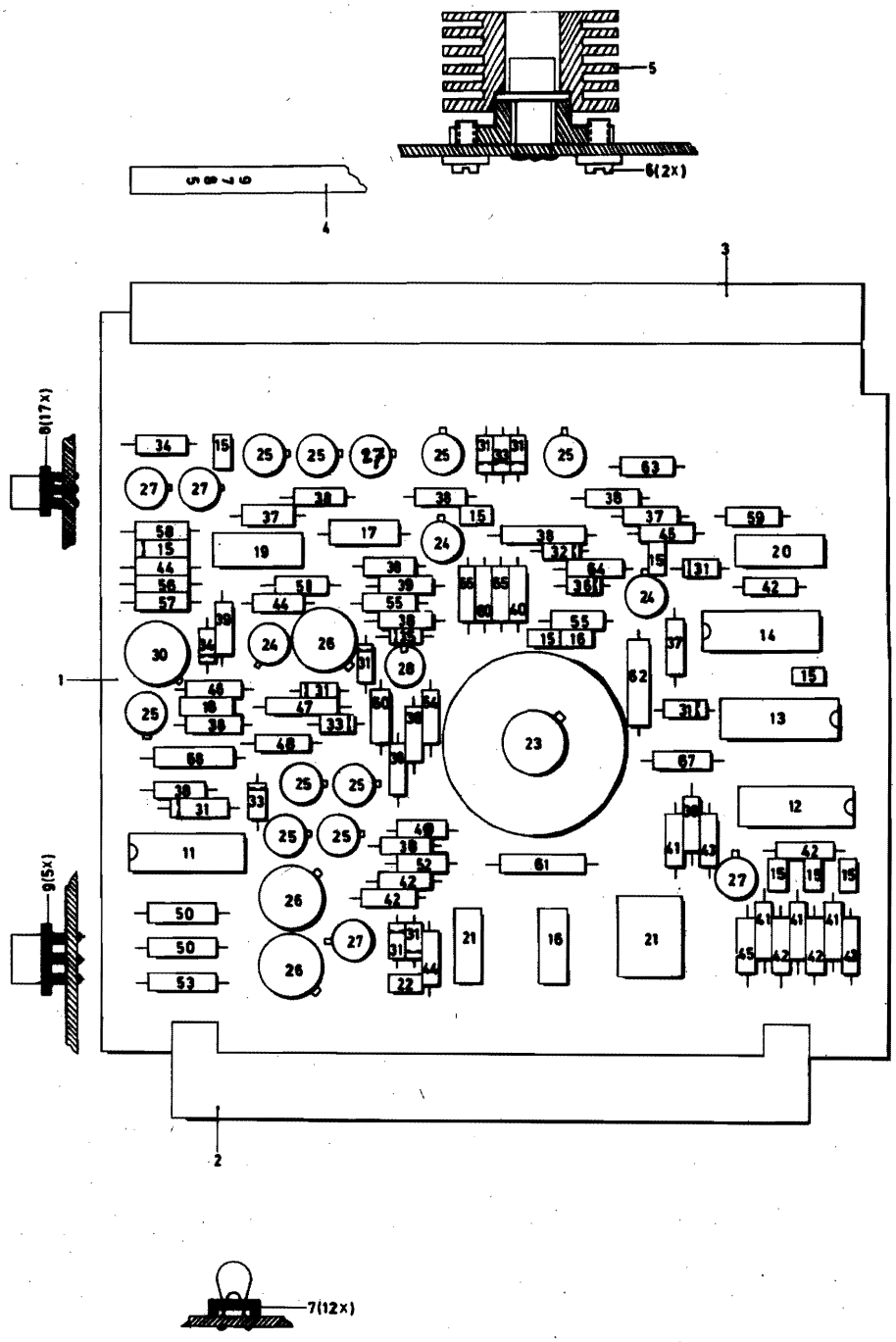

Item nr	Part number	Description	Qty. per ass'y
A	5122 299 13700	Final assembly	1
B	5122 289 97850	PCBA, write circuits - 1A24	1
1C	5122 200 10590	Board, 2074	1
2C	2422 025 89116	Connector, 64-pole, F054	1
3C	4022 191 06080	Front-strip	1
4C	5122 200 44410	Text-strip	1
5C	2411 499 02017	Heat sink, CO 180 A	1
6C	2522 601 08776	Screw, M2,5x4, Cyl., Ms.Ni.UN-B054	2
7C	3522 103 77401	Base, capacitor	12
8C	9390 155 30112	Foot, transistor, TO18	17
9C	9390 620 70682	Foot, transistor, TO5	5
10C	2422 034 10892	Pin, locking	1
11C	9380 003 20000	Integrated circuit, SN7474N	1
12C	9380 004 00000	Integrated circuit, SN7486N	1
13C	9380 002 70000	Integrated circuit, SN7454N	1
14C	9380 011 20000	Integrated circuit, SN74122N	1
15C	2222 629 01103	Capacitor, CER, 10nF, -20/100% 40V	9
16C	2222 631 58101	Capacitor, CER, 100pF, 2% 100V	1
16C-A	2222 344 21224	Capacitor, MPR, 220nF, 10% 100V	1
17C	2222 143 16159	Capacitor, Electrolyte, 15 uF, 20%, 20V	1
18C	2222 629 03223	Capacitor, CER, 22nF, -20/100% 40V	1
19C	2222 344 41153	Capacitor, MPR, 15nF, 10% 250V	1
20C	2222 344 41223	Capacitor, MPR, 22nF, 10% 250V	1
21C	2222 344 90101	Capacitor, MPR, 100nF, 10% 100V	3
22C	2222 630 01122	Capacitor, CER, 1,2nF, 10% 100V	1
23C	9330 978 00112	Transistor, BSW 66	1
24C	9330 116 50112	Transistor, BCY 56	2
25C	9330 219 20112	Transistor, BSX 20	10
26C	9330 328 60112	Transistor, 2N2904A	1
26C-A	9330 283 60112	Transistor, BSX 61	2
27C	9330 441 00112	Transistor, BCY 70	3
28C	9330 441 20112	Transistor, BCY 72	1
29C	9330 390 80682	Transistor, BSX 29	1
30C	9330 328 60112	Transistor, 2N2904A	1
31C	9331 012 20112	Diode, BAW 62	9
32C	9331 177 20112	Diode, BZX 79 - C5V1	1
33C	9331 177 10112	Diode, BZX 79 - C4V7	3
34C	9331 185 60112	Diode, BAV 10	1
35C	9331 177 90112	Diode, BZX 79 - C10V	1
36C	9331 042 10112	Diode, AAZ 18	1
37C	2322 151 58251	Resistor, 1825 ohm, 1% 125mW	3
38C	2322 151 51002	Resistor, 1K, 1%, 125mW	12
39C	2322 151 52612	Resistor, 2K61, 1%, 125mW	2
40C	2322 151 56812	Resistor, 6K81, 1%, 125mW	1
41C	2322 151 54649	Resistor, 46,4 ohm, 1%, 125mW	4
42C	2322 151 51003	Resistor, 10K, 1%, 125mW	7
43C	2322 151 54641	Resistor, 464 ohm, 1%, 125mW	1
44C	2322 151 55622	Resistor, 5K62, 1%, 125mW	3
45C	2322 151 52152	Resistor, 2K15, 1%, 125mW	2

PCBA, WRITE CIRCUITS - 1A24

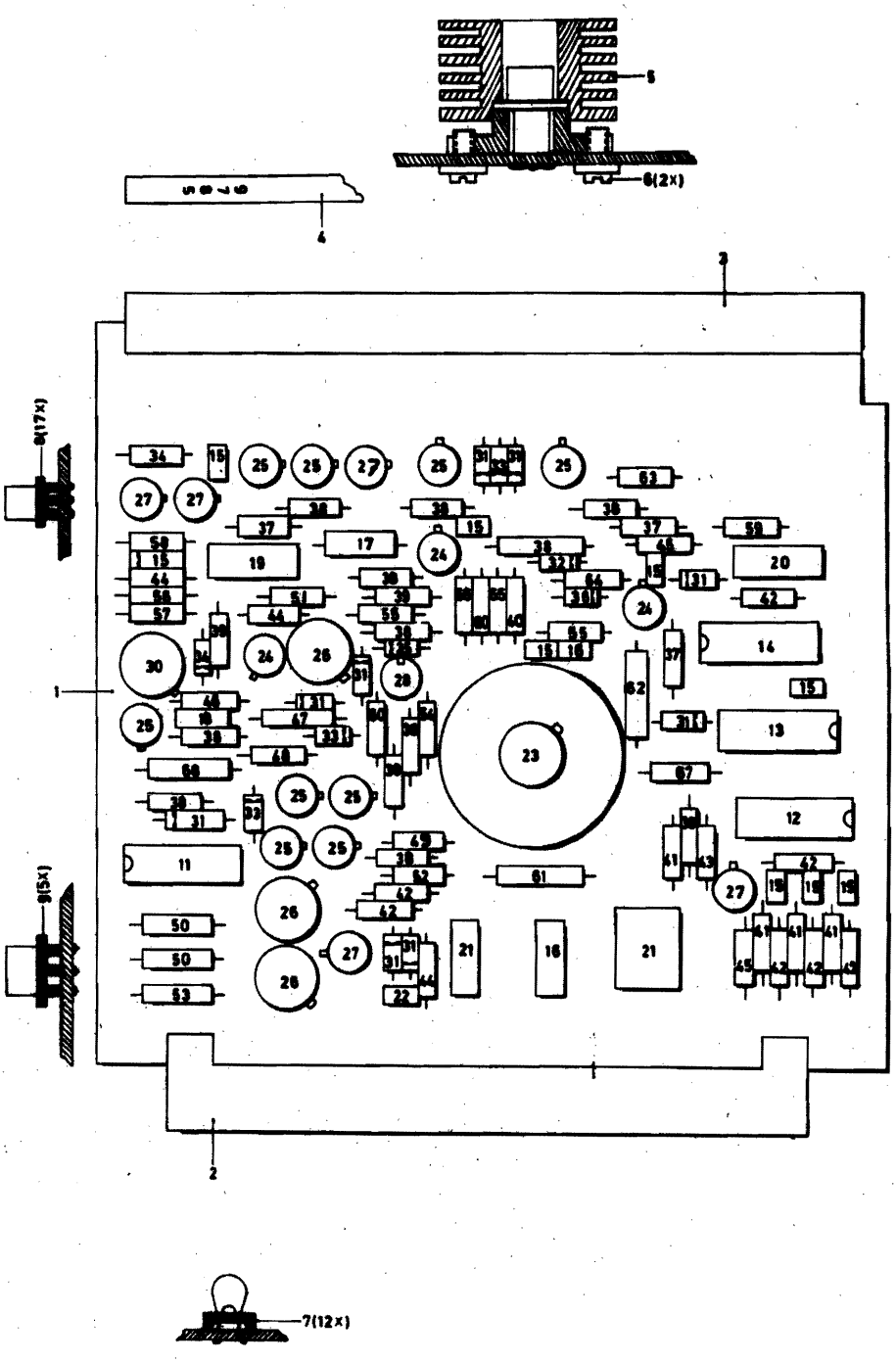

Item nr	Part number	Description	Qty. per ass'y
46C	2322 151 53482	Resistor, 3K48, 1%, 125mW	1
47C	2322 152 51961	Resistor, 196 ohm, 1% 250mW	1
48C	2322 151 53831	Resistor, 383 ohm, 1%, 125mW	1
49C	2322 151 54221	Resistor, 422 ohm, 1%, 125mW	1
50C	2322 152 51472	Resistor, 1K47, 1%, 250mW	2
51C	2322 151 56819	Resistor, 68,1 ohm, 1%, 125mW	1
52C	2322 151 55621	Resistor, 562 ohm, 1%, 125mW	1
53C	2322 152 58259	Resistor, 82,5 ohm, 1%, 250mW	1
54C	2322 151 52372	Resistor, 2K37, 1%, 125mW	1
55C	2322 151 56811	Resistor, 681 ohm, 1%, 125mW	2
56C	2322 151 54643	Resistor, 46K4, 1%, 125mW	1
57C	2322 151 53162	Resistor, 3K16, 1%, 125mW	1
58C	2322 151 55629	Resistor, 56,2 ohm, 1%, 125mW	1
59C	2322 151 58251	Resistor, 825 ohm, 1%, 125mW	1
60C	2322 151 58252	Resistor, 8K25, 1%, 125mW	2
61C	2322 152 55621	Resistor, 562 ohm, 1%, 250mW	1
62C	2322 152 53831	Resistor, 383 ohm, 1%, 250mW	1
63C	2322 151 54871	Resistor, 487 ohm, 1%, 125mW	1
64C	2322 151 52152	Resistor, 2K15, 1%, 125mW	1
65C	2322 151 52153	Resistor, 21K5, 1%, 125mW	1
66C	2322 151 51003	Resistor, 10K, 1%, 125mW	1
67C	2322 151 51782	Resistor, 1K78, 1%, 125mW	1
68C	2322 152 53161	Resistor, 316 ohm, 1%, 250mW	1

PCBA, DRIVER

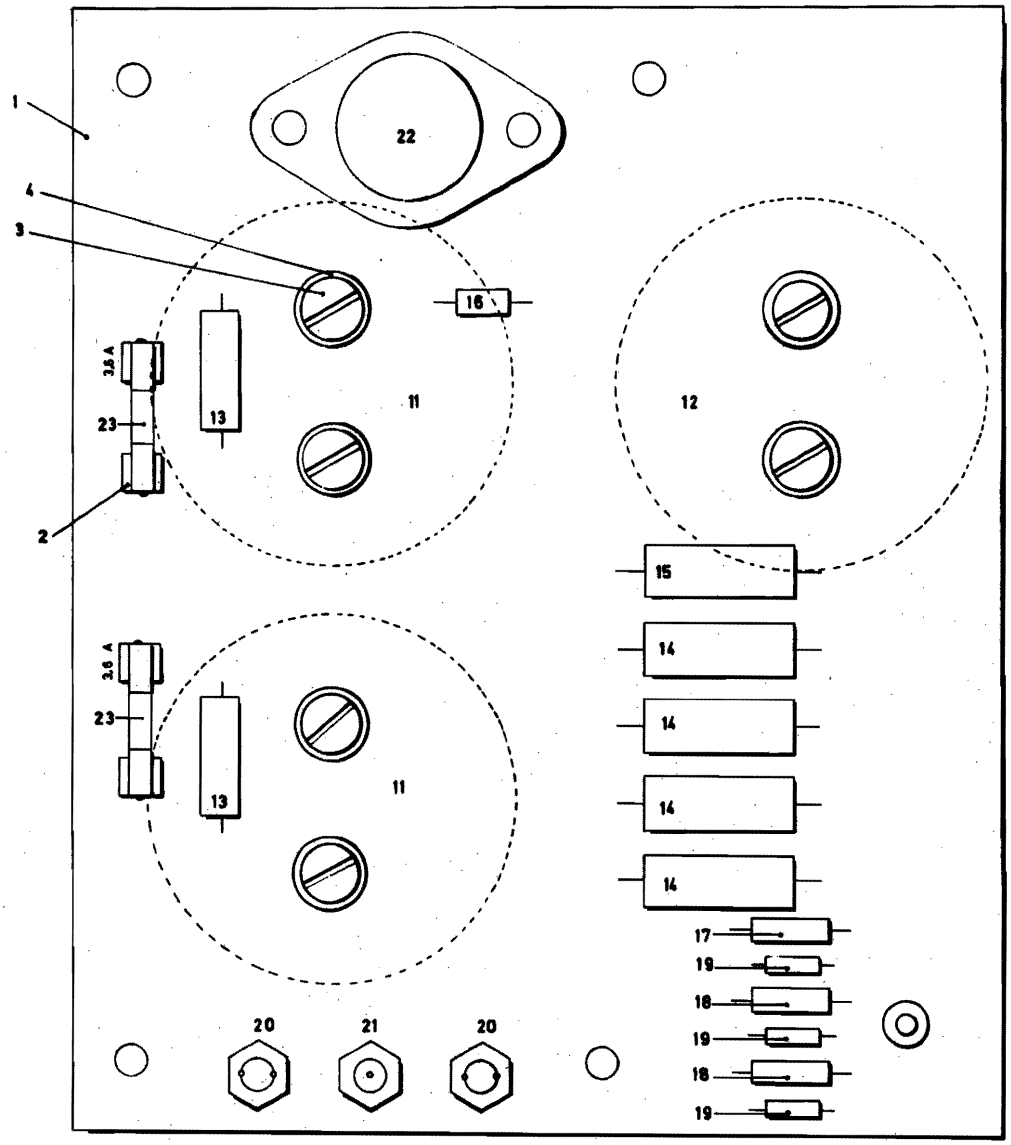
1
4
3
22
16
3.5 A
23
2
13
11
12
15
14
14
14
14
17
19
18
19
18
19
3.5 A
23
13
11
20
21
20

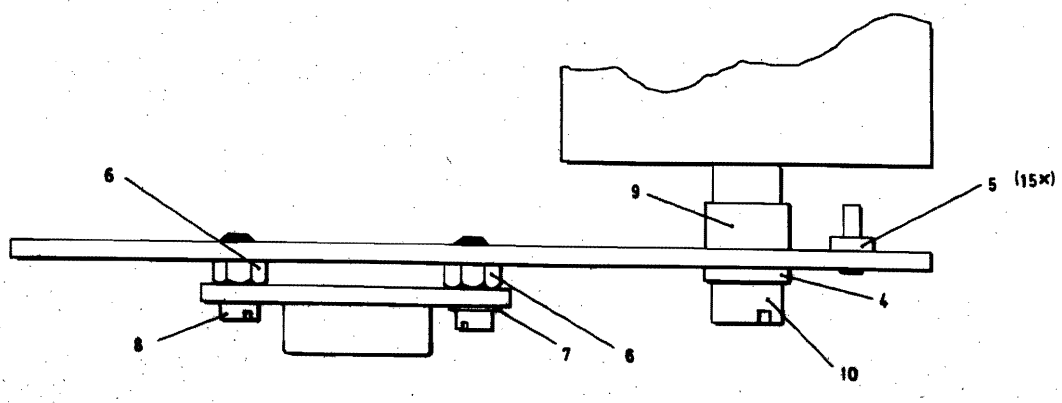
6
9
5 (15×)
4
8
7
6
10

Item nr	Part number	Description	Qty. per ass'y
C	5122 289 97520	Frame assy	1
D	5122 289 96480	PCBA, driver	1
1E	5122 200 36450	Board, driver	1
2E	2412 088 00032	Fuse-holder	4
3E	2522 004 02054	Screw, M5x10, cyl., NLN-B103	4
4E	2522 608 02003	Washer, Earth, NLN-B044	6
5E	2413 015 00323	Pin, connecting	15
6E	2522 424 02015	Nut, insert, M3x2,8, HEX., NLN-B024AX	2
7E	2522 608 02001	Washer, earth, 3,2x6, St.Cu.Ni.,NLN-B044	1
8E	2522 004 02024	Screw, M3x6, cyl., NLN-B103	2
9E	5122 200 39020	Washer	2
10E	2522 004 02056	Screw, M5x15, cyl., NLN-B103	2
11E	2222 106 17153	Capacitor, 15000 uF -40V	2
12E	2222 106 15223	Capacitor, 22000 uF -16V	1
13E	2322 325 37152	Resistor, 1K5, 4W, 5%	2
14E	2322 326 51337	Resistor, 0,33 ohm, 2W, 10%	4
15E	2322 325 37279	Resistor, 27 ohm, 4W, 5%	1
16E	2322 151 51001	Resistor, 100 ohm, 125mW, 1%	1
17E	2322 152 53161	Resistor, 316 ohm, 250mW, 1%	1
18E	2322 152 51212	Resistor, 1K21, 250mW, 1%	2
19E	9330 548 70112	Diode, BYX36 - 300R	3
20E	9330 071 70112	Thyristor, BTY79 - 400R	2
21E	9330 096 90112	Diode, BZZ16	1
22E	9330 226 60112	Transistor, 2N3442	1
23E	2422 086 00053	Fuse, 6,3A - 250V	2

CONNECTING CABLE

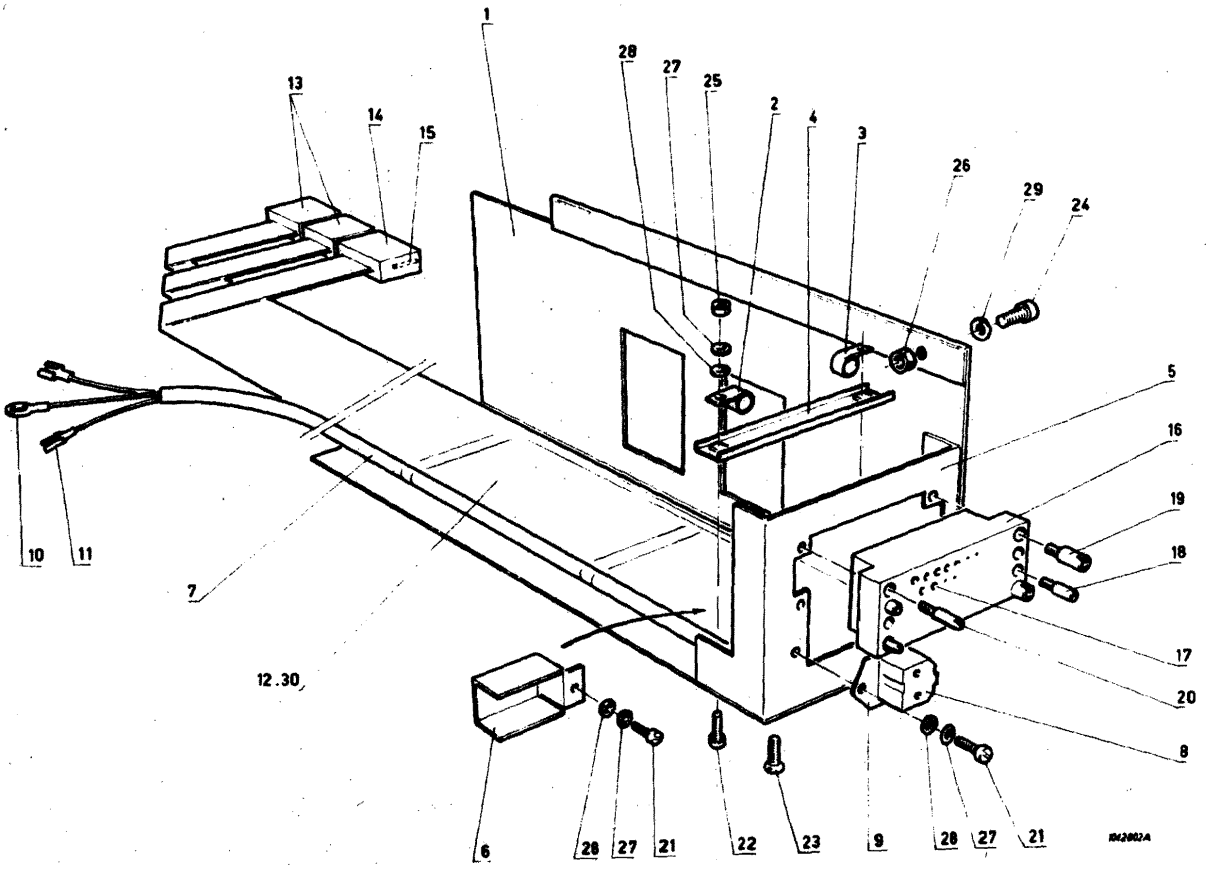

Item nr	Part number	Description	Qty. per ass'y
A	5122 299 13700	Final assembly	1
B	5122 289 98000	Connecting cable	1
1C	5122 200 38440	Plate	1
2C	2413 015 00137	Cable clamp 4,8	2
3C	2413 015 00141	Cable clamp 6,4	2
4C	5122 289 97450	Clamping piece	1
5C	5122 289 97470	Plate	1
6C	5122 289 98740	Screening cap	1
7C	5122 289 97980	Power cable	1
8D	2422 025 01231	Connector, 3 pins	1
9D	2422 032 00856	Bracket	1
10D	2422 015 02156	Eye cable tag	1
11D	2422 015 02862	Slide contact	2
12C	5122 289 97990	Interface cable, assy	1
13D	2422 034 10794	Connector, 20 pins	2
14D	2422 034 10793	Connector, 26 pins	1
15D	2422 034 10788	Socket connector	66
16D	2422 032 00199	Connecting block	1
17D	2422 034 00087	Socket connector	66
18D	2422 032 00176	Locking screw	2
19C	2422 032 00183	Bush	2
20C	2422 034 10064	Pin	2
21C	2522 004 02024	Screw, M3x6	3
22C	2522 004 02027	Screw, M3x12	2
23C	2522 018 01025	Countersunk, screw M3x8	2
24B	2522 004 02042	Screw, M4x12	2
25C	2522 401 60008	Nut, M3	4
26B	2522 401 60011	Nut, M4	2
27C	2522 600 16017	Washer, M3	7
28C	2522 613 01005	Spring ring	6
29B	2522 613 03009	Spring ring	2
30D	5122 021 70021	Cable, tape, 48 pole	1

Cartridge Disk Drive Unit
Vol. IX: Wiring List



Data Systems

Figure 9-1 Interconnection

AB pin	To	Signal
1	Driver print-4	
2	Driver print 2	
3	Rack 0V.	
4	Rack +5V.	
5	TS6-E	
6	TS6-B	
7	TS6-C	

AB/AM	To	Signal
2	CA-1	
3	AS-4	
4	AS-2	

AB/CL	To	Signal
1	AS-7	
2	RL3-5	

AS pin	To	Signal
1	TR1-12	
1	Running time meter	
1	AS-2	
2	RL1-14	
2	AB/AM-4	
2	AS-1	
3	TR1-2	
3	Lock Magnet	
3	RL1-11	
3	AS-4	
4	AB/AM-3	
4	Running time meter	
4	AS-3	
5	RL1-13	
5	RL3-7	
5	Lock Magnet	
5	AS-6	
6	TR1-12	220V AC.
6	AS-5	
7	RL1-10	
7	AB/CL-1	
7	AS-8	
8	TR1-4	
8	AS-7	

CA	To	Signal
1	AB/AM-2	
2	Running time meter	

CM pin	To	Signal
1	P4-7	NSD*
6	P4-9	NCD*
7	P4-3	-12V
7	 CM-H	
8	P4-4	+12V
8	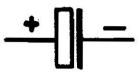 CM-J	
10	Primary meander-2	NPMC
A	P4-8	PSD*
F	P4-10	PCD*
H	 CM-7	
J	P4-12	Ground
J	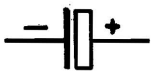 CM-8	
K	Earth screw	Ground
L	Primary meander-1	PPMC

FL1	To	Signal
⏚	Mains Connector ⏚	Earth
2	Mains Connector-1	220V AC.
4	Mains Connector-2	220V AC. Return

F7	To	Signal
2	TR1-1	

JC pin	To	Signal
1	LM-1	$\overline{CL}$*
2	LM-2	+24V
3	SW1-NO	$\overline{RTO}$*
4	SW1-NC	RTOG*



JF pin	To	Signal
1	S1-1	$\overline{\text{SBU}}$*
2	S1-2	SBUG*
3	S1-3	$\overline{\text{SBD}}$*
4	S1-4	SBDG*
5		
6		
7	S2-1	$\overline{\text{WPBU}}$*
8	S2-2	WPBUR*
9	S2-3	$\overline{\text{WPBD}}$*
10	S2-4	WPBDG*
11	L1-A	$\overline{\text{START}}$*
12	L1-B	+12V
13	L5-A	$\overline{\text{UNS}}$*
14	L5-B	+12V
15	L4-A	$\overline{\text{EXC}}$*
16	L4-B	+12V
17	L3-A	$\overline{\text{URI}}$*
18	L3-B	+12V
19	L2-A	WPI*
20	L2-B	+12V

JI pin	To	Signal
2		
3	Index Unit 0	Ground
4	Index Unit +5V	+5V
5	Index Unit 0	OPZR*
6	Index Unit Out	OPZ*
7	Index Unit -6V	-6V
8	Index Unit +12V	+12V
10		

JS pin	To	Signal
1	RL2-1	PMD*
2	RL1-7	+24V
3	RL3-1	CME*
4	RL3-4	+24V
5	RL1-1	PME*
6	RL2-7	+24V

LM	To	Signal
1	JC-1	$\overline{CL}$*
2	JC-2	+24V

L1	To	Signal
a	JF-11	$\overline{START}$*
b	JF-12	+12V

L2	To	Signal
a	JF-19	WPI *
b	JF-20	+12V

L3	To	Signal
a	JF-17	$\overline{\text{URI}}$ *
b	JF-18	+12V

L4	To	Signal
a	JF-15	$\overline{\text{EXC}}$ *
b	JF-16	+12V

L5	To	Signal
a	JF-13	$\overline{\text{UNS}}$ *
b	JF-14	+12V

PA pin	To	Signal
1	P8-1	RD1*
2	P8-2	Ground
3	P8-3	RD2*
4	P8-4	Ground
5		
6		
7	P8-7	RC*
8	P8-8	Ground
9	P8-9	+12V
10	P8-10	-12V
11	P8-11	$\overline{\text{UHC}}$*
12	P8-12	$\overline{\text{UHF}}$*
13	P8-13	$\overline{\text{LHC}}$*
14	P8-14	$\overline{\text{LHF}}$*
15	P8-15	PLSL*
16	P8-16	ERC*
17	P8-17	WRC1*
18	P8-18	WRC2*
19	P8-19	+5V
20	P8-20	Ground

PB pin	To	Signal
1	P3-7	IC1*
2	P3-8	IC2*

PC pin	To	Signal
1	P3-1	$\overline{\text{CL}}$*
2	P3-2	+24V
3	P3-3	RTO*
4	P3-4	RTOG*
5		
6		

PD pin	To	Signal
1	P3-11	$\overline{\text{BIRA}}$*
2	P3-12	$\overline{\text{BIRG}}$*
3	P3-13	$\overline{\text{BIRN}}$*
4	P3-14	$\overline{\text{BIRG}}$*
5		
6		

PE pin	To	Signal
1	P3-9	IF1*
2	P3-10	IF2*

PF pin	To	Signal
1	P2-1	$\overline{\text{SBU}}$*
2	P2-2	SBUG*
3	P2-3	$\overline{\text{SBD}}$*
4	P2-4	SBDG*
5		
6		
7	P2-7	$\overline{\text{WPBU}}$*
8	P2-8	WPBUG*
9	P2-9	$\overline{\text{WPBD}}$*
10	P2-10	WPBDG*
11	P2-11	$\overline{\text{START}}$*
12	P2-12	+12V
13	P2-13	$\overline{\text{UNS}}$*
14	P2-14	+12V
15	P2-15	$\overline{\text{EXC}}$*
16	P2-16	+12V
17	P2-17	$\overline{\text{DRI}}$*
18	P2-18	+12V
19	P2-19	$\overline{\text{WPI}}$*
20	P2-20	+12V

PI pin	To	Signal
1	P7-15	$\overline{\text{RDDA}}$*
2	P7-3	$\overline{\text{UR}}$*
3	P7-1	$\overline{\text{USA2}}$*(USA)
4	P7-16	Ground
5	P7-4	Ground
7	P7-2	Ground
8	P7-19	$\overline{\text{WRDA}}$*
10	P7-7	$\overline{\text{CS}}$*
11	P7-5	$\overline{\text{HS}}$*
12	P7-20	Ground
13	P7-8	Ground
14	P7-6	Ground
15	P7-13	Res
16	P7-11	$\overline{\text{USA3}}$* (option)
17	P7-9	$\overline{\text{CTS}}$*
18	P7-14	Ground
20	P7-12	Ground
21	P7-10	Ground
22	P7-17	Res
23	P6-3	$\overline{\text{SPC}}$*
24	P6-1	$\overline{\text{IPC}}$*
25	P7-18	Ground
26	P6-4	Ground
27	P6-2	Ground
28	P6-9	$\overline{\text{AT}}$*
29	P6-7	$\overline{\text{CON}}$*
30	P6-5	$\overline{\text{SPF}}$*

PI pin	To	Signal
31	P6-10	Ground
32	P6-8	Ground
33	P6-6	Ground
34	P6-15	$\overline{\text{USA1}}$* (RERR)
35	P6-13	$\overline{\text{IPF}}$*
36	P6-11	$\overline{\text{USL}}$*
37	P6-16	Ground
38	P6-14	Ground
39	P6-12	Ground
40	P5-1	($\overline{\text{AB0}}$*)
41	P6-19	+5V
42	P6-17	+5V
43	P5-2	Ground
44	P6-20	Ground
45	P6-18	Ground
46	P5-7	$\overline{\text{AB2}}$*($\overline{\text{AB3}}$*)
47	P5-5	$\overline{\text{AB1}}$*($\overline{\text{AB2}}$*)
48	P5-3	$\overline{\text{AB0}}$*($\overline{\text{AB1}}$*)
49	P5-8	Ground
50	P5-6	Ground
51	P5-4	Ground
52	P5-13	$\overline{\text{AB5}}$*($\overline{\text{AB6}}$*)
53	P5-11	$\overline{\text{AB4}}$*($\overline{\text{AB5}}$*)
54	P5-9	$\overline{\text{AB3}}$*($\overline{\text{AB4}}$*)
55	P5-14	Ground
56	P5-12	Ground
57	P5-10	Ground

PI pin	To	Signal
58	P5-19	$\overline{\text{SUS}}$
59	P5-17	$\overline{\text{AB7}}$*($\overline{\text{AB8}}$*)
60	P5-15	$\overline{\text{AB6}}$*($\overline{\text{AB7}}$*)
62	P5-20	Ground
63	P5-18	Ground
64	P5-16	Ground
65	P5-23	Res
66	P5-21	Res
70	P5-24	Ground
71	P5-22	Ground
73	P5-25	Res
76	P5-26	Ground

PN pin	To	Signal
1	P3-15	$\overline{\text{DWSA}}$*
2	P3-16	DWSAG*
3	P3-17	$\overline{\text{DWSN}}$*
4	P3-18	DWSNG*
5	P3-19	Spare
6	P3-20	Spare

PS pin	To	Signal
1	P1-1	$\overline{\text{PMD}}$*
2	P1-2	+24V
3	P1-3	$\overline{\text{CME}}$*
4	P1-4	+24V
5	P1-7	$\overline{\text{PME}}$*
6	P1-8	+24V

PV pin	To	Signal
1	TS8-B	
2	TR1-3	
3	TS8-C	
4	TR1-4	
5	TS8-E	
6	Rack +12V	+12V
7	TS7-B	
8	TS7-E	
9	TS7-C	+24V
10	Rack +24V	
11	TR1-9	
12	TR1-10	
13	TS9-B	
14	TS9-E	
15	TS9-C	
16	Rack -12V	-12V
17	TR1-13	
18	TR1-14	
19	TR1-7	
20	TR1-8	

PZ pin	To	Signal
1		
3	P4-20	Ground
4	P4-19	+5V
5	P4-18	OPZR*
6	P4-17	OPZ*
7	P4-16	-6V
8	P4-15	+12V
9		

P1 pin	To	Signal
1	PS-1	$\overline{\text{PMD}}$*
2	PS-2	+24V
3	PS-3	$\overline{\text{CME}}$*
4	PS-4	+24V
5		
6		
7	PS-5	$\overline{\text{PME}}$*
8	PS-6	+24V
9	TR1-11	Ground
10	TR1-11	Ground
11	Dvr. Print-8	-35V
12	Dvr. Print-5	+35V
13	TR1-12	25V eff.
14	TR1-11	25V eff. ground.
15	Dvr. Print-15	DEB*
16	Dvr. Print-3	DEBR*
17	Dvr. Print-14	VPC*
18	Dvr. Print-10	CP*
19	TS1-B	DNC*
20	TS3-B	DPC*

P2 pin	To	Signal
1	PF-1	$\overline{\text{SBU}}$*
2	PF-2	SBUG*
3	PF-3	$\overline{\text{SBD}}$*
4	PF-4	SBDG*
5	PF-5	
6	PF-6	
7	PF-7	$\overline{\text{WPBU}}$*
8	PF-8	WPBUG*
9	PF-9	$\overline{\text{WPBD}}$*
10	PF-10	WPBDG*
11	PF-11	$\overline{\text{START}}$*
12	PF-12	+12V
13	PF-13	$\overline{\text{UNS}}$*
14	PF-14	+12V
15	PF-15	$\overline{\text{EXC}}$*
16	PF-16	+12V
17	PF-17	$\overline{\text{DRI}}$*
18	PF-18	+12V
19	PF-19	$\overline{\text{WPI}}$*
20	PF-20	+12V

P3 pin	To	Signal
1	PC-1	$\overline{\text{CL}}$*
2	PC-2	+24V
3	PC-3	RTO*
4	PC-4	RTOG*
5	PC-5	
6	PC-6	
7	PB-1	IC1*
8	PB-2	IC2*
9	PE-1	IF1*
10	PE-2	IF2*
11	PD-1	$\overline{\text{BIRA}}$*
12	PD-2	$\overline{\text{BIRG}}$*
13	PD-3	$\overline{\text{BIRN}}$*
14	PD-4	$\overline{\text{BIRG}}$*
15	PN-1	$\overline{\text{DWSA}}$*
16	PN-2	DWSAG*
17	PN-3	$\overline{\text{DWSN}}$*
18	PN-4	DWSNG*
19	PN-5	
20	PN-6	

P4 pin	To		Signal
1	SO-2		PSTD*
2	SO-1		NSTD*
3	CM-7	CM-H	-12V
4	CM-8	CM-J	+12V
5			
6			
7	CM-1		NSD*
8	CM-A		PSD*
9	CM-6		NCD*
10	CM-F		PCD*
11	SW5-NO		$\overline{\text{RETA}}$*
12	CM-J		Ground
13	SW5-NC		$\overline{\text{RETN}}$*
14	SW5-C		Ground
15	PZ-8		+12V
16	PZ-7		-6V
17	PZ-6		OPZ*
18	PZ-5		OPZR*
19	PZ-4		+5V
20	PZ-3		Ground

P5 pin	To	Signal
1	PI-40	($\overline{ABO}$*)
2	PI-43	Ground
3	PI-48	$\overline{ABO}$* ($\overline{AB1}$*)
4	PI-51	Ground
5	PI-47	$\overline{AB1}$* ($\overline{AB2}$*)
6	PI-50	Ground
7	PI-46	$\overline{AB2}$* ($\overline{AB3}$*)
8	PI-49	Ground
9	PI-54	$\overline{AB3}$* ($\overline{AB4}$*)
10	PI-57	Ground
11	PI-53	$\overline{AB4}$* ($\overline{AB5}$*)
12	PI-56	Ground
13	PI-52	$\overline{AB5}$* ($\overline{AB6}$*)
14	PI-55	Ground
15	PI-60	$\overline{AB6}$* ($\overline{AB7}$*)
16	PI-64	Ground
17	PI-59	$\overline{AB7}$* ($\overline{AB8}$*)
18	PI-63	Ground
19	PI-58	$\overline{SUS}$*
20	PI-62	Ground
21	PI-66	RES
22	PI-71	Ground
23	PI-65	RES
24	PI-70	Ground
25	PI-73	RES
26	PI-76	Ground

P6 pin	To	Signal
1	PI-24	$\overline{\text{IPC}}$*
2	PI-27	Ground
3	PI-23	$\overline{\text{SPC}}$*
4	PI-26	Ground
5	PI-30	$\overline{\text{SPF}}$*
6	PI-33	Ground
7	PI-29	$\overline{\text{CON}}$*
8	PI-32	Ground
9	PI-28	$\overline{\text{AT}}$*
10	PI-31	Ground
11	PI-36	$\overline{\text{USL}}$*
12	PI-39	Ground
13	PI-35	$\overline{\text{IPF}}$*
14	PI-38	Ground
15	PI-34	$\overline{\text{USA1}}$*(RERR)
16	PI-37	Ground
17	PI-42	+5V
18	PI-45	Ground
19	PI-41	+5V
20	PI-44	Ground

P7 pin	To	Signal
1	PI-3	$\overline{\text{USA2}}$* (USA)
2	PI-7	Ground
3	PI-2	$\overline{\text{UR}}$*
4	PI-5	Ground
5	PI-11	$\overline{\text{HS}}$*
6	PI-14	Ground
7	PI-10	$\overline{\text{CS}}$*
8	PI-13	Ground
9	PI-17	$\overline{\text{CTS}}$*
10	PI-21	Ground
11	PI-16	$\overline{\text{USA3}}$* (Option)
12	PI-20	Ground
13	PI-15	RES
14	PI-18	Ground
15	PI-1	$\overline{\text{RDDA}}$*
16	PI-4	Ground
17	PI-22	RES
18	PI-25	Ground
19	PI-8	$\overline{\text{WRDA}}$*
20	PI-12	Ground

P8 pin	To	Signal
1	PA-1	RD1
2	PA-2	Ground
3	PA-3	RD2
4	PA-4	Ground
5	PA-5	
6	PA-6	
7	PA-7	RC
8	PA-8	Ground
9	PA-9	+12V
10	PA-10	-12V
11	PA-11	$\overline{\text{UHC}}$
12	PA-12	$\overline{\text{UHF}}$
13	PA-13	$\overline{\text{LHC}}$
14	PA-14	$\overline{\text{LHF}}$
15	PA-15	PLSL
16	PA-16	ERC
17	PA-17	WRC1
18	PA-18	WRC2
19	PA-19	+5V
20	PA-20	Ground

RF1	To	Signal
~	TR1-1	
~	TR1-12	
+	Driver print-1	
-	Driver print-6	

RF2	To	Signal
~	TR1-5	
~	TR1-6	
+	Driver print-2	
-	Driver print-4	

RF3	To	Signal
~	TR1-4	
~	TR1-5	
+	RL2-10	
-	RL2-13	

RL1 pin	To	Signal
1	JS-5	PME *
5	RL2-6	
6	RL2-5	
7	JS-2	+24V
10	AS-7	
11	AS-3	
13	AS-5	
14	AS-2	

RL2 pin	To	Signal
1	JS-1	PMD*
5	RL1-6	
6	RL1-5	
7	JS-6	
10	RF3 +	
13	RF3 -	

RL3 pin	To	Signal
1	JS-3	CME*
4	JS-4	+24V
5	AB/CL-2	
7	AS-5	

R8	To	Signal
1	Driver print-14	VPC*
1	VC-2	
2	Driver print-3	

SW1	To	Signal
NO	JC-3	$\overline{\text{RTO}}$
NC	JC-4	RTOG
NC	SW2-NO	
NC	SW3-NC	
C	Ground	

SW2	To	Signal
NO	SW1-NC	
C	Ground	

SW3	To	Signal
NC	SW1-NC	
C	Ground	

SW5	To	Signal
NO	P4-11	$\overline{\text{RETA}}$*
NC	P4-13	$\overline{\text{RETN}}$*
C	P4-14	Ground

SO	To	Signal
1	P4-2	NSTD*
2	P4-1	PSTD*

S1 pin	To	Signal
1	JF-1	$\overline{\text{SBU}}$*
2	JF-2	SBUG*
3	JF-3	$\overline{\text{SBD}}$*
4	JF-4	SBDG*
11	TR1-11	220V AC.

S2 pin	To	Signal
1	JF-7	$\overline{\text{WPBU}}$*
2	JF-8	WPBUR*
3	JF-9	$\overline{\text{WPBD}}$*
4	JF-10	WPBDG*

TR1 pin	To	Signal
1	RF1-AC	
1	F7-2	
2	Driver print-3	
2	TR1-11	
2	AS-3	
3	PV-2	
4	PV-4	
4	AS-8	
4	RF3	AC
5	RF3	40V AC
5	RF2-AC	
6	RF2-AC	
7	PV-19	
8	PV-20	
9	PV-11	
10	PV-12	
11	P1-9	
11	P1-10	
11	P1-14	
11	TR1-2	
11	S1-11	220V AC
12	P1-13	25V eff.
12	AS-1	
12	AS-6	220V AC
12	RF1-AC	
13	PV-17	
14	PV-18	

TS1	To	Signal
B	P1-19	DNC*
B	TS2-B	
C	Driver print-10	CP*
C	TS2-C	
E	Driver print-9	

TS2	To	Signal
B	TS1-B	DNC*
C	TS1-C	CP*
E	Driver print-7	

TS4	To	Signal
B	TS3-B	
C	TS3-C	
E	Driver print-11	

TS3	To	Signal
B	P1-20	DPC
B	TS4-B	
C	Driver print-5	
C	TS4-C	
E	Driver print-13	

TS6	To	Signal
B	AB-6	
C	AB-7	
E	AB-5	

TS7	To	Signal
B	PV-7	
C	PV-9	
E	PV-8	

TS8	To	Signal
B	PV-1	
C	PV-3	
E	PV-5	

TS9	To	Signal
B	PV-13	
C	PV-15	
E	PV-14	

VC	To	Signal
1	Driver print-12	CP *
2	R8-1	VPC *

Earth Screw	To
	CM-K
	AB/AM
	AB/CL
	TR1 Screen

Index Unit	To	Signal
0	JI-5	OPZR*
0	JI-3	Ground
+5V	JI-4	+5 volts DC.
+12V	JI-8	+12 volts DC.
-6V	JI-7	-6 volts DC.
Out	JI-6	OPZ*

Lock Magnet	To	Signal
	AS-3	
	AS-5	

Mains Connector	To	Signal
⏚	FL1 ⏚	Earth
1	FL1-2	220V AC.
2	FL1-4	220V AC. Return

Primary Meander	To	Signal
1	CM-L	PPMC
2	CM-10	NPMC

Rack	To	Signal
0V	AB-3	Ground
+5V	AB-4	+5 volts DC
-12V	PV-16	-12 volts DC
+12V	PV-6	+12 volts DC
+24V	PV-10	+24 volts DC

Running Time Meter	To	Signal
	AS-1	
	AS-4	
	CA-2	

X1215

Cartridge Disk Drive Unit

Vol. X: Installation

Data Systems

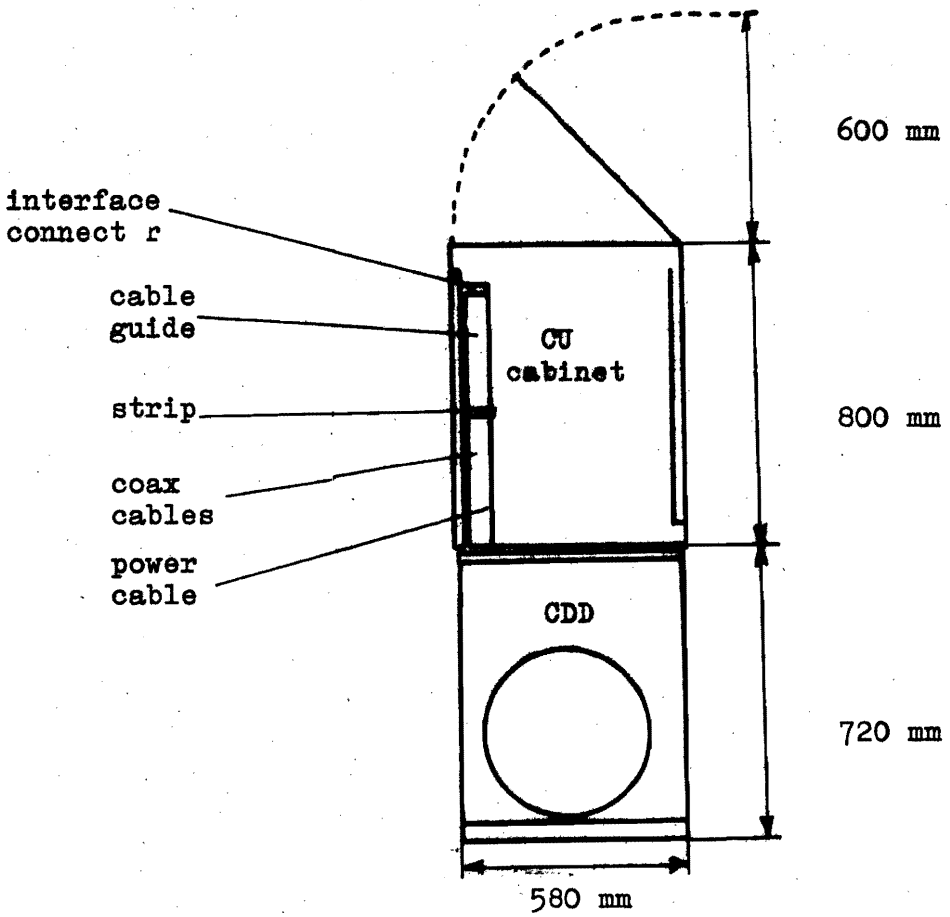

Figure 10-1 SPACE ALLOCATION

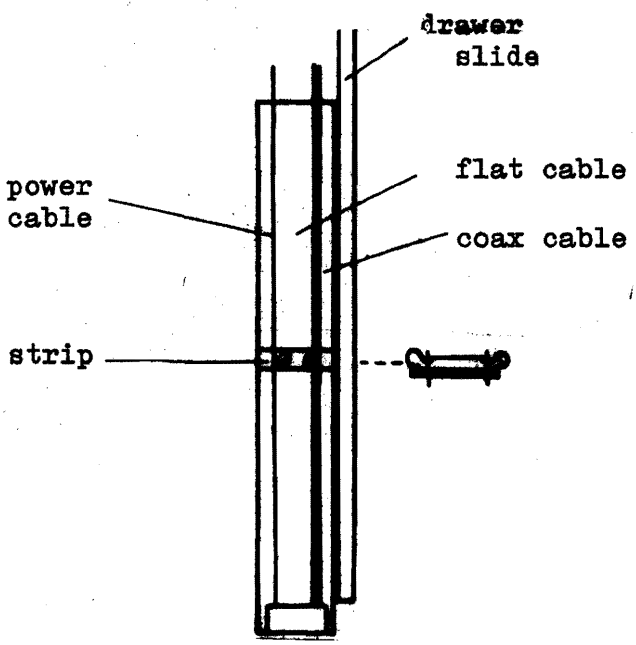

Figure 10-2 CABLE CONNECTIONS

1.1 SPACE LOCATION (figure 10-1)

One CDD mounted in a rack requires a floor area of approximately 600 x 800 mm, when the CDD is mounted on drawing slides an additional 750 mm service area to the front and 650 mm to the rear of the unit should be provided.

1.2 MOUNTING IN THE RACK

1. Pull out the drawer slides.
2. Lift the unit on to the four bolts mounted on the drawer slides.
3. Fasten the unit with four nuts (6 mm).
4. Remove the interface connector from the dummy plate.
5. Fasten the interface cable guide provided to the left drawer slide.
6. Fasten the interface connector to the cable guide.
7. Fasten the interface cable and power cable to the cable guide with the strip provided.
8. Remove the dummy interface cable guide.

1.3 INTERFACE CONNECTIONS (figure 10-2)

Jackscrews on the interface connection cable must be gradually tightened with a screwdriver or damage may result.

1. Refer to the figures 3 and 4, and install the interface cable.

2. Connect the cable between CU and the device.
   This cable is put in the connector on the right side, viewed from the rear of the rack.

   Interface cable and power cable must be fastened as shown in figure 10-2.

1.4 POWER CONNECTIONS

The power cable for the CDD originates at the rear of the unit. (Hirchmann connector).

1) Connect the 1 phase 220 V power cable at the connector on the rear of the unit.
2) Fasten this cable to left post of the rack, viewed from the rear (see fig. 4).
3) Connect the power cable to the terminal block (220 V) located at the bottom of the CU rack.
4) Don't connect the shield of the power cable to any point on the rack.

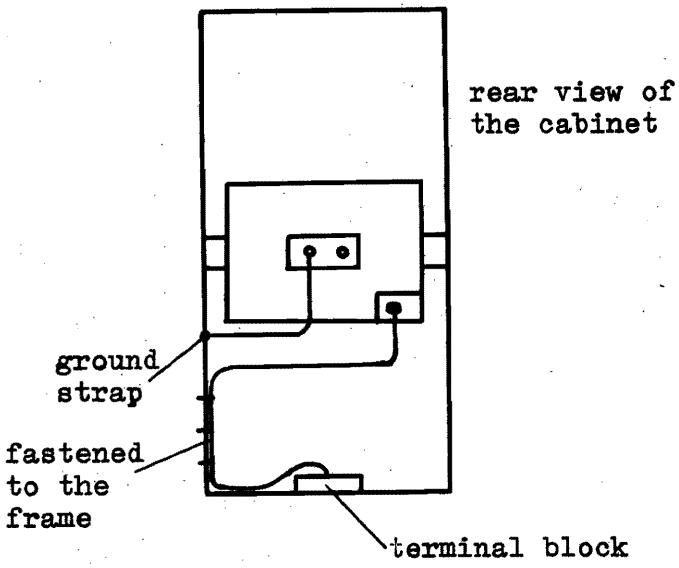

Fig 10-4

1.5 GROUND CONNECTIONS Figure 10-4

1. Connect the unit at the rear side with a ground strap to the rack or the frame. The length of the strap is about 100 cm.

1.6 INPUT POWER REQUIREMENTS

The CDD requires an input source capable of supplying 220 V + 10%, - 15%. 50 Hz ± 1%.

Primary 220 V AC 1 phase
VA cos 0,7 to 0,8 (operating)
VA cos 0,7 to 0,8 (pack motor off)
2,6A/phase surge current
Heat dissipation 500 Watt.

2. CHECK OUT AND START UP PROCEDURE

This procedure should be used to make the first power application to the C.D.D. The procedure assumes that the preceding procedures and requirements of this section have been performed and satisfied.
Instructions are given for the C.D.D. only.

1. Remove the four crosshead screws of the rear cover, remove the two crosshead screws of the front cover and disconnect the transport lock string of the carriage.

2. Check that all plugs and logic cards are firmly seated in their connectors.

3. Check that all heads in retracted position are retired by the head loading cam block.

4. Note the count of the elapsed time meter.

5. Make sure that the power cable is connected to the correct external power source, see installation 1.6.

6. If the external AC power to the device is protected by a main switch, set the mainpower switch to ON. Turn on the C.D.D. The power on switch is located on the rear of the unit.

7. Place a cartridge on the spindle, start and stop immediately.

8. Repeat step 7 about 5 times, so that the cleaning cycle will run a few times.

9. When the disk pack has achieved operational speed the brushes are returned to a position clear of the disk pack. The voice coil system drives the carriage to load the Read/Write heads. When the heads are loaded, on the operators panel, the unit ready (UR) indicator lights and the heads stay at CYL. 000.

10. With the mainpower OFF, install a CE disk pack. Remove the WC (1A24) card and replace with the CE write disable card. Switch on the mainpower, start pack motor and when the heads are loaded wait about 2 hours and precede as described in volume VII, chapter 3.6 of the manual.

11. Stop spindle motor.

12. Switch off the mainpower.

13. Fasten the front and rear cover.

X1215

Cartridge Disk Drive Unit

Vol. XI: Packing and Unpacking

Data Systems

During uncrating; care must be taken so that tools being used do not inflict damage to any assembly. As a CDD is uncrated, inspect it for possible shipping damage.
All claims resulting from this type of damage should be promptly filed with the carrier involved.
If a claim is filed for damages, save the original crating materials. Most crating materials will be re-usable if reasonable care is taken in uncrating.
Uncrate and inspect the CDD as outlined in the following chapters.
Let the uncrated unit acclimate in the computerroom for 2 hours before operating.

The CDD is transported on a wooden pallet designed for handling by a fork-lift truck. The fork width must be set to at least 75 cm when inserted from the side.
It is important that the mechanical shocks be kept to a minimum during transport.

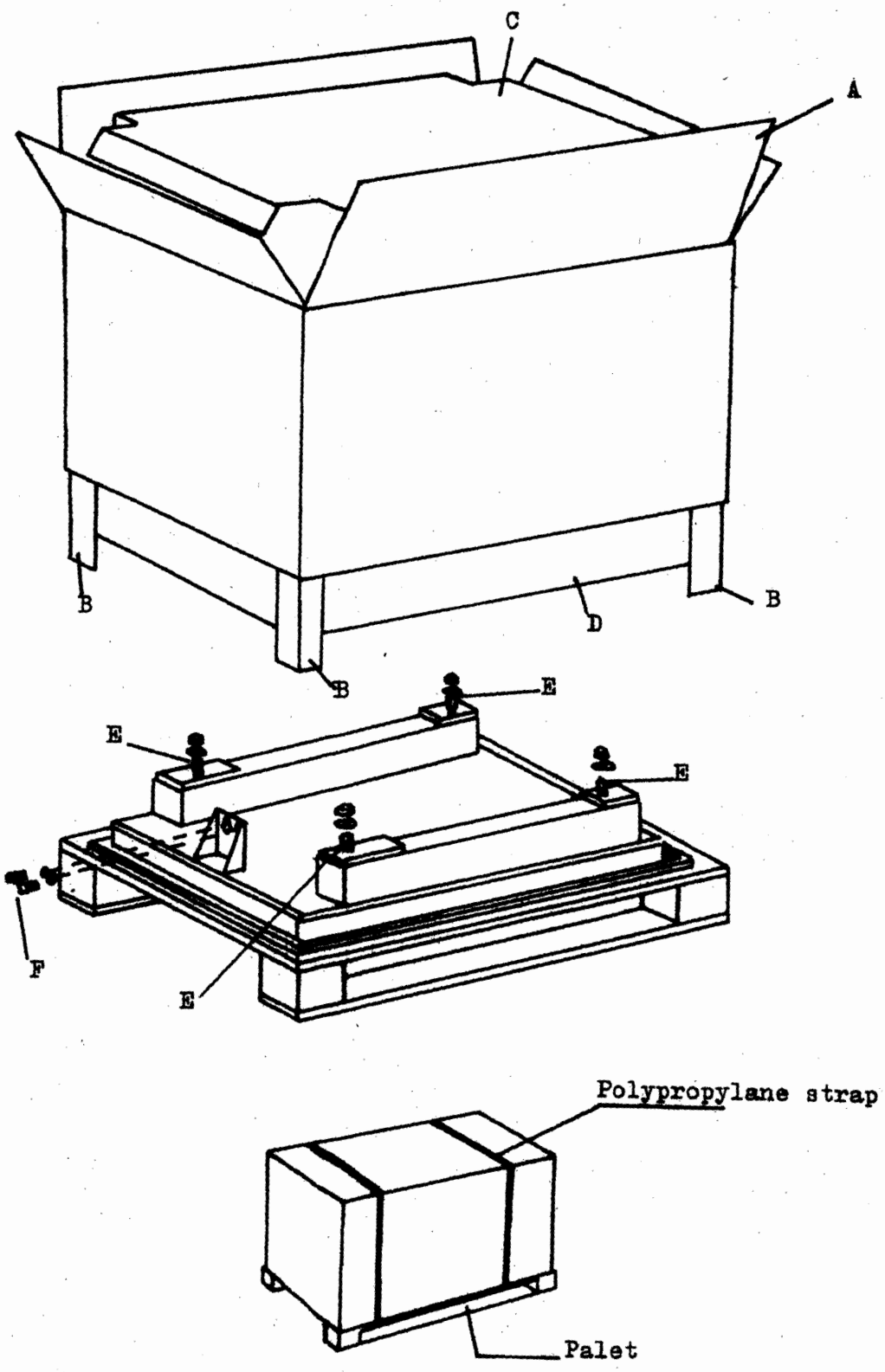

Fig 11-1 UNIT STORAGE

3.1 PACKING (fig 11-1)

1) Remove the 4 crosshead screws of the rear cover and the 2 crosshead screws of the front cover.
2) Put the plastic cover on the palet over the 4 bolts.
3) Lift the unit on the palet.
4) Fasten the unit with 4 nuts. (E)
5) Fasten the front and rear cover.
6) Close the plastic cover with adhesive tape.
7) Put over the cardboard sleeve. (D)
8) Put over the cardboard box. (A)
9) Put in the cardboard on each corner. (B)
10) Put on the cardboard cover. (C)
11) Close the cardboard box.
12) Pass the polypropylane straps under the top surface of the pallet. Pass the straps over the box top and bring the ends of each strap together (see also unpacking).

3.2 UNPACKING (fig 11-1)

1. Remove the two polypropyl straps securing the protective covers.
2. Remove the corrugated cardboard box (A) by lifting it.
3. The corrugated cardboards (B) on each corner are released, so remove them.

4. Remove the second corrugated cardboard cover (C) by lifting it.

5. Remove the corrugated cardboard sleeve (D).

6. Open the plastic cover.

7. Remove the 4 crosshead screws of the rear cover and the 2 crosshead screws of the front cover.

8. Remove both covers.

9. Remove 4 fastening nuts (E) at both sides and the 2 hex screws (F) at the rear of the unit with which the unit is fixed on the pallet.

10. Lift the unit from the pallet and insert carefully in the rack.

Note: It is possible to re-use the packing materials for transportation, in which case they need a dry storage area.