

Data
Systems

PHILIPS

Field Support Manual

P859 Rack(M4R) & Power Supply

A PUBLICATION OF
PHILIPS DATA SYSTEMS
APELDOORN, THE NETHERLANDS

PUB. NO. 5122 991 30781

DATE January 1981

Great care has been taken to ensure that the information contained in this handbook is accurate and complete. Should any errors or omissions be discovered, however, or should any user wish to make a suggestion for improving this handbook, he is invited to send the relevant details to:

PHILIPS DATA SYSTEMS
SERV. DOC. AND TRAINING DEPT.
P.O. Box 245, APELDOORN,
THE NETHERLANDS.

Copyright © by PHILIPS DATA SYSTEMS.
All rights strictly reserved. Reproduction or issue to third parties in any form whatever is not permitted without written authority from the publisher.

SERVICE MANUAL STATUS RECORD

TITLE : P859 RACK (M4R) AND POWER SUPPLY

PUBLICATION NUMBER : 5122 991 30781

PUB. NO. 12th digit	UPDATE PACKAGE	SI. NO.	PAGES AFFECTED	DATE	REMARKS
1					Issued 8101
	1		6-20	8204	Conversion list added

TABLE OF CONTENTS

			PAGE
CHAPTER	1	GENERAL DESCRIPTION	1-1 thr. 1-22
	2	FUNCTIONAL DESCRIPTION	2-1 thr. 2-6
	3	DETAILED DESCRIPTION	3-1 thr. 3-18
	4	DIAGRAMS	4-1 thr. 4-11
	6	PARTS LISTS	6-1 thr. 6-24
	7	MAINTENANCE	7-1 thr. 7-7

1 GENERAL DESCRIPTION

SECTION	1.1	INTRODUCTION	PAGE 1-3
	1.2	PHYSICAL DESCRIPTION	1-3
	1.3	TECHNICAL DATA	1-4
	1.3.1	Power Input	1-4
	1.3.2	Power Supply Outputs	1-4
	1.3.3	Power Supply Protection	1-5
	1.3.4	Power Failure Signal	1-5
	1.3.5	Reset Line	1-5
	1.3.6	Real Time Clock Pulse	1-5
	1.3.7	Battery Back-Up Supplies	1-5
	1.3.8	Battery Back-Up Supply Protection	1-5
	1.3.9	Battery Back-Up Time	1-6
	1.3.10	Battery Charge Time	1-6
	1.3.11	Environmental Conditions	1-6
	1.3.12	Physical Characteristics	1-6
	1.4	INTERFACES	1-6
	1.4.1	Power Supply to System	1-6
	1.4.2	Mains Supply	1-6
	1.4.3	Operator's Panel	1-6
	1.4.4	Key Switch	1-7
	1.4.5	Extension Racks	1-7
	1.4.6	CPU Interfaces	1-7
	1.4.6.1	Connector J1	1-7
	1.4.6.2	Connector J3	1-7
	1.4.6.3	Connector J5	1-8
	1.4.7	Battery Back-Up System	1-8
	1.5	APPLICATION NOTES	1-8

SECTION	1.6	INSTALLATION DATA	PAGE 1-8
	1.6.1	Mains Input Voltage	1-8
	1.6.2	Strap Settings	1-9
	1.6.3	Logic Card Mounting	1-9
	1.6.4	Extension Rack Connection	1-9
	1.6.5	Mains Connection	1-10
	1.6.6	Power Supply Accuracy	1-10
	1.6.7	Mains Fuse	1-10
	1.6.8	Battery Back-Up System	1-10

LIST OF ILLUSTRATIONS

Figure	1.1	M4R Rack	1-11
	1.2	M4R Rack Functions	1-12
	1.3	Back Panel PCB	1-13
	1.4	Rear View of M4R Rack	1-14
	1.5	Outline Drawing of M4R Rack	1-15
	1.6	Real Time Clock Pulse	1-16
	1.7	Connector CONN1 of CPU	1-16
	1.8	M4R Regulator Card	1-17
	1.9	M4R Battery Option Card	1-18
	1.10	M4R Heatsink Assembly	1-19

LIST OF TABLES

Table	1.1	GP Bus Connections	1-20
	1.2	Connections to Connector J5 of CPU	1-21
	1.3	Extension Rack Connections IOM and IOB	1-22

1.1 INTRODUCTION

The M4R Rack is the main framework for P859 systems. Up to ten logic cards (including a CPU card) can be mounted in the rack. The rack includes an M4R Power Supply and an optional Battery Back-Up system for memory. The power supply provides the following supplies and signals to cards mounted in the rack:

- +5V logic supply (+5VL)
- +16, -5V memory supplies (+16VM, -5VM)
- +18V, -18V (nominally +16V, -16V) data communication supplies (+18V, -18V)
- Power failure signals PWFN, RSLN

Additionally the power supply provides the CPU with a real time clock pulse RTCN.

The battery back-up system, if fitted:

- Maintains the +16VM supply in the event of a mains power failure
- Generates a +5V memory supply (+5VM) and maintains it in the event of a mains failure. If the battery back-up system is not fitted, this supply is taken from the +5VL supply.
- Generates "Battery was off" signal BAWOFN to the CPU.

A key switch mounted on the front of the rack permits the power supply to be switched on and off and controls the operation of the battery back-up system, if fitted.

An operators control panel may be mounted on the front of the rack, see figure 1.1, which provides direct access to the CPU.

Figure 1.2 shows the basic electrical functions of the rack components.

1.2 PHYSICAL DESCRIPTION

The rack comprises an aluminium "basic mounting box" in which are mounted a power supply unit, 10 card slots for logic cards of the "Belier" format, a key switch and the back panel pcb, see figure 1.1.

The back panel pcb provides bussed interconnections between the logic cards, this is the General Purpose Bus (GP Bus). Connector J3 of each logic card mates with a connector on the reverse of the back panel, the connector (and mounting slot) at the top of the rack being reserved for the CPU, see figure 1.3. The back panel is mounted on the side of the rack and protudes into the power supply unit where connections are made for the power supplies and power failure signals.

The operators panel is bolted on the front of the rack. A plug on the back of the panel mates with a 9 pin connector on a flying lead mounted on the front of the rack. A cut-out is provided in the panel for the key switch which is also mounted on the front of the rack.
Racks are mounted in a standard 19 inch cabinet and are fitted with telescopic slides for easy access.
The M4R Power Supply Unit is mounted in a box at the top of the rack. The battery back-up system (if fitted) is mounted in this same box. The ten horizontal card slots are mounted underneath the power supply. The rack is ventilated by two fans mounted at the back which draw air horizontally across the logic cards and the heatsink assembly of the power supply, see figure 1.4.
The rack operates on a single phase mains supply which is supplied via a socket mounted on the side of the rack.
The physical dimensions of the rack are given in the outline drawing at figure 1.5.

1.3 TECHNICAL DATA

1.3.1 POWER INPUT

Single phase mains supply at 50Hz. ± 2Hz.
or 60Hz. ± 3Hz.
Voltage 110/115V ± 10% at 8 amps.
or 220/240V ± 10% at 4 amps.

The rack is adapted to mains voltage with soldered U-links on the regulator pcb in the power supply unit, see paragraph 1.6.1.

1.3.2 POWER SUPPLY OUTPUTS (DC)

. +5VL;	+5V, 60A max.	± 3% stability due to 10% mains and dynamic load variation, 20-100% static load variation. Ripple and noise ⩽ 1% (0 - 30MHz.).
. -5VM;	-5V, 0.8A max.	± 5% stability due to 10% mains and dynamic load variation, 10-100% static load variation. Ripple and noise ⩽ 1% (0 - 30MHz.).
. +16VM;	+16V, 3A max.	± 15% stability due to 10% mains and dynamic load variation, 10-100% static load variation. Ripple and noise ⩽ 1% (0 - 30MHz.).
. +18V ;	-16V, 2A max.	
. -18V ;	-16V, 2A max.	

1.3.3 POWER SUPPLY PROTECTION

. Mains supply - Protected with a slow blow fuse

. +5VL supply - Overcurrent limit between 60 and 70 amps.
- Overvoltage limit between +5.5 and + 7.5V

. -5VM supply - Overcurrent limit between 0.8 and 3 amps.
Overvoltage limit between -5.5 and -7.5V

. +16VM supply
. +18V supply
. -18V supply
- No over voltage protection
- No over current protection but a short circuit will not damage these supplies.

1.3.4 POWER FAILURE SIGNAL PWFN

Signal active low - logical 0

0 to +0.5V, sink current 48mA

1.3.5 RESET LINE RSLN

Signal active low - logical 0

0 to +0.5V, sink current 150mA

When the mains supply is not present this signal is a true 0 volts via a relay contact to logical ground.

1.3.6 REAL TIME CLOCK PULSE RTCN

This signal is a train of 1μs logical 0 pulses, see figure 1.6.

Logical 0 - low

0 to +0.5V, sink current 48mA

1.3.7 BATTERY BACK-UP SUPPLIES - if fitted

.+5VM; +5V, 8A max. -3% stability due to 10% mains and dynamic load variation and 10-100% static load variation.
Ripple and noise $\leqslant$ 1% (0 - 30MHz.).

This supply is generated under normal operating conditions with mains supply on and during mains failure, see paragraph 1.3.9.

.+16VM; as for +16VM supply from power supply unit, see paragraph 1.3.2.
This supply is generated only during mains failure.

1.3.8 BATTERY BACK-UP SUPPLY PROTECTION - if fitted

.+5VM; - Overcurrent limit between 8 and 10A.
Overvoltage limit between +5.5 and +7.5V.

.+16VM; - As for +16VM supply from power supply unit, see paragraph 1.3.3.

1.3.9 BATTERY BACK-UP TIME

A rechargeable battery maintains the +5VM and +16VM supplies during mains failures for the following times:

MOS memory of 128K words - 60 minutes
256K words - 30 minutes
512K words - 10 minutes

1.3.10 BATTERY CHARGE TIME

A completely discharged battery can be fully charged in 48 hours.

1.3.11 ENVIRONMENTAL CONDITIONS

Max. ambient temperature range : 0 - 50°C.
Max. relative humidity : 90%

1.3.12 PHYSICAL CHARACTERISTICS (refer to figure 1.5)

- height : 266 mm
- width : 483 mm
- depth : 563 mm
- weight : < 20 kg when fully equipped (front panels,, logic cards, etc.).

1.4 INTERFACES

1.4.1 POWER SUPPLY TO SYSTEM

The power supply interfaces to the rest of the system via the GP Bus on the back panel pcb (see table 1.1) and via discrete connections to connector J5 of the CPU (see table 1.2). Logic signals PWFN, RSLN and RTCN are taken from the power supply (each with an individual ground lead) as twisted pairs.

1.4.2 MAINS SUPPLY

The single phase mains supply is fed via a socket mounted on the left hand side of the rack, see figure 1.4.

1.4.3 OPERATORS PANEL

The operators control panel interfaces via a 9 pin connector on a flying lead mounted on the front of the rack, (this is normally inaccessible, being covered by the operators panel). The other end of the flying lead is connected to a 9 pin socket which is discrete wired to connector J5 of the CPU except the +5V supply which is obtained from the bus at connector J3 of the CPU, see figure 4.1.

1.4.4 KEY SWITCH

Signal BATOFFN is generated by the key switch, this is discrete wired to the battery back-up system (if fitted) via a twisted pair. The key switch also operates a microswitch via a cam which generates the remote start signal to the power supply and is wired via a screened cable, see figure 4.1.

1.4.5 EXTENSION RACKS

When used these are interfaced via two connectors IOB and IOM mounted on the bottom of the back panel (figure 1.3). The extension racks are connected via GP Bus cables (see table1.3). Refer also to paragraph 1.6.4.

1.4.6 CPU INTERFACES

The CPU interfaces to the rest of the system via connectors J1, J3 and J5 (see tables 1.1 and 1.2). The following interfaces are wired as standard on the basic M4R rack:

- V24 serial
- CU break requests — connector J1
- OKO/OKI bus control
- GP Bus — connector J3
- Operators Panel
- "Battery was off" indication — connector J5
- Floating Point Processor

1.4.6.1 CONNECTOR J1

Connector J1 of the CPU is mounted on a small printed circuit card, CONN1, which is mounted to the left of the back panel pcb, see figure 1.7. On this card are also mounted connector pins for the V24 interface, break request inputs either from CU cards mounted in the main rack (CPU rack) or from CU cards mounted in extension racks, and for the bus control chain OKO/OKI. These interfaces are described in detail in the CPU manual.

1.4.6.2 CONNECTOR J3

The CPU interfaces to the GP Bus at connector J3. Those signals which concern the power supply are listed in table 1.1. For further details refer to the CPU manual.

1.4.6.3 CONNECTOR J5

Connections at connector J5 of the CPU to the battery back-up (BAWOFN), the power supply (RTCN) and the operators panel are shown in table 1.2. When a floating point processor is used in a system it must be mounted at slot 2. The FPP interfaces with the GP Bus at connector J3 and in addition some discrete wired connections are made to the CPU at connector J5. These connections are also shown in table 1.2. Note: When a floating point processor is not used any logic card can be mounted at slot 2.

1.4.7 BATTERY BACK-UP SYSTEM (if fitted)

The battery back-up system interfaces to the rest of the system via discrete wiring. "Battery was off" indication, BAWOFN, is wired as a twisted pair to connector J5 of the CPU, see table 1.2. Battery back-up control signal, BATOFFN, is wired from the key switch as a twisted pair, see figure 4.1. Other connections to the power supply unit and the +5VM and +16VM supplies to the bus are made inside the power supply box.

1.5 APPLICATION NOTES

Figure 1.2 shows the basic functions of the rack. The rack has been designed for P859 systems. These systems use the CP7R type CPU, MOS memory (up to 512K words - four cards) and FRCP type operators panel. The first slot (at the top) is reserved for the CPU. Slot 2 is reserved for the floating point processor (if used). Logic cards used with the rack must be of the "Belier" format. Rack capacity may be extended with the E2 extension rack. This provides +5V, -5V and +16V supplies (from a single phase as mains input) and mounting slots for up to six control units.

1.6 INSTALLATION DATA

1.6.1 MAINS INPUT VOLTAGE

The power supply is adapted to the mains voltage with four soldered U-links on the Regulator card, see figure 1.8. The following connections should be made:

220/240V: a-b, d-e, g-h, j-k

110-120V: b-c, e-f, h-i, k-l

The mains fuse, figure 1.4 is rated at 4A for 220V or 8A for 110V. The ventilator fan assembly mounted on the rear of the rack is chosen for the mains voltage with which it will be used. For a 220V supply two 115V fans are connected in series. For a 110V supply two 115V fans are connected in parallel.

1.6.2 STRAP SETTINGS

Two soldered U-links are fitted to the regulator card, figure 1.8, for test purposes, TL1 and TL2. These should both be fitted for normal operation.

1.6.3 LOGIC CARD MOUNTING

All logic cards used with the rack must be securely mounted in the correct slots. Slot positions are given in the system configuration sheets. The cards are held in position with plastic release catches. All discrete wiring specific to a system must be made. For information on these refer to the Installation section of the individual manuals for each card and the system configuration sheets.

1.6.4 EXTENSION RACK CONNECTION

Extension racks are connected via two GP Bus cables connected at connectors IOB and IOM at the bottom of the back panel pcb. The GP Bus cables are of two standard lengths, 3 metres and 15 metres. The following rules must be observed when connecting extension racks:

1) Bus cables are connected between the connectors at the bottom of the back panel pcb of the CPU rack to the connectors at the bottom of the back panel of the extension rack.
   For subsequent extension racks connected in a chain, the bus cables are connected between the connectors at the top of the back panel of the previous rack to those at the bottom of the following rack.
2) The cable must be connected so that pin 50 of each connector is connected to the same wire of the cable. A red line printed on the cable may be used as a reference.
3) The last extension rack in a chain must have a terminator network plugged into the connectors at the top of the back panel pcb.
4) Maximum cable length (between CPU rack and the last extension rack in a chain) = 15 metres.
5) Maximum number of extension racks used = 7; however, this is limited to 5 because of the standard cable length of 3 metres.
6) Extension racks must be equally spaced along the bus cable.
7) Maximum number of logic cards used in each extension rack = 6. These must all be control unit cards.
8) The extension racks may only be used with slave control units. Cards which are system masters must be mounted in the CPU rack.

1.6.5 MAINS CONNECTION

The single phase mains supply is connected via a socket mounted on the right hand side of the rack. The mains supply must comply with the rating plate mounted near the mains socket. Before connecting the mains supply set the key switch on the front of the rack to position "OFF".

1.6.5 POWER SUPPLY ACCURACY

The power supplies are set up to the specified tolerances (para. 1.3) in the factory before dispatch. Any discrepancy may be due to an inaccurate mains supply, this should be checked before any adjustment is made. Information on power supply adjustment is given in chapter 7 of this manual.

1.6.7 MAINS FUSE

The single mains fuse is mounted on the right hand side of the rack near the mains socket, see figure 1.4. This is a slow blow fuse rated at 4 amps for 220V supply or 8 amps for a 110V supply.

1.6.8 BATTERY BACK-UP SYSTEM (if fitted)

No installation procedures are necessary for this system. Connections to the Battery card are made at system installation time. Figure 1.9 shows the connector position on this card. Information on adjustment of the +5VM supply (if necessary) is given in chapter 7 of this manual.

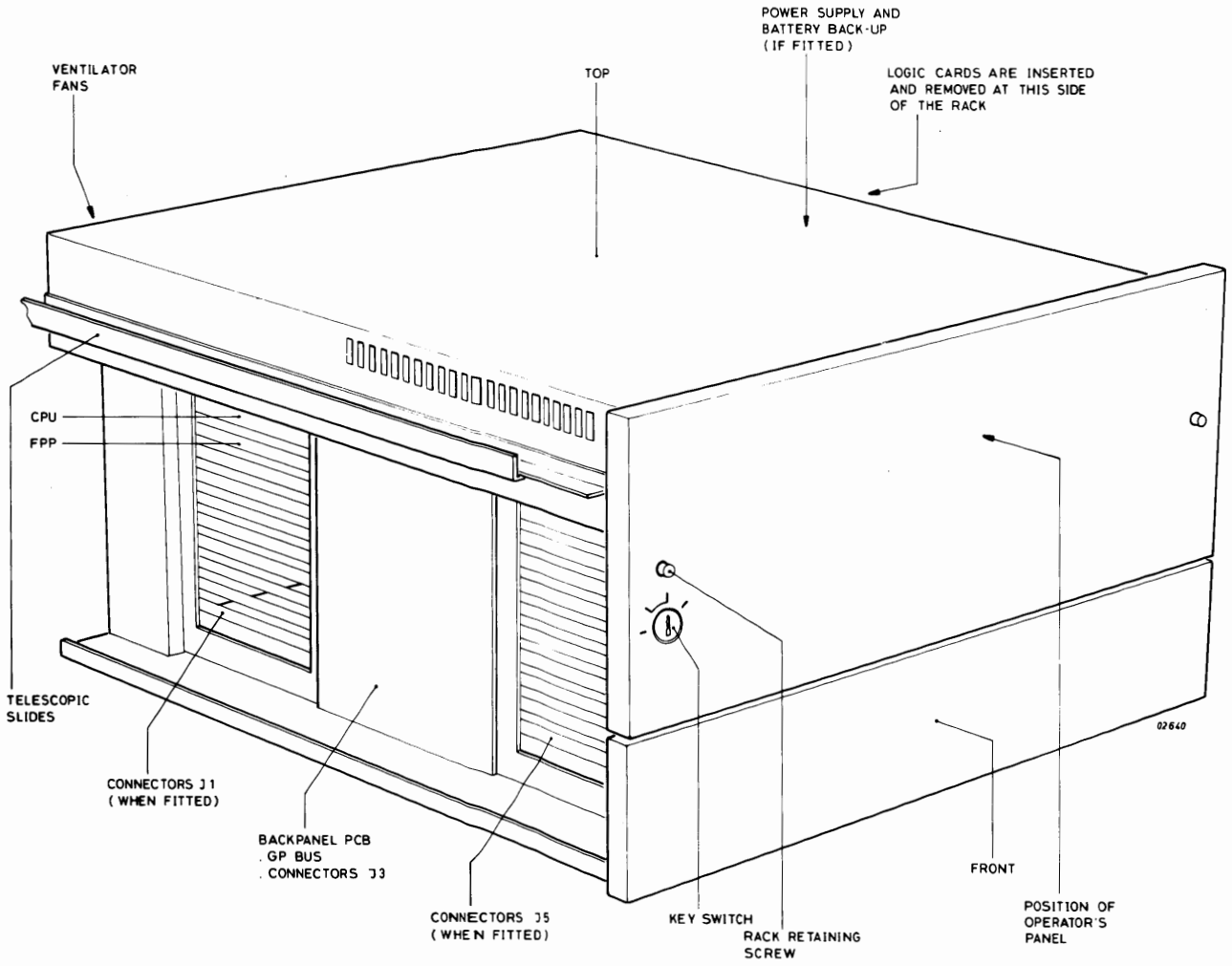

Figure 1.1 M4R RACK

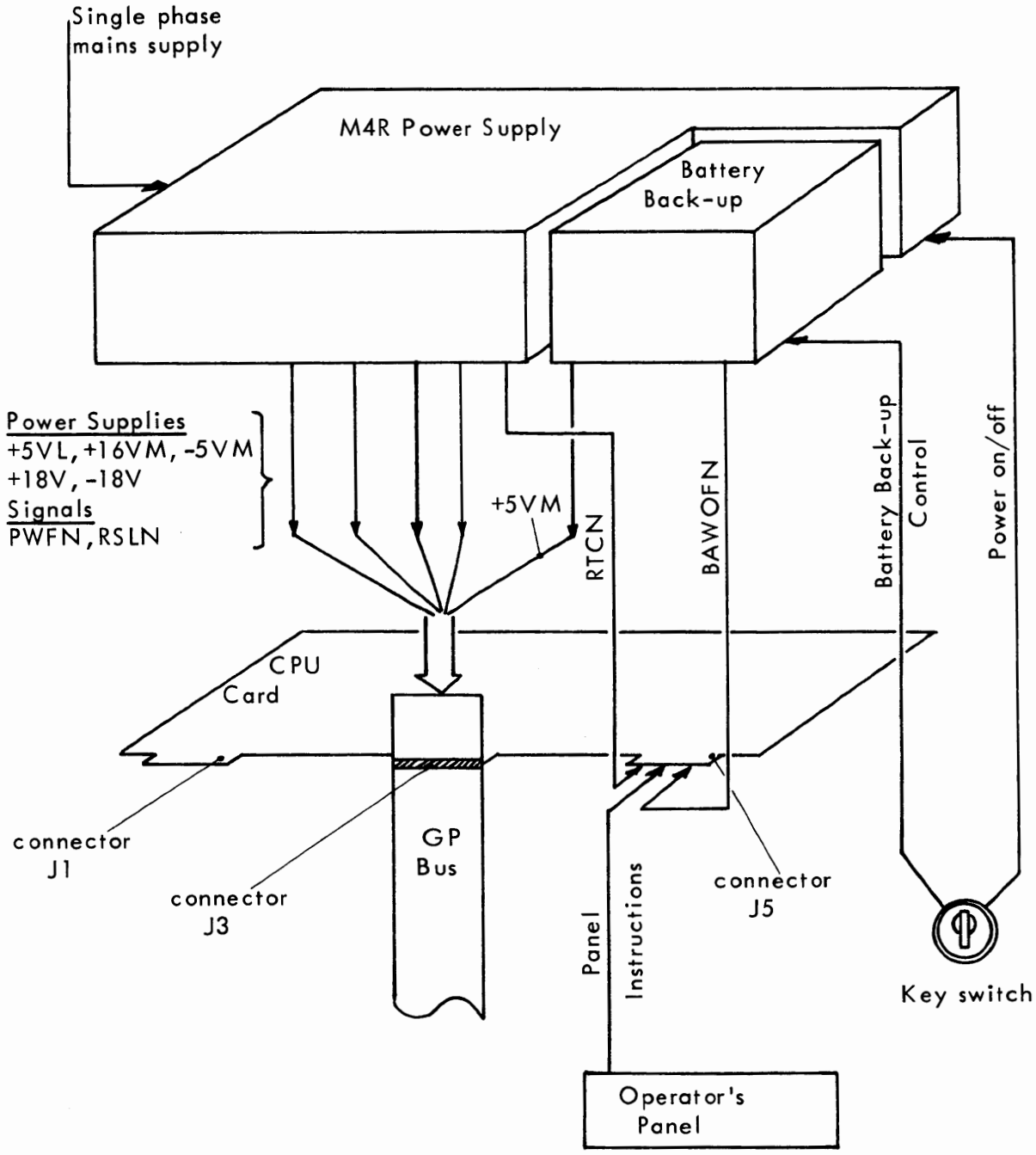

Figure 1.2 M4R RACK FUNCTIONS

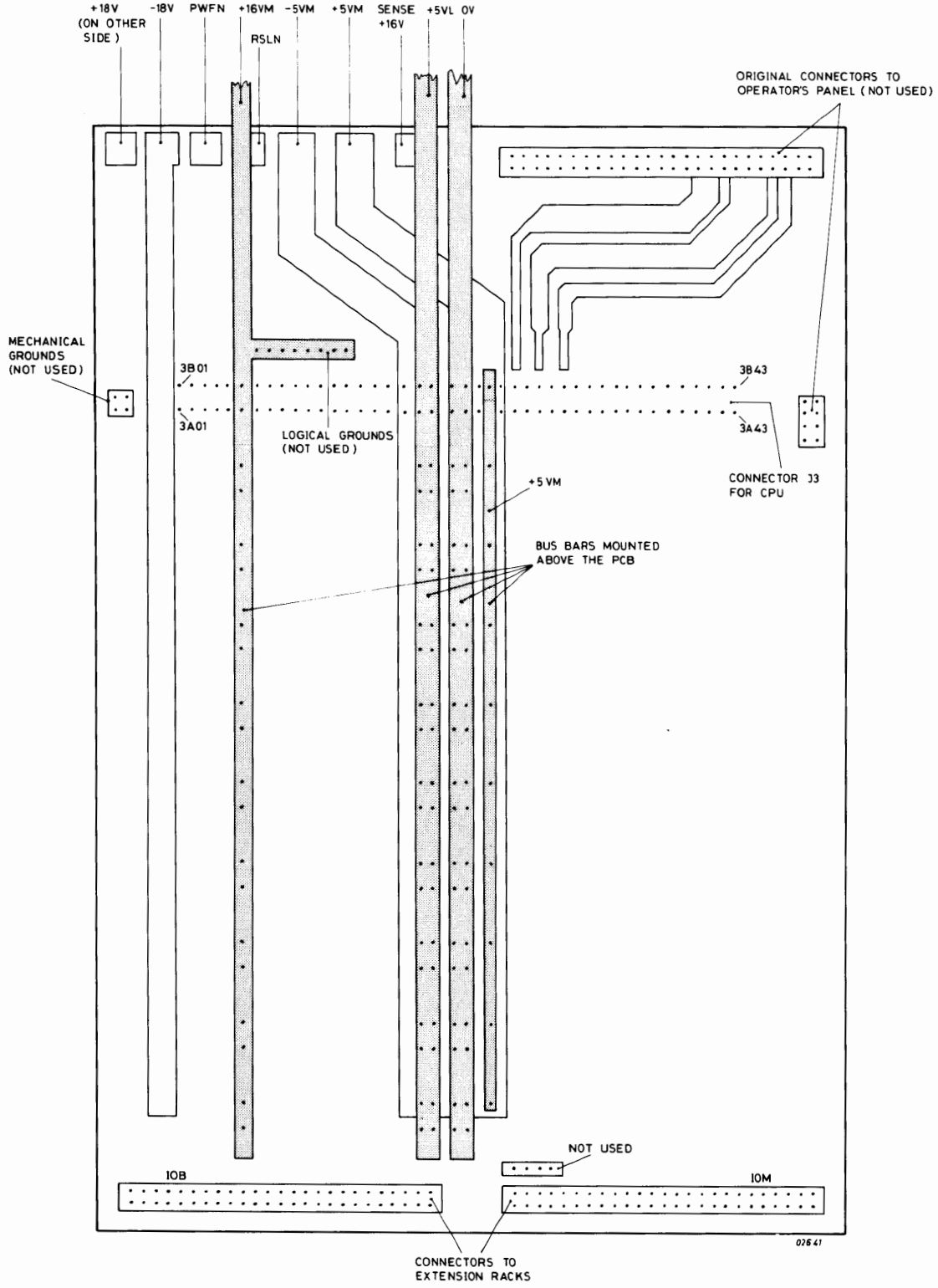

Figure 1.3 BACK PANEL PCB (GP BUS)

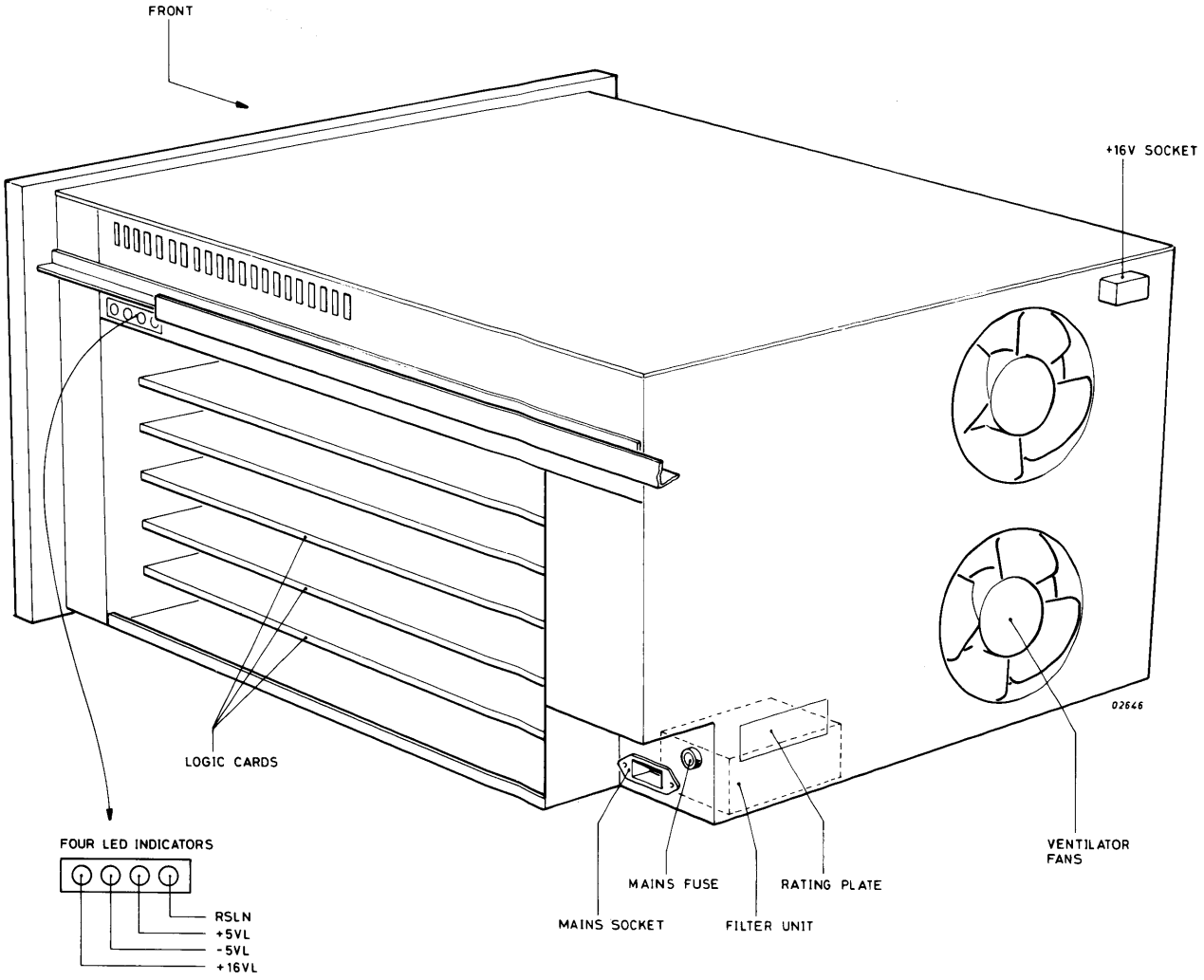

Figure 1.4 REAR VIEW OF M4R RACK

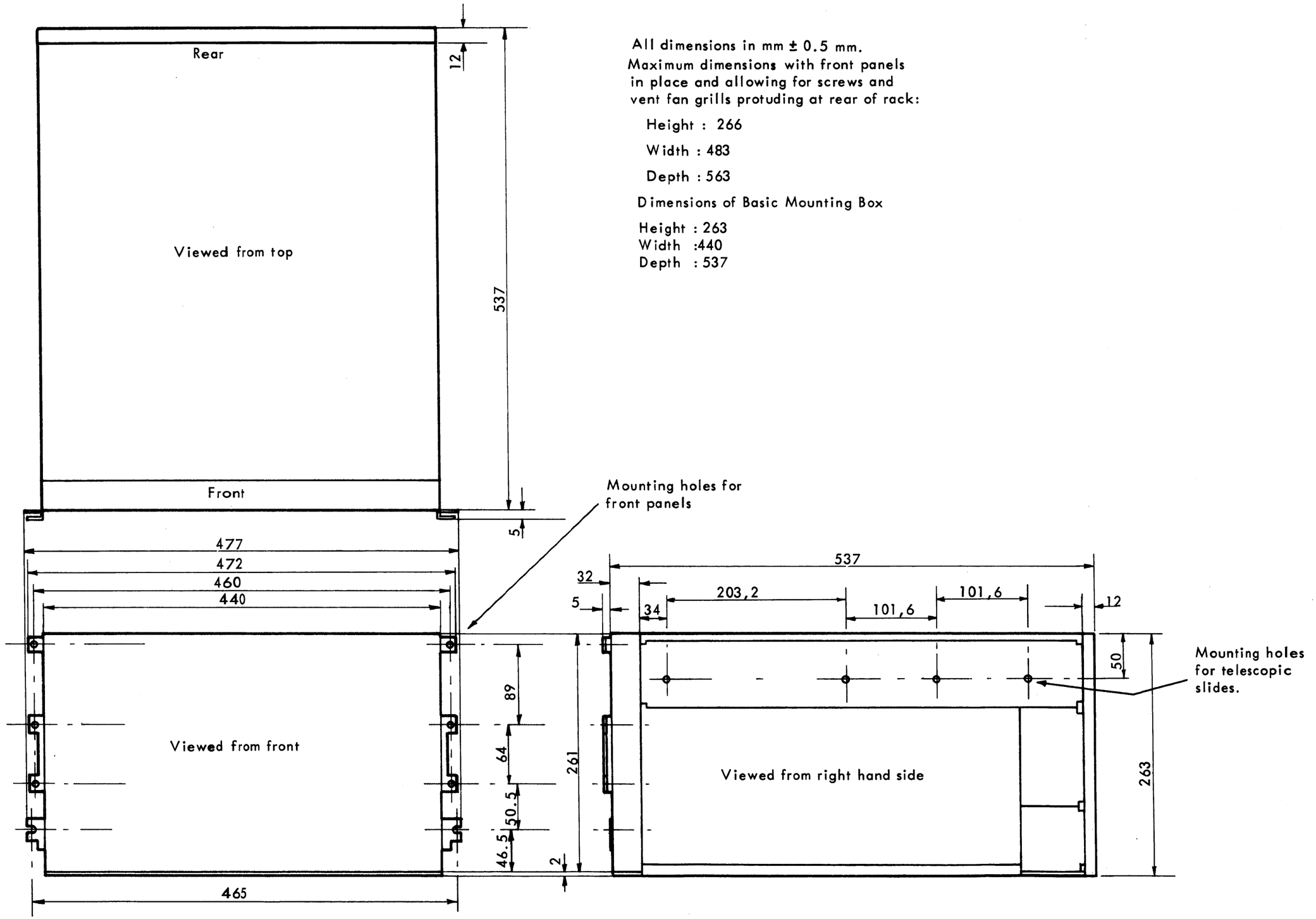

All dimensions in mm ± 0.5 mm.
Maximum dimensions with front panels in place and allowing for screws and vent fan grills protuding at rear of rack:

Height : 266

Width : 483

Depth : 563

Dimensions of Basic Mounting Box

Height : 263
Width :440
Depth : 537

Figure 1.5 OUTLINE DRAWING OF M4R RACK

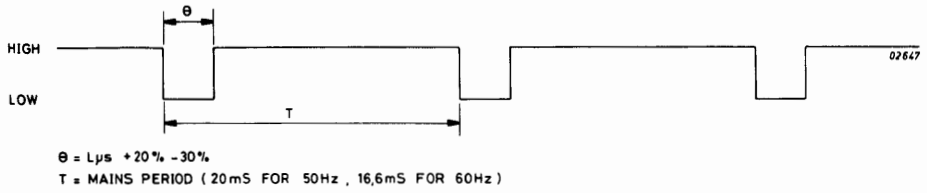

Figure 1.6 REAL TIME CLOCK PULSE

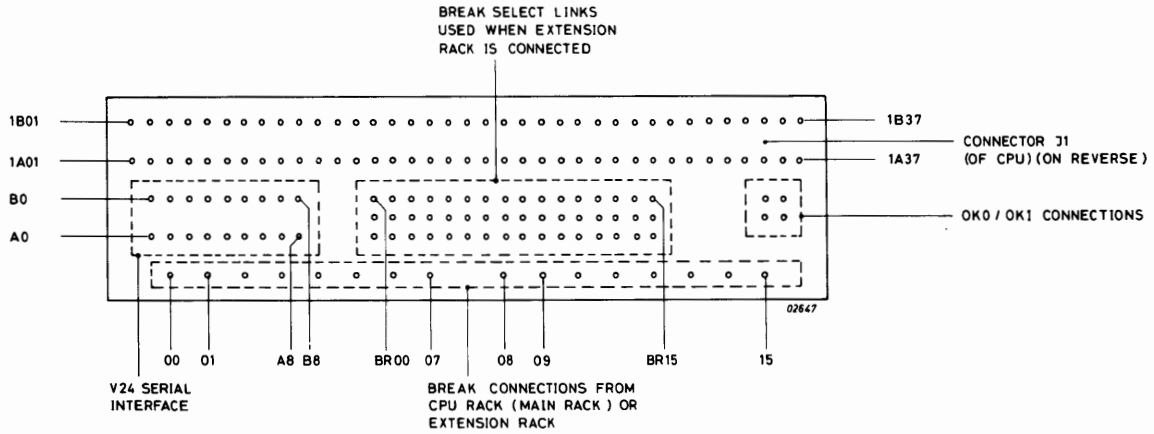

Figure 1.7 CONNECTOR CONN 1 (J1) FOR CPU

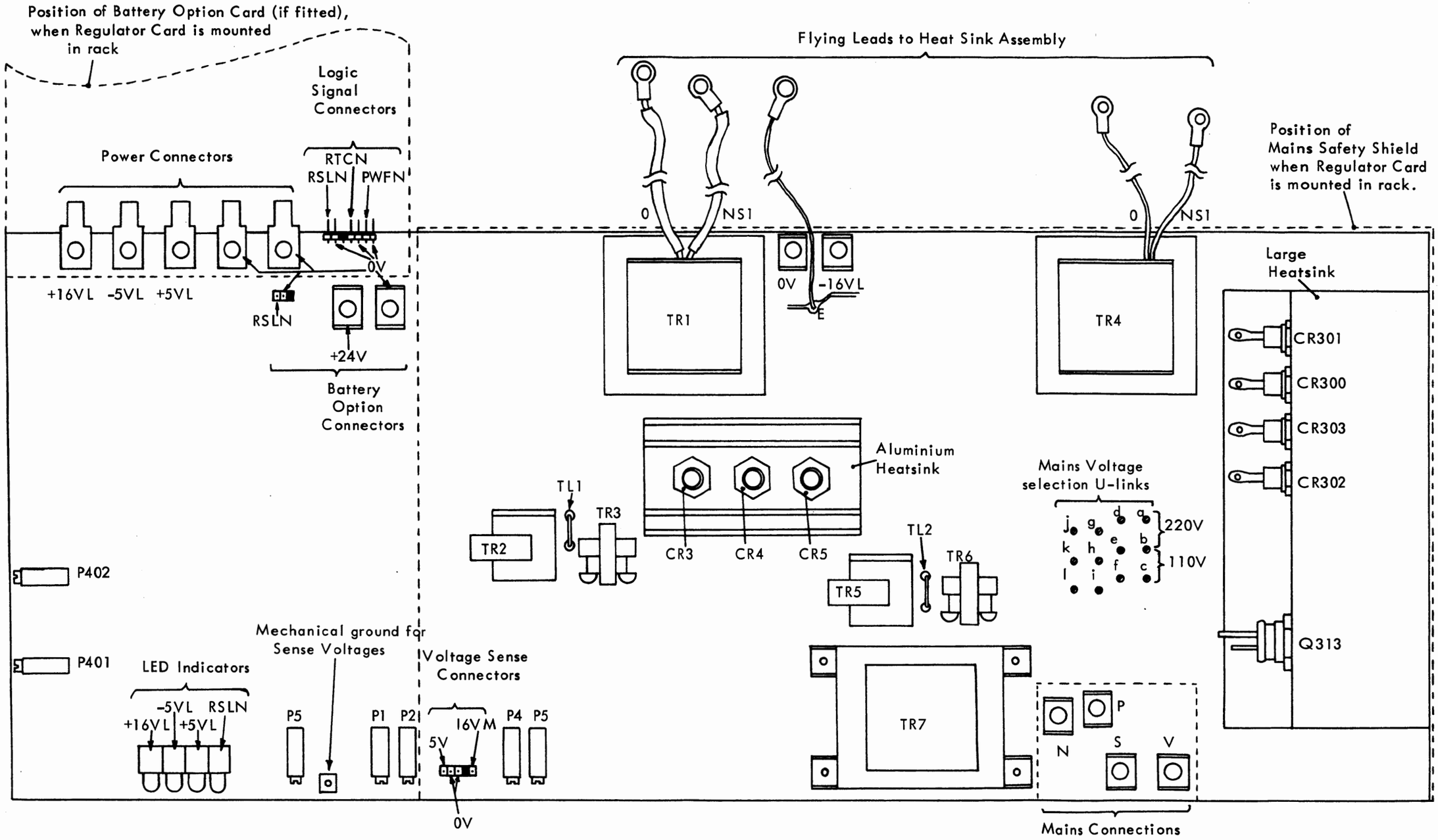

Note: Each of the three strip connectors (▭) is shown with one pin position blacked out. These pins are cut off to provide a locator which mates with the key way on the associated Berg flying lead connector.

Figure 1.8 M4R REGULATOR CARD

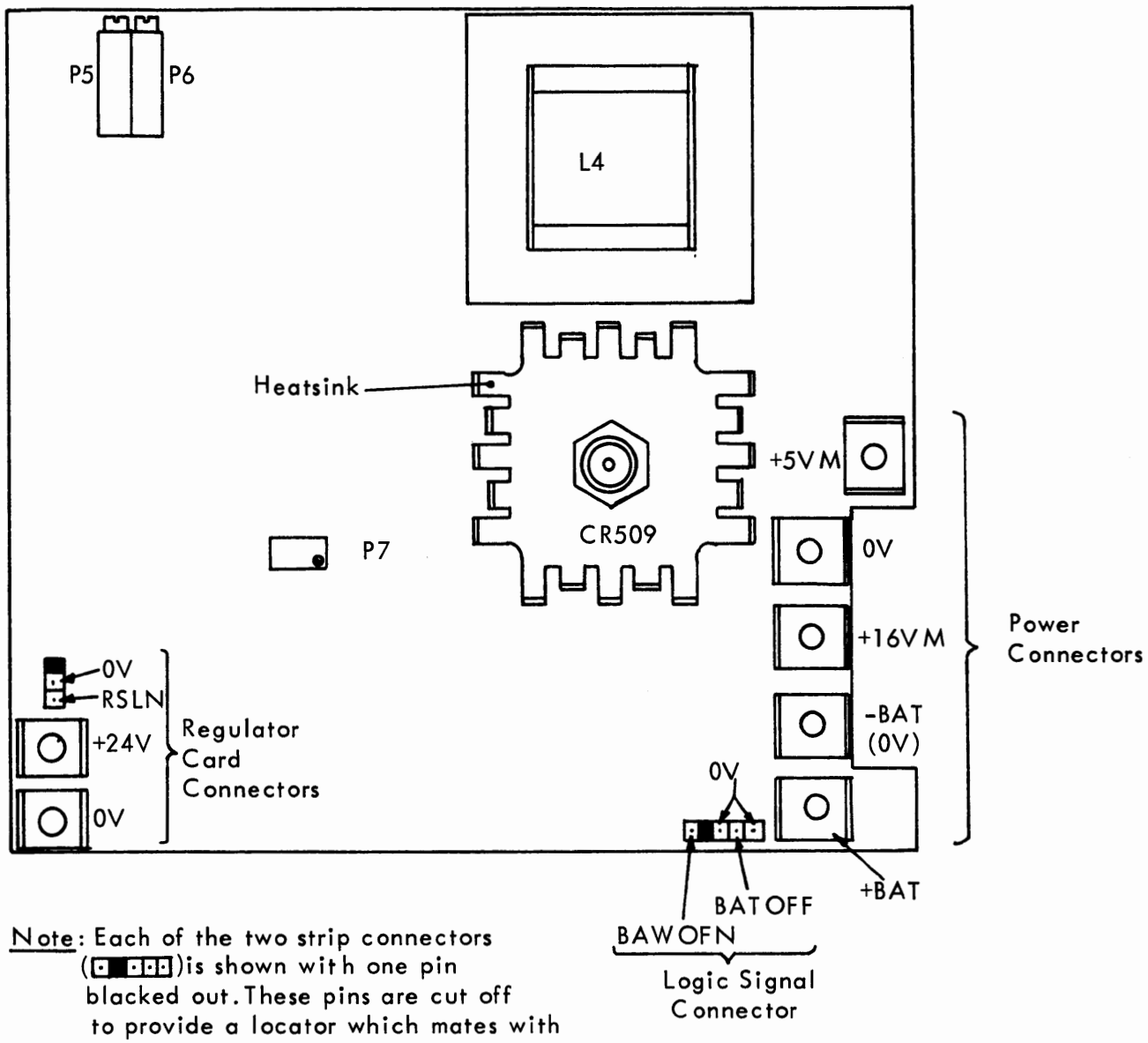

Note: Each of the two strip connectors ( )is shown with one pin blacked out. These pins are cut off to provide a locator which mates with the key way on the associated Berg flying lead connector.

Figure 1.9 M4R BATTERY CARD (OPTIONAL)

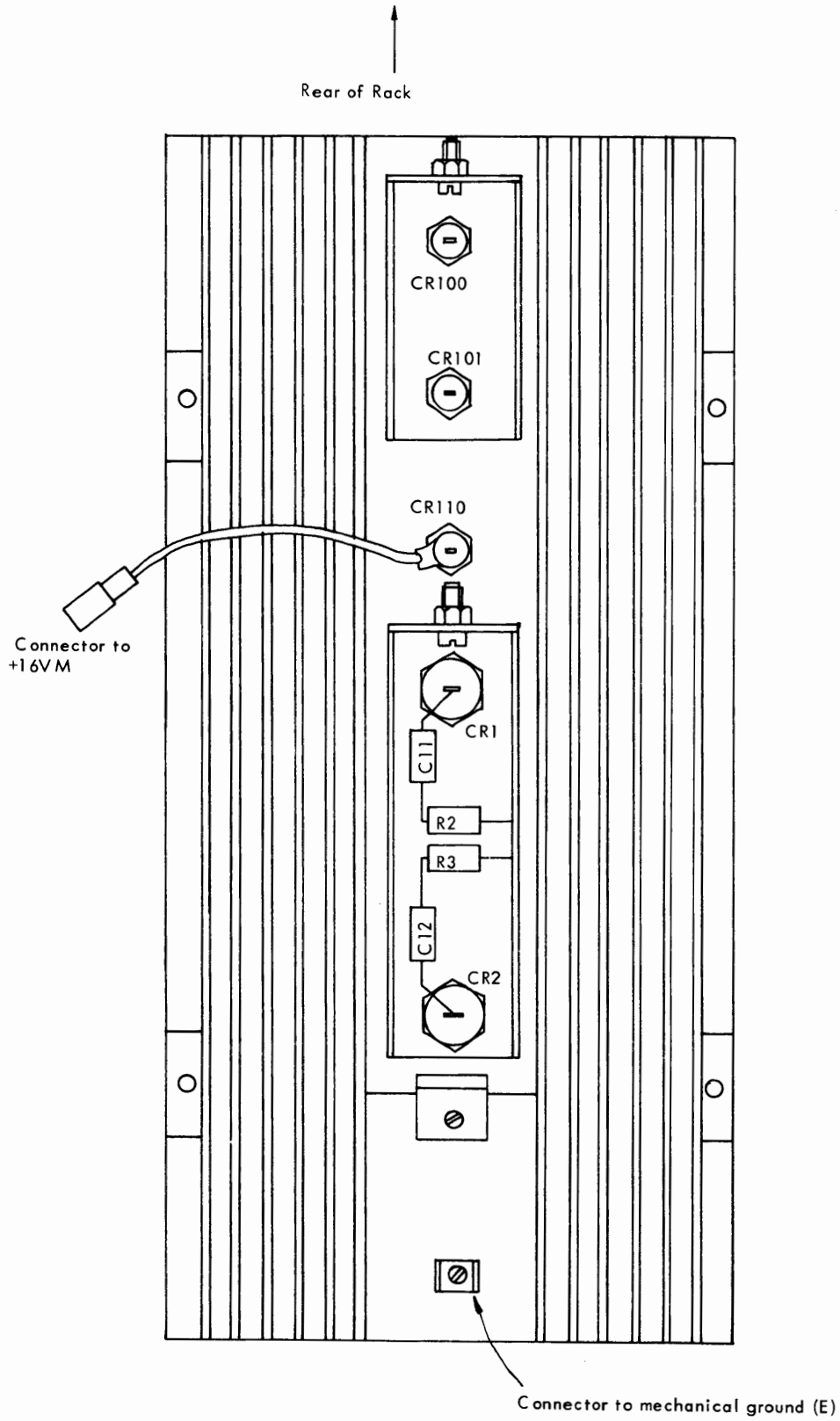

Figure 1.10 M4R HEATSINK ASSEMBLY

Connector J3 Pin No. (on back panel)	Panel Connector Pin No. (where used)	Signal	Function
3A01		+18V	Data comm. and teletype supply
3A02-5		--	--
3A06		+16VM	Memory (inhibit amps) supply
3A07		0V	Ground (logical)
3A08-16		--	--
3A17		PWFN	Power Failure Signal
3A18		0V	Ground (logical)
3A19,20	4	+5VL	Logic Supply
3A21,22		0V	Ground (logical)
3A23		--	--
3A24,25	3	0V	Ground (logical)
3A26-43		--	--
3B01		-18V	Data comm. and teletype supply
3B02		0V	Ground (mechanical)
3B03-5		--	--
3B06		+16VM	Memory (inhibit amps) supply
3B07		0V	Ground (logical)
3B08-16		--	--
3B17		RSLN	Reset Signal
3B18		-5VM	Memory Supply
3B19,20		+5VL	Logic Supply
3B21,22		0V	Ground (logical)
3B23		+5VM	Memory Supply
3B24		--	--
3B25		+16VM	Memory (inhibit amps) supply
3B26-43		--	--

Table 1.1 GP BUS CONNECTIONS (USED BY POWER SUPPLY UNIT)

Connector J5-Slot 1 (for CPU) Pin No.	Connector J5-Slot 2 (for FPP) Pin No.	Panel Connector Pin No.	Signal	Signal Source
5A01-10	--	--	--	--
5A11	5A11	--	FLOACT	CPU
5A12	5A12	--	BSYCPUN	CPU
5A13	5A13	--	GFECHT	CPU
5A14	5A14	--	DONEF	FPP
5A15	5A15	--	FLOCR1	FPP
5A16	--	--	--	--
5A17	5A17	--	OSC	CPU
5A18-29	--	--	--	--
5A30	--	1	LOCK	Panel
5A31	--	6	SDPM	Panel
5A32,33	--	--	--	--
5A34	--	2	SDMP	CPU
5A35	--	7	RTCE	Panel
5A36,37	--	--	--	--
5B01-11	--	--	--	--
5B12	5B12	--	PMFN	CPU
5B13	5B13	--	BOFFN	CPU
5B14	5B14	--	FLOCR0	FPP
5B15	5B15	--	FPPABS	FPP
5B16-19	--	--	--	--
5B20	5B20	--	PAFN	CPU
5B21,22	--	--	--	--
5B23	--	--	BAWOFN	Battery Back-Up
5B24	--	--	--	--
5B25	--	--	RTCN	Power Supply
5B26-30	--	--	--	--
5B31	--	3	0V	Power Supply
5B32,33	--	--	--	--
5B34	--	8	RESETN	CPU
5B35	--	5	+12V	CPU
5B36	--	--	--	--
5B37	--	9	-12V	CPU

Table 1.2 CONNECTIONS TO CONNECTOR J5 OF CPU (MADE IN BASIC RACK)

Connector IOM Pin No.	Signal	Function
1-21 (odd nos.)	MA	Ground for Address Lines
23,25,26,28, 29,31,32,34, 35,37,38,40, 41,43,45,47,	MC	Ground for Command Lines
49		
2	MAD04	Address/Function Lines
4	MAD03	
6	MAD08	
8	MAD09	
10	MAD10	
12	MAD11	
14	MAD12	
16	MAD13	
18	MAD14	
20	MAD15	
22	ACN	Accept Command
24	--	
27	CLEARN	Master Clear
30	TPMN	Exchange Signals: Peripheral Controller to Master
33	TMPN	Timing Signals: Master to Peripheral Controller
	TMEN	Master to External Register
39	TRMN	External Register to Master
42,44,46,48	--	Spare
50	+5V	Logic Power Supply

Connector IOB Pin No.	Signal	Function
1,3	MC	Ground for Command Lines
5-37 (odd nos.)	MB	Ground for BIO Lines
39-49 (odd nos.)	MC	Ground for Command Lines
2	RSLN	Reset from Power Supply
4	PWFN	Power Failure Signal
6-36 (even nos.)	BIO15N-BIOON	Bi-directional Data Lines
38	BIEC5	Encoded Interrupt Line (lsb)
40	SCEIN	Scan Interrupt Line
42	BIEC3	Encoded Interrupt Lines
44	BIEC4	
46	BIEC1	
48	BIEC2	
50	BIEC0	

Table 1.3 EXTENSION RACK CONNECTIONS IOM AND IOB

2 FUNCTIONAL DESCRIPTION

SECTION	2.1	GENERAL	PAGE 2-2
	2.2	POWER SUPPLIES	2-2
	2.3	POWER FAILURE AND RESET SIGNALS	2-2
	2.4	REAL TIME CLOCK SIGNAL	2-3
	2.5	BATTERY BACK-UP SYSTEM	2-3
	2.6	OPERATORS KEYSWITCH	2-4
	2.7	LED INDICATORS	2-4

LIST OF ILLUSTRATIONS

FIGURE	2.1	BLOCK DIAGRAM OF M4R POWER SUPPLY AND BATTERY BACK-UP	2-5
	2.2	TIMING OF POWER SUPPLY LOGIC SIGNALS	2-6

2.1 GENERAL

Figure 2.1 shows the main functions of the power supply and battery back-up (if fitted). The power supply is switched on with the Remote Start signal from the microswitch which is operated by the keyswitch mounted on the front of the rack. The Battery Back-Up system is controlled by signal BATOFFN which is generated by the keyswitch.

The power supply provides the following outputs:

Signal function	Signal Name at Power Supply	Signal Name at GP bus
+5V at 60A, logic supply	+5VL	+5VL
-5V at 0.8A, memory supply	-5VL	-5VM
+16V at 3A, memory supply	+16VM	+16VM
+18V (nominally +16V) at 2A, data comm. supply	+16VL	+18V
-18V (nominally -16V) at 2A, data comm. supply	-16VL	-18V
Power Failure Signal	PWFN	PWFN
Reset Signal	RSLN	RSLN
Real Time Clock Signal	RTCN	RTCN

The battery back-up system provides the following outputs:

Signal Function	Signal Name
+16V at 3A (during mains power failure only)	+16VM
+5V at 8A (during normal operation with power on or during power failure)	+5VM
"Battery was off" indication	BAWOFN

2.2 POWER SUPPLIES

Specifications for the power supplies are given in paragraph 1.3 of chapter 1 of this manual.

2.3 POWER FAILURE AND RESET SIGNALS

Signals PWFN and RSLN are generated during the power on/off sequences. Specifications for the signals are given in paragraph 1.3. Both signals are distributed to the rest of the system via the GP Bus. The timing of the signals is shown in figure 2.2. Both signals are set inactive high when the power supplies have stabilised after switch on.

The power off sequence is for normal switch off or for a mains power failure for longer than 10ms. Shorter mains failures will not cause the power off sequence. Once PWFN goes low the sequence will continue to set RSLN low. A failure in any of the +5VL, +16VL or +24V Aux supplies will also cause PWFN and RSLN to go low though the other power supplies will continue to function normally. Note: If the +16VL supply fails then the +5VL supply will also fail since this is generated from the -16VL supply. A failure in the -5VL supply (the rest of the power supply operating normally) will cause signal RSLN only to go low.
A complete description of the sequencing logic is given in chapter 3.

2.4 REAL TIME CLOCK SIGNAL

Signal RTCN is generated all the time that the mains supply is active. The signal is a train of negative pulses of 1μs duration, see paragraph 1.3.6. The signal is sent to the CPU where it is enabled by signal RTCE from the operators control panel.

2.5 BATTERY BACK-UP SYSTEM

This is an optional system which when fitted maintains the +16VM memory supply in the event of a mains power failure and generates the +5VM memory supply during normal operation or during a power failure. Note: When the battery back-up system is not fitted, the +5VM supply is derived from the +5VL supply via a wired connection.
The system comprises a battery which provides the +16VM supply during a power failure and a pcb which provides the control functions of the battery back-up system during normal operation, including the recharging of a discharged battery.
Under normal operating conditions the +16VM supply is available from the power supply. This provides the input to the +5VM power supply (see figure 2.1). The battery charger charges the battery from the +24V Aux supply. Signal RSLN is then high (inactive) and the relay operated by battery back-up control is de-energised - ie. its contact is open and the battery is isolated from the rest of the system.
When the system was initially switched on, BAWOFN was set low. When a power failure occurs RSLN goes low which resets BAWOFN high. At the same time the battery back-up control energises the relay and the battery provides the +16VM supply to the bus and to the +5VM supply. The battery back-up control then monitors the battery voltage during the power failure. If the mains supply is switched back on before the battery is discharged, BAWOFN remains high indicating to the CPU that no loss of power was experienced by the memory.

If the battery voltage drops below a critical level during the power failure the relay is de-energised (to avoid damage to the battery) and the supplies to the battery card are lost. When the mains is switched back on BAWOFN is set low again, which indicates to the CPU that the battery supply was not maintained during the power failure.

2.6 OPERATOR'S KEYSWITCH

This is a four position keyswitch on the front of the rack. The switch itself generates signal BATOFFN. When the switch is in the "OFF" position BATOFFN is low which indicates to the battery back-up control that the battery is to be isolated from the system. When the keyswitch is in either of the "ON" positions or "MAINT", BATOFFN is high and the battery back-up operates as described in paragraph 2.5. The keyswitch also operates a microswitch which generates the remote control start signal to the power supply. When the keyswitch is in either of the "ON" positions the power supply is switched on. The keyswitch thus performs the following functions:

Keyswitch position	Functions
OFF	Power Supply off, Battery Back-Up off, key can be removed from keyswitch
ON	Power Supply on, Battery Back-Up on, key cannot be removed from keyswitch
ON	Power Supply on, Battery Back-Up on, key can be removed from keyswitch
MAINT	Power Supply off, Battery Back-Up on, key cannot be removed from keyswitch (memory is maintained)

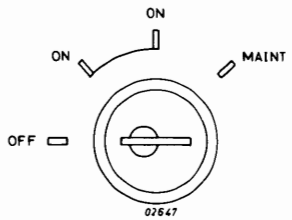

KEYSWITCH POSITIONS

2.7 LED INDICATORS

When the rack is moved forward on its telescopic slides out of the cabinet, four LED indicators can be seen (see figure 1.4). These monitor (from left to right) +16VL, -16VL, -5VL, +5VL supplies and RSLN rest signal. All four LED's should be lit for normal operation (ie. supplies active).

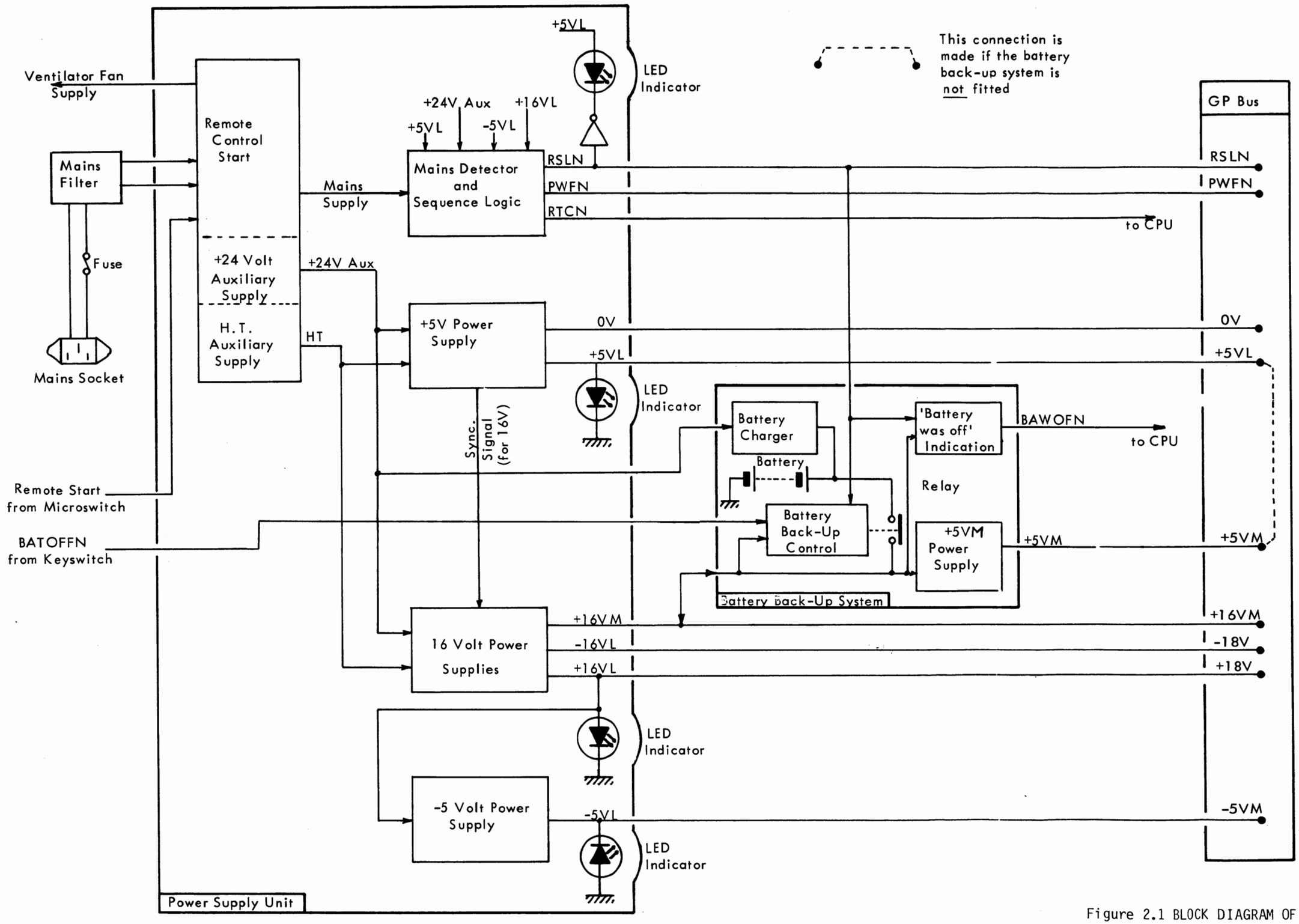

Figure 2.1 BLOCK DIAGRAM OF M4R POWER SUPPLY AND BATTERY BACK-UP

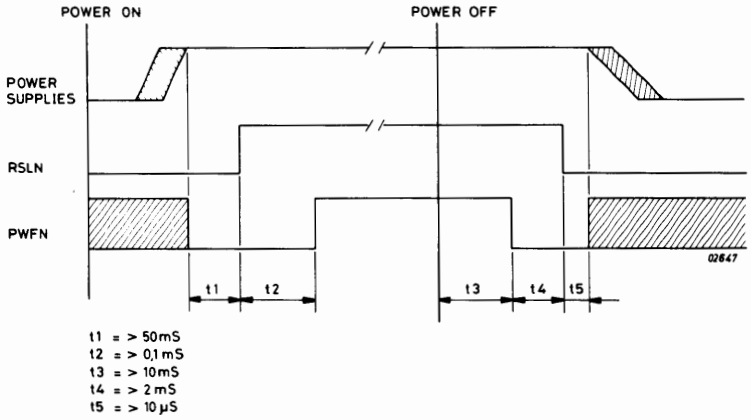

Figure 2.2 TIMING OF POWER SUPPLY LOGIC SIGNALS

3 DETAILED DESCRIPTION

SECTION	3.1	POWER SUPPLY INPUT CIRCUITS	PAGE 3-3
	3.1.1	Mains Supply	3-3
	3.1.2	Remote Start	3-3
	3.1.3	HT Auxiliary Supply	3-3
	3.1.4	+24V Auxiliary Supply	3-3
	3.2	PRINCIPLES OF OPERATION OF SWITCHED MODE POWER SUPPLY	3-4
	3.3	+5VL REGULATOR AND POWER SUPPLY	3-4
	3.3.1	Power Supply	3-4
	3.3.2	Regulator	3-4
	3.3.3	Feedback Loop	3-5
	3.3.4	Soft Start Sequence	3-5
	3.3.5	Short Circuit Protection	3-5
	3.3.6	Feedback Loop Open Circuit Protection	3-6
	3.3.7	Overcurrent Protection	3-6
	3.3.8	Supply Failure Protection	3-6
	3.3.9	Overvoltage Protection	3-6
	3.3.10	16V Synchronising Signal	3-7
	3.4	16 VOLT REGULATOR AND POWER SUPPLIES	3-7
	3.4.1	Power Supplies	3-7
	3.4.2	Regulator	3-7
	3.5	-5VM REGULATOR AND POWER SUPPLY	3-8
	3.5.1	Power Supply	3-8
	3.5.2	Regulator	3-8
	3.6	POWER SEQUENCE LOGIC	3-8
	3.6.1	Power On Sequence	3-8
	3.6.2	Power Off Sequence	3-9
	3.6.3	Real Time Clock Pulse	3-9

SECTION	3.7	BATTERY BACK-UP SYSTEM	PAGE 3-10
	3.7.1	General	3-10
	3.7.2	+5VM Regulator and Power Supply	3-10
	3.7.2.1	Power Supply	3-10
	3.7.2.2	Regulator	3-10
	3.7.3	Battery Back-Up Control	3-11
	3.7.4	Battery Charger and Control	3-11
	3.7.5	Battery Was Off Indication	3-12

LIST OF ILLUSTRATIONS

FIGURE	3.1	Basic Switched Mode Power Supply	3-13
	3.2	Operation of TDA1060 Voltage Regulator	3-14
	(a)	Soft Start Sequence	3-14
	(b)	Short Circuit/Open Circuit Protection	3-14
	(c)	Overcurrent Protection	3-14
	3.3	Timing Diagram for M4R Logic Signals	3-15
	3.4	Battery Charge Control	3-16
	3.5	Battery Was Off Indication	3-17

LIST OF TABLES

TABLE	3.1	List of Integrated Circuits Used	3-18

3.1 POWER SUPPLY INPUT CIRCUITS

3.1.1 MAINS SUPPLY (Figure 4.1)

The single phase mains supply is input to the unit via a mains socket. The supply is fused and filtered and input to the M4R Regulator Card at connectors P and N.

3.1.2 REMOTE CONTROL START (Figure 4.2)

The mains supply is switched on with the key switch. With this switch set to either of the "ON" positions a cam closes the contacts of a microswitch which puts a short circuit across connectors P and S of the regulator card. This gates on triac Q313 which energises the regulator card and provides the ventilator fans supply at connector V. The mains is supplied initially via surge limit resistor R300 to the HT Auxiliary supply circuit and to transformer TR7.

3.1.3 HT AUXILIARY SUPPLY (Figure 4.2)

When the unit is used with a mains supply of 220/240V the soldered U-links in this circuit are as shown in the diagram. Diodes CR300-303 operate as a diode bridge which rectify the mains supply. The output is smoothed by C300-303 to provide an HT supply of approximately 300V dc which is used by the +5V and +16V power supplies. When the unit is used with a mains supply of 110/115V the U-links are soldered between points b - c and e - f. In this case diodes CR300-303 and capacitors C300-303 operate as a voltage-doubler circuit. In this case the neutral of the mains supply is connected to the centre point of the network C301-303/R305,306. When the Line (P) is positive with respect to the Neutral (N) in the mains supply capacitors C300,301 are charged positively wrt the centre point via CR300,301. When P is negative wrt N capacitors C302,303 are charged negatively wrt the centre point. The total voltage developped between +HT and -HT is again approximately 300Vdc. Resistors R305,306 balance the leakage resistance of the capacitors in the network.

3.1.4 +24V AUXILIARY SUPPLY (Figure 4.2)

The primary of transformer TR7 comprises two windings. When the unit is used with 220/240V the windings are connected in series across the mains via the two soldered U-links as shown in the diagram. When used with 110/115V the U-links are soldered between points h - i and k - l in which case the two windings are connected in parallel across the mains. The secondary of TR7 at connections 8,9 is rectified and smoothed to provide the +24Vdc auxiliary supply used internally by the regulator card and by the battery card, if fitted. This supply then energises relay K1 which short circuits surge limit resistor R300.

3.2 PRINCIPLES OF OPERATION OF SWITCHED MODE POWER SUPPLY

Figure 3.1. shows the basic operation of a switched mode power supply. This type of circuit is used in the +5VL, +16VM, +16VL and -16VL supplies. A transistor switching signal generated in the regulator circuit alternately switches Q1 on and off. When Q1 is switched on current flows from the HT through winding 1 of TR1 primary, inducing a magnetic field in TR1 (figure 3.1(a). This induces an emf in TR1 secondary (figure 3.1(b). CR6 is forward biased and current flows through L1 to the load increasing linearly. Capacitor C3 is charged and energy is stored in L1.

When Q1 is switched off current stops flowing from the HT and the polarity of the voltage across winding 1 of TR1 is reversed. Thus the emf at TR1 secondary is reversed and CR6 is reversed biased. The polarity of the voltage across L1 is also reversed and the stored energy from L1 is passed to the load via forward biased CR7. At the same time C3 discharges through the load. The total load current which is the sum of the capacitor and inductor currents decreases linearly.

The collapsing magnetic field in TR1 generates a reverse emf in winding 1 which could easily destroy Q1 so winding 2 is used as a demagnetisation winding. This has the same number of turns as winding 1. When the reverse emf acros windings 1 and 2 (and hence across Q1) increases above twice the HT voltage CR4 becomes forward biased and winding 2 discharges into the capacitors of the HT supply. The slope of the increasing reverse emf is controlled by charging C1 via forward biased CR5. When Q1 is switched on again C1 discharges via R1 through Q1. Diodes CR1-3 with R4 and C3 ensure that the base of Q1 is negative with respect to the emitter when it is switched off.

3.3 +5VL REGULATOR AND POWER SUPPLY (refer to figure 4.3)

3.3.1 POWER SUPPLY

The power supply is of the switched mode type as described at paragraph 3.2 above. The output is smoothed by C1 - C6 and fed to the bus components C11/R2 across CR1 and C12/R3 across CR2 limit switching spikes in these diodes. The supply is monitored by an LED indicator CR212 which can be seen from the right hand side of the rack. The LED is lit when the supply is active.

3.3.2 REGULATOR

The power supply switching transistor Q1 is controlled by a variable duty cycle, constant frequency switching signal generated in the voltage regulator chip TDA 1060 (IC1).

The output pulses from the chip are produced by comparing an internally generated saw tooth waveform with a duty cycle voltage at the input to a pulse width modulator (PWM). The duty cycle of the output pulses increases with this voltage and the mean output voltage of the power supply increases with the duty cycle. The maximum level of duty cycle (δ max) is set by the voltage at pin 6 which is derived from an internal stabilised power supply Vz (8.5V) at pin 2 across R19/R20. During normal operation this voltage is constant and δ max is 45%. The frequency of the saw tooth generator, and hence of the output pulses, is fixed by timing components R21/C21 at 40KHz. The saw tooth waveform can be monitored at pin 8 of the chip. The pulses from the PWM are passed via an output stage to pin 15 of the chip. Pulses switch transistor Q4 which passes a constant current through the primary of TR2. When the signal at pin 15 is high (inactive) Q4 is switched on and energy is stored in TR2. When Q4 is switched off energy flows from the secondary of TR2 via R8/C16 to switch on Q1. When Q4 is switched on again the base of Q1 goes negative and switches off. The constant current source is provided by Q2,3 and 13. Transistor Q13 develops a constant voltage across R10 which passes a constant current of 200mA through Q2 to TR2 primary when switched by Q4.

3.3.3 FEEDBACK LOOP

The chip monitors, at pin 3, the output of the power supply (+5V sense) developped across potentiometer P1, compares it with an internally derived reference voltage (3.72V) at the input to an error amplifier and adjusts the duty cycle voltage accordingly. Thus P1 is used to adjust the power supply output voltage since it forms part of the feedback loop. The gain of this loop is determined by R22/R23 which are connected around the error amplifier at pin 4.

3.3.4 SOFT START SEQUENCE

Before the supply to the chip is switched on C20 connected at pin 6 is discharged. During a start up sequence after the +24V Aux supply becomes active capacitor C20 slowly charges from Vz at pin 2. Thus the duty cycle slowly increases from 0% to provide a soft start, see figure 3.2(a).

3.3.5 SHORT CIRCUIT PROTECTION

If the voltage at pin 3 becomes less than 600mV (eg. a short circuit on the power supply output) the chip internally reduces the duty cycle voltage at the PWM to a value corresponding to =10%, see figure 3.2(b). The duty cycle remains at 10% until the short circuit is removed.

3.3.6 FEEDBACK LOOP OPEN CIRCUIT PROTECTION

If the feedback loop is open circuited (ie. loss of +5V sense) the voltage at pin 3 is left floating. The chip internally simulates a high feedback voltage which reduces the duty cycle to zero (ie. no pulses). This condition is maintained until the open circuit fault is corrected, see figure 3.2(b).

3.3.7 OVERCURRENT PROTECTION

Current flow in the power supply is monitored by transformer TR3. The secondary of TR3 is half wave rectified by CR8 and applied to pin 11 of IC1 via potentiometer P2. If the voltage at pin 11 rises above 480mV the chip immediately limits current flow by cutting short the output pulse. This cycle by cycle current limit continues until the overcurrent is reduced or until the voltage at pin 11 goes higher than 600mV. At this point the chip immediately inhibits the output stage (which inhibits all pulses) and discharges capacitor C20 at pin 6. When the voltage on pin 6 is reduced to 600mV the output stage is enabled and C6 is allowed to recharge from Vz at pin 2 and the chip attempts a soft start sequence. The chip continues in this "hick-up" mode until the overcurrent condition is removed, see figure 3.2(c).

Due to its storage effect, transistor Q1 is switched on for a period of time slightly longer than the switching pulse. This means that under normal operating conditions when the voltage at pin 11 increases above480mV and the output pulse is switched off, the transistor continues to conduct and the 600mV level will be reached at pin 11. Thus any overcurrent condition will result in the "hick-up" mode. The overcurrent limit is adjusted with potentiometer P2.

3.3.8 SUPPLY FAILURE PROTECTION

If the chip input supply at pin 1 reduces below 10.5V the output stage is inhibited and capacitor C20 is discharged. The chip remains in this state until the input voltage increases above 10.5V at which time the chip commences a soft start sequence.

3.3.9 OVERVOLTAGE PROTECTION

The power supply output voltage is monitored by a Crowbar circuit mounted on the +5 Volt Filter Card. If the supply voltage increases above the specification transistor Q502 switches on and fires Thyristor Q501 which short circuits the power supply.

3.3.10 16V SYNCHRONISING SIGNAL

The sawtooth waveform at pin 8 of IC1 is compared with a fixed reference voltage at the input to comparator IC208. The square wave output at pin 1 is used as a synchronising signal for the 16V power supply.

3.4 16 VOLT REGULATOR AND POWER SUPPLIES (refer to figure 4.4)

3.4.1 POWER SUPPLIES

The power supply is of the switched mode type as described at paragraph 3.2 above. The power supply comprises a single primary circuit and two secondary circuits. The output at NS1/0 of TR4 provides the +18V (named +16VL) supply and, via diode CR110, the +16VM supply. This diode isolates the battery back-up system (if fitted), which is connected to the +16VM line, from the +18V supply during a mains failure. The output at 11/12 of TR4 provides the -18V (named -16VL) supply. The three supplies are fed to the bus via smoothing components mounted on the 16 Volt Filter Card. The +16VL supply only is monitored by LED indicator CR213 which can be seen from the right hand side of the rack and is lit if the supply is active.

3.4.2 REGULATOR

The operation of the regulator is similar to that for the +5VL supply with the following differences.

The frequency of the oscillator in the voltage regulator chip IC2 is set with components R124/C116 at approx. 50KHz. This oscillator is then synchronised with the slightly lower frequency synchronising signal from the +5VL supply. Transistor Q8 switches current from a constant current source provided by Q6,7,CR108 (200mA) via TR5. This controls switching transistor Q5 which provides the primary current for all three power supplies. The feedback signal is taken from the +16VM supply, this is therefore the best regulated of the three, via potentiometer P4 which controls the output voltage. When there is a short circuit on the +16VM the duty cycle of the switching transistor will be reduced to 10%. A short circuit on either of the other supplies will be seen by IC2 as an overcurrent. Current is monitored by TR6 which monitors the total of currents in the +16VM, +18V (+16VL), -18V (-16VL), -5VM (supplied from +16VL) and +5VM (supplied from +16VM on battery card if fitted). Overcurrent limit is adjusted, with P3, to operate when the total load current is equivalent to a current of 14A in the +16VM supply. There is no overvoltage protection on any of the supplies but Zener diode CR114 across the -16VL supply acts as a bleeder to limit the output voltage of this supply to about 20V when the supply is operating at low current.

3.5 -5VM REGULATOR AND POWER SUPPLY (see figure 4.5)

3.5.1 POWER SUPPLY

The power supply is of the switched mode type. The +16VL supply is switched with transistors Q401,402 into inductance L401. When Q401 is switched on current flows from the +16VL supply and energy is stored in L401. CR401 is reversed biased. When Q401 is switched off the energy from L401 flows into the load via CR401 which is now forward biased. The supply is smoothed by C407-409. The supply is monitored by an LED indicator CR214 which can be seen from the right hand of the rack and is lit when the supply is active.

3.5.2 REGULATOR

The operation of the regulator is similar to that of the +5VL supply with the following differences:

The feedback voltage (-5V sense) is initially compared at the input to chip IC402 with a reference voltage generated internally by the chip to produce a positive feedback signal to IC401. Power supply output voltage is adjusted with potentiometer P401. The switching signal from IC401 is applied directly to the switching transistors Q402,401. Current is monitored with TR401. Overcurrent limit is adjusted with potentiometer P402. The power supply output voltage is limited by Zener diode CR403 which starts conducting at about 6.8V.

3.6 POWER SEQUENCE LOGIC (see figure 4.2)

3.6.1 POWER ON SEQUENCE

Figure 3.3 shows the timing of logic signals during the Power On and Power Off sequences. As soon as the mains supply is switched on the +24V Aux supplies rises and the individual supplies begin to rise. The mains waveform at connectors 6 and 7 of transformer TR7 is rectified and smoothed to provide a mains detect signal which is monitored at pin 5 of IC201. It is compared with a reference voltage generated internally by the chip across potentiometer P5 and resistor R211. If the mains supply is healthy and when the +5VL supply reaches nominal, the output of IC201 at pin 9 goes high. Thus pin 4 of IC205 goes high. When the +16VL supply reaches nominal pin 5 of IC205 also goes high and signal DET goes low. This sets signal RLY high and switches on transistor Q11 in the ±5V detector circuit. If the -5VL supply is active transistor Q10 is also switched on and relay K201 is energised. This opens a contact across RSLN.

When DET goes low it triggers monostable IC202 and DELAY1 goes high and after a delay of approx. 100ns (due to R210/C216) DLY1 goes low (this delay masks the propogation time of the monostable).

At the same time DELAY1N goes low to reset signal DELAY2. The monostable produces a pulse of 1,5 seconds duration, at the end of which time DELAY1 is reset low and DEL1 goes high. After a delay of approx.100ns (due to R216/C215) DLY2 goes high, DEL2 goes low and transistor Q12 is switched off to set RSLN high. 6ms after DEL1 (due to R209/C205), PWFN also goes high.

3.6.2 POWER OFF SEQUENCE

If the mains supply is switched off the mains detect signal at pin 5 of IC201 starts to fall. After 10ms it falls sufficiently so that the comparator amplifier switches state and pin 9 of IC201 goes low. This time period is adjusted with potentiometer P5 which controls the comparator voltage at pin 4 of IC201. Also a failure in the +24V Aux or +5VL supply will cause the output of IC201 to go low. A failure in the +16VL supply will result in pin 5 of IC205 going low. Thus any of these supply failures will be detected by signal DET going high. After a delay of approx. 100ns DLY1 goes high, DEL1 goes low and PWFN goes low. DEL1 going low triggers monostable IC202 setting DELAY2 high and after a delay of approx. 100ns DLY2 goes low (this delay masks the propogation time of the monostable). The monostable produces a pulse of 3ms duration, at the end of which time DELAY2 is reset low, DEL2 goes high and transistor Q12 is switched on to set RSLN low. When DEL2 goes high, signal RLY goes low to switch off transistor Q11. Relay K201 then de-energises and its contact grounds RSLN.
Note: Since transistor Q12 operates after relay K201 for power on and before K201 for power off, contact bounce is masked from the RSLN line. A failure in the -5VL supply causes transistor Q10 to switch off. K201 de-energises and RSLN is grounded. PWFN remains high under these conditions. RSLN is monitored with an LED indicator visible from the right hand side of the rack. This LED, CR211, is lit when RSLN is high (during power on).

3.6.3 REAL TIME CLOCK PULSE

The Real Time Clock Pulse RTCN is generated by pulse shaping the mains waveform. The waveform at tap 6 of transformer TR7 is a halfwave rectified signal with a frequency equal to that of the mains. It is applied via a filter network to the input of a comparator amplifier IC207 which provides a square wave output with the same frequency. Each low to high transition of the square wave triggers the monostable IC203 which produces an output pulse of 1µs duration. This time is determined by timing components R202/C211, see figure 1.6. The output from the monostable is then inverted and output to the CPU as a twisted pair with an associated ground lead, see figure 4.1.

3.7 BATTERY BACK-UP SYSTEM (see figure 4.6)

3.7.1 GENERAL

This system provides a battery supply to maintain the +16VM supply to the memory in the event of mains power failures. The system also generates a +5VM memory supply from the +16VM supply (with mains power on or off) and provides a battery charger which charges the battery during normal operation with mains power on. When a rack is provided without this battery back-up option the +5VM supply is taken via a link from the +5VL supply, however in this case the +5VM supply (nor the +16VM supply) will not be maintained during power failure. The battery back-up system will maintain the two power supplies until the battery is discharged at which time the batttery will be isolated from the system. If this happens signal BAWOFN indicates to the CPU, when the mains supply is switched on again, that the power supplies were not maintained during the power failure.

3.7.2 +5VM REGULATOR AND POWER SUPPLY

3.7.2.1 POWER SUPPLY

The power supply is of the switched mode type. The +16VM supply is switched with transistor Q518. When Q518 is switched on CR509 is reversed biased and current flows from the +16VM supply through L4 to the load. Capacitors C501, 503-505 are charged and energy is stored in L4. When Q518 is switched off energy flows from L4 into the load via CR509 now forward biased. At the same time C501, 503-505 discharge into the load, the total load current being the sum of the capacitor and inductor currents. The current drawn from the +16VM supply is smoothed by a filter comprising C500 and inductance L5 to limit noise.

3.7.2.2 REGULATOR

The operation of the regulator is similar to that of the +5VL supply with the following differences:

The switching signal output from the voltage regulator chip IC512 switches transistor Q519 which passes current from the +16VM supply through the primary of TR9 via resistors R533/541. The secondary of TR9 drives the switching transistor Q518. The feedback signal is taken from the output of the power supply (+5VM sense) via P5 controls the output voltage. TR8 monitors the total current passes by the power supply and regulator circuits. Overcurrent limit is adjusted with P6. The power supply output voltage is limited by Zener diode CR511 which starts conducting at about 6.8V.

3.7.3 BATTERY BACK-UP CONTROL

With mains power switched on the +16VM supply is available at the battery card. The voltage developped across R500/501 is monitored by comparator amplifier IC511 at pin 3 and compared with a stabilised voltage (6,2V) across P7 at pin 2. Under normal operating conditions the level at the base of Q515 is high due to the output of IC511 but this point is held low by signal RSLN, BATOFFN from the key switch is open circuit. Transistors Q515/516 are then switched off and K502 is de-energised. If a power failure occurs RSLN goes low, the base of Q515 goes high and relay K502 is energised which connects the battery to the +16VM line. Thus the +16VM supply is maintained during the power failure. As the battery discharges its voltage falls. When the critical value is reached the output from the comparator IC511 goes low, Q515/516 switch off, K502 is de-energised and the battery is disconnected from the +16VM line. The critical value (between +12V and +13V) is adjusted with P7. When the operators key switch is in the OFF position, only, signal BATOFFN is short circuited to logical ground. The base of Q515 is then held low and relay K502 de-energised.

3.7.4 BATTERY CHARGER AND CONTROL

The battery is charged from the +24V Aux supply (while mains power is switched on). The battery voltage is monitored (Battery Voltage Sense) at pin 6 of comparator IC511 and is compared with a reference voltage (6,2V) stabilised by CR508. The comparator operates on a hysteresis loop, provided by R509, so that its output goes high or low for different battery voltages. When the +24V Aux supply is available transistors Q521/522 are switched on, these pass the charging current to the battery via CR510. Initially with a battery voltage of, say, 13V, the output from IC511 at pin 7 is high and transistors Q514/520 are switched on . Q520 passes a charging current of 25mA via R537-539, see figure 3.4. As the battery charges its voltage rises, when this reaches 17,15V (typical) IC511 switched and transistors Q514/520 are switched off. A charging current of 5mA is then passed by R518. Under these conditions the battery voltage decreases until 16,10V (typical) at which point IC511 switches back and Q514/520 are switched on again. This cycle repeats itself but slows down as full charge is reached, and eventually stabilises with Q514/520 switched off and the battery supply is maintained with the trickle charge of 5mA.

Note: Figure 3.4 is not drawn to scale. The initial switching time of the transistor is several minutes while the total charging time may be as long as 48 hours.

3.7.5 BATTERY WAS OFF INDICATION

Timer chip type NE555 (IC509) is used as a flip-flop to generate signal BAWOFN. The flip-flop has two states:

- Set (pin 3 high, BAWOFN low) when the voltage on the trigger input, pin 2, goes lower than one third of the supply voltage Vcc, pin 8.
  Note: when IC509 is switched on it is always switched on in this triggered state.
- Reset (pin 3 low, BAWOFN high) when pin 4 (Reset) goes low, ie. when signal RSLN goes low.
  Note: BAWOFN is considered as significant from the time RSLN goes high (after power on) to 5µs after PWFN goes high- this is the time when the CPU monitors BAWOFN.

When the machine is initially switched on (battery was previously off), IC509 is switched on with pin 3 high and BAWOFN low, see figure 3.5. BAWOFN remains low until the first power failure, at this time RSLN goes high providing a negative going edge which is differentiated by capacitor C510 to produce a negative pulse at the reset input, pin 4 of IC509. The output at pin 3 goes low and BAWOFN goes high. If the battery back-up is active during the power failure, ie. the supply to IC509 is maintained, BAWOFN remains high. When the power is next switched on the CPU will recognise BAWOFN high indicating that the memory supply was maintained during the power failure. If during the power failure the battery supply was switched off IC509 was also switched off and when the mains supply is next switched on IC509 will be switched on in the triggered state and the CPU will recognise BAWOFN low indicating that the memory supply was not maintained during the power failure. The chip is triggered when it is switched on because the voltage at pin 2, derived from the +16VM supply via resistor bridge R528/529 is initially less than one third of Vcc at pin 8 and which is derived from the +16VM supply via Zener diode CR500. When the +16VM supply rises to about 9V the voltage at pin 2 rises above one third of Vcc and the trigger circuit relaxes. When the chip is switched off there is also a trigger point as shown in figure 3.5, but this is masked by the trigger that follows the next switch on.

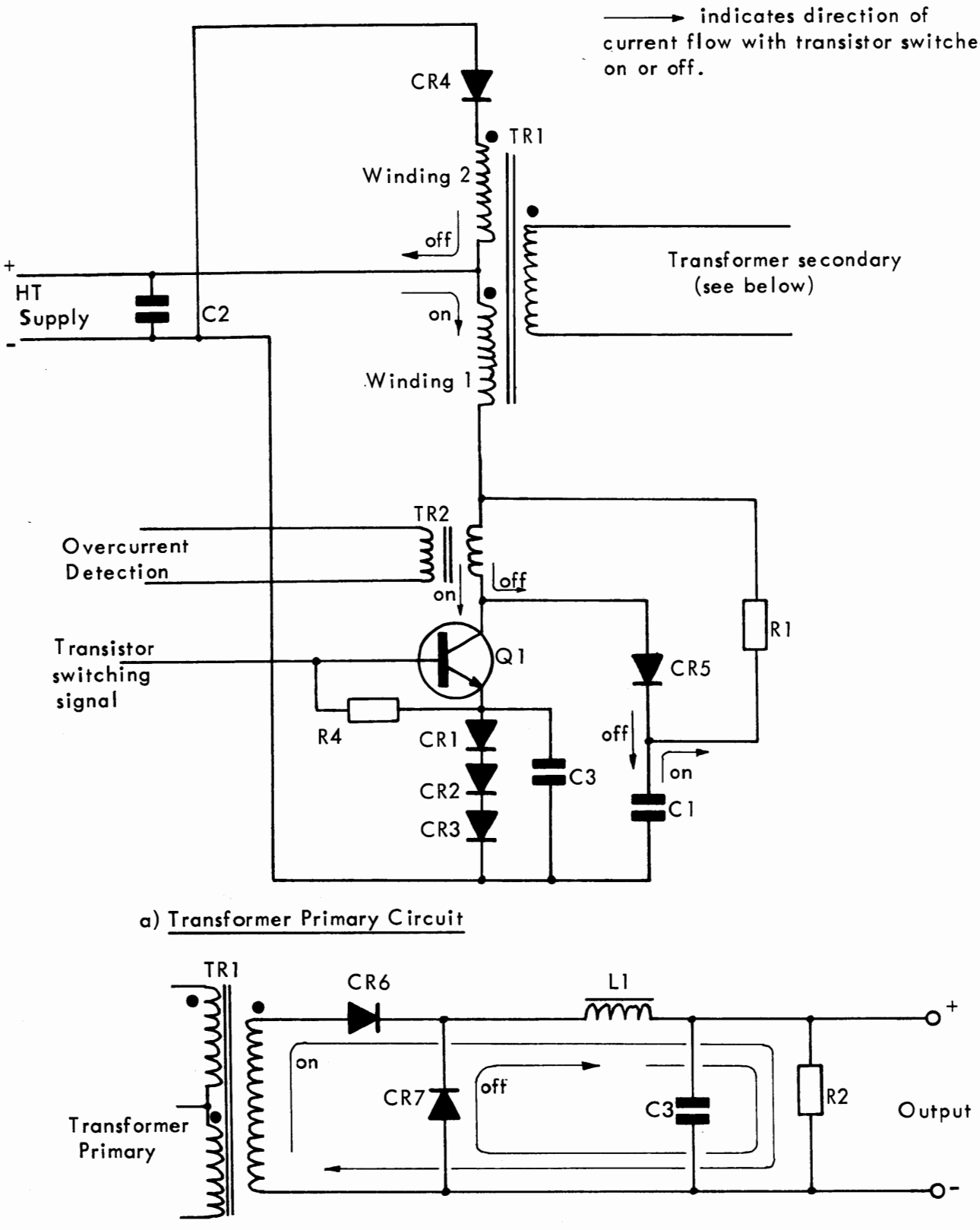

Figure 3.1 BASIC SWITCHED MODE POWER SUPPLY USING A STEP DOWN TRANSFORMER

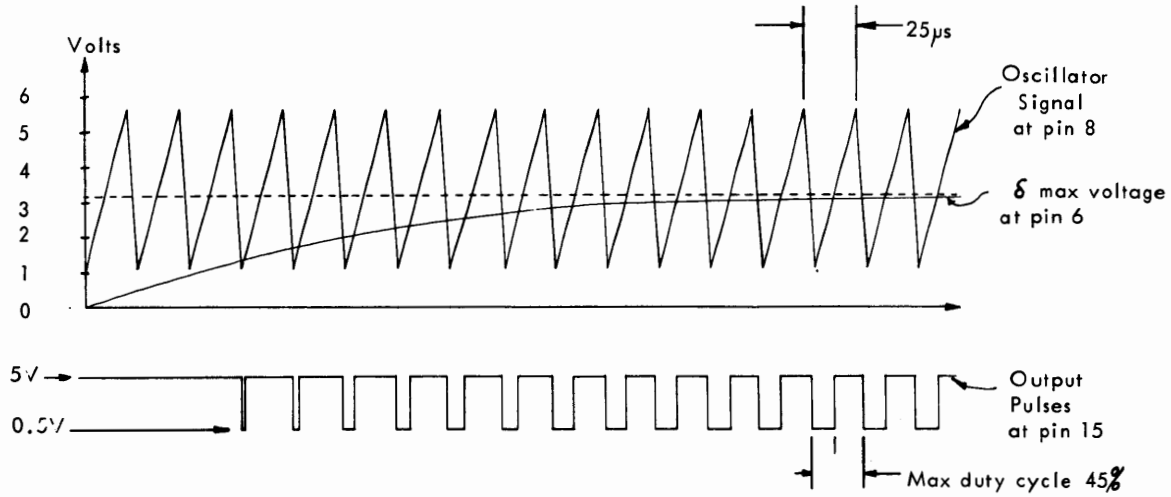

(a) : Soft Start Sequence

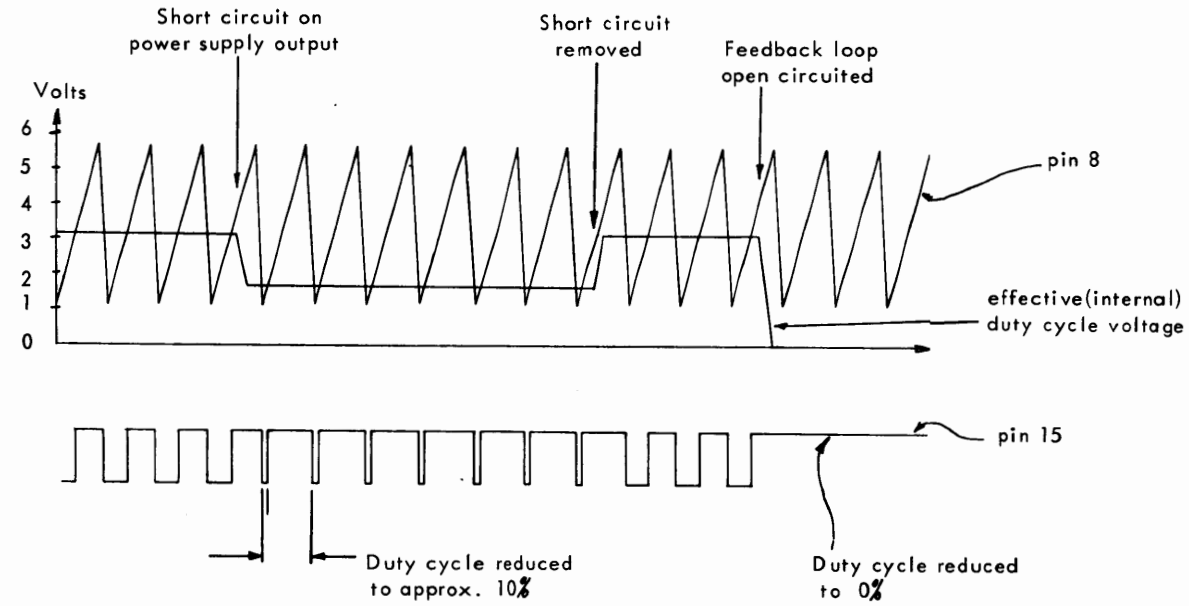

(b) : Power Supply Short Circuit and Feedback Open Circuit Protection

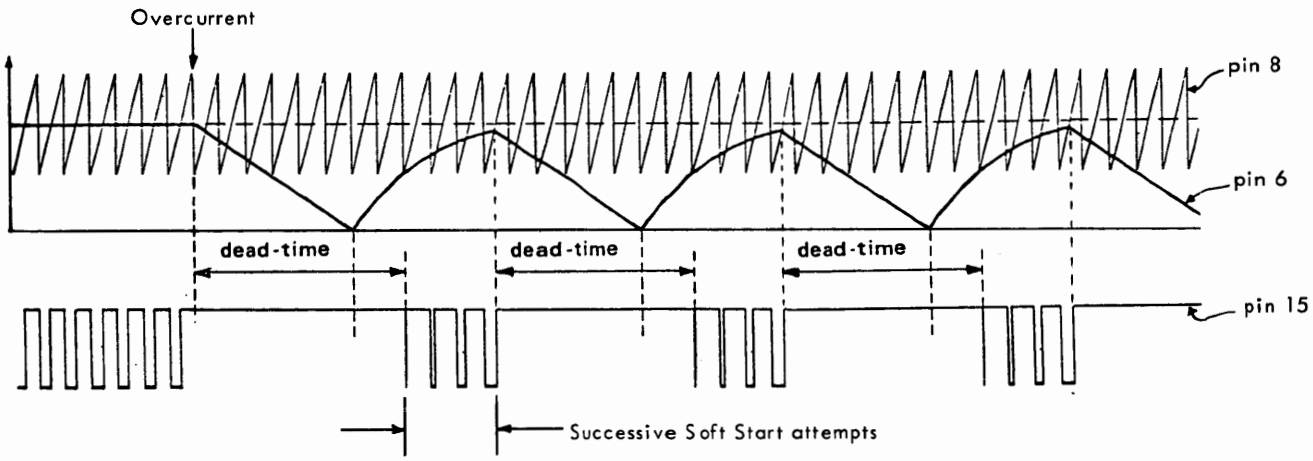

(c) : Overcurrent Protection

Figure 3.2 OPERATION OF TDA1060 VOLTAGE REGULATOR

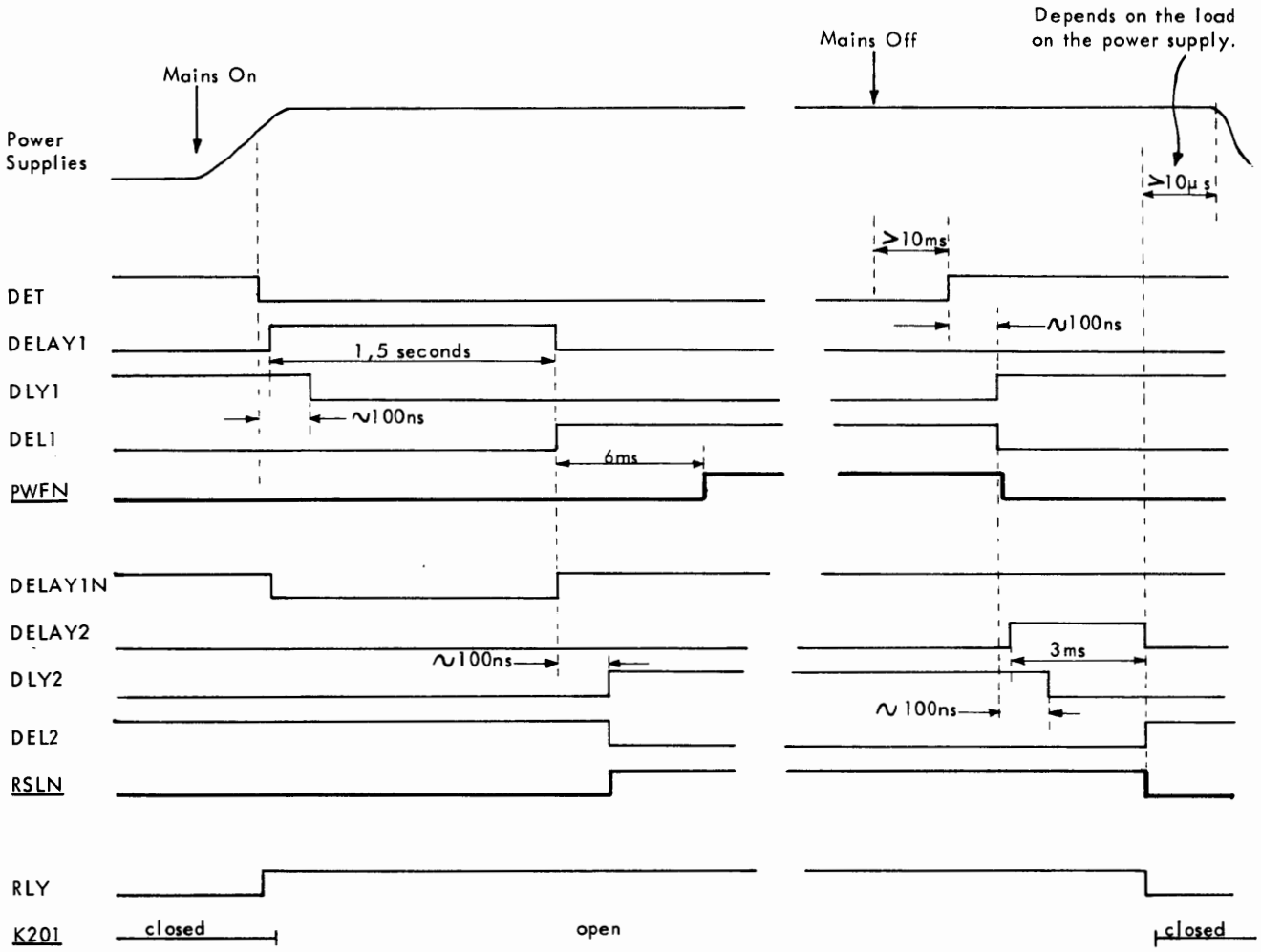

Figure 3.3 TIMING DIAGRAM FOR M4R LOGIC SIGNALS

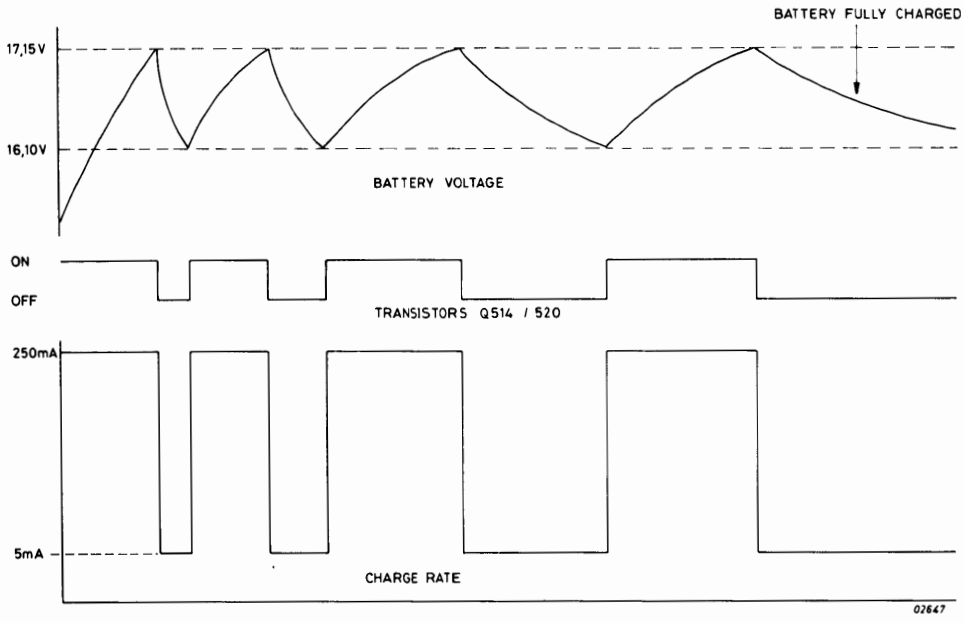

Figure 3.4 BATTERY CHARGE CONTROL

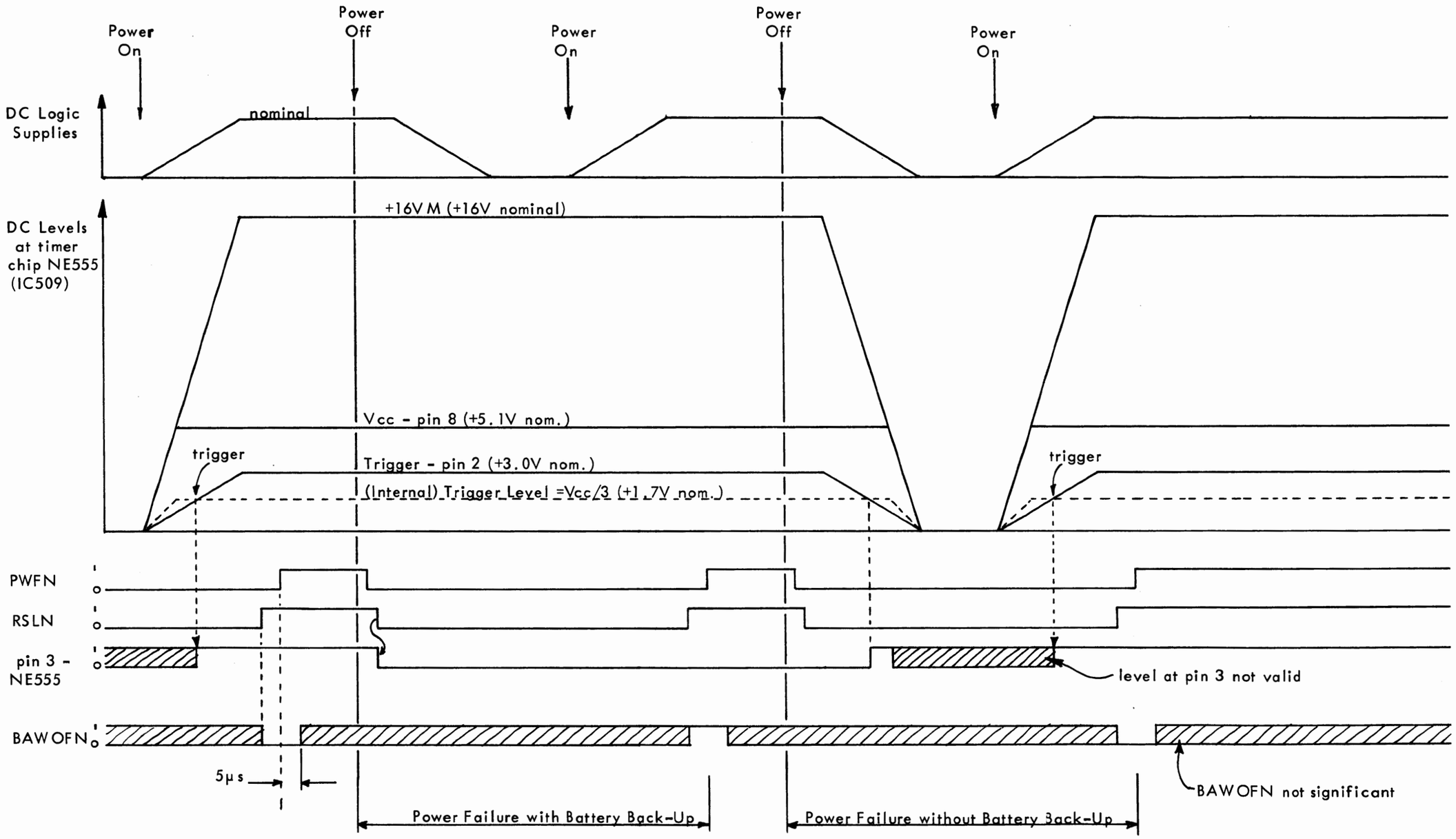

Figure 3.5 "BATTERY WAS OFF" INDICATION

Type No.	Function
TDA 1060	Power Supply Switching Controller
µA 723DC	Voltage Regulator
9602	Dual Retriggerable Monostable Multivibrator
74121	Single Monostable Multivibrator
74S38	Quadruple 2-input Positive NAND Buffers (open coll. o/p)
74132	Quadruple 2-input Positive NAND Schmitt Triggers
74S02	Quadruple 2-input Positive NOR Gates
LM393 AN	Dual Linear Amplifier
NE 555	Timer

Table 3.1 LIST OF INTEGRATED CIRCUITS USED

4 DIAGRAMS

LIST OF ILLUSTRATIONS

FIGURE	4.1	M4R RACK	: Internal Wiring	PAGE 4-2
	4.2	M4R Power Supply	: Mains Input and Sequence Logic	4-3/4
	4.3	M4R Power Supply	: +5V Regulator and Power Supply	4-5/6
	4.4	M4R Power Supply	: 16V Regulator and Power Supplies	4-7/8
	4.5	M4R Power Supply	: -5V Regulator and Power Supply	4-9/10
	4.6	M4R Battery-Back-Up		4-11

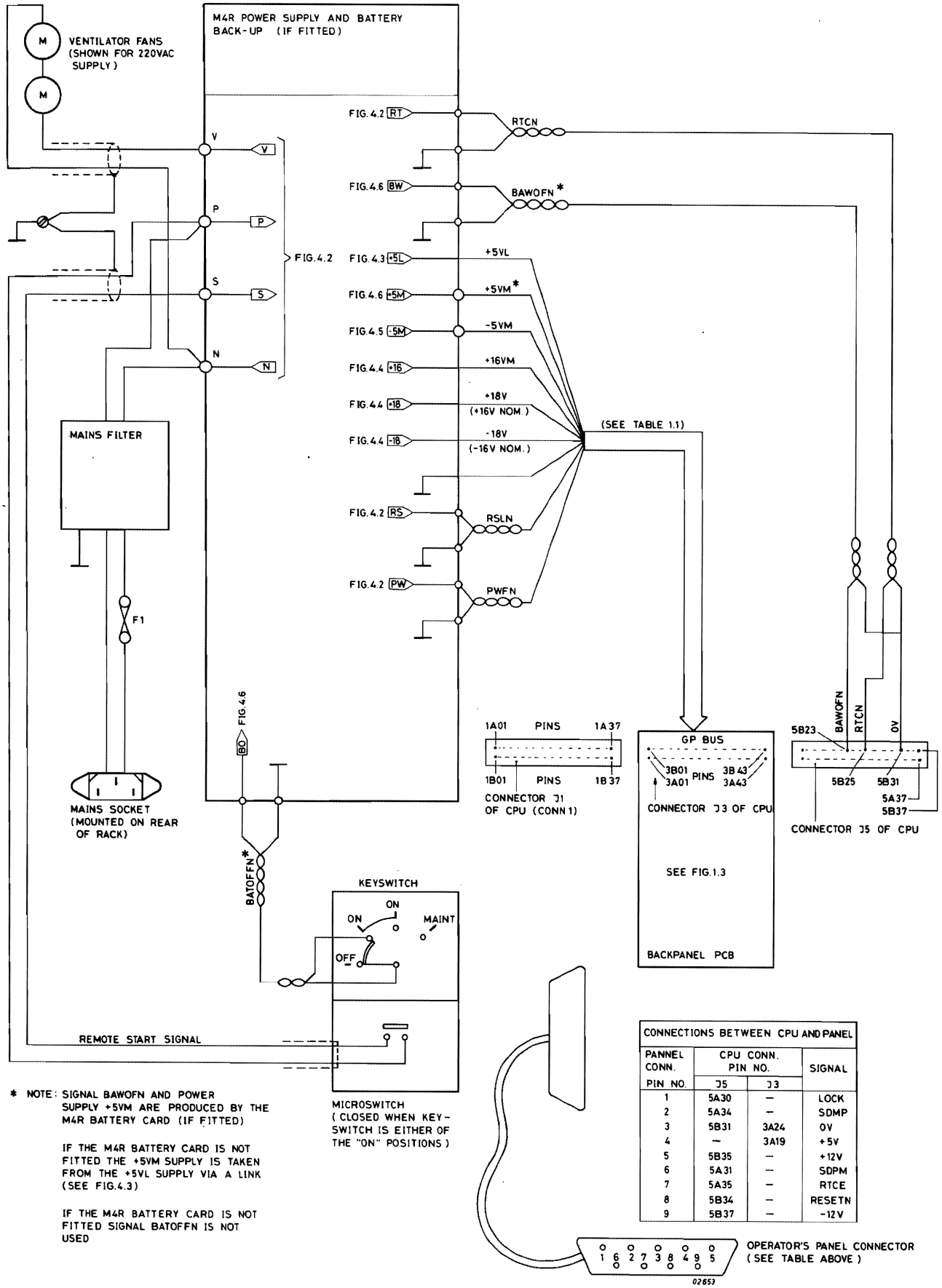

CONNECTIONS BETWEEN CPU AND PANEL			
PANNEL CONN.	CPU CONN. PIN NO.		SIGNAL
PIN NO.	J5	J3	
1	5A30	—	LOCK
2	5A34	—	SDMP
3	5B31	3A24	0V
4	—	3A19	+5V
5	5B35	—	+12V
6	5A31	—	SDPM
7	5A35	—	RTCE
8	5B34	—	RESETN
9	5B37	—	-12V

* NOTE: SIGNAL BAWOFN AND POWER SUPPLY +5VM ARE PRODUCED BY THE M4R BATTERY CARD (IF FITTED)

IF THE M4R BATTERY CARD IS NOT FITTED THE +5VM SUPPLY IS TAKEN FROM THE +5VL SUPPLY VIA A LINK (SEE FIG.4.3)

IF THE M4R BATTERY CARD IS NOT FITTED SIGNAL BATOFFN IS NOT USED

Figure 4.1 M4R RACK : INTERNAL WIRING

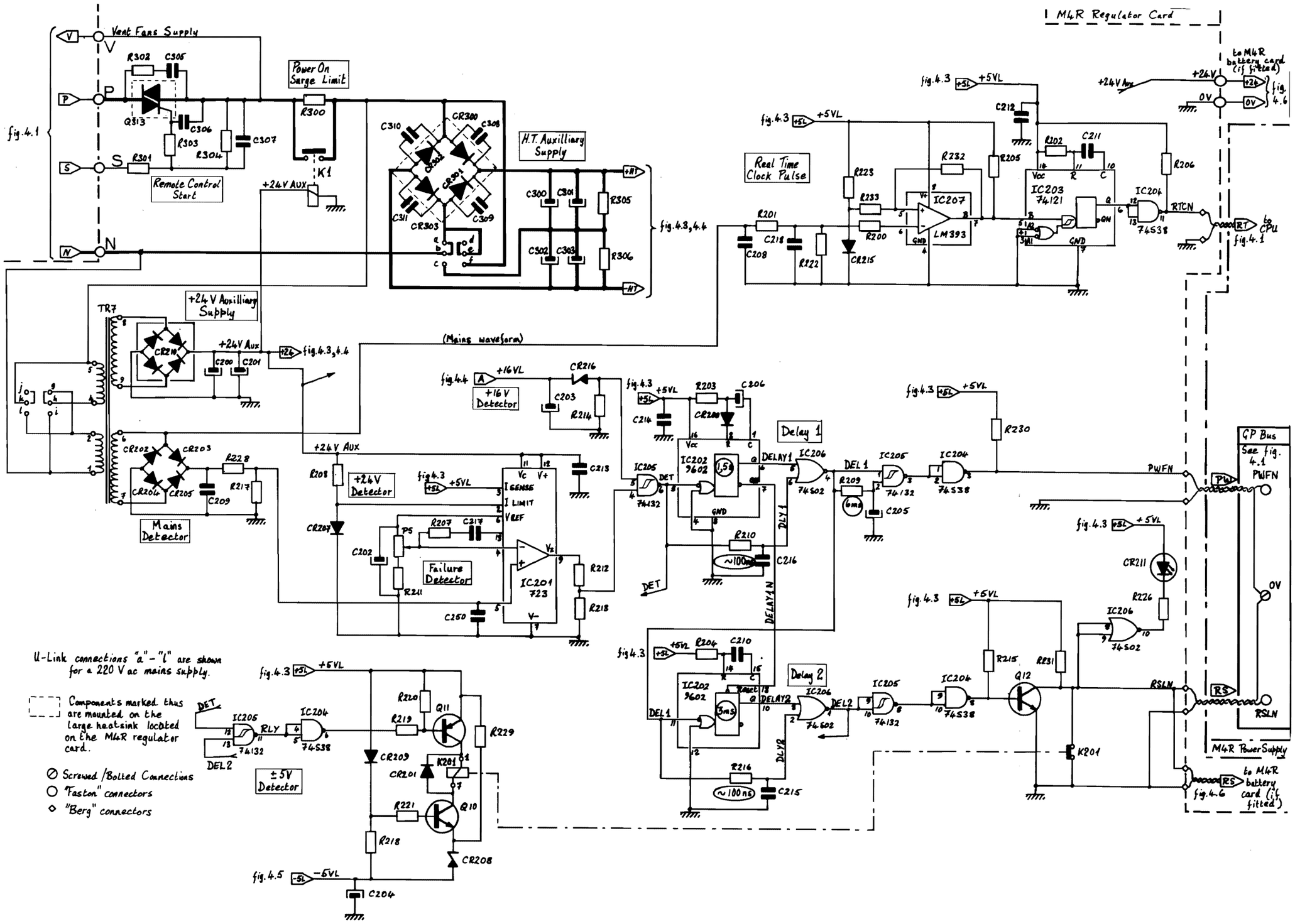

Figure 4.2 M4R POWER SUPPLY :
MAINS INPUT AND SEQUENCE LOGIC

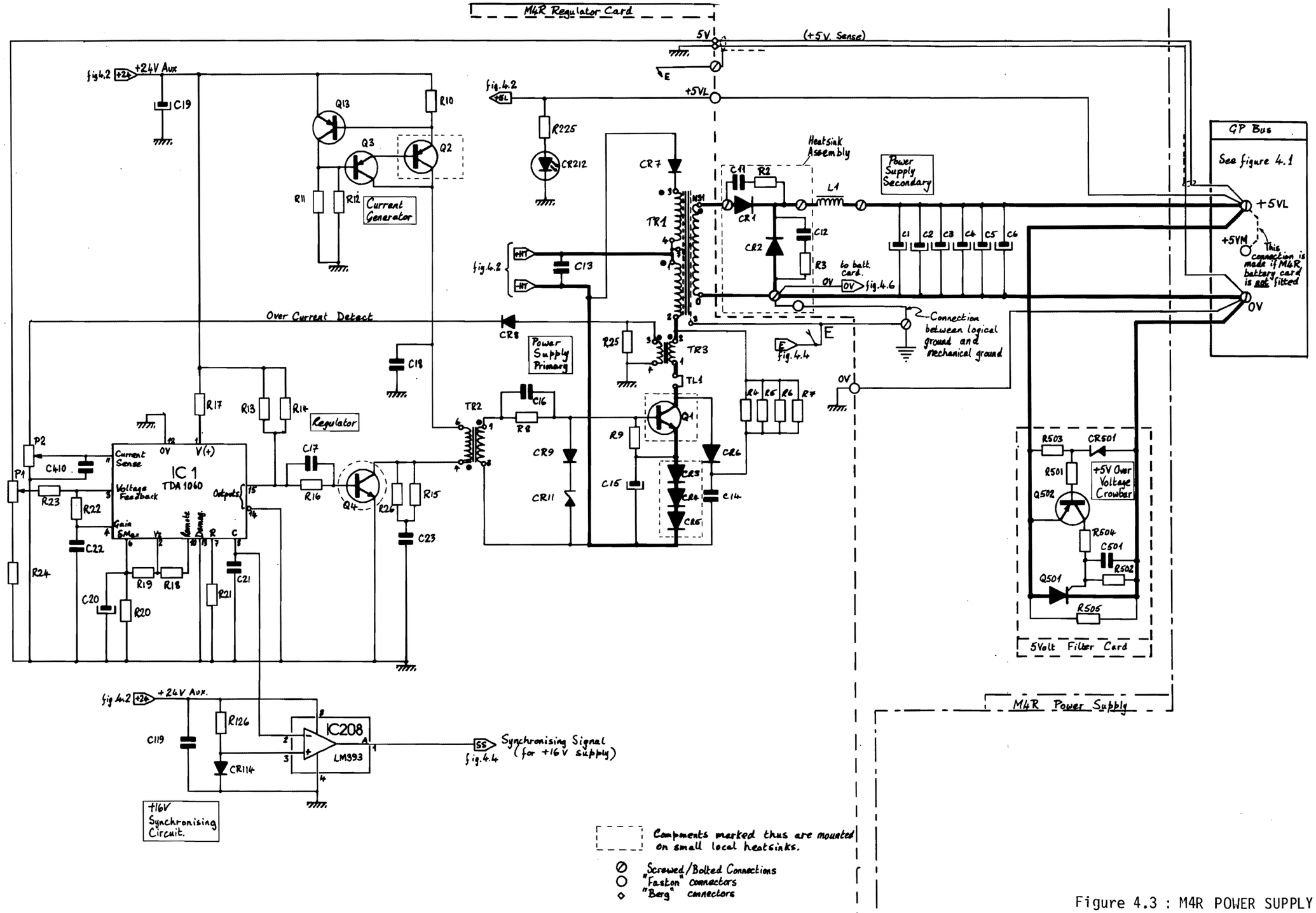

Figure 4.3 : M4R POWER SUPPLY : +5V REGULATOR AND POWER SUPPLY

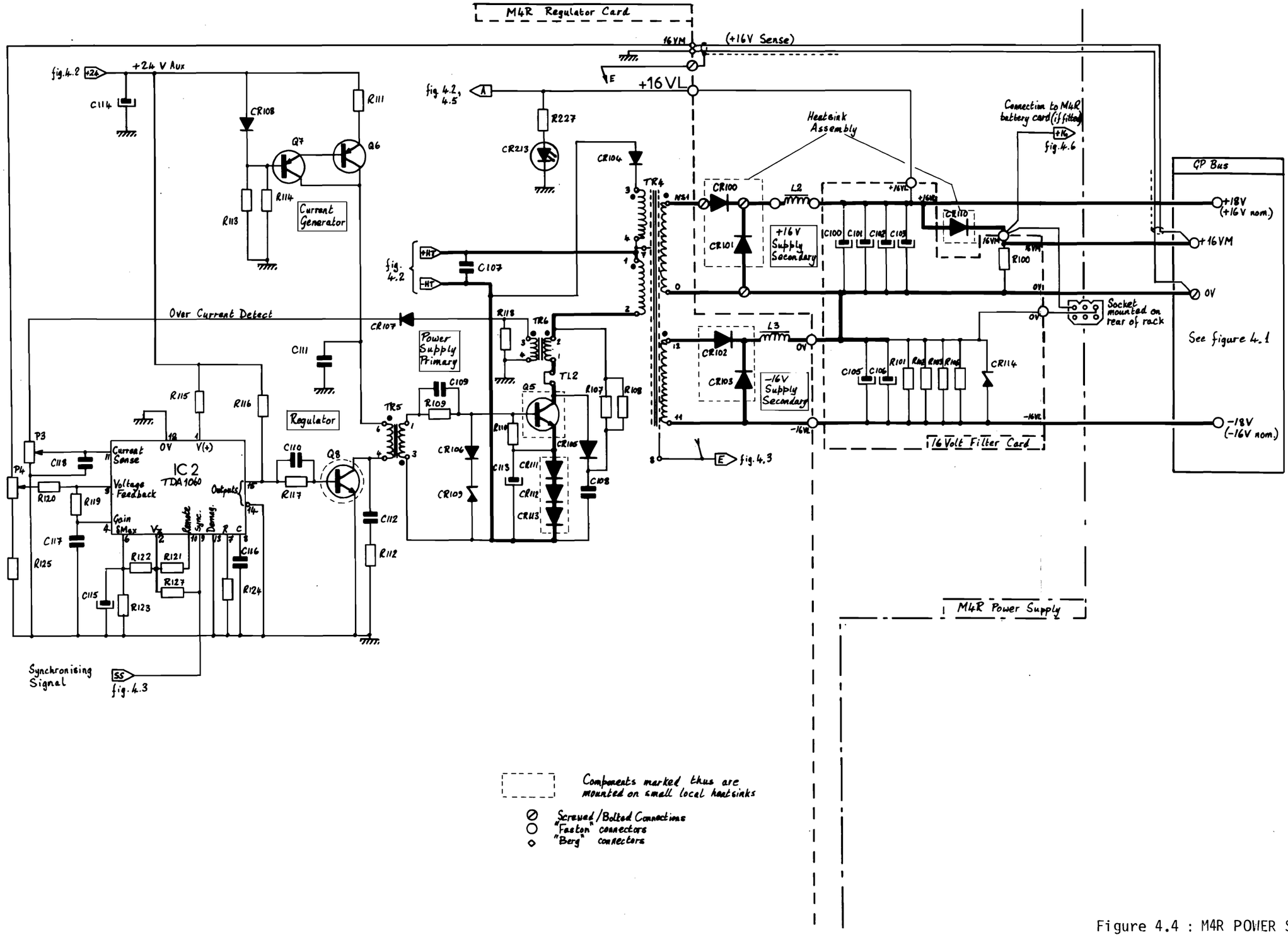

Figure 4.4 : M4R POWER SUPPLY :
16V REGULATOR AND POWER SUPPLIES

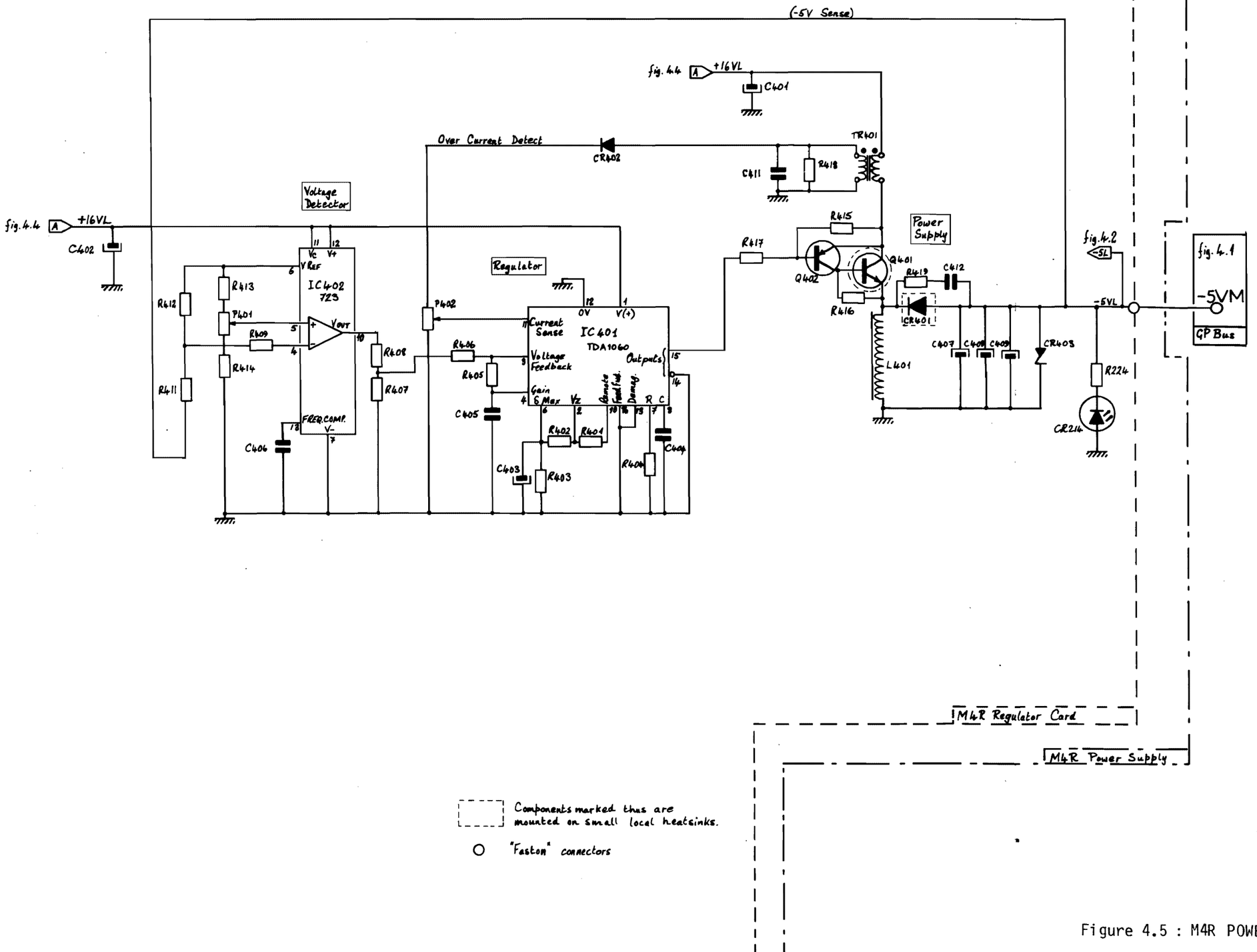

Figure 4.5 : M4R POWER SUPPLY :
-5V REGULATOR AND POWER SUPPLY

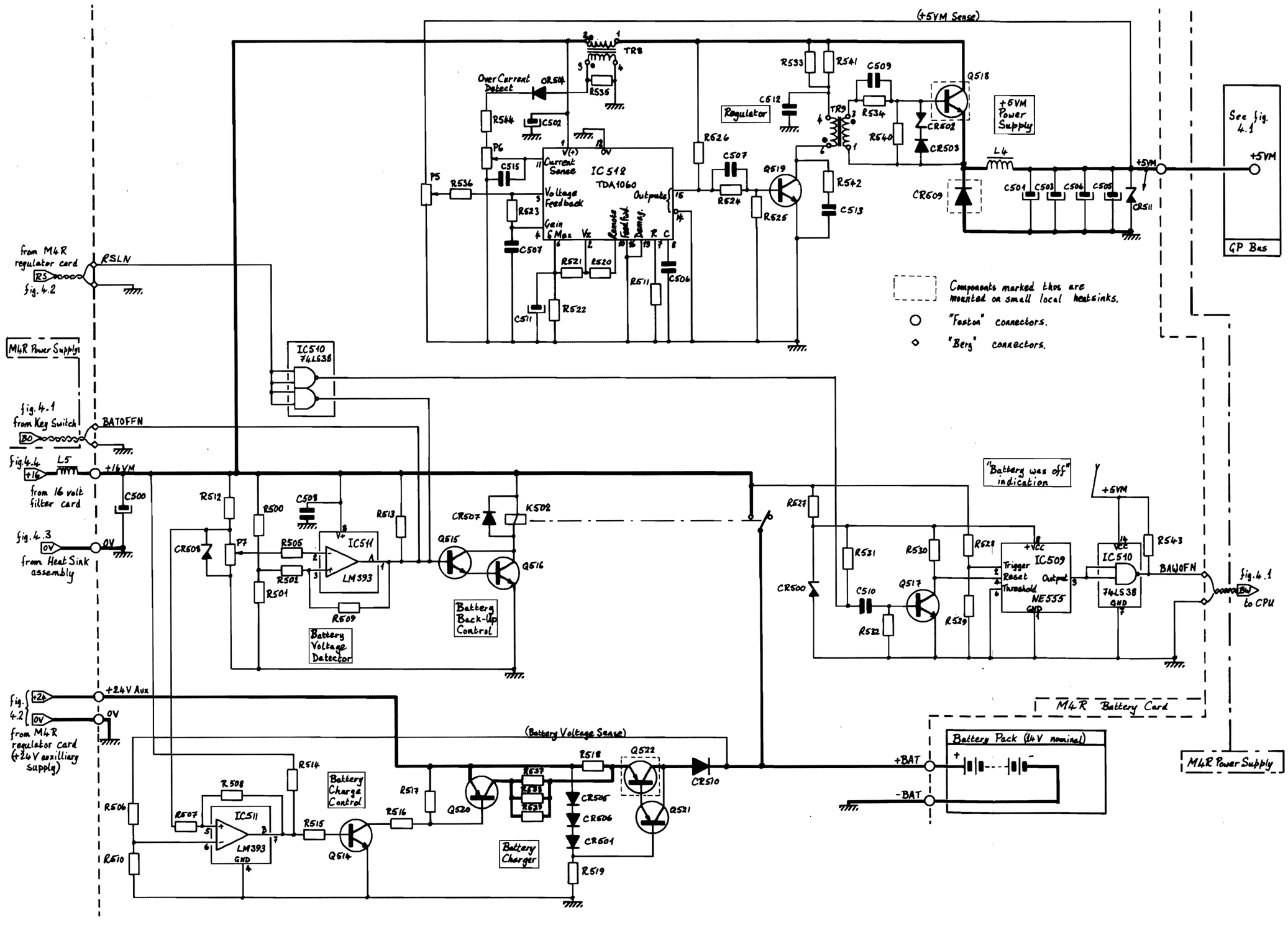

Figure 4.6 M4R BATTERY BACK-UP

174R PB5-7

6 PARTS LISTS

LIST OF ILLUSTRATIONS

FIGURE	6.1	M4R Parts List Guide	PAGE 6-3/4
	6.2	M4R Regulator Card	6-16
	6.3	M4R Heatsink Assembly	6-17
	6.4	M4R Filter Cards	6-18
	6.5	M4R Battery Card	6-19

LIST OF TABLES

TABLE	6.1	M4R Basic Mounting Box	6-5
	6.2	Vent Fan Support Assembly (115V)	6-5
	6.3	Vent Fan Support Assembly (220V)	6-6
	6.4	Filter Sub-Assembly	6-6
	6.5	FRCP Assembly	6-6
	6.6	Regulator Sub-Assembly	6-6
	6.7	M4R Battery Option	6-7
	6.8	Heatsink (equipped)	6-7
	6.9	Capacitor Assembly	6-7
	6.10	5 Volt Filter Card	6-8
	6.11	16 Volt Filter Card	6-8
	6.12	M4R Regulator Card	6-9
	6.13	M4R Battery Card	6-13

6-20
21
22
23
24

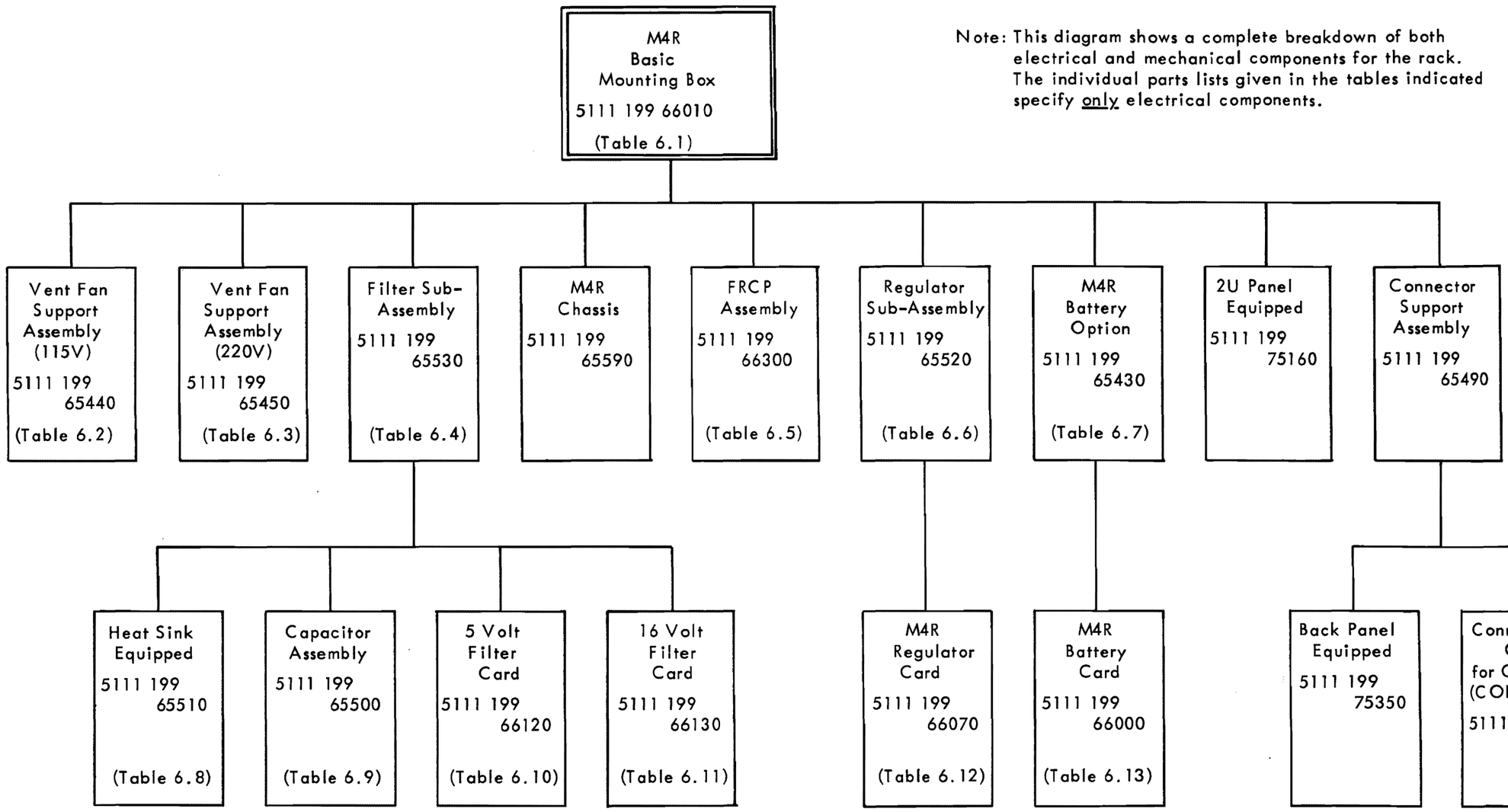

Note: This diagram shows a complete breakdown of both electrical and mechanical components for the rack. The individual parts lists given in the tables indicated specify only electrical components.

Figure 6.1 M4R PARTS LIST GUIDE

Reference	Description	12NC Code
	M4R Chassis	5111 199 65590
	Filter Sub-Assembly	5111 199 65530
	FRCP Assembly	5111 199 66300
	2U Panel, equipped	5111 199 75160
	Regulator Sub-Assembly	5111 199 65520
	Connector Support Assembly	5111 199 65490
	M4R Battery Option (optional)	5111 199 65430
	Vent Fan Support Assembly (115V) - (for 110/115V Supplies only	5111 199 65440
	Vent Fan Support Assembly (220V) - (for 220/240V Supplies only)	5111 199 65450
F1	Fuse, D8 Slow Blow 8A - (for 110/115V Supplies only	5111 199
	D8 Slow Blow 4A - (for 220/240V Supplies only	5111 199
	Mains Filter	2432 527 00039
	Key Switch	
	Micro Switch, V3 9019 M	2422 120 00073
C300-303	Capacitor, 1500µF, 200V, Felsic 018	2011 017 00072

Table 6.1 M4R BASIC MOUNTING BOX PARTS LIST - 5111 199 66010

Description	12NC Code
Ventilator Fan, 115V, 114mm diameter Note: there are two fans connected in parallel across the mains supply	5111 000 01751

Table 6.2 VENT FAN SUPPORT ASSEMBLY (115V) PARTS LIST - 5111 199 65440

Description	12NC Code
Identical to assembly for 115V except that the two fans are connected in series across the mains supply	

Table 6.3 VENT FAN SUPPORT ASSEMBLY (220V) PARTS LIST - 5111 199 65450

Reference	Description	12NC Code
	Heatsink, equipped	5111 199 65510
	Capacitor Assembly	5111 199 65500
	5 Volt Filter Card	5111 199 66120
	16 Volt Filter Card	5111 199 66130
L1	Inductance SLF 5521	5111 010 05521
L2	Inductance SLF 5541	5111 010 05541

Table 6.4 FILTER SUB-ASSEMBLY PARTS LIST - 5111 199 65530

Description	12NC Code
FRCP (Full Refreshed Control Panel)	5111 199 66310

Table 6.5 FRCP ASSEMBLY PARTS LIST - 5111 199 66300

Description	12NC Code
M4R Regulator Card	5111 199 66070

Table 6.6 REGULATOR SUB-ASSEMBLY PARTS LIST - 5111 199 65520

Reference	Description	12NC Code
	M4R Battery Card	5111 199 66000
	M4R Battery Pack	5111 010 05761
L5	Ferrite Core, violet, 23.14.7, (Philips) - wound with fife turns of the connecting lead between the 16V Filter card and the +16VM connector of the M4R Battery Card.	4322 020 97190

Table 6.7 M4R BATTERY OPTION PARTS LIST - 5111 199 65430

Reference	Description	12NC Code
CR1,2	Diode, SD51	9332 700 60682
CR100,101	Diode, BYW 31-50	9333 873 20112
CR110	Diode, SD41	9334 004 80682
C11,12	Capacitor 0.047-µF, 400v, 20%, PMA	2011 301 55652
R2,3	Resistor, RB59 - 10 Ohm.	2111 250 00138

Table 6.8 HEATSINK (EQUIPPED) PARTS LIST - 5111 199 65510

Reference	Description	12NC Code
C1 - C6	Capacitor, 1500µF, 6.3V	2222 108 33152

Table 6.9 CAPACITOR ASSEMBLY PARTS LIST - 5111 199 65500

Reference	Description	12NC Code
	Printed Circuit Card	5111 100 07521
Q501	Thyristor, BTW92/600RM	9331 678 80112
Q502	Transistor, 2N2906	9330 618 00112
CR505	Diode, BZX79 C5V6	9331 177 30112
C501	Capacitor, 0.1µF, 100V, 10%, MPR	2222 344 90002
R501	Resistor, 100 Ohm. 0.25W, 5%	2322 211 13101
R502	Resistor, 300 Ohm. 0.5W, 5%	2322 212 13301
R503	Resistor, 46.4 Ohm. 0.25W, 1%	2322 152 54649
R504	Resistor, 10 Ohm. 0.5W, 5%	2322 212 13109
R505	Resistor, 47 Ohm. RB59, 5%	2111 250 00229

Table 6.10 5 VOLT FILTER CARD PARTS LIST - 5111 199 66120

Reference	Description	12NC Code
	Printed Circuit Card	5111 100 07511
CR114	Diode, PFZ20	9335 376 60682
R100	Resistor, 470 Ohm., RB59, 5%	2111 250 00152
R101,104	Resistor, 1.5K, RB59, 5%	2111 250 00159
C100-105	Capacitor, 47µF, 25V, ALSIC	2011 031 00319

Table 6.11 16 VOLT FILTER CARD PARTS LIST - 5111 199 66130

Reference	Description	12NC Code
	Printed Circuit Card	5111 100 07532
C13,107,305	Capacitor, 0.1µF, 630V, PMA	2011 301 66403
C14	Capacitor, 4.7nF, 2000V,	2222 357 92472
C15,20,113 115,202, 205,403	Capacitor, 47µF, 10V, Fitco	2222 015 14479
C16	Capacitor, 3.3µF, 100V, MPR	2222 344 25335
C17,208,218	Capacitor, 0.1µF, 100V, MPR	2222 344 90101
C18,111	Capacitor, 0.33µF, 100V, MPR	2222 344 21334
C19,114	Capacitor, 33µF, 40V, Fitco	2222 015 17339
C21,116,404	Capacitor, 3.3nf, CRAA, 5%	2011 307 48001
C22,23,117, 212,214,250, 405	Capacitor, 10nF	2222 629 01103
C108	Capacitor, 2.2nF, 2000V	2222 357 92222
C109	Capacitor, 1µF, 100V, MPR	2222 344 21105
C110	Capacitor, 0.022µF, 250V, MPR	2222 344 41223
C112,217	Capacitor, 560pF, Cerplat	2222 630 01561
C200,201	Capacitor, 470µF, 40V, ALSIC	2222 031 00334
C203,204	Capacitor, 22µF, 25V, Fitco	2222 015 16229
C206	Capacitor, 100µF, 10V, Fitco	2222 015 14101
C209	Capacitor, 1.5µF, 100V, MPR	2222 344 21155
C210	Capacitor, 0.47µF, 40V, 1%, CKB68	2011 308 00554
C211	Capacitor, 150pF, 2%	2222 631 58151
C215,216, 406,411	Capacitor, 1nF	2222 630 01102
C306	Capacitor, 47000pF, 400V, PMA	2011 301 55852
C307,412	Capacitor, 22000pF, 400V, PMA	2011 301 55851
C308,311	Capacitor, RIFA, PME, 271Y422	2011 220 03003
C401	Capacitor, 470µF, 25V, ALSIC	2011 031 00319
C402	Capacitor, 10µF, 25V, Fitco	2222 015 16109
C407,409	Capacitor, 1000µF, 10V, ALSIC	2011 031 00336
C410	Capacitor, SR 155 C 153 KAA	2022 552 01753

Table 6.12 M4R REGULATOR CARD PARTS LIST - 5111 199 66070

Reference	Description	12NC Code
P1-5,401, 402	Potentiometer , 1K, 2600 p 102	2122 011 00019
R4-7, 107,108	Resistor, 1.8K, 5%, RB57	2111 250 30437
R8	Resistor, 2.2 Ohm. RB59	2111 250 00168
R9,110	Resistor, 47 Ohm. 0.5W, 5%	2322 212 13479
R10	Resistor, 3.3 Ohm. 0.25W, 5%	2322 211 13338
R11,12	Resistor, 2.2 K, 0.5W, 5%	2322 212 13222
R13,14,211	Resistor, 1.5K, 0.5W, 5%	2322 212 13152
R15,26,116	Resistor, 1K, 0.5W, 5%	2322 212 13102
R16,17,115	Resistor, 390 Ohm. 0.5W, 5%	2322 212 13391
R18,121	Resistor, 6.19K, 0.125W, 5%	2322 151 56192
R19,122	Resistor, Select on test (between 5.36K and 6.98K), 0.125W, 1%	2322 151 XXXXX
R20,123	Resistor, 3.48K, 0.125W, 1%	2322 151 53482
R21	Resistor, 8.25K, 0.125W, 1%	
R22	Resistor, 47K, 0.25W, 5%	2322 211 13473
R23,120,206, 230,231	Resistor, 4.7K, 0.25W, 5%	2322 211 13472
R24,25,112, 212,218,227	Resistor, 1.2K, 0.25W, 5%	2322 211 13122
R109	Resistor, 4.7 Ohm. RB59, 5%	2111 250 0065
R111	Resistor, 22 Ohm. 0.5W, 5%	2322 212 13229
R113,114	Resistor, 3.9K, 0.5W, 5%	2322 211 13392
R117	Resistor, 510 Ohm. 0.25W, 5%	2322 211 13511
R118,208,220	Resistor, 2K, 0.25W, 5%	2322 151 13202
R124	Resistor, 7.5 K, 0.125W, 1%	2322 211 57501
R125,221	Resistor, 240 Ohm. 0.25W, 5%	2322 211 13241
R126,402	Resistor, 5.1K, 0.25W, 5%	2322 211 13512
R127	Resistor, 15K, 0.25W, 5%	2322 211 13153
R200	Resistor, 12K, 0.25W, 5%	2322 151 13123
R201	Resistor, 4.22K, 0.125W, 1%	2322 151 54222
R202,404	Resistor, 9.09K, 0.125W, 1%	2322 151 59092
R203	Resistor, 31.6K, 0.125W, 1%	2322 151 53163

Table 6.12 M4R REGULATOR CARD PARTS LIST - 5111 199 66070 (CONT.)

Reference	Description	12NC Code
R204	Resistor, 19.6K, 0.125W, 1%	2322 151 51963
R205,219,229,	Resistor, 1K, 0.25W, 5%	2322 211 13102
R207	Resistor, 2.4K, 0.25W, 5%	2322 211 13242
R209,210,216, 301,302,418,	Resistor, 100 Ohm. 0.25W, 5%	2322 211 13101
R213,214, 224-226	Resistor, 330 Ohm. 0.25W, 5%	2322 211 13331
R215	Resistor, 300 Ohm. 0.25W, 5%	2322 211 13301
R217,222	Resistor, 5.11K, 0.125W, 1%	2322 151 55112
R223	Resistor, 270 Ohm. 25W, 5%	2322 211 13271
R228	Resistor, 12.1K, 0.125W, 1%	2322 151 51213
R232,233	Resistor, 24K, 0.125W, 5%	2322 211 13243
R300	Resistor, 10 Ohm. 10%, RWM 8x45	2322 250 40501
R303	Resistor, 51 Ohm. 0.25W, 5%	2322 211 13519
R304,417	Resistor, 470 Ohm. 0.25W, 5%	2322 211 13471
R305,306	Resistor, 47K, CR68	2322 214 13473
R401	Resistor, 6.2K, 0,25W, 5%	2322 211 13622
R403	Resistor, 6.8K, 0.25W, 5%	2322 211 13682
R405	Resistor, 100K, 0.25W, 5%	2322 211 13104
R406,409	Resistor, 10K, 0.25W, 5%	2322 211 13103
R407,408,414,	Resistor, 3.16K, 0.125W, 1%	2322 151 53162
R411	Resistor, 4.64K, 0.125W, 1%	2322 151 54642
R412	Resistor, 2.15K, 0.125W, 1%	2322 151 52152
R413	Resistor, 3.83K, 0.125W, 1%	2322 151 53832
R415,416	Resistor, 47 Ohm. 0.25W, 5%	2322 211 13479
R419	Resistor, 68 Ohm. 0.5W, 5%	2322 212 13689
TR1	Transformer, TR5551	5111 010 05551
TR2, 5	Transformer, AT4043.45	3122 138 90291
TR3,6	Transformer, AT4043.46	3122 138 90301
TR4	Transformer, TR5561	5111 010 05561
TR7	Transformer, TR5571	5111 010 05571
TR401	Transformer, AT4043.47	3122 138 93391

Table 6.12 M4R REGULATOR CARD PARTS LIST - 5111 199 66070 (CONT.)

Reference	Description	12NC Code
L3	Inductance, SLF2731	5111 010 02731
L401	Inductance, SLF4231	5111 010 04231
K1	Relay, Seimens, V23027, B006, A102	2422 132 05573
K201	Relay, CUPP 001B105	2422 132 05508
CR3,5	Diode, BYX 42.300R	9330 150 51112
CR4	Diode, BYX 42.300	9330 150 31112
CR6,7,104 105	Diode, BYV96D	9335 001 00112
CR8,9,106, 107,200-205, 402	Diode, BAX12A	9333 341 80112
CR11,109	Diode, BZX79 C5V1	9331 177 20112
CR102,103	Diode, BYW29.50	9333 912 70112
CR108,207-209,114,215	Diode, BZX75 C3V6	9331 321 40112
CR111-113	Diode, BYX49/300	9331 513 40112
CR208	Diode, BZX79 C4V7	9331 177 10112
CR210	Diode, Bridge, BY164	9330 873 30112
CR211-214	Diode, CQY24	9332 788 80112
CR216	Diode, BZX79 C12	9331 178 10112
CR300,301	Diode, BYX99/600	9332 619 40112
CR302,303	Diode, BYX99/600R	9332 619 50112
CR401	Diode, BYW31.50	9333 873 20112
CR403	Diode, PFZ 6.8	9334 640 10112
Q1,5	Transistor, BUX81	9332 715 30112
Q2,6	Transistor, BDX78	9332 306 10112
Q3,7,402	Transistor, 2N2905A	9330 359 60112
Q4	Transistor, BUY47	9331 737 10112
Q8	Transistor, BDX 77	9332 306 00112
Q10	Transistor, 2N4400	9334 639 90112
Q11,13	Transistor, 2N4402	9334 640 00112
Q12	Transistor, BSX60	9330 283 50112

Table 6.12 M4R REGULATOR CARD PARTS LIST - 5111 199 66070 (CONT.)

Reference	Description	12NC Code
Q313	Triac, BTX94H.800	9334 227 90112
Q401	Transistor, BDX35	9331 849 30112
IC2,401	Integrated Circuit, TDA 1060	9333 347 60112
IC201,402	Integrated Circuit, µA 723DC	9331 713 51112
IC202	Integrated Circuit, 9602	5111 000 00571
IC203	Integrated Circuit, 74121	5111 000 00291
IC204	Integrated Circuit, 74S38	5111 000 04291
IC205	Integrated Circuit, 74132	5111 000 00741
IC206	Integrated Circuit, 74S02	5111 000 02241
IC207,208	Integrated Circuit, LM393 N	5111 000 05461

Table 6.12 M4R REGULATOR CARD PARTS LIST - 5111 199 66070 (CONT.)

Reference	Description	12NC Code
	Printed Circuit Card	5111 100 07542
IC509	Integrated Circuit, NE555	5111 000 02471
IC510	Integrated Circuit, 74S38	5111 000 04291
IC511	Integrated Circuit, LM393 N	5111 000 05461
IC512	Integrated Circuit, TDA1060	9333 347 60112
Q514-517	Transistor, 2N4400, Style 1	9334 639 90112
Q518	Transistor, 2N5302	9331 119 90682
Q519	Transistor. BDX35	9331 849 30112
Q520,521	Transistor, 2N2905	9330 226 40112
Q522	Transistor, BDX78	9332 306 10112
CR500,502	Diode, BZX79 C5V1	9331 177 20112
CR501	Diode, BZX75 C3V6	9331 321 40112
CR503-507	Diode, BAX12A	9333 341 80112
CR508	Diode, 1N823	9331 119 40112
CR509	Diode, BYW 30/50	9333 872 90112
CR510	Diode, 1N4005	9331 190 60112
CR511	Diode, PFZ 6.8	9334 640 10112

Table 6.13 M4R BATTERY CARD PARTS LIST - 5111 199 66000

Reference	Description	12NC Code
K502	Relay, KSNV23016 B0005 A101	2422 132 01442
R500	Resistor, 383 Ohm. 0.125W, 1%	2322 151 53831
R501	Resistor, 1.21K, 0.125W, 1%	2322 151 51212
R502	Resistor, 8.25K, 0.125W, 1%	2322 151 58252
R505	Resistor, 1.62K, 0.125W, 1%	2322 151 51622
R507	Resistor, 19.6K, 0.125W, 1%	2322 151 51963
R506	Resistor, 100K, 0.125W, 1%	2322 151 51004
R508,9	Resistor, 5.11K, 0.125W, 1%	2322 151 55112
R510	Resistor, 42.2K, 0.125W, 1%	2322 151 54223
R511	Resistor, 9.09K, 0.125W, 1%	2322 151 59092
R512.525,526	Resistor, 1.2K, 0.25W, 5%	2322 211 13122
R513	Resistor, 10K, 0.25W, 5%	2322 211 13103
R514	Resistor, 7.5K, 0.25W, 5%	2322 211 13752
R515-517,529 531,532	Resistor, 1K, 0.25W, 5%	2322 211 13102
R518	Resistor, 680 Ohm. 0.25W, 5%	2322 211 13681
R519	Resistor, 1.8K, 0.25W, 5%	2322 211 13182
R520	Resistor, 6.2K, 0.25W, 5%	2322 211 13622
R521,536	Resistor, 5.1K, 0.25W, 5%	2322 211 13512
R522,543	Resistor, 6.8K, 0.25W, 5%	2322 211 13682
R523	Resistor, 47K, 0.25W, 5%	2322 211 13473
R524	Resistor, 330 Ohm. 0.25W, 5%	2322 211 13331
R527	Resistor, 620 Ohm. 0.5W, 5%	2322 212 13621
R528	Resistor, 4.3K, 0.25W, 5%	2322 211 13432
R530	Resistor, 20K, 0.25W, 5%	2322 211 13203
R533,541	Resistor, 100 Ohm. RB59	2111 250 00136
R534	Resistor, 2.2 Ohm. B59R	2111 250 00168
R535	Resistor, 68 Ohm. 0.25W, 5%	2322 211 13689
R537-539	Resistor, 43 Ohm. 0.5W, 5%	2322 212 13439
R540	Resistor, 100 Ohm. 0.25W, 5%	2322 211 13101
R542	Resistor, 330 Ohm. 0.5W, 5%	2322 212 13331
R544	Resistor, 2K, 0.25W, 5%	2322 211 13202
P5,6	Potentiometer, 1k, 2600P. 102	2122 011 00019
P7	Potentiometer, 50K, type 64W	2122 362 00436

Table 6.13 M4R BATTERY CARD PARTS LIST - 5111 199 66000

Reference	Description	12NC Code
TR8	Transformer, AT4043.47	3122 138 93391
TR9	Transformer, AT4043.48	3122 138 90581
L4	Inductor, SLF 5531	5111 010 05531
C500	Capacitor, 1000µF, 25V, Alsic	2011 031 00336
C501,503-505	Capacitor, 1000µF, 10V, Alsic	2011 031 00309
C502	Capacitor, 10- F, 25V, Fitco	2222 015 16109
C506	Capacitor, 3.3nF, 5%, CRAA	2011 307 48001
C507,510 513,515	Capacitor, 10nF, Cerplat	2222 629 01103
C508	Capacitor, 0.1µF, 100V, MPR	2222 344 90101
C509	Capacitor, 1µF, MPR	2222 344 21105
C511	Capacitor, 47µF, 10V, Fitco	2222 015 14479
C512	Capacitor, 0.22µF, MPR	2222 344 21224
C514	Capacitor, 3.9nF, Cerplat	2222 630 01392

Table 6.13 M4R BATTERY CARD PARTS LIST - 5111 199 66000 (CONT.)

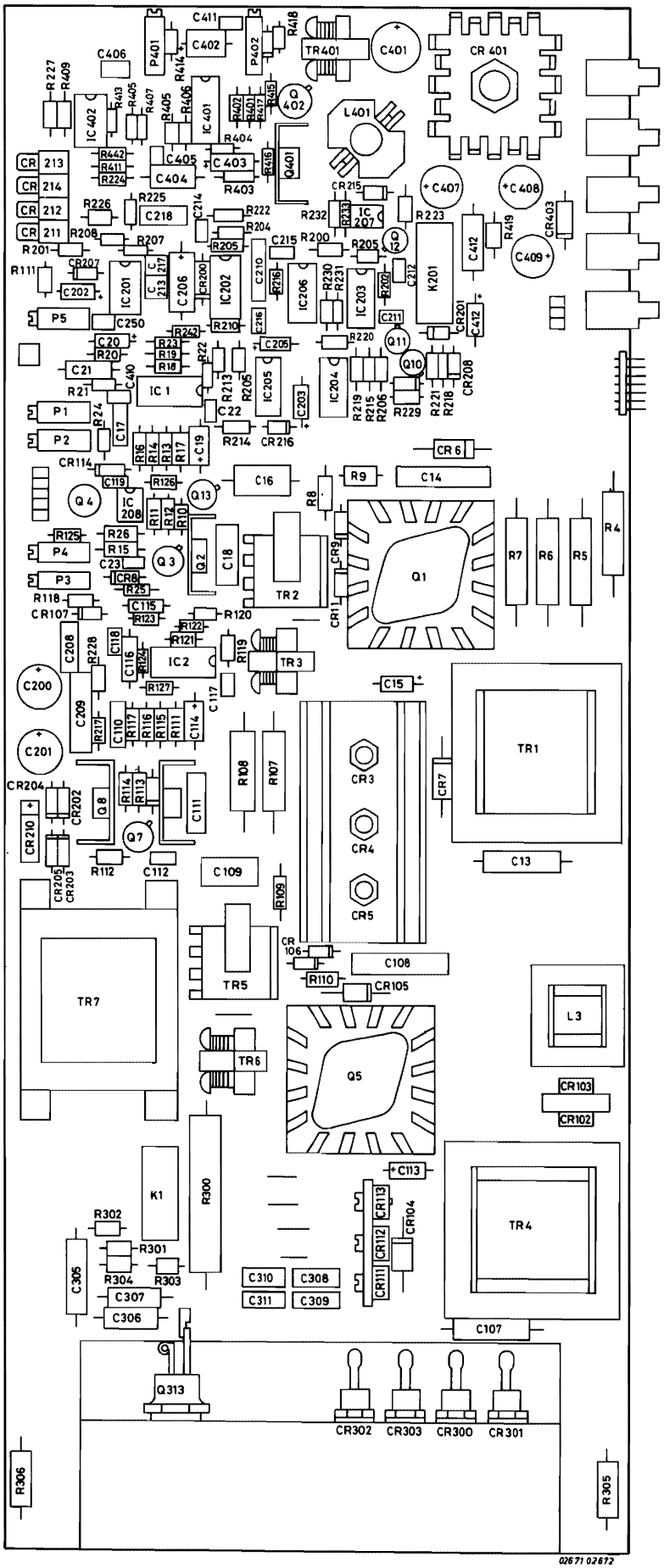

Figure 6.2 M4R REGULATOR CARD

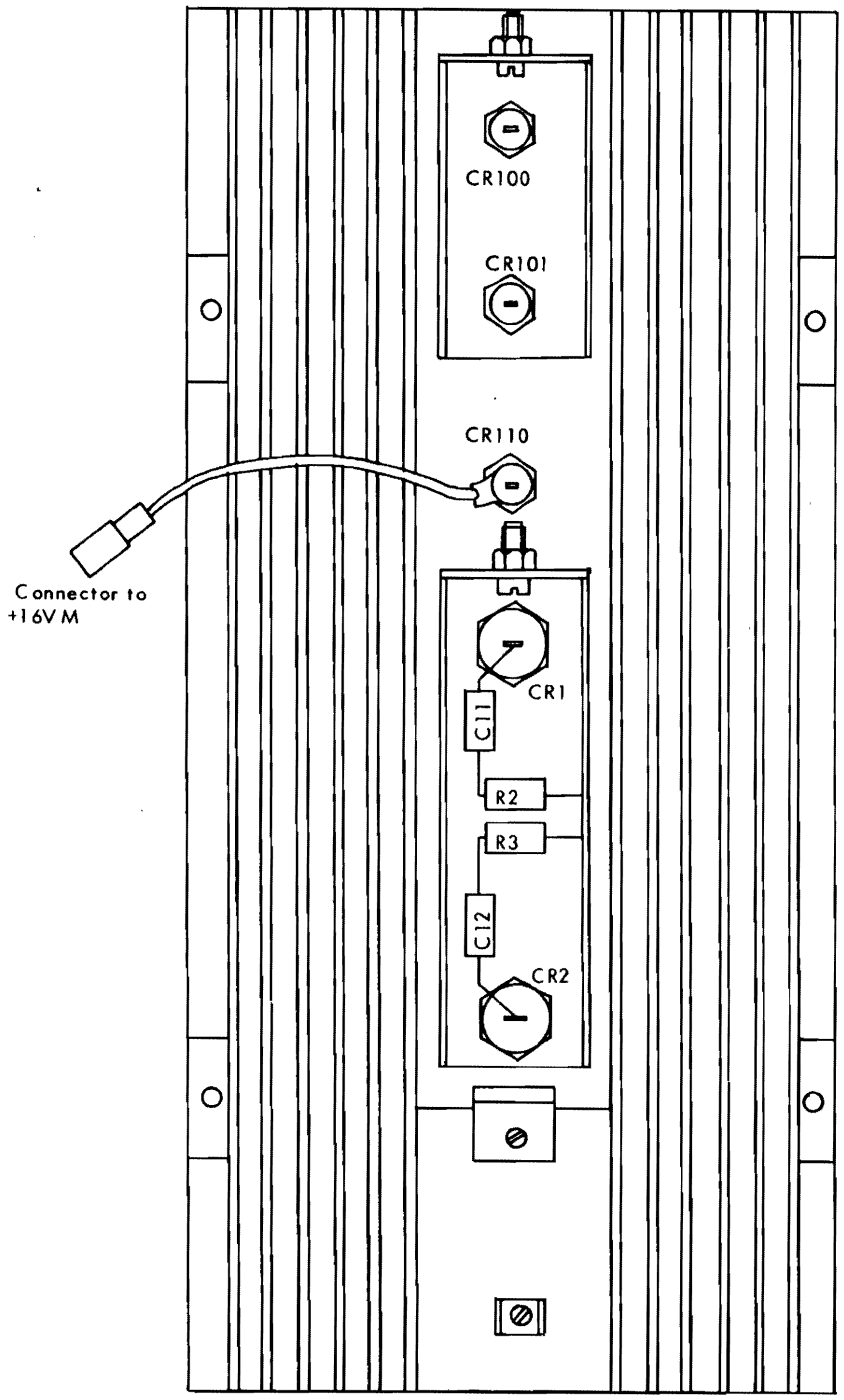

Figure 6.3 M4R HEATSINK ASSEMBLY

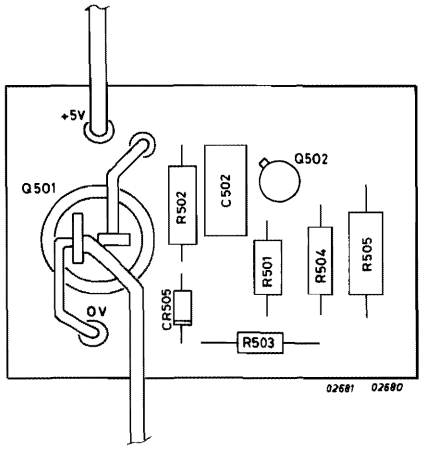

(a) 5 VOLT FILTER CARD

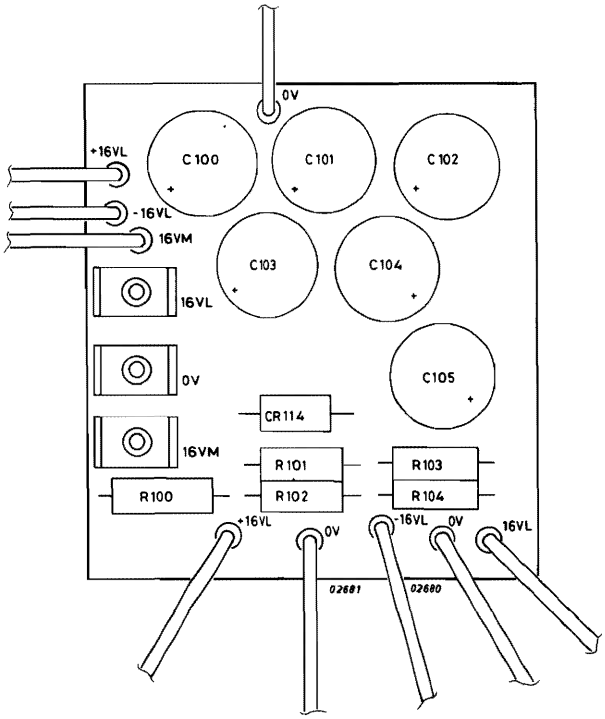

(b) 16 VOLT FILTER CARD

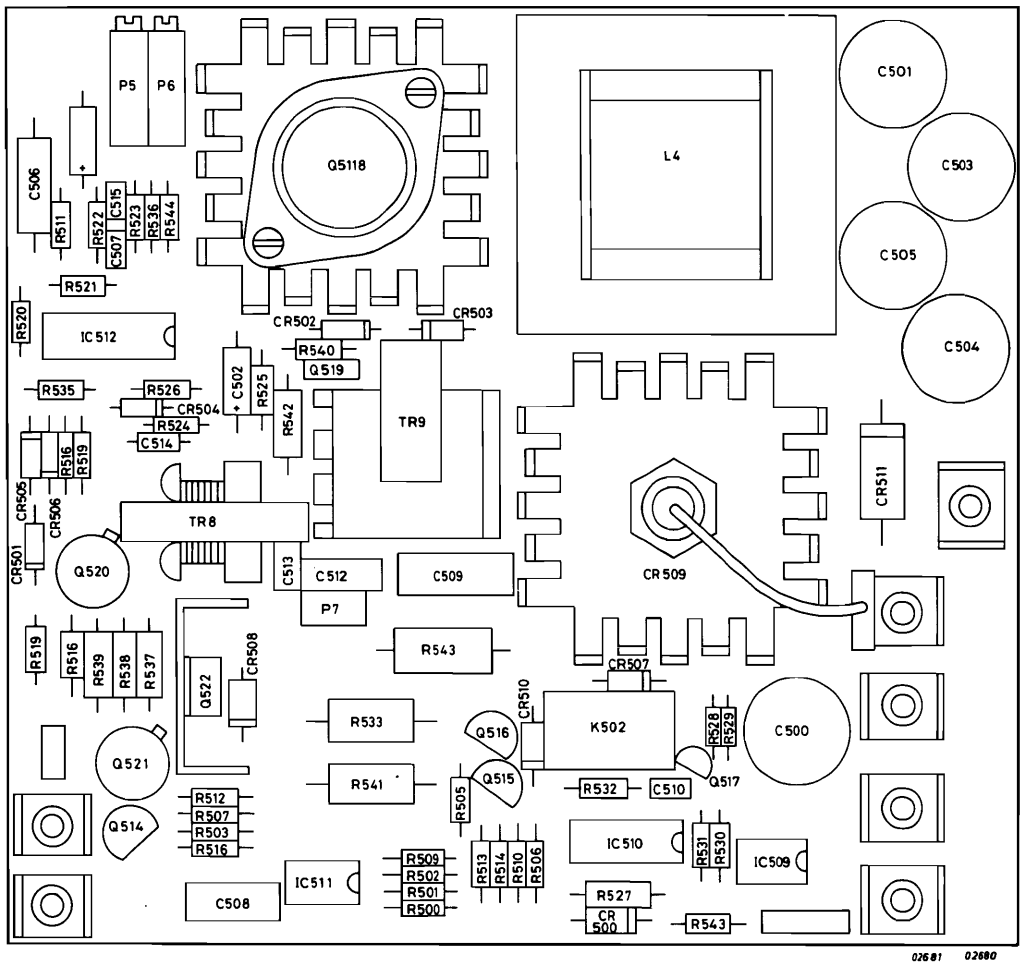

Figure 6.5 M4R BATTERY CARD

IDENTIFICATION CODE NUMBER	SERVICE CODE NUMBER	DESCRIPTION
2011 017 00072	5322 124 74179	CAP.1500UF 200V
2011 031 00309	4822 124 40184	CAP.1000UF 10V
2011 031 00319	5322 124 40382	CAP.470UF 25V
2011 031 00334	4822 124 40228	CAP.470UF 40V
2011 031 00336	5322 124 40383	CAP.1000UF 50V
2011 220 03003	5322 121 41454	CAP.
2011 301 55851	4822 121 40278	CAP.22000PF 400V
2011 301 55852	4822 121 40023	CAP.0,047UF 400V 20%
2011 301 66403	5322 121 44033	CAP.0,1UF 630V
2011 307 48001	4822 121 40519	CAP.3,3NF 250V 10%
2011 308 00554	5322 121 40175	CAP.0,47UF 40V 1%
2022 552 00602	5322 122 34108	CAP.0,1UF CER.
2022 552 01753	5322 122 31586	CAP.SR155C153KAA
2111 250 00065	5322 113 44245	RES.4,7E 5%
2111 250 00136	5322 113 44247	RES.100E RB59 WW
2111 250 00138	5322 113 44248	RES.10E RB59
2111 250 00152	5322 113 41005	RES.470E RB59 5%
2111 250 00159	5322 113 41006	RES.1,5K RB59 5%
2111 250 00168	5322 113 41007	RES.2,2E RB59 WW
2111 250 30437	4822 112 41114	RES.1,8K 5%
2111 250 40501	5322 113 41008	RES.10E 10%
2122 011 00019	5322 103 10023	POTM.1K
2122 362 00436	5322 101 10295	POTM.50K
2222 015 14101	4822 124 20679	CAP.100UF 10V
2222 015 14479	4822 124 20678	CAP.47UF 10V
2222 015 15478	4822 124 20686	CAP.4,7UF 16V
2222 015 16109	4822 124 20697	CAP.10UF 25V
2222 015 16229	4822 124 20698	CAP.22UF 25V
2222 015 17339	4822 124 20712	CAP.33UF 40V
2222 015 18109	4822 124 20728	CAP.10UF 63V
2222 016 16479	5322 124 20371	CAP. 047UF 25V
2222 108 33152	5322 124 24122	CAP.1500UF 50% 6,3V
2222 344 21105	5322 121 40197	CAP.1UF 100V
2222 344 21155	5322 121 40227	CAP.1,5UF 100V
2222 344 21224	4822 121 40232	CAP.0,22UF 100V 10%
2222 344 21334	4822 121 40257	CAP.0,33UF 100V
2222 344 25335	5322 121 40283	CAP.3,3UF 100V
2222 344 41223	5322 121 40308	CAP.0,022UF 250V
2222 344 90002	5322 121 40323	CAP.0,1UF 100V 10%
2222 357 92222	4822 121 41339	CAP.2,2NF 2000V
2222 357 92472	5322 121 44356	CAP.4,7NF 2000V
2222 629 03103	4822 122 30043	CAP.10NF
2222 630 01102	4822 122 30027	CAP.1N 10%
2222 630 01221	4822 122 30094	CAP. 220PF 10% CER
2222 630 01391	4822 122 30091	CAP.390PF 10%
2222 630 01392	4822 122 30098	CAP.3,9NF 100V 10%
2222 630 01471	4822 122 30034	CAP.470PF 10%
2222 630 01561	4822 122 30126	CAP.560PF
2222 630 01681	4822 122 30053	CAP.680PF 10%
2222 631 58151	4822 122 31085	CAP.150PF
2222 631 58181	5322 122 34144	CAP.180PF 10%
2222 632 10339	4822 122 31067	CAP.33PF 2%
2222 632 58479	4822 122 31236	CAP.47PF 2%
2322 151 51004	5322 116 54696	RES.100K 1% 1/8W
2322 151 51009	5322 116 50452	RES. 10E 0,125W 1%
2322 151 51101	5322 116 54474	RES.110E 0,125W 1%
2322 151 51212	5322 116 54557	RES.1,21K 1% 1/8W
2322 151 51213	5322 116 50572	RES.12,1K 1/8W 1%
2322 151 51472	5322 116 50635	RES.1,47K 0,125W 1%
2322 151 51622	5322 116 55359	RES.1,62K 1% 1/8W

IDENTIFICATION CODE NUMBER	SERVICE CODE NUMBER	DESCRIPTION
2322 151 51963	5322 116 54641	RES.19,6K 1/8W 1%
2322 151 52152	5322 116 50767	RES.2,15K 1/8W 1%
2322 151 53162	5322 116 50579	RES.3,16K 1/8W 1%
2322 151 53163	5322 116 54657	RES.31,6K 1/8W 1%
2322 151 53482	5322 116 54585	RES.3,48K 1/8W 1%
2322 151 53831	5322 116 54518	RES.383E 1% 1/8W
2322 151 53832	5322 116 54589	RES.3,83K 1/8W 1%
2322 151 53833	5322 116 50483	RES.38,3K 0,125W 1%
2322 151 54222	5322 116 50729	RES.4,22K 1/8W 1%
2322 151 54223	5322 116 50474	RES.42,2K 1% 1/8W
2322 151 54641	5322 116 50536	RES.464E 0,125W 1%
2322 151 54642	5322 116 50484	RES 4K64 0,25W 1%
2322 151 55112	5322 116 54595	RES.5,11K 1/8W 1%
2322 151 55113	5322 116 50672	RES.51,1K 1% 1/8W
2322 151 56192	5322 116 50608	RES.6,19K 1/8W 1%
2322 151 56811	5322 116 54534	RES.681E 0,125W 1%
2322 151 57501	5322 116 54536	RES.7,5K 1/8W 1%
2322 151 58252	5322 116 54558	RES.8,25K 1/8W 1%
2322 151 58253	5322 116 54689	RES.82,5K 0,125W 1%
2322 151 59092	4822 116 51284	RES.9,09K 1% 1/8W
2322 211 13101	4822 110 63081	RES.100E 5% 1/4W
2322 211 13102	4822 110 63107	RES. 1K 0,25 W 5%
2322 211 13102	4822 110 73107	RES.1K 5% 1/4W
2322 211 13103	4822 110 73134	RES.10K 5% 1/4W
2322 211 13104	4822 110 63161	RES.100K 1/4W 5%
2322 211 13121	4822 110 63083	RES.120E 0,25W 5%
2322 211 13122	4822 110 63109	RES.1,2K 5% 1/4W
2322 211 13123	4822 110 63136	RES. 12K 0,25W 5%
2322 211 13123	4822 110 73136	RES.12K 1/4W 5%
2322 211 13153	4822 110 63138	RES. 15K 0.25W 5%
2322 211 13153	4822 110 73138	RES.15K 1/4W 5%
2322 211 13182	4822 110 63114	RES.1,8K 5% 1/4W
2322 211 13202	4822 110 60115	RES.2K 5% 1/4W
2322 211 13203	4822 110 60142	RES.20K 5% 1/4W
2322 211 13221	4822 110 63089	RES.220E 0,25 W 5%
2322 211 13241	4822 110 60091	RES.240E 1/4W 5%
2322 211 13242	4822 110 60117	RES.2,4K 1/4W 5%
2322 211 13243	4822 110 60144	RES.24K 1/4W 5%
2322 211 13271	4822 110 63092	RES. 270E 0,25 W 5%
2322 211 13271	4822 110 73092	RES.270E 1/4W 5%
2322 211 13301	4822 110 60093	RES.300E 1/4W 5%
2322 211 13331	4822 110 73094	RES.330E 5% 1/4W
2322 211 13338	4822 110 63041	RES.3,3E 1/4W 5%
2322 211 13391	4822 110 63096	RES.390E 0,25 W 5%
2322 211 13432	4822 110 60124	RES.4,3K 5% 1/4W
2322 211 13471	4822 110 63098	RES.470E 1/4W 5%
2322 211 13472	4822 110 63125	RES.4,7K 0,25W 5%
2322 211 13472	4822 110 73125	RES.4,7K 1/4W 5%
2322 211 13473	4822 110 63152	RES.47K 5% 1/4W
2322 211 13479	4822 110 63072	RES.47E 1/4W 5%
2322 211 13512	4822 110 60126	RES.5,1K 5% 1/4W
2322 211 13519	4822 110 70073	RES.51E 1/4W 5%
2322 211 13622	4822 110 60128	RES.6,2K 5% 1/4W
2322 211 13681	4822 110 63103	RES.680E 5% 1/4W
2322 211 13682	4822 110 73129	RES.6,8K 5% 1/4K
2322 211 13689	4822 110 63076	RES.68E 5% 1/4W
2322 211 13752	4822 110 60131	RES.7,5K 5% 1/4W
2322 212 13102	4822 110 53107	RES.1K 1/2W 5%
2322 212 13109	4822 110 53054	RES.10E 1/2W 5%
2322 212 13152	4822 110 53112	RES.1,5K 1/2W 5%

IDENTIFICATION CODE NUMBER	SERVICE CODE NUMBER	DESCRIPTION
2322 212 13222	4822 110 53116	RES.2,2K 1/2W 5%
2322 212 13229	4822 110 53063	RES.22E 1/2W 5%
2322 212 13301	5322 111 44006	RES.300E 1/2W 5%
2322 212 13331	4822 110 53094	RES.330E 5% 1/2W
2322 212 13391	4822 110 53096	RES.390E 1/2W 5%
2322 212 13392	4822 110 53123	RES.3,9K 1/2W 5%
2322 212 13439	5322 111 41003	RES.43E 5% 1/2W
2322 212 13479	4822 110 53072	RES.47E 1|2W 5%
2322 212 13621	4822 116 51232	RES.620E 5% 1/2W
2322 212 13689	4822 110 53076	RES.68E 1/2W 5%
2322 214 13473	4822 110 23152	RES. 47K
2411 011 07257	5322 268 14116	PIN DW786
2411 024 13001	5322 268 94029	JUMPER DCW06
2411 029 11202	5322 267 74056	CONNECTOR E74Y HE901
2411 120 04435	5322 273 34147	MAINS SW. WIKEY LOCK
2411 124 14045	5322 276 14412	SWITCH PUSH MDP
2411 128 02024	5322 277 24091	SLIDER SWITCH 51MP
2411 535 01332	5322 242 74147	CRYSTAL 5,.688M
2411 535 01471	5322 242 74295	CRYSTAL 22,22M
2422 062 02512	5322 267 74062	CONNECTOR F095
2422 086 01423	5322 253 54036	FUSE 8A DELAYED
2422 086 01428	5322 253 54022	FUSE 4A DELAYED
2422 120 00073	5322 271 34128	MICROSWITCH
2422 132 01442	5322 280 74111	RELAY KSNV23016
2422 132 05508	5322 280 70186	RELAY CUPP 001B105
2422 132 05573	5322 280 70187	RELAY V23027
2432 527 00039	5322 121 44293	MAINS FILTER
3122 138 90291	5322 146 20644	TRANSFORM.AT4043-45
3122 138 90301	4822 142 70056	TRANSFORM.AT4043-46
3122 138 90581	5322 142 64084	TRANSFORM.AT4043-48
3122 138 93391	5322 158 14294	TRANSFORM.AT4043-47
5111 000 00141	5322 209 84285	IC N7438N
5111 000 00291	5322 209 84017	IC N74121N
5111 000 00481	5322 209 84167	IC SN74S00N-00
5111 000 00491	5322 209 84475	IC N74S04A
5111 000 00571	5322 209 84671	IC FJB9602
5111 000 00601	5322 209 84237	IC SN74S112N
5111 000 00621	5322 209 84073	IC N7406N
5111 000 00741	5322 209 84341	IC N74132N
5111 000 00791	5322 209 84183	IC SN74S74N-00
5111 000 00801	5322 209 85604	IC N74LS11A
5111 000 00921	5322 209 84954	IC SN74S10N
5111 000 00941	5322 209 54058	ROM 3101A
5111 000 01751	5322 361 14075	FAN 115V
5111 000 01791	5322 209 85195	IC SN74S20N
5111 000 01871	5322 209 85621	IC COM1488
5111 000 01881	5322 209 85619	IC 1489A
5111 000 02071	5322 209 86391	IC.75451B
5111 000 02131	5322 209 85672	IC N74S138B
5111 000 02151	5322 209 85683	IC N74S174B
5111 000 02241	5322 209 85407	IC N74S02A
5111 000 02251	5322 209 85812	IC N74S158F
5111 000 02301	5322 209 85688	IC N74S153B
5111 000 02321	5322 209 86392	IC.74LS257
5111 000 02331	5322 209 84454	IC MC7805CP
5111 000 02341	5322 130 44715	IC 7812
5111 000 02391	5322 130 44716	IC 7912
5111 000 02451	5322 209 85669	IC SN74S157N
5111 000 02471	5322 209 85824	IC SE555N
5111 000 02491	5322 209 85199	IC SN74LS14N

IDENTIFICATION CODE NUMBER	SERVICE CODE NUMBER	DESCRIPTION
5111 000 02511	5322 209 85647	IC N74LS138B
5111 000 02531	5322 209 85453	IC N74S151B
5111 000 02541	5322 209 85814	IC N74S182F
5111 000 02651	5322 209 84823	IC N74LS00A
5111 000 02661	5322 209 85486	IC N74LS04A
5111 000 02691	5322 209 85489	IC N74LS157B
5111 000 02701	5322 209 84995	IC SN74LS08N-00
5111 000 02711	5322 209 85312	IC N74LS02A
5111 000 02721	5322 209 85311	IC N74LS32A
5111 000 02821	5322 209 85561	IC N74LS27A
5111 000 02831	5322 209 84986	IC SN74LS74N-00
5111 000 02851	5322 209 84997	IC SN74LS86N-00
5111 000 02891	5322 209 84999	IC SN74LS175N-00
5111 000 02911	5322 209 86052	IC 74LS283
5111 000 02921	5322 209 85937	IC N74LS298N
5111 000 03591	5322 209 85615	IC N74LS85N
5111 000 03641	5322 209 84996	IC N74LS10A
5111 000 03671	5322 209 85679	IC N74S32A
5111 000 03681	5322 209 85346	IC SN74LS279N-00
5111 000 03791	5322 209 85004	IC SN74LS42N-00
5111 000 03801	5322 209 85266	IC SN74LS123N
5111 000 03841	5322 209 85936	IC AM2907DC
5111 000 03871	4822 209 80447	IC N74LS393N
5111 000 03891	5322 209 85681	IC N74S08A
5111 000 03911	5322 209 85792	IC N74LS273N
5111 000 03931	5322 111 94237	R.METH.10215(15X1K)
5111 000 03941	5322 209 85869	IC SN74LS37AN
5111 000 04011	5322 209 86258	IC 74LS377
5111 000 04021	5322 209 86259	IC.74LS348
5111 000 04091	5322 209 85862	IC SN74LS240N
5111 000 04121	5322 209 86162	IC.74S374
5111 000 04131	5322 209 85967	IC N74LS173N
5111 000 04231	5322 209 85837	IC N74LS51N
5111 000 04261	5322 209 86017	IC N74LS244N
5111 000 04271	5322 130 44433	IC.8251A
5111 000 04291	5322 209 85677	IC N74S38A
5111 000 04981	5322 209 86393	IC.74LS169
5111 000 05211	5322 255 44171	IC MOUNTING DIL 16
5111 000 05221	5322 255 44112	IC MOUNTING DIL 18
5111 000 05261	5322 255 44217	IC.MOUNTING 40PINS
5111 000 05281	5322 209 86416	IC.UDN 6118A
5111 000 05371	5322 209 86394	IC.74LS398
5111 000 05401	5322 209 86395	IC.2910
5111 000 05461	4822 209 80797	IC LM393N
5111 000 05621	5322 130 44517	TRANS.2N3725
5111 010 00613	5322 209 85624	IC 00613
5111 010 01701	5322 209 85083	RESISTOR 220/3900HM
5111 010 01801	5322 209 85084	IC 1801 (SELECT)
5111 010 02731	5322 157 54097	COIL 2731
5111 010 03761	5322 157 54084	CHOKE SLF 3761
5111 010 05472	5322 209 10194	PROM 5472
5111 010 04231	5322 157 54139	COIL 4231
5111 010 05521	5322 158 14295	CHOKE COIL
5111 010 05531	5322 157 51234	COIL 5531
5111 010 05541	5322 158 14296	CHOKE COIL
5111 010 05551	5322 157 51242	TRANSFORMER TR5551
5111 010 05561	5322 157 51243	TRANSFORMER TR5561
5111 010 05571	5322 157 51244	TRANSFORMER TR5571
5111 100 18262	5322 492 34487	SPRING LEFT
5111 100 18272	5322 492 34488	SPRING RIGHT
5111 100 18292	5322 405 46089	EXTRACTOR

IDENTIFICATION CODE NUMBER	SERVICE CODE NUMBER	DESCRIPTION
5111 100 18303	5322 466 85732	PRINT RIGIDIZING
5111 199 65530	5322 218 74572	POWERING ASSY
5111 199 66000	5322 216 21026	PCB BATTERY M4R
5111 199 66070	5322 216 25736	PCB REG.M4R
5111 199 66120	5322 216 21027	PCB FILTER 5V
5111 199 66130	5322 216 21028	PCB FILTER 16V
5111 199 66310	5322 216 25626	FRCP ASSY
5111 199 67580	5322 216 25516	PCB.CP7R /P857-R
8211 220 04273	5322 209 86543	IC 74LS245 (SELECT)
9300 873 20682	5322 131 94061	DISPLAY FG610 A1
9330 042 10112	4822 130 30084	DIODE AAZ18
9330 150 31112	5322 130 30554	DOIDE BYX42/300
9330 150 51112	5322 130 30597	DOIDE BYX42/300R
9330 219 20112	5322 130 40417	TRANSISTOR BSX20
9330 226 40112	5322 130 40021	TRANSISTOR 2N2905
9330 283 50112	5322 130 44019	TRANSISTOR BSX60
9330 359 60112	5322 130 40468	TRANS.2N2905A
9330 618 00112	5322 130 44502	TRANSISTOR 2N2906
9330 873 30112	4822 130 30414	DIODE BY164
9331 119 40112	5322 130 34405	DIODE 1N823
9331 119 90682	5322 130 44004	TRANS.2N5302
9331 177 10112	4822 130 34174	ZENER DIODE BZX79
9331 177 20112	4822 130 34233	DIODE BZX79C5V1
9331 177 30112	4822 130 34173	ZENER DIODE BZX79
9331 178 10112	4822 130 34197	DIODE BZX79 C12
9331 190 60112	5322 130 34323	DIODE 1N4005
9331 321 40112	4822 130 30765	Z-DIODE BZX75/C3V6
9331 513 40112	5322 130 34304	DOIDE BYX49/300
9331 678 80112	5322 130 24054	THYRISTOR BTW92/600
9331 737 10112	5322 130 44084	TRANS.BUY47
9331 849 30112	5322 130 44417	TRANS.BDX35
9332 306 00112	5322 130 44553	TRANS.BDX77
9332 306 10112	5322 130 44278	TRANS.BDX78
9332 619 40112	5322 130 44734	DIODE BYX99/600
9332 619 50112	5322 130 34646	DIODE BYX99/600R
9332 700 60112	5322 130 34523	DIODE SD51
9332 715 30112	5322 130 44729	TRANS.BUX81
9332 788 80112	4822 130 31314	DOIDE CQY24
9333 341 80112	5322 130 34605	DOIDE BAX12A
9333 347 60112	5322 209 85662	IC TDA1060
9333 377 40112	5322 209 14248	IC COM 6016
9333 872 90112	5322 130 31489	DIODE BYW30/50
9333 873 20112	5322 130 31491	DIODE BYW31-50
9333 912 70112	4822 130 31195	DOIDE BYW29-50
9334 004 80112	5322 130 44817	DIODE SD41
9334 227 90112	5322 130 20106	TRIAC BTX94H-800
9334 639 90112	5322 130 44832	TRANS.2N4400
9334 640 00112	5322 130 44835	TRANS.2N4402
9334 640 10112	5322 130 34894	DOIDE PFZ6,8
9334 941 60682	5322 209 86396	IC.AM2932DC
9335 001 00112	4822 130 31348	DOIDE BYV96D
9335 376 60112	5322 130 31493	DIODE PFZ20

END OF REPORT

7 MAINTENANCE

SECTION	7.1	DISASSEMBLY	PAGE 7-2
	7.1.1	Removing the Rack from the Cabinet	7-2
	7.1.2	Rack Cover	7-2
	7.1.3	Mains Safety Shield	7-2
	7.1.4	Battery Card	7-2
	7.1.5	Regulator Card	7-2
	7.1.6	Capacitor Assembly	7-3
	7.1.7	Heatsink Assembly	7-3
	7.1.8	16 Volt Filter Card	7-3
	7.1.9	5 Volt Filter Card	7-3
	7.1.10	Battery	7-4
	7.2	ADJUSTMENTS	7-4
	7.3	POWER SUPPLY WAVEFORMS	7-4

LIST OF DIAGRAMS

FIGURE	7.1	Main Assemblies of M4R Power Supply	7-5/6
	7.2	Waveforms for M4R Power Supply	7-7

7.1 DISASSEMBLY

WARNING: Before attempting any disassembly procedures, switch off the mains supply to the rack.

The components of the power supply and battery back-up system (if fitted) are mounted in the box at the top of the rack. Figure 7.1 is a top view of the rack showing the main components of the power supply.

7.1.1 REMOVING THE RACK FROM THE CABINET

The rack is mounted on telescopic slides in the cabinet.

. Unscrew the two rack retaining screws. These are located through the operators panel at the front of the rack, see figure 1.1.

. Slide the rack forward out of the cabinet as far as it will go.

7.1.2 RACK COVER

. Perform the instructions at para. 7.1.

. Unscrew and remove the four screw in the cover.

. Lift off the cover.

7.1.3 MAINS SAFETY SHIELD

The safety shield is mounted on four pillars above the regulator card.

. Perform the instructions at paras. 7.1 - 7.2.

. Unscrew and remove the four nuts which hold the shield in place.

. Lift off the shield.

7.1.4 BATTERY CARD (if fitted)

The battery card is mounted on four pillars towards the front of the rack, slightly overlapping the regulator card.

. Perform the instructions at paras. 7.1 - 7.2.

. Disconnect the Power, Logic Signal and Regulator Card connectors, see figure 1.9.

. Unscrew and remove the four nuts which hold the card in place.

. Lift off the card.

7.1.5 REGULATOR CARD

. Perform the instructions at paras. 7.1 - 7.4.

. Disconnect the Power, Logic Signal, Voltage Sense and Mains connectors, see figure 1.8.

. Unscrew and remove the flying lead connections at the heatsink assembly. These are terminals NS1 and 0 to transformers TR1 and TR4 and the mechanical ground connector E.
. Unscrew and remove the mechanical ground connection for the Voltage Sense signals.
. Unscrew and remove the four support pillars for the safety shield, one support pillar for the battery card (which also holds the regulator card in place) and one nut at the corner of the regulator card nearest the front of the rack.
. Lift off the regulator card with capacitors C300-303 attached.

7.1.6 CAPACITOR ASSEMBLY

. Perform the instructions at paras. 7.1 - 7.2
. Unscrew and remove the four nuts and bolts (one at each end of each arm of the assembly) which attach the assembly to the back panel pcb at one end and to the heatsink assembly at the other.
. Lift off the assembly.

7.1.7 HEATSINK ASSEMBLY

. Perform the instructions at para. 7.6.
. Unsolder and remove the lead at the cathode of diode CR110, see figure 1.10.
. Unscrew and remove the other connections to the assembly. The "Faston" connector to mechanical ground (E) may be left attached.
. Unscrew and remove the four screws which hold the assembly in place, one of which is the mechanical ground connection (E).
. Lift off the assembly.

7.1.8 16 VOLT FILTER CARD

. Perform the instructions at paras. 7.1 - 7.2.
. Unsolder and remove the lead at the cathode of CR110 of the heatsink assembly, see figure 1.10.
. Disconnect all other connections to the card, either at the card or at the other end of the lead (ie. for leads which are soldered to the card).
. Unscrew and remove the three nuts which hold the card in place.
. Lift off the card.

7.1.9 5 VOLT FILTER CARD

. Perform the instructions at paras. 7.1 - 7.2.
. Unscrew and remove the two connections to the card.
. Unscrew and remove the two nuts which hold the card in place.
. Lift off the card.

7.1.10 BATTERY (if fitted)

. Perform the instructions at paras. 7.1 - 7.2.
. Disconnect the two connections to the battery card.
. Unscrew and remove the two long screws which pass through the battery pack.
. Lift off the battery pack.

7.2 ADJUSTMENTS

Trimpots mounted on the regulator card provide the following adjustments, (see figure 1.8);

. +5VL supply output voltage is adjusted with P1, with supply under full load, ie. 60A.
. +5VL supply overcurrent limit is adjusted with P2 (to trip as P2 is turned anti-clockwise) for a current of 65A.
. +16VM supply output voltage is adjusted with P4, with supply loaded to 11A (this load simulates nominal full load simultaneously on the +16VM, +16VL, -16VL, -5VM and +5VM supplies).
. 16 Volt supplies overcurrent limit is adjusted with P3 (to trip as P3 is turned anti-clockwise) with the +16VM supply loaded to 14A, (this load simulates a simultaneous overcurrent on the +16VM, +16VL, -16VL, -5VM and +5VM supplies).
. Power off detection time is adjusted to 10ms with P5.
. -5VM supply output voltage is adjusted with P401, with supply under full load, ie. 0.8A.
. -5VM supply overcurrent limit is adjusted with P402 (to trip as P402 is turned anti-clockwise) for a current of 1.5A.

Trimpots mounted on the Battery Card provide the following adjustments (see figure 1.9);

. +5VM supply output voltage is adjusted with P5, with supply under full load, ie. 8A.
. +5VM supply overcurrent limit is adjusted with P6 (to trip as P6 is turned anti-clockwise) for a current of 10A.
. Battery cut-off voltage (battery back-up control) is adjusted with P7 between +12V and +13V.

7.3 POWER SUPPLY WAVEFORMS

Figure 7.2 shows the wave forms that can be monitored at key points in the electronics with an osciloscope. These waveforms are all cyclic so they can be continuously monitored. Note: The shapes of the waveforms shown are typical, the actual waveforms monitored for a given rack may differ slightly.

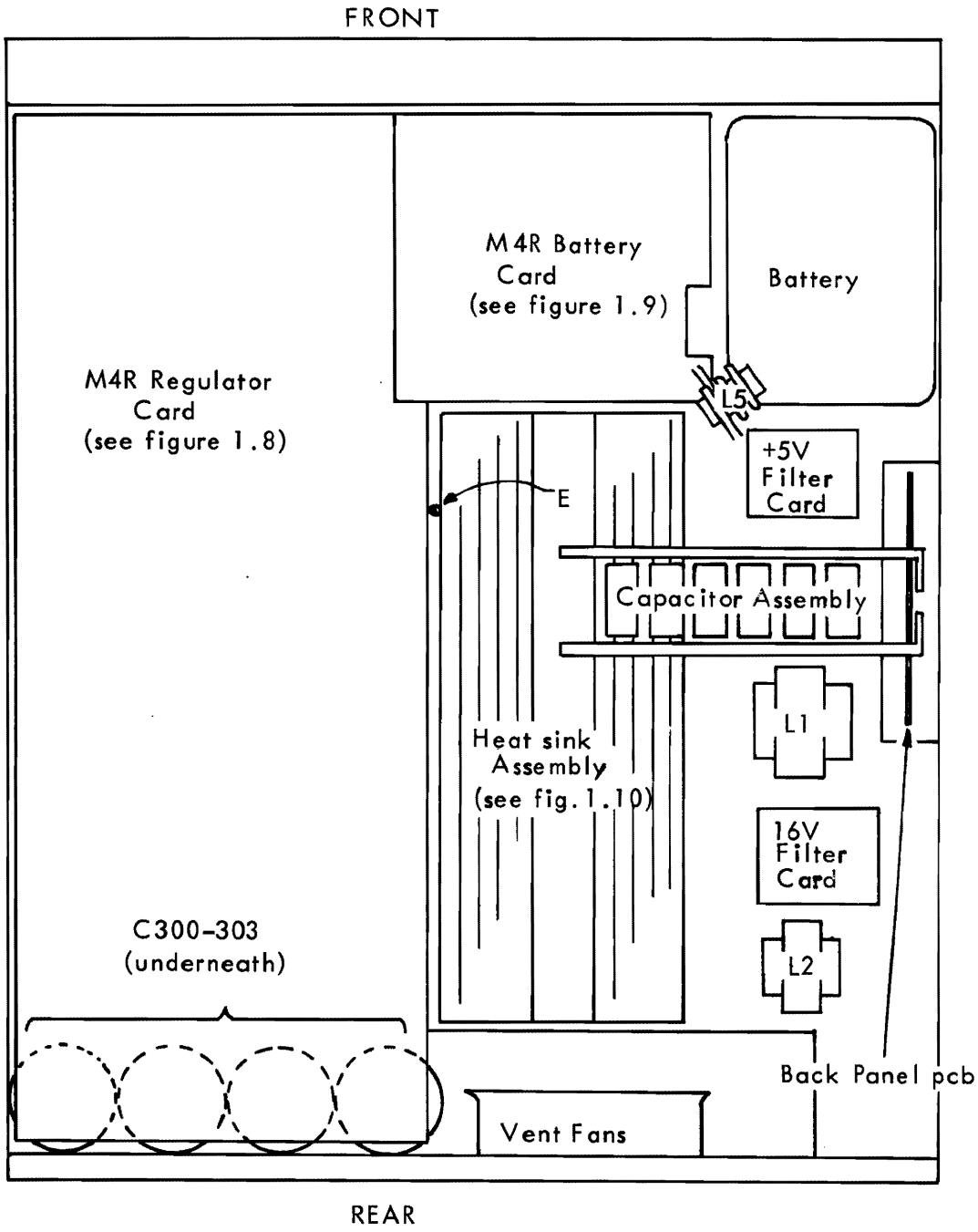

Figure 7.1 MAIN ASSEMBLIES OF M4R POWER SUPPLY - SHOWN WITH RACK COVER AND MAINS SAFETY SHIELD REMOVED

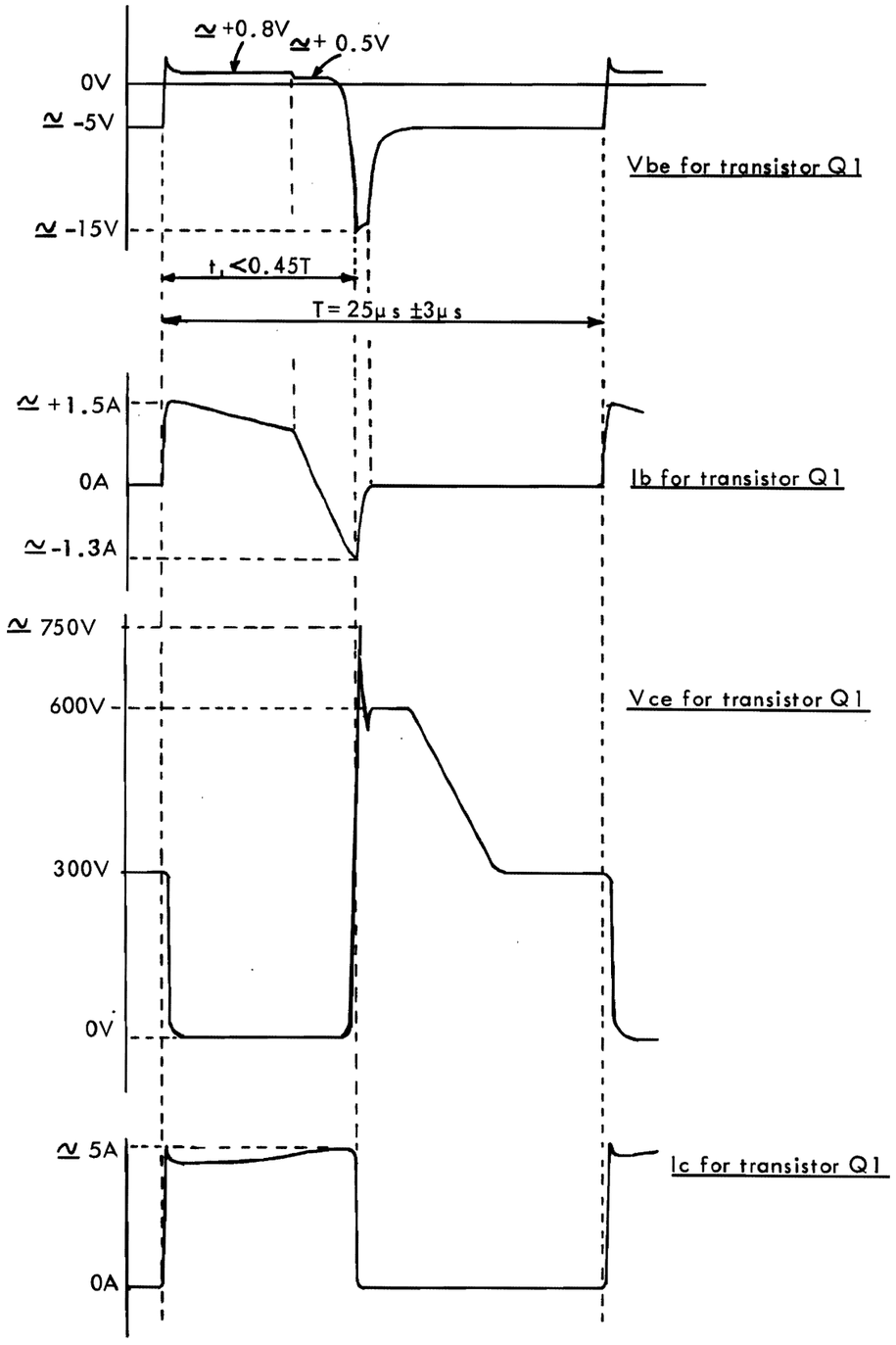

(a) : for +5VL supply on full load

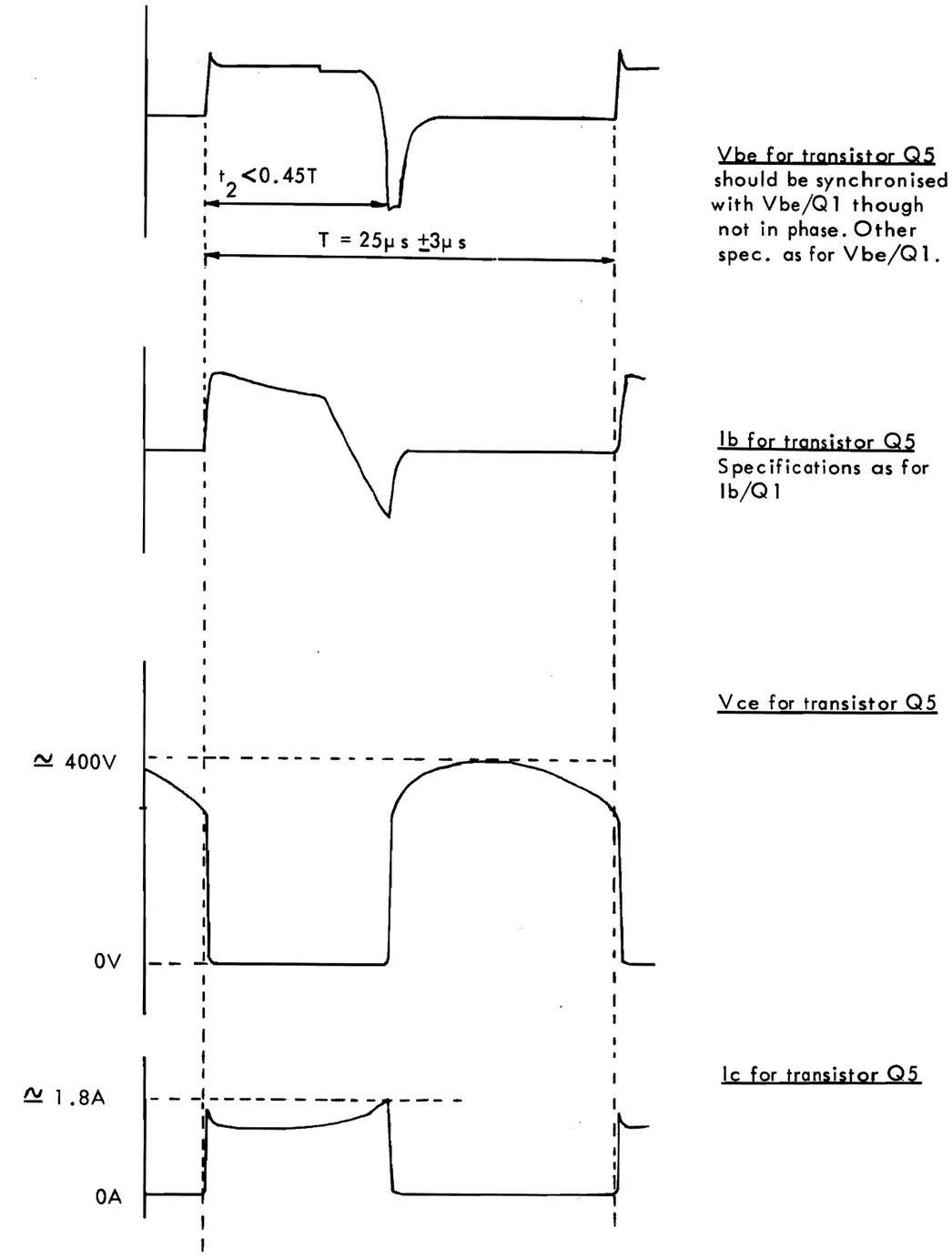

(b) : for 16V supplies on full load

Figure 7.2 WAVEFORMS FOR M4R POWER SUPPLY