F. de Crom

Data Systems

PHILIPS

Field Support Manual

Extended Control Panel

P858

A PUBLICATION OF
PHILIPS DATA SYSTEMS
APELDOORN, THE NETHERLANDS

PUB. NO. 5122 991 30121

DATE April 1981

Great care has been taken to ensure that the information contained in this handbook is accurate and complete. Should any errors or omissions be discovered, however, or should any user wish to make a suggestion for improving this handbook, he is invited to send the relevant details to:

PHILIPS DATA SYSTEMS
SERV. DOC. AND TRAINING DEPT.
P.O. Box 245, APELDOORN,
THE NETHERLANDS.

Copyright © by PHILIPS DATA SYSTEMS.
All rights strictly reserved. Reproduction or issue to third parties in any form whatever is not permitted without written authority from the publisher.

TABLE OF CONTENTS

CHAPTER	1	GENERAL DESCRIPTION	PAGE 1-1 thru 1-3
	2	FUNCTIONAL DESCRIPTION	2-1 thru 2-6
	3	DETAILED DESCRIPTION	3-1 thru 3-6
	4	DIAGRAMS	4-1 thru 4-3
	5	LISTINGS	5-1
	6	PARTS LIST	6-1 thru 6-4
	7	TROUBLE-SHOOTING AND REPAIR	7-1 thru 7-2

1 GENERAL DESCRIPTION

SECTION	1.1	INTRODUCTION	PAGE 1-2
	1.2	PHYSICAL DESCRIPTION	1-2
	1.3	TECHNICAL DATA	1-2
	1.3.1	Performance Data	1-2
	1.3.2	Power Requirements	1-2
	1.3.3	Physical Characteristics	1-2
	1.3.4	Environmental Conditions	1-2
	1.4	INTERFACE	1-3
	1.5	APPLICATION NOTES	1-3
	1.6	INSTALLATION DATA	1-3
	1.6.1	Strap-Setting	1-3
	1.6.2	Mounting	1-3
	1.6.3	Interconnections	1-3
	1.6.4	Compatibility	1-3

LIST OF ILLUSTRATIONS

FIGURE	1.1	ERCP FRONT PANEL AND STRAPPING	1-4

1.1 INTRODUCTION (FIGURE 1.1)

The ERCP is the person-machine interface that provides the controls and indications that are needed to access and monitor the system. It consists mainly of address and data switches which, in association with function switches, permit a used to load and read memory and registers, set the system to free running or single-step operation, etc. Address and data lamps display the contents of memory or register in accordance with the selected function.

1.2 PHYSICAL DESCRIPTION

The ERCP consists of a front-panel, behind which is mounted a printed circuit board on stand-off pillars. The board is secured to the panel by cheese-head screws. The panel assembly is secured to the CPU card-cage by a hexagonal bolt at each corner which passes through a lug and screws into a tapped stand-off post. The panel connector mates with a float-mounted connector on the card-cage.

1.3 TECHNICAL DATA

1.3.1 PERFORMANCE DATA

SERIAL DATA INTERFACE: V24/V28 — TRANSMISSION RATE = 4800 baud
LOGICAL LEVELS: LOGICAL 0 = +12V
LOGICAL 1 = -12V

1.3.2 POWER REQUIREMENTS

VOLTAGE	+5V ±0.25V	+12V ±1.2V	-12V ±1.2V
CURRENT (max)	2A	150mA	20mA

1.3.3 PHYSICAL CHARACTERISTICS

OVERALL DIMENSIONS 482mm x 175mm x 60mm (19"standard)

1.3.4 ENVIRONMENTAL CONDITIONS

	PARAMETER	OPERATIONAL	NON-OPERATIONAL
CLIMATIC	Temperature range Temperature gradient Pressure Humidity without condensation	0°C to 50°C ⩽ 1°C/mn 600mb to 1100mb ⩽ 90%	-30°C to 70°C ⩽ 1°C/mn 600mb to 1100mb ⩽ 90%

	PARAMETER	OPERATIONAL	NON-OPERATIONAL
MECHANICAL	Vibration	1g or 0.25mm pk-to-pk/5Hz-150Hz	ditto
	Shock	15g	ditto

1.4 INTERFACE

Pin No.	Signal	Function
J1-1	LOCK	When LOCK = "1", ERCP inhibited except for INT
2	SDMP	Serial Data Master-to-Panel
3	OV(GND)	
4	+5V	General Power Supply (lights POWER lamp)
5	+12V	Logic 0 level of serial data
6	SDPM	Serial Data Panel-to-Master
7	RTCE	Real Time Clock Enable (active at "1")
8	RESETN	Resets Panel
9	-12V	Logic 1 level of serial data

1.5 APPLICATION NOTES

The ERCP is specifically intended for use with P858 systems.

1.6 INSTALLATION DATA

1.6.1 STRAP-SETTING (SEE FIGURE 1.1)

1.6.2 MOUNTING

The ERCP is normally mounted at the front of the sliding-drawer CPU card-cage.

1.6.3 INTERCONNECTIONS

The male connector of the ERCP mates directly with the female connector of the card-cage i.e. no connecting cable is required.

1.6.4 COMPATIBILITY

The ERCP can be used only with type M4P and M5P power supply units (P858 systems).

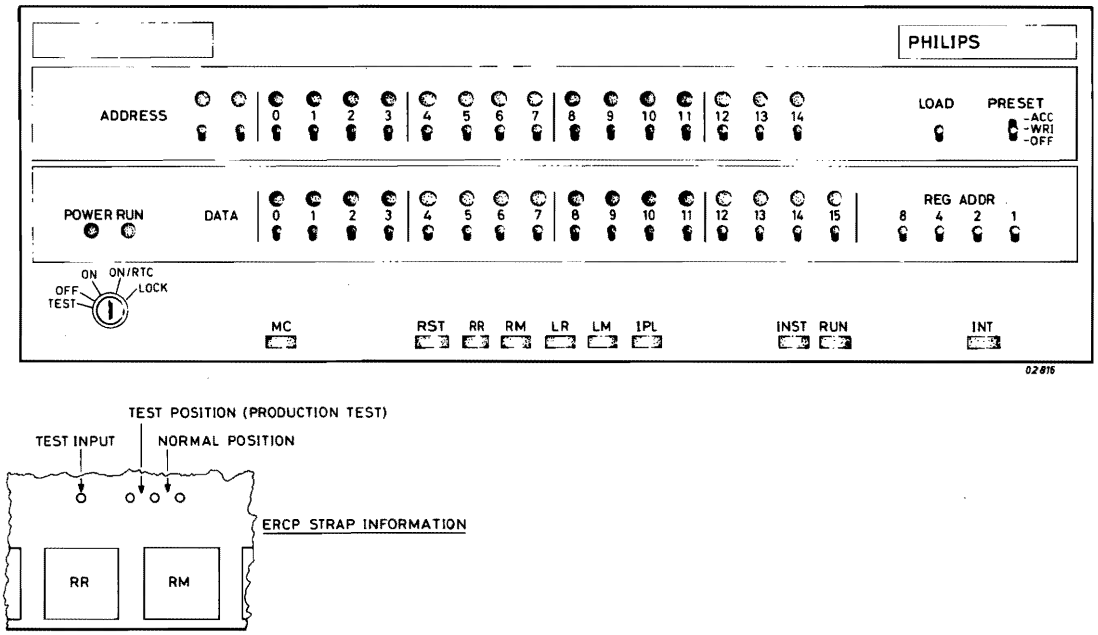

Figure 1.1 ERCP FRONT PANEL AND STRAPPING

2 FUNCTIONAL DESCRIPTION

SECTION	2.1	ERCP FACILITIES	PAGE 2-2
	2.1.1	Rotary Key-Switch and Command Functions	2-2
	2.1.2	Address Functions	2-2
	2.2	ERCP CONFIGURATION	2-3

LIST OF ILLUSTRATIONS

FIGURE	2.1	ERCP BLOCK DIAGRAM	2-6

LIST OF TABLES

TABLE	2.1	CONTROL PANEL SWITCHES AND LAMPS	2-3

2.1 ERCP FACILITIES (TABLE 2.1)

The top half of the ERCP contains ADDRESS controls, the bottom half contains DATA controls and function controls. When the computer is running, the BIO-line states are not shown by the DATA lamps and the MAD-line states are not shown by the ADDRESS lamps. But when the computer stops the address and the contents of the next instruction are displayed by the ADDRESS and DATA lamps, respectively. The ADDRESS half of the panel provides debugging facilities with the following functions:

1. Display or load memory
2. Halt on a preset memory address

2.1.1 ROTARY KEY-SWITCH AND COMMAND FUNCTIONS

The system is switched on by setting the rotary key-switch to ON, ON/RTC, or LOCK. The lock position disables all ERCP functions except interrupt, which is still operable with the ERCP locked. With the ERCP switched to ON or ON/RTC, the computer is set to the run state by pressing RUN or IPL. Pressing any of the function switches MC, INST, RST, RR, RM, LR LM will reset the run state, A lamp lights to indicate that the computer is in the run state and extinguishes to indicate that it is not. When the rotary key switch is set to TEST, the computer is set to the diagnostic state.

2.1.2 ADDRESS FUNCTIONS

During normal running (PRESET at OFF) the program increments the memory Address Register and continues until stopped automatically at the end of the program or by intervention at the ERCP. When the computer stops, the ADDRRESS lamps display the address of the next instruction.

For either a read memory (RM) or load memory (LM) function the ADDRESS lamps display the address placed in the ERCP microcomputer by the ERCP switches. The address is loaded by setting the switches and then pressing the LOAD switch. Thereafter, each time RM or LM is pressed, the Memory Address Register is incremented and the ADDRESS lamps display the new address.

Halt on preset address is performed by setting the PRESET switch to ACC or WRI. The ERCP address is set on the ADDRESS switches and the LOAD switch is pressed. For PRESET ACC the computer will halt whenever the address set on the ERCP matches the address on the MAD lines.

For PRESET WRI the computer will halt whenever the address set on the ERCP matches the address on the MAD lines during a write operation.

2.2 ERCP CONFIGURATION (FIGURE 2.1)

The electronics of the ERCP consists of a microcomputer, which scans the function switches. When a function switch is operated, the μC:

1. Memorizes the selected function.
2. Reads the ADDRESS, REG ADDR, PRESET and DATA switches in accordance with the requirements of the selected function.
3. Generates a hexadecimal code for the address or data value and serially transmits the code to the computer (signal SDPM).
4. Generates a hexadecimal code for the function and serially transmits the code to the computer.
5. Waits for the computer to reply (signal SDMP) and lights the appropriate ADDRESS/DATA lamps.
6. Lights or extinguishes the RUN lamp to indicate the computer status.

	KEY SWITCH
OFF/ON	Main power switch connected directly to the power supply. The power is switched on (POWER lamp lighted) for positions ON, ON/RTC, LOCK and TEST.
ON	All panel controls are enabled.
ON/RTC	All panel controls are enabled, and the Real Time Clock operates.
LOCK	All control-panel command switches are disabled.
TEST	The automatic microdiagnostic test mode is selected.
	FUNCTION SWITCHES
MC	Master Clear: Clears or resets most hardware logic. Activates the Bus signal CLEARN, and the CPU signals MCL, MCLN.
RUN	Begins the program.
INST	Instruction Step: Each time INST is pressed, the CPU performs the one instruction indicated by the program counter and then halts. INST may be used to step the computer through a program (or part of one) instruction-by-instruction.
RST	Read status. The contents of the program status word are displayed on the DATA lamps.
RR	Read Register. The contents of the scratchpad register (A0-A15) selected by the REG ADDR switches are displayed on the DATA lamps.
RM	Read Memory. The contents of memory are displayed on the DATA lamps. Consecutive words can be read by repeated pressing of the RM button. The memory address is selected by the ADDRESS switches. The panel address register is automatically incremented; the program counter is not used or affected.

Table 2.1 CONTROL PANEL SWITCHES AND LAMPS

	FUNCTION SWITCHES
LR	Load Register. The word code set on the DATA switches is loaded into the scratchpad register (A0-A15)specified by the REG ADDR switches.
LM	Load Memory. The word code set on the DATA switches is loaded into memory. Consecutive words can be loaded by repeated pressing of LM. The memory address is selected by the ADDRESS switches. The panel address register is automatically incremented; the program counter is not used or affected.
IPL	Initial Program Loader. An initial bootstrap program located in a hardware read only memory is loaded into memory word locations 00 to 256.
INT	Interrupt. This button generates an Interrupt Request Level according to system for the Operator's interrupt. The same interrupt can be set by the I/O console via the integral serial control unit. The interrupt may be used by the operator, for example, to change the running program with information supplied by the operator.
	DATA
DATA	The 16 DATA switches are used to set a data word onto the Bus BIO lines during load register (LR) and load memory (LM) operations. For all computer operations, the DATA lamps display the contents of the Bus BIO lines. When a running computer stops, the DATA lamps display the contents of the next instruction. For RR and LR operations, the DATA lamps display the contents of the scratchpad register (A0-A15) selected by REG ADDR or RM and LM operations, the DATA lamps display the contents of the memory address selected by the panel address register.
	ADDRESS SECTION
ADDRESS	The ADDRESS switches are used to select an initial memory address for read memory (RM) and load memory (LM) operations. When a running computer stops, the ADDRESS lamps display the address of the next instruction. For RM and LM operations, the ADDRESS lamps display the contents of the panel address register, which is loaded from the ADDRESS switches and incremented by the RM and LM operations. No control is provided for bit 15 (character selector) because the panel accesses only memory word addresses.
LOAD	When this button is pressed, the code set on the ADDRESS switches is immediately loaded into the panel μC. This address is incremented by successive RM or LM operations; the address register is reloaded from the MAD lines for any other operation.
PRESET	This switch is used to select a Stop On Address mode. The stop will occur when the MAD-line address, via the panel μC compares with the code set on the ADDRESS switches.

Table 2.1 CONTROL PANEL SWITCHES AND LAMPS (CONTINUED)

	DATA	
	OFF	Normal operation. Do not stop on address.
	ACC	Stop On Address, Access. Stop when any memory operation accesses the address set on the ADDRESS switches.
	WRITE	Stop On Address, Write. Stop when any memory operation writes at the location set on the ADDRESS switches.
	SCRATCHPAD REGISTERS	
REG ADDR	These four switches select one of the scratchpad registers (A0-A15) to be accessed by the read register (RR) or load register (LR) operation.	

Table 2.1 CONTROL PANEL SWITCHES AND LAMPS (CONTINUED)

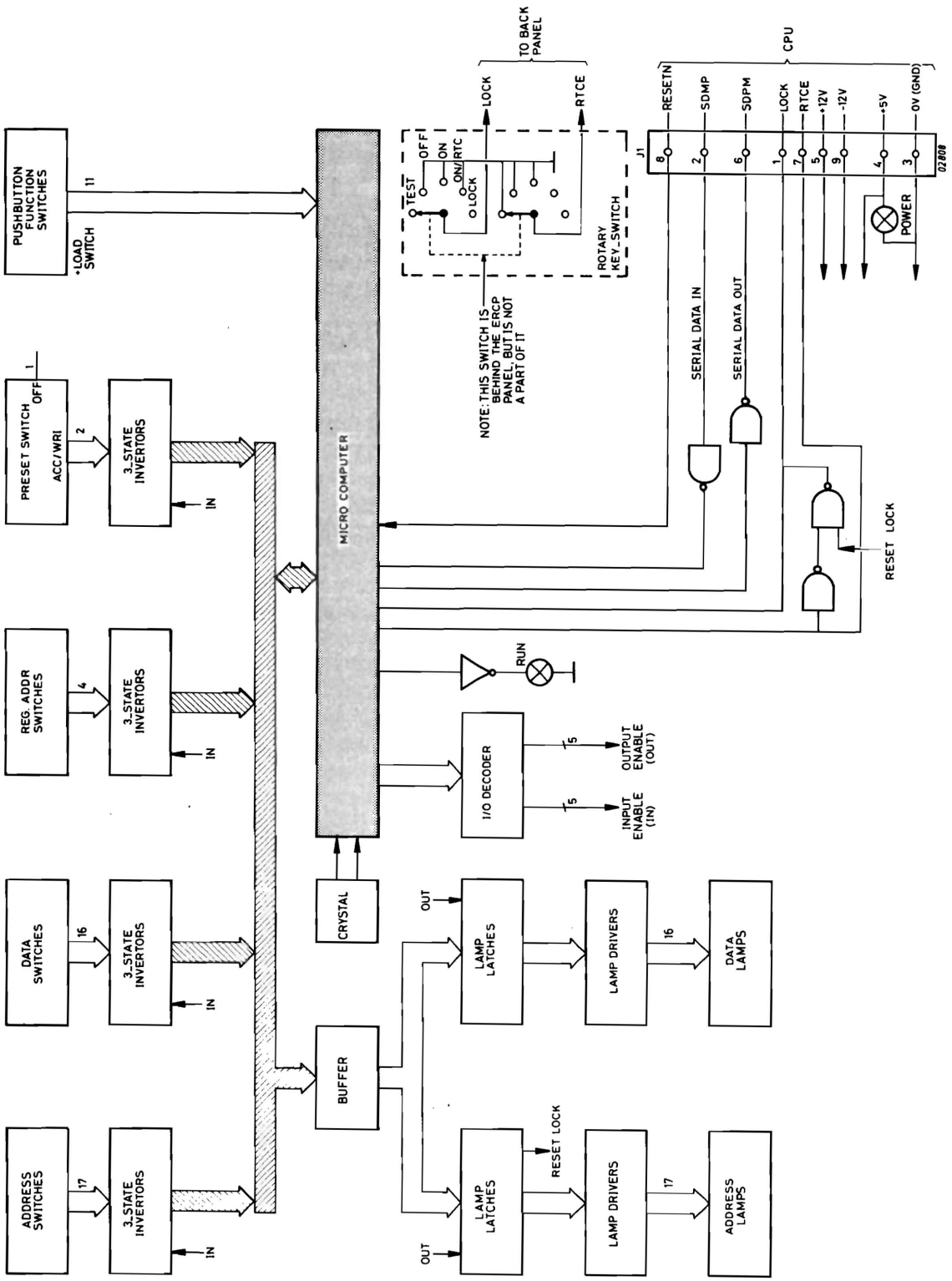

Figure 2.1 ERCP BLOCK DIAGRAM

3 DETAILED DESCRIPTION

SECTION 3.1 DETAILED DESCRIPTION PAGE 3-2

LIST OF ILLUSTRATIONS

FIGURE 3.1 FUNCTION SELECT FLOW CHART 3-4
3.2 PRESET SELECT FLOW CHART 3-5
3.3 TEST FUNCTIONS FLOW CHART 3-6

LIST OF TABLES

TABLE 3.1A SDPM FUNCTIONS 3-2
3.1B SDMP FUNCTIONS AND SIGNAL FORMATS 3-3

3.1 DETAILED DESCRIPTION (FIGURE 3.1 TO 3.3, AND 4.1)

A summary of ERCP functions, hexadecimal serial data codes, lamp indications and signal interfaces is given in Tables 3.1A and 3.1B.

Because the μC program is not normally accessible for testing it is not described in detail. Instead an outline of the scheme for encoding and transmitting/ receiving serial data is provided by figures 3.1 to 3.3. The circuit diagram is shown on Figure 4.1.

Test procedures are detailed in Chapter 7.

SWITCH SELECTION	FUNCTION	HEXADEC. CODE	LAMP INDICATION
ADDRESS	17 address bits	/Bx Bx Bx Bx Bx	According to selected function
REG ADDR	4 reg. address bits	/3x	
DATA	16 data bits	/3x 3x 3x 3x	
MC	Master Clear	/40	DATA (Program Counter A0)
LR	Load Register	/41	DATA (DATA switches)
RR	Read Register	/42	DATA (REG ADDR)
RST	Read Status	/43	DATA (Program Status Word)
IPL	Initial Program Load	/44	RUN
LM	Load Memory (at address pointed to by memory Address Register-MAR).	/55	ADDRESS (Next address) DATA (loaded data)
INT	Interrupt	/46	No change
RM	Read MAR	/57	ADDRESS (Next address) DATA (read data)
LOAD	Load MAR	/48	ADDRESS (selected address)
INST	Instruction (execute one instruction)	/49	DATA (Program Counter A0)
RUN	Set CPU to RUN mode	/4B	RUN
PRESET:			
ACC	Load Preset Address Register (PAR) and enable stop on any memory access.	/4C	When RUN button operated, ADDRESS lamps show PRESET address.
WRI	Load PAR and enable stop for write access only.	/4D	
OFF	Disable the preset stop function	/4F	No change.
-	Test (If rotary key switch set to TEST)	/4E	According to test function

Serial Data Panel-to-Master (SDPM) Codes

X - according to selected value

Table 3.1A SDPM FUNCTIONS

FUNCTION NAME	FUNCTION	HEXADEC. CODE	LAMP INDICATION
RUNZ0	CPU Mode changed from run to idle	/40	RUN off
RUNZ1	CPU Mode changed from idle to run	/41	RUN on
TEST	Production testing only	/42	-

Serial Data, Master-to-Panel (SDMP) Codes

LAMP	FUNCTION
POWER	Indicates +5V available at ERCP
RUN	Indicates CPU in RUN mode

SIGNAL	FUNCTION
LOCK (high)	Inhibits all ERCP functions
RTCE (high)	Enables the Real Time Clock Interrupt

HEXADECIMAL CODE FORMAT

1 start bit, 8 code bits, 2 stop bits

EXAMPLE:

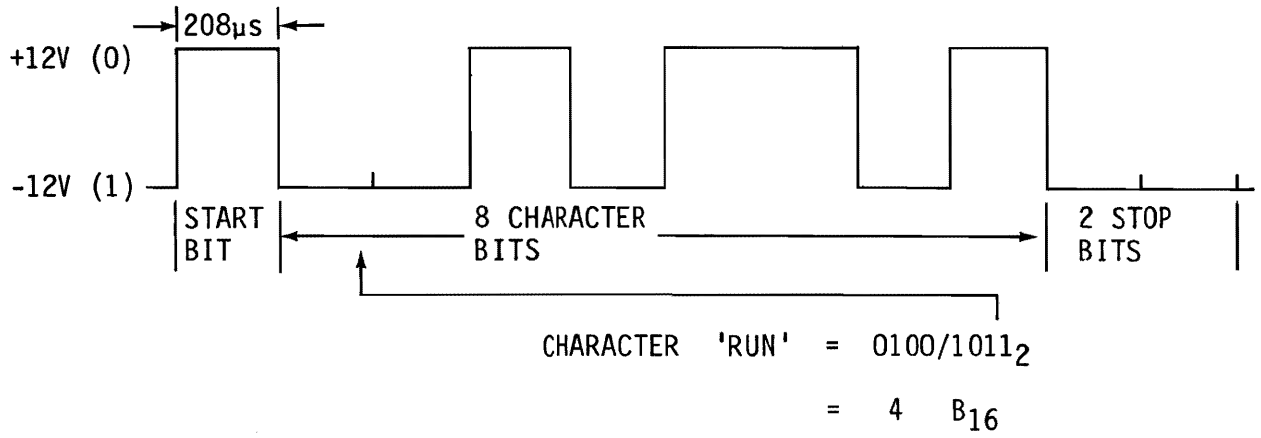

Note: Least Significant digit is transmitted first.

Table 3.1B SDMP FUNCTIONS AND SIGNAL FORMATS

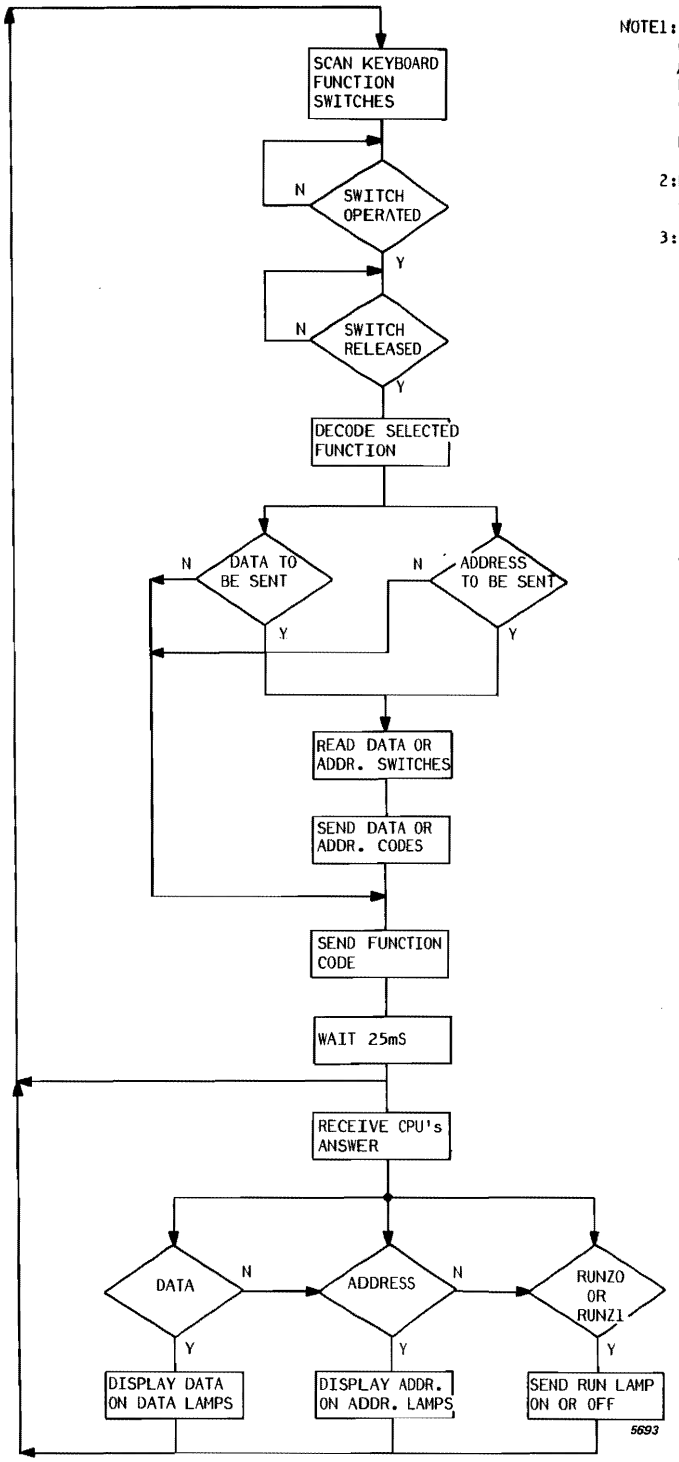

NOTE1: TO LOAD A REG. ADDR. THE USER OPERATES THE LR SWITCH. THE µC SENDS THE REG. ADDR. CODE FOLLOWED BY A SYNTHESIGED RR CODE. IT THEN SENDS THE ADDRESS CODE FOLLOWED BY THE LR CODE.

2:FOR THE PRESET FUNCTIONS SEE FIG. 3.2

3:FOR TEST FUNCTIONS SEE FIG. 3.3

Figure 3.1 FUNCTION SELECT FLOW CHART

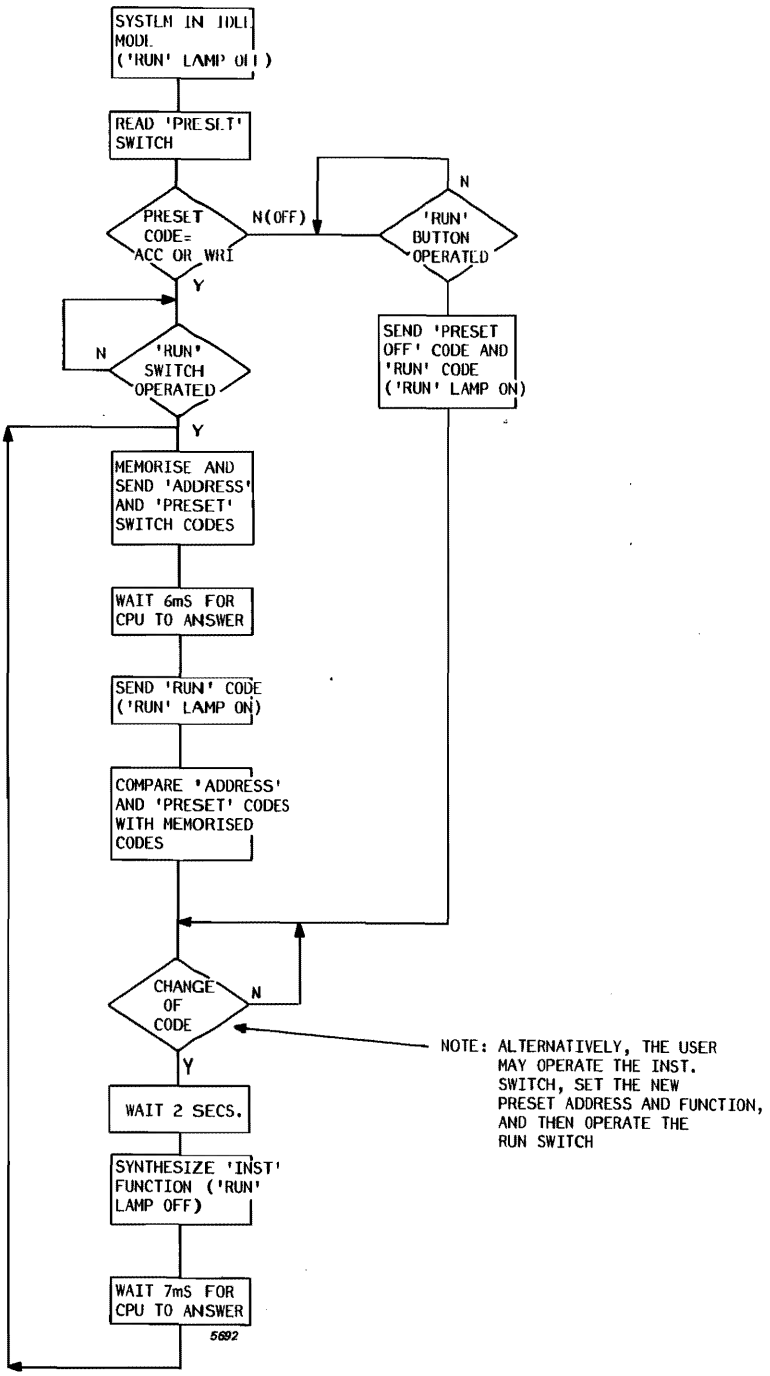

Figure 3.2 PRESET SELECT FLOW CHART

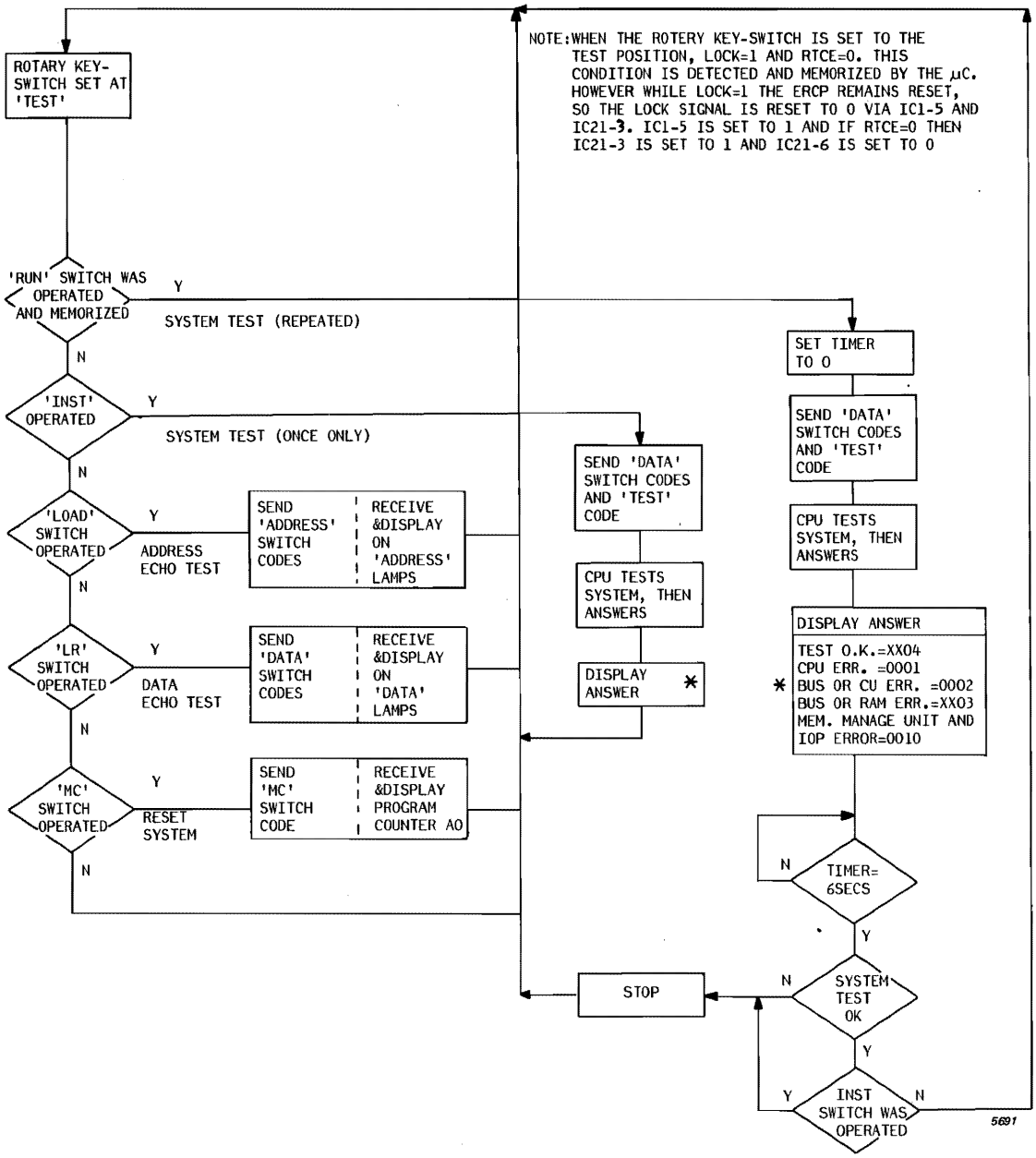

Figure 3.3 TEST FUNCTIONS FLOW CHART

4 DIAGRAMS

LIST OF ILLUSTRATIONS

FIGURE	4.1	ERCP CARD LAYOUT	PAGE 4-2
	4.2	ERCP CIRCUIT	4-3

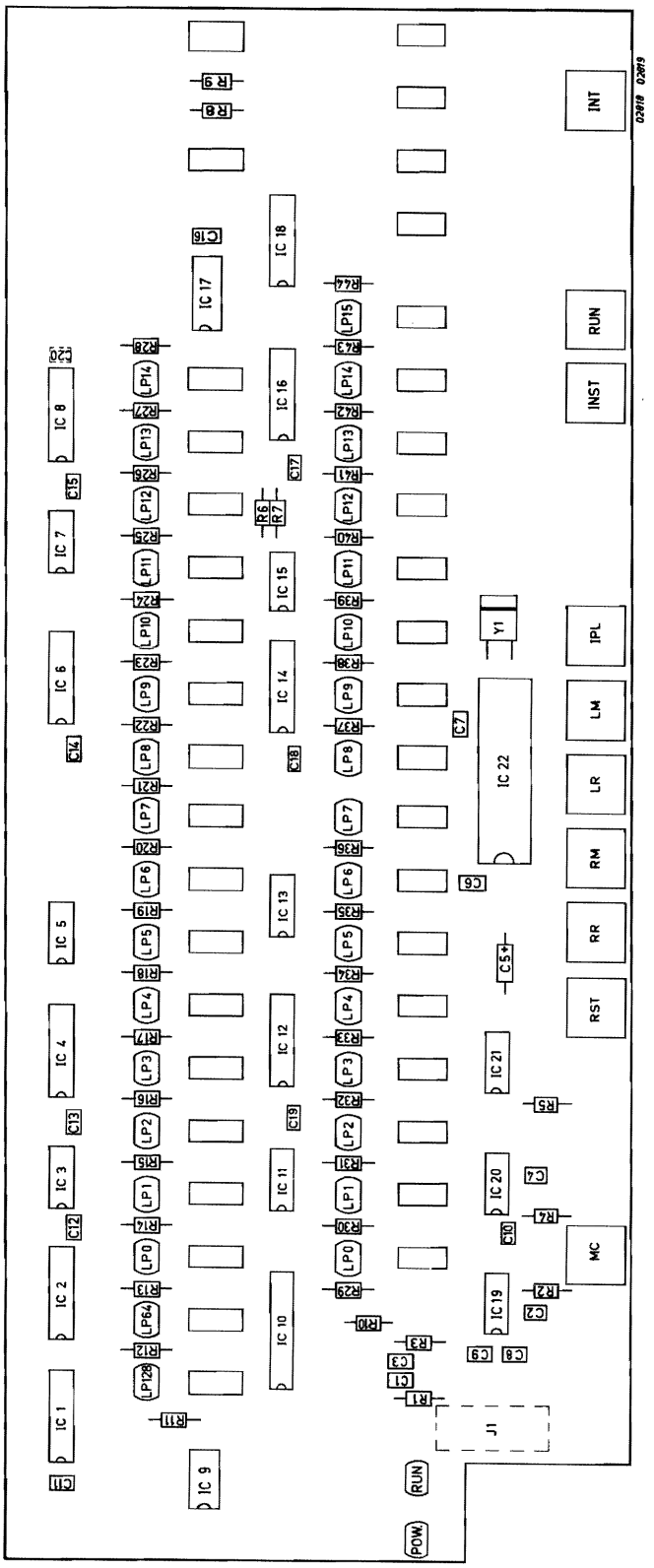

Figure 4.1 ERCP CARD LAYOUT

C8	10nF	IC19-14 (+12V/0V)		C13	10nF	IC4-20 (+5V/0V)	
C9	-	IC19-1 (-12V/0V)		C14	-	IC6-20	-
C10	-	IC20-14 (+5V/0V)		C15	-	IC8-20	-
C6	-	IC22-26	-	C16	-	IC17-16	-
C11	-	IC 1-20	-	C17	-	IC16-20	-
C12	-	IC 2-20	-	C18	-	IC14-20	-
				C19	-	IC12-20	-

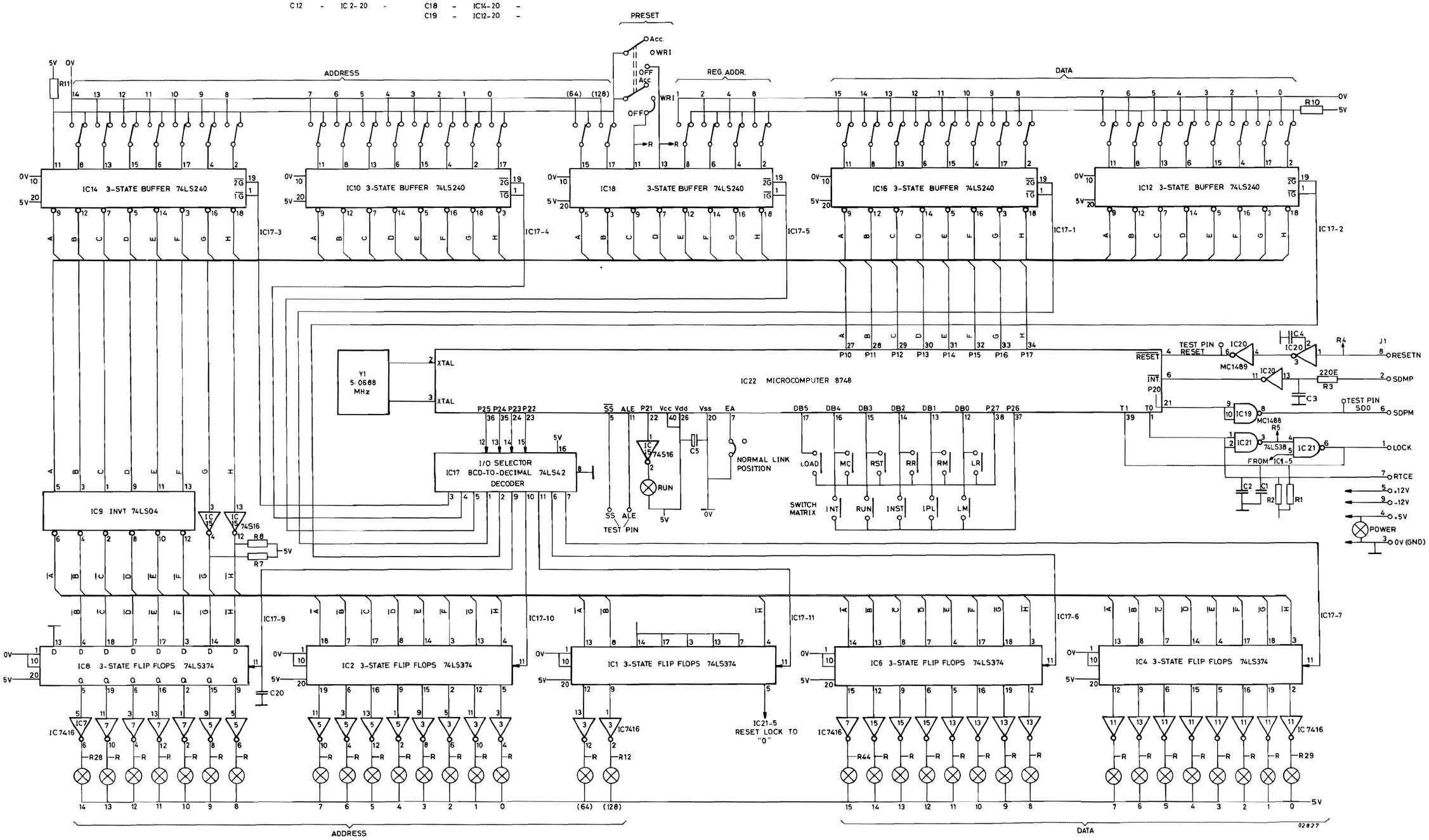

Figure 4.2 ERCP CIRCUIT

5 LISTINGS

Note: Since the microcomputer has internal RAM and ROM it is not easily accessed by a user. Also, the test facilities should provide a useful guide to troubleshooting. For these reasons a microprogram listing is not provided. However, if the listing is deemed to be essential a copy can be obtained from the publisher of this manual.

6 PARTS LIST

ERCP COMPONENT LAYOUT

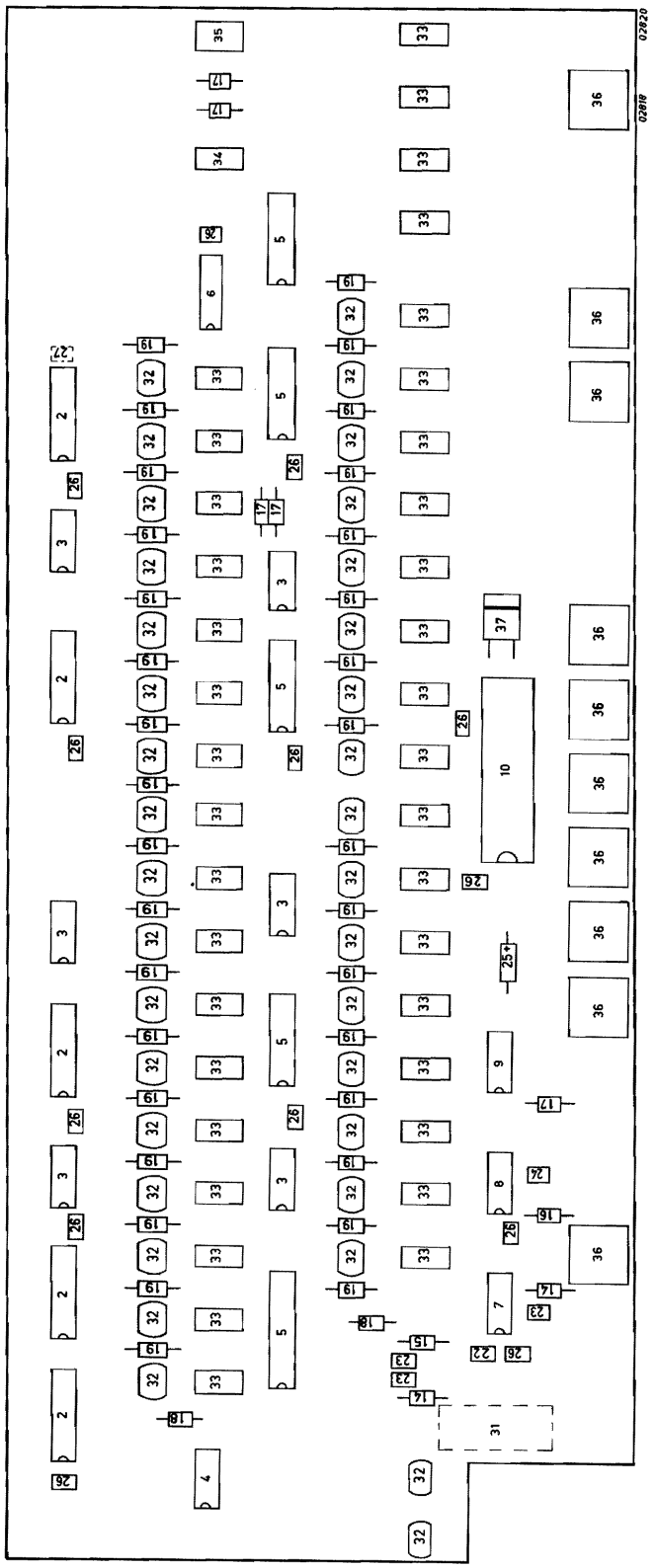

Pos.	Code Number	Description
1		PCB ERCP CARD
2	5111-000-03941	IC74LS374
3	5111-000-00101	IC7416
4	5111-000-02661	IC74LS04
5	5111-000-04091	IC74LS240
6	5111-000-03791	IC74LS42
7	5111-000-01871	ICMC1488AL
8	5111-000-01881	ICMC1489AL
9	5111-000-03691	IC74LS38
10	5111-010-05661	ICμC8748 (8048 with PROM)
14	2322-211-13102	Resistor 1K, 5%, 1/4W
15	2322-211-13221	Resistor 220Ω, 5%, 1/4W
16	2322-211-13271	Resistor 270Ω, 5%, 1/4W
17	2322-211-13472	Resistor 4.7K, 5%, 1/4W
18	2322-211-13471	Resistor 470Ω, 5%, 1/4W
19	2322-211-13331	Resistor 330Ω, 5%, 1/4W
23	2222-630-01392	Capacitor 3900pF, 100V, 10%
24	2222-630-01221	Capacitor 220pF, 100V, 10%
25	2222-015-16109	Capacitor 10μF 25V
26	2222-629-01103	Capacitor 10nF, 10%
27		Capacitor 470pF
31	2411-022-05128	Connector 9-way
32	9237-245-10181	Bulb 6V, 30mA (35 off)
33	2442-125-01196	Switch lever
34	2442-125-01359	Switch, biassed lever
35	2442-125-01361	Switch, 3-way lever
36	2412-128-02112	Switch, pushbutton, biassed
37	2411-535-01332	Quarty crystal 5.0688MHz, QA60

CONVERSION LIST

IDENTIFICATION CODE NUMBER	SERVICE CODE NUMBER	DESCRIPTION
2222 015 16109	4822 124 20697	CAP.10UF 25V
2222 629 01103	4822 122 30043	CAP.10NF CERPLAT .
2222 630 01102	4822 122 30027	CAP.1NF
2222 630 01221	4822 122 30094	CAP.220PF CERPLAT .
2222 630 01392	4822 122 30098	CAP.3900PF CERPLAT .
-		
2322 211 13102	4822 110 63107	RES. 1K 0,25W 5% .
2322 211 13221	4822 110 63089	RES.220E 0,25W 5% .
2322 211 13271	4822 110 63092	RES.270E 0,25W 5% .
2322 211 13331	4822 110 63094	RES.330E 0,25W 5% .
2322 211 13471	4822 110 63098	RES.470E 0,25W 5% .
-		
2322 211 13472	4822 110 63125	RES.4,7K 0,25W 5% .
2411 011 07257	5322 268 14116	PIN QW786
2411 470 01021	5322 256 34046	LAMP HOLDER 419 .
2411 535 01332	5322 242 74147	CRYSTAL 5,0688MHZ .
2412 128 02112	5322 271 34238	SWITCH CHER.M73-0100
-		
2422 125 01196	5322 277 14158	SWITCH 7101 LYCG .
2422 125 01359	5322 277 14151	SWITCH 7109 LYNCG .
2422 125 01361	5322 277 14303	SWITCH 7211 LYCG .
5111 000 00101	5322 209 84035	IC N7416N
5111 000 01871	5322 209 85621	IC COM1488
-		
5111 000 01881	5322 209 85619	IC 1489A
5111 000 02661	5322 209 85486	IC N74LS04A
5111 000 03691	5322 209 85605	IC N74LS38A
5111 000 03791	5322 209 85004	IC SN74LS42N-00
5111 000 03941	5322 209 85869	IC SN74LS37AN
-		
5111 000 04091	5322 209 85862	IC SN74LS240N
5111 199 66210	5322 216 25621	PCB.ERCP
9237 245 10181	4822 134 40302	LAMP.6V/30MA

END OF REPORT

7 TROUBLE-SHOOTING AND REPAIR

SECTION	7.1	ECHO ADDRESS TEST	PAGE 7-2
	7.2	ECHO DATA TEST	7-2
	7.3	SYSTEM TEST (ONCE ONLY)	7-2
	7.4	SYSTEM TEST (REPEATING)	7-2

7.1 ECHO ADDRESS TEST

1. Set rotary key-switch to TEST.
2. Push and release the MC button to reset the system.
3. Set address pattern on ADDRESS switches.
   (Up position of switch = logical 1, down position = logical 0).
4. Operate and release LOAD switch.
5. Check that ADDRESS lamps display the ADDRESS switch pattern.

7.2 ECHO DATA TEST

1. Set rotary key-switch to TEST.
2. Push and release the MC button to reset the system.
3. Set data pattern on DATA switches.
   (Up position of switch = logical 1, down position = logical 0).
4. Push and release LR button.
5. Check that DATA lamps display the DATA switch pattern.

7.3 SYSTEN TEST (ONCE ONLY)

1. Set rotary key-switch to TEST
2. Push and release the MC button to reset the system.
3. Push and release the INST button. The computer should execute the complete microdiagnostic program and should stop at the first test that produces an error or when all the tests have been executed correctly. (For TEST O.K. and TEST ERROR codes see Figure 3.3).

7.4 SYSTEM TEST (REPEATING)

1. Set rotary key-switch to TEST.
2. Push and release the MC buttom to reset the system.
3. Push and release the RUN button. The computer should repeatedly execute the complete microdiagnostic program until an error is produced or the INST button is pushed and released. (For TEST O.K. and TEST ERROR codes see Figure 3.3).