


Data
Systems

PHILIPS

# Field Support Manual

# Digital Extended Control Panel

# P843-510

A PUBLICATION OF
PHILIPS DATA SYSTEMS
APELDOORN, THE NETHERLANDS

PUB. NO. 5122 991 29971

DATE April 1981

Great care has been taken to ensure that the information contained in this handbook is accurate and complete. Should any errors or omissions be discovered, however, or should any user wish to make a suggestion for improving this handbook, he is invited to send the relevant details to:

PHILIPS DATA SYSTEMS
SERV. DOC. AND TRAINING DEPT.
P.O. Box 245, APELDOORN,
THE NETHERLANDS.

Copyright © by PHILIPS DATA SYSTEMS.
All rights strictly reserved. Reproduction or issue to third parties in any form whatever is not permitted without written authority from the publisher.

TABLE OF CONTENTS


| | | | |
|---|---|---|---|
| CHAPTER | 1 | GENERAL DESCRIPTION | PAGE 1-1 thru 1-4 |
| | 2 | FUNCTIONAL DESCRIPTION | 2-1 thru 2-6 |
| | 3 | DETAILED DESCRIPTION | 3-1 thru 3-7 |
| | 4 | DIAGRAMS | 4-1 thru 4-3 |
| | 5 | LISTINGS | 5-1 |
| | 6 | PARTS LIST | 6-1 thru 6-6 |
| | 7 | TROUBLE-SHOOTING AND REPAIR | 7-1 thru 7-3 |

# 1 GENERAL DESCRIPTION


| | | | |
|---|---|---|---|
| SECTION | 1.1 | INTRODUCTION | PAGE 1-2 |
| | 1.2 | PHYSICAL DESCRIPTION | 1-2 |
| | 1.3 | TECHNICAL DATA | 1-2 |
| | 1.3.1 | Performance Data | 1-2 |
| | 1.3.2 | Power Requirements | 1-2 |
| | 1.3.3 | Physical Characteristics | 1-2 |
| | 1.3.4 | Environmental Conditions | 1-2 |
| | 1.4 | INTERFACE | 1-3 |
| | 1.5 | APPLICATION NOTES | 1-3 |
| | 1.6 | INSTALLATION DATA | 1-3 |
| | 1.6.1 | Strap-options (see Fig. 1.1) | 1-3 |
| | 1.6.2 | Mounting | 1-3 |
| | 1.6.3 | Interconnections | 1-3 |
| | 1.6.4 | Compatibility | 1-3 |


## LIST OF ILLUSTRATIONS


| | | | |
|---|---|---|---|
| FIGURE | 1.1 | FRCP DETAILS | 1-4 |

## 1.1 INTRODUCTION (FIGURE 1.1)

The FRCP provides the controls and indicators that enable a user to operate and monitor the system. The pushbuttons are in two groups: the left-side group is used to select system functions; the right-side group to select hexadecimal address and data digits. The left-side indicator is mainly used to display memory and register addresses, the right-side indicator to display memory and register data.

## 1.2 PHYSICAL DESCRIPTION

The FRCP is available in two electronically identical but physically different versions: the local version, which is embedded in a standard rack panel; and the remote version, which is housed in a box and which can be used up to 10 metres away from the connecting panel.

Note: Before a remote FRCP is disconnected from the system, the LOCK button must be set rightward to the lock position.

## 1.3 TECHNICAL DATA

### 1.3.1 PERFORMANCE DATA

Serial Data Interface: V24/28: Transmission Rate = 4.8K baud
Logic Levels : logical 0 = +12V
: logical 1 = -12V

### 1.3.2 POWER REQUIREMENTS

| | | | |
|---|---|---|---|
| Voltage | : +5V ± 0.25V | +12V ± 1.2V | -12V ±1.2V |
| Current (max.) | : 800mA | 150mA | 20mA |

### 1.3.3 PHYSICAL DIMENSIONS

local version = 180mm X 130mm x 55mm
remote version = (t.b.f.)

### 1.3.4 ENVIRONMENTAL CONDITIONS

| | PARAMETER | OPERATIONAL | NON-OPERATIONAL |
|---|---|---|---|
| CLIMATIC | Temperature range<br>Temperature gradient<br>Pressure<br>Humidity without condensation | 0°C to 50°C<br>⩽ 1°C/mn<br>600mb to 1100mb<br>⩽ 90% | -30°C to 70°C<br>⩽ 1°C/mn<br>600mb to 1100mb<br>⩽ 90% |

| | PARAMETER | OPERATIONAL | NON-OPERATIONAL |
|---|---|---|---|
| MECHANICAL | Vibration | 1g or 0.25mm pk-to-pk/5Hz-150Hz | ditto |
| | Shock | 15g | ditto |

## 1.4 INTERFACE

| Pin No. | Signal | Function |
|---|---|---|
| J1-1 | LOCK | When LOCK = 1, FRCP is inhibited except for INT |
| 2 | SDMP | Serial Data Master to Panel |
| 3 | OV(GND) | |
| 4 | +5V | (for remote version, down to +4V ($V_{LINE}$) |
| 5 | +12V | Logic level 0 of serial data |
| 6 | SDPM | Serial Data Panel to Master |
| 7 | RTCE | Real Time Clock Enable (active at "1") |
| 8 | RESETN | Reset Not |
| 9 | -12V | Logic level 1 of serial data |

## 1.5 APPLICATION NOTES

In some applications, e.g. systems with less than 32K word main memories, the FRCP will be used with reduced facilities. For example, only the data display will be significant.

## 1.6 INSTALLATION DATA

### 1.6.1 STRAP-OPTIONS (SEE FIGURE 1.1)

### 1.6.2 MOUNTING

local version : Normally on the front panel of the system rack.

remote version : (t.b.f.)

### 1.6.3 INTERCONNECTIONS

local version: Normally by cable to a connector that is located on the outer edge of the CPU card.

remote version: (t.b.f.)

### 1.6.4 COMPATIBILITY

The FRCP is compatible with P857E (P854) and R (P858/9) systems. It is also compatible with some other systems but with reduced facilities e.g. as a substitute for the hand-held panel.

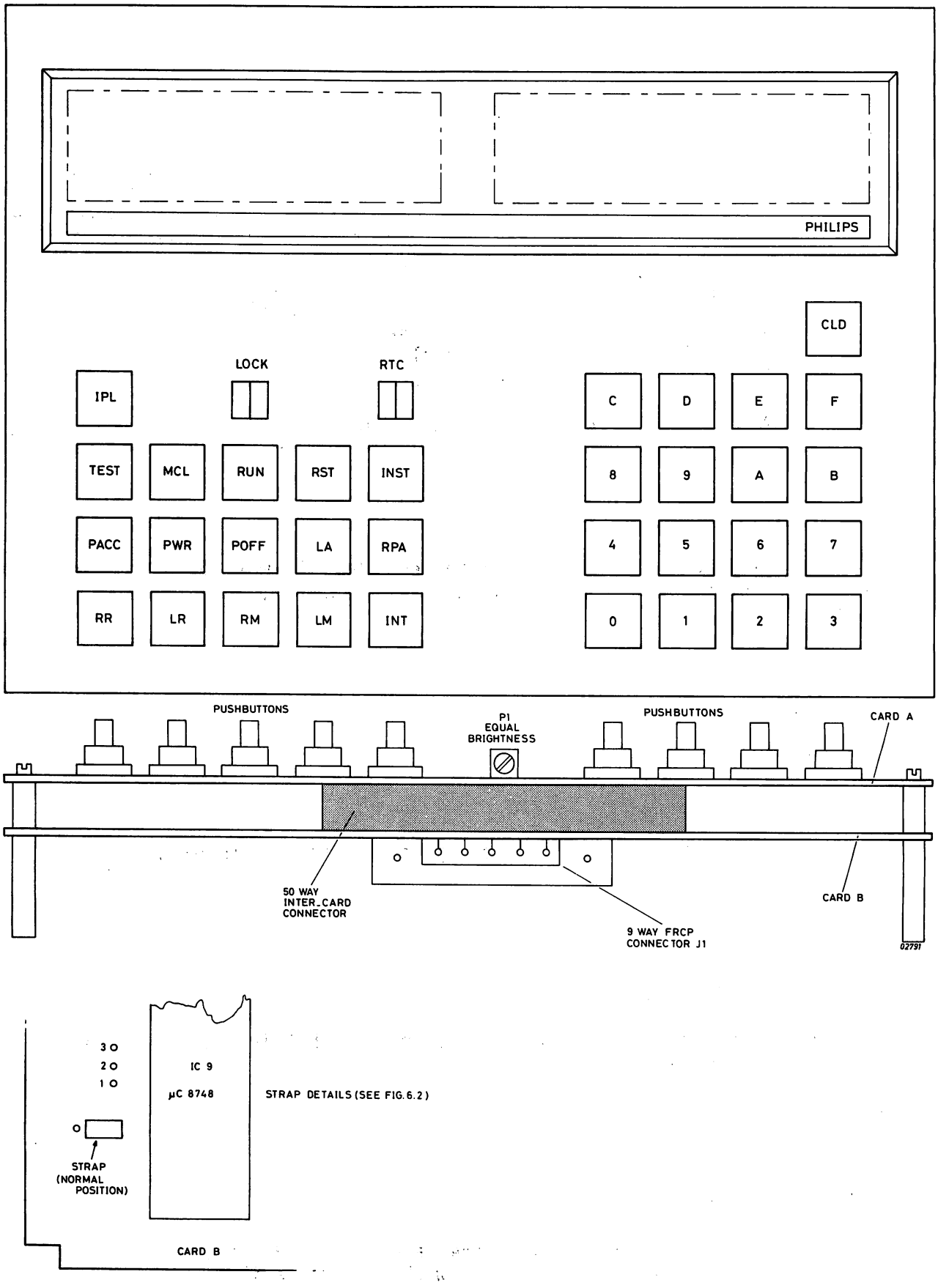


Figure 1.1 FRCP DETAILS

2 FUNCTIONAL DESCRIPTION

SECTION 2.1 FRCP FACILITIES PAGE 2-2

2.2 OPERATING PROCEDURES 2-2

2.3 FRCP CONFIGURATION 2-4

LIST OF ILLUSTRATIONS

FIGURE 2.1 FRCP BLOCK DIAGRAM 2-6

LIST OF TABLES

TABLE 2.1 FRCP FACILITIES 2-4

## 2.1 FRCP FACILITIES

The facilities provided by the FRCP are described in Table 2.1.

## 2.2 OPERATING PROCEDURES

### INITIAL PROGRAM LOADING

1. Key in the device parameters required by your system.
   (These will depend upon which IPL ROM is fitted)
2. Push the IPL button. (The CPU should switch to Run mode and 'run' should be displayed on the DATA display).

### STARTING A PROGRAM

1. Load the Instruction Counter (Register A0) with the starting address.
2. Push the RUN button ('run' should be displayed).

### STEPPING A PROGRAM

1. Load the Instruction Counter (Register A0) with the required starting address.
2. Push the INST button as required. At each step the ADDRESS display should display the address of the next instruction and the DATA display should display the current instruction.

### TESTING

Full details of test procedures are given in chapter 7.

### READ MEMORY

1. Key in the memory address, most significant digit first. (It is not necessary to key in leading zeros).
2. Push the LA button. The address should be displayed on the ADDRESS display with the most significant digit at the left.
3. Push the RM button. The data contained in the addressed memory location should be displayed on the DATA display, and the address on the ADDRESS display should be incremented by 2.
4. To read successive memory locations, push the RM button as required.

### READ REGISTER

1. Key in the register number.
2. Push the RR button. The register address should be displayed on the ADDRESS display and the contents of the selected register should be displayed on the DATA display.

READ STATUS

1. Push the RST button. The CPU status word should be displayed on the DATA display.

LOAD MEMORY

1. Key in the memory address.
2. Push the LA button. The memory address should be displayed on the ADDRESS display.
3. Key in the memory data.
4. Push the LM button. The address on the ADDRESS display should be incremented by 2 and the memory data should be displayed on the DATA display.
5. To load successive memory locations, repeat steps 3 and 4.

LOAD REGISTER

1. Key in the register number.
2. Push the RR button. The register number should be displayed on the ADDRESS display and the register contents should be displayed on the DATA display.
3. Key in the new register data.
4. Push the LR button. The address on the ADDRESS display should not change but the new data should be displayed on the DATA display.

STOP ON PRESET ADDRESS OPTION (IF AVAILABLE)

1. Check that 'run' is not displayed on the DATA display i.e. that the CPU is in Idle mode.
2. If 'run' is displayed go to step 3. If 'run' is not displayed go to step 4.
3. Push the INST button, check that 'run' is not displayed and go to step 4.
4. Key in the stop memory address.
5. Push either the PACC or the PWR button, as required.
6. Push the RUN button and check that 'run P' is displayed on the DATA display.
   * Depending on how the FRCP is being used, a new starting address may have to be loaded into the instruction counter.

The stop-on-preset-address facility can be inhibited by pushing the POFF button.

When there is coincidence between the preset address conditions and the memory accessing conditions the CPU should switch to Idle mode ('run' is extinguished) and the next instruction address and contents should be displayed on the ADDRESS and DATA displays.

Provide the CPU is in Idle mode, the RPA button can be pressed to display the stop-address on the ADDRESS display.

## 2.3 FRCP CONFIGURATION (FIGURE 2.1)

The FRCP consists of a microcomputer and switch matrix which operate together to generate serial function and data codes for onward transmission to the CPU. The address and data displays can be energized with the appropriate information, via buffers, registers etc. The FRCP can also receive information from the CPU.

A 40KHz oscillator is used to derive an a.c. drive for the display filaments. The oscillator output is also used to derive a +24V d.c. supply, and a +5V supply (necessary if the line voltage of the remote version is less than +5V).

| SWITCH | FUNCTION |
|---|---|
| 0 to F | To select hexadecimal address and data digits. |
| LOCK | When this switch is pushed rightward, all FRCP functions except INT are inhibited. The automatic restarting facility is enabled. |
| RTCE | When this switch is pushed rightward, the system Real Time Clock is enabled. |
| CLD | Clears ADDRESS and DATA displays to all zeros. |
| IPL | Initial Program Loader: An initial bootstrap program that is located in a hardware read-only-memory is loaded into memory word locations 000 to 255. |
| TEST | When this switch is operated at the same time as the '0' switch and provided the system microdiagnostic routine is loaded, the CPU will execute the system microdiagnostic routine. When it is operated alone all the segments of the ADDRESS and DATA displays will be lit. |
| MCL | Master Clear: Clears or resets most hardware logic. Usually activates the bus CLEARN signal. |
| RUN | Sets the CPU to RUN mode and inhibits all FRCP functions except INST and INT. The word 'run' in small letters is displayed on the DATA display. If the Stop On Preset Address option is being used the letter 'P' will be displayed as the extreme right-hand character of the DATA display. The preset stop address will be displayed on the ADDRESS display. |
| RST | Read Status: The contents of the program status word are displayed on the DATA display. |
| INST | Instruction Step: Each time INST is pressed, the CPU performs the one instruction indicated by the program counter and then halts. |
| PACC | Preset Access: Stop when any memory operation accesses the address that was keyed in before selecting the PACC function. |
| PWR | Preset Write: Stop when a write memory operation accesses the address that was keyed in before selecting the PWR function. |
| POFF | Inhibit the preset-stop-on-address function.<br><br>Note: The preset-stop-on-address function is optional and is not available on some systems. |

Table 2.1 FRCP FACILITIES

| SWITCH | FUNCTION |
|---|---|
| LA | Load Address: When this switch is operated, the keyed-in address code will be displayed on the ADDRESS display. This address is incremented by successive RM or LM operations. The LM button is pressed to load selected data. |
| RPA | Read Preset Address: When this switch is operated, and provided the CPU is in IDLE mode, the preset address will be displayed on the ADDRESS display. When the CPU is in the RUN mode, the INST button should be pressed followed by the RPA button. The RUN button must be pressed to restart the program. |
| RR | Read Register: When this switch is operated, the keyed-in register no. is displayed on the ADDRESS display and the contents of the register is displayed on the DATA display. |
| LR | Load Register: When this switch is operated, the keyed-in data is displayed on the DATA display. |
| RM(1) | Read Memory: When this switch is operated with the '0' switch, the address pointed to by the program counter A0 is displayed on the ADDRESS display and the contents of the address is displayed on the DATA display. |
| RM(2) | Read Memory: When this switch is operated alone, the contents of the Memory Address Register is displayed on the DATA display and the memory address +2 is displayed on the ADDRESS display. To read sequential memory locations RM is pushed as required. |
| LM(1) | Load Memory: When this switch is operated with the '0' switch, the address pointed to by the program counter A0 is displayed on the ADDRESS display and is loaded with the data that is displayed on the DATA display. |
| LM(2) | Load Memory: When this switch is operated alone, the memory address that is displayed on the ADDRESS display is loaded with the data that is displayed on the DATA display and the address is incremented by 2. |
| INT | Interrupt: When this switch is operated, the FRCP generates an operator's interrupt. |
| Note: | To distinguish between master-to-panel data and hand-entered data, the display of master-to-panel data is preceded by two small zeros e.g. □ □1625. When the preset-on-address function is operative, the display of master-to-panel data is preceded by 'P' and one small zero, e.g. P□1625. |

Table 2.1 FRCP FACILITIES (CONT.)

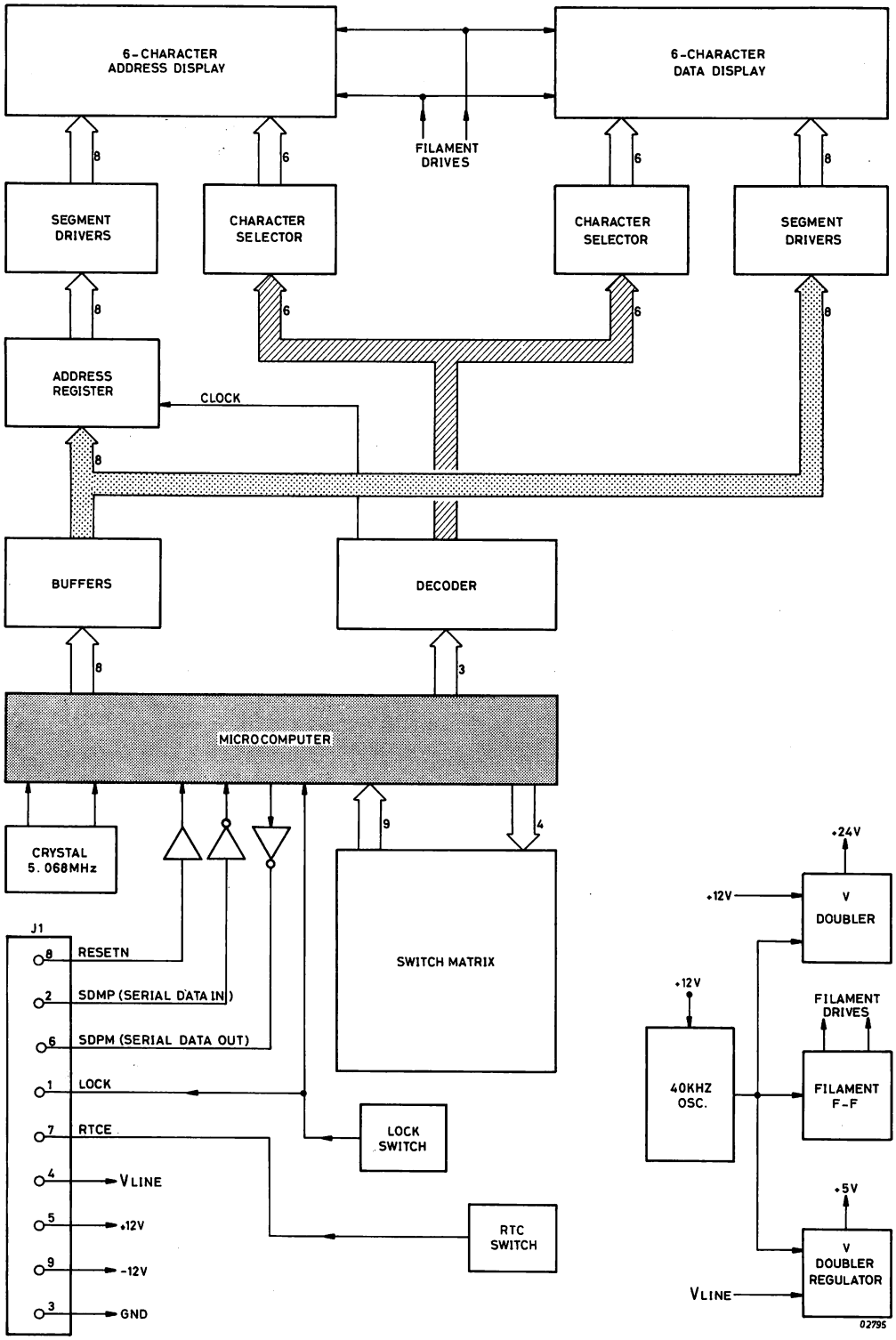


Figure 2.1 FRCP BLOCK DIAGRAM

# 3 DETAILED DESCRIPTION


| | | | |
|---|---|---|---|
| SECTION | 3.1 | DATA FORMATS | PAGE 3-2 |
| | 3.2 | FRCP OPERATIONS | 3-2 |
| | 3.3 | CIRCUIT DETAILS | 3-2 |
| | 3.3.1 | SDPM Output | 3-2 |
| | 3.3.2 | Display Filament Drivers | 3-2 |
| | 3.3.3 | Display Character Selection | 3-2 |
| | 3.3.4 | Display Segments Selection | 3-2 |
| | 3.3.5 | SDMP Input | 3-5 |
| | 3.3.6 | Voltage Doublers | 3-5 |
| | 3.3.7 | LOCK and RTCE Functions | 3-5 |
| | 3.3.8 | RESETN | 3-5 |


## LIST OF ILLUSTRATIONS


| | | | |
|---|---|---|---|
| FIGURE | 3.1 | SDPM FLOW CHART | 3-3 |
| | 3.2 | SDMP FLOW CHART | 3-4 |


## LIST OF TABLES


| | | | |
|---|---|---|---|
| TABLE | 3.1 | SERIAL DATA PANEL-TO-MASTER CODES | 3-6 |
| | 3.2 | SERIAL DATA MASTER-TO-PANEL CODES AND CODE FORMATS | 3-7 |

## 3.1 DATA FORMATS

Table 3.1 shows the hexadecimal codes for information that is sent to the CPU (SDPM). Table 3.2 shows the hexadecimal codes for information that is sent to the FRCP (SDMP) and also an example of a function character. Note that the formats of the memory address, register address and data codes sent to the FRCP are the same as the ones shown at the top of Table 3.1.

## 3.2 FRCP OPERATIONS

Since the µC has internal RAM and ROM the microprogram is not normally accessable, so it is not described in detail. However, flowcharts that show how the µC handles switch selections and encodes serial data (SDPM) and how it handles received data (SDMP) are shown in figure 3.1 and 3.2.

## 3.3 CIRCUIT DETAILS (FIGURE 4.3)

### 3.3.1 SDPM OUTPUT

When a function has been selected and encoded the SDPM output appears at IC9-24 and it is inverted to +12V logic levels in IC1.

### 3.3.2 DISPLAY FILAMENT DRIVERS

The 40KHz (nom.) output of IC11 is fed, via invertors IC4, to antiphase drivers in IC10, whose outputs drive bistable Q1-Q2. The outputs of the bistable provide a.c. supplies for the display filaments.

### 3.3.3 DISPLAY CHARACTER SELECTION

The outputs of IC9-21,22,23 are supplied to bcd-to-decimal decoder IC7, one of whose outputs is set to select the required character (G1 is the least significant character). Note that the output of IC7-1 is used as a clock signal.

The truth table of IC7 is shown below:

| inputs | | | | outputs | | | | | | |
|---|---|---|---|---|---|---|---|---|---|---|
| C | B | A | | 0 | 2 | 3 | 4 | 5 | 6 | 7 |
| 0 | 0 | 0 | | 0 | 1 | 1 | 1 | 1 | 1 | 1 |
| 0 | 0 | 1 | | 1 | 1 | 1 | 1 | 1 | 1 | 1 |
| 0 | 1 | 0 | | 1 | 0 | 1 | 1 | 1 | 1 | 1 |
| 0 | 1 | 1 | | 1 | 1 | 0 | 1 | 1 | 1 | 1 |
| 1 | 0 | 0 | | 1 | 1 | 1 | 0 | 1 | 1 | 1 |
| 1 | 0 | 1 | | 1 | 1 | 1 | 1 | 0 | 1 | 1 |
| 1 | 1 | 0 | | 1 | 1 | 1 | 1 | 1 | 0 | 1 |
| 1 | 1 | 1 | | 1 | 1 | 1 | 1 | 1 | 1 | 0 |

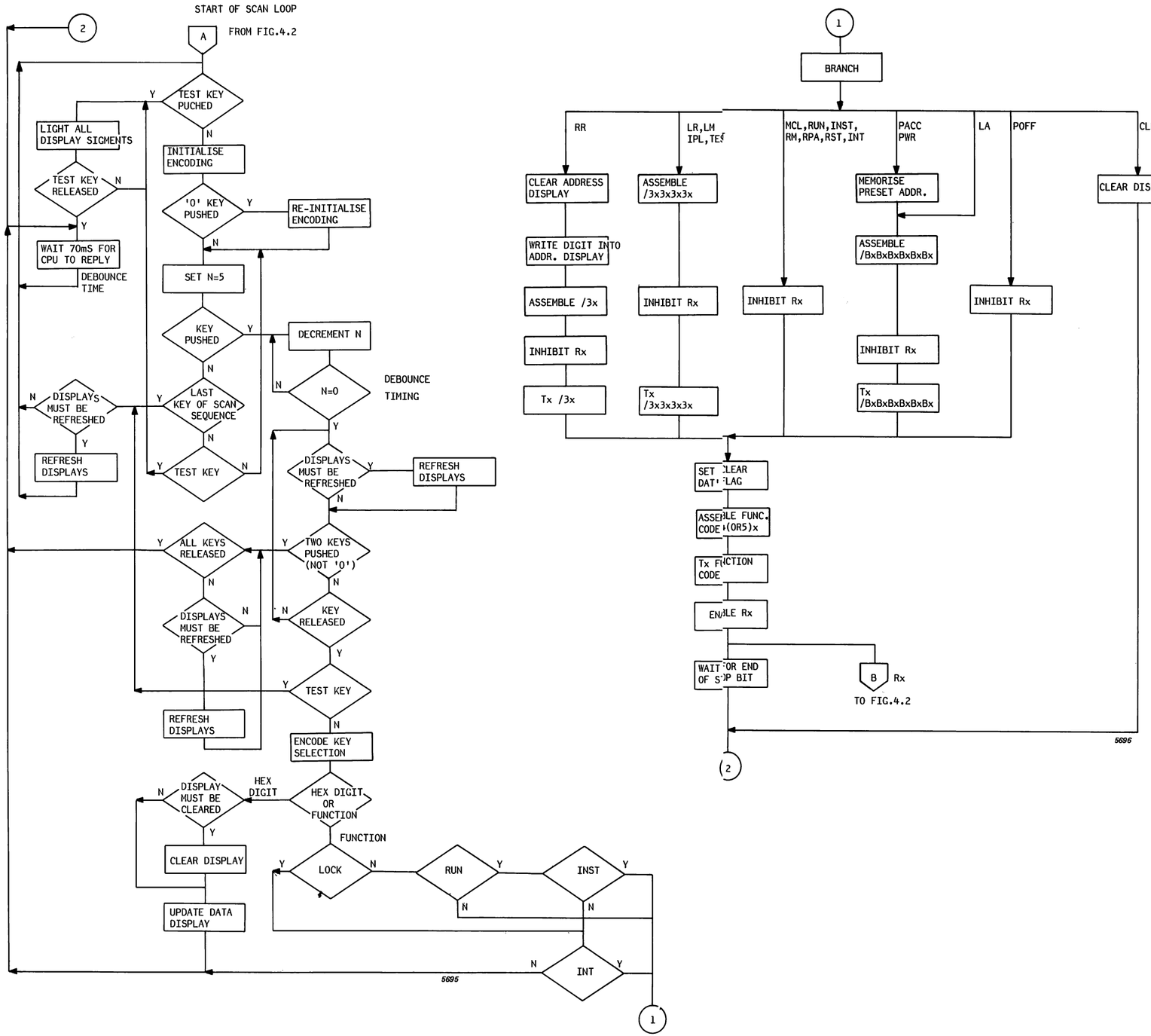





Figure 3.1 SDPM FLOW CHART

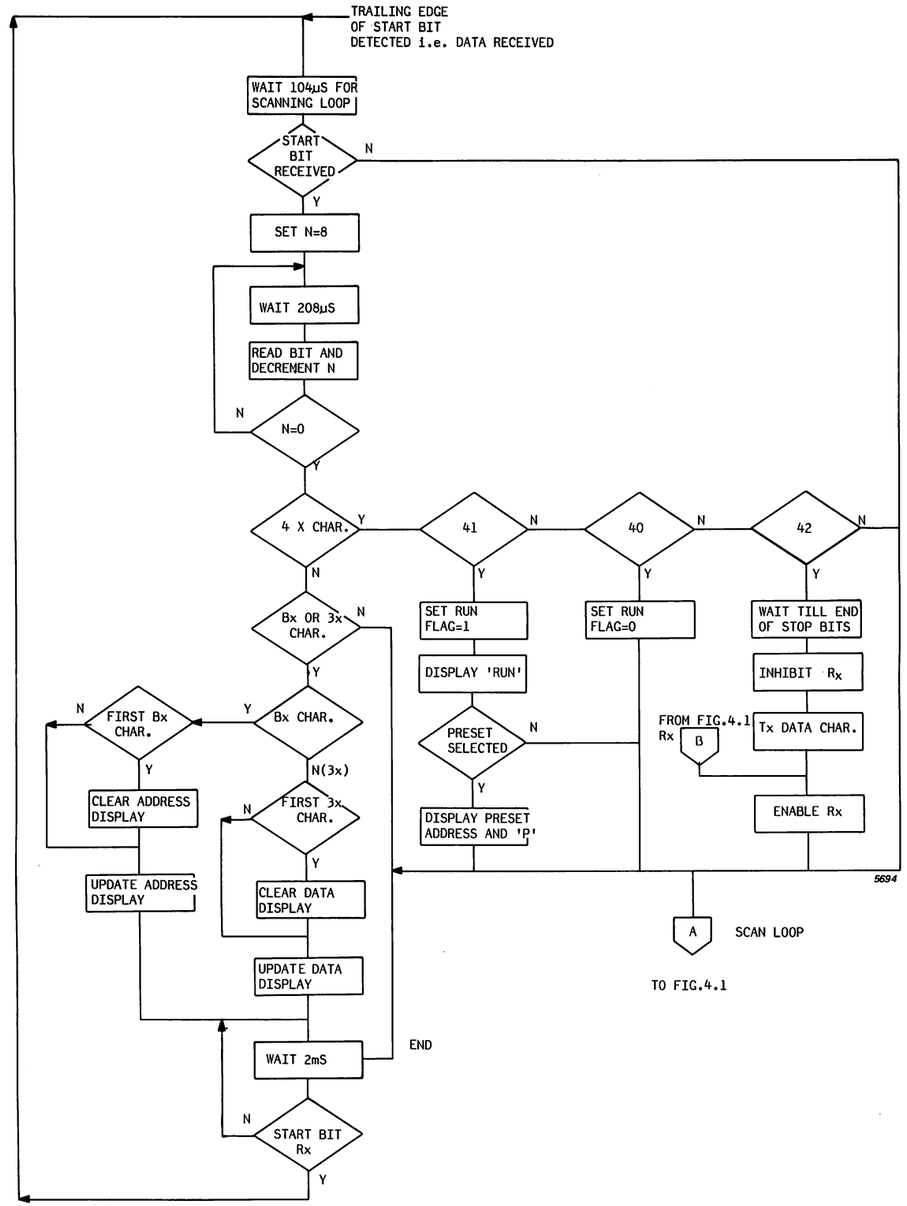


Figure 3.2 SDMP FLOW CHART

### 3.3.4 DISPLAY SEGMENTS SELECTION

The outputs of IC9-27 to 34 are used to select the required segments of the selected character. In the case of the DATA display this is simply achieved by feeding the IC9 outputs, via IC3/IC4, to segment drivers IC5. In the case of the ADDRESS display, output IC7-1 is used to clock the segment code into address register IC8 and the outputs of IC8 drive the address segments via IC6. Note that P1 can be used to equalize the brightness of the displays.

### 3.3.5 SDMP INPUT

Data received by the FRCP at J1-2 is slugged in R10-C2 and inverted to +5 logic levels in IC2.

### 3.3.6 VOLTAGE DOUBLERS

In each case the output of the oscillator is supplied to a switching transistor. When the transistor is on, one end of the inductor is held at about earth potential and the inductor can charge. When the transistor is off the inductor discharges, via the diode, to charge the capacitor. In the case of the +5V supply, regulator IC12 ensures that the output will be +5V over a range of input voltages.

### 3.3.7 LOCK AND RTCE FUNCTIONS

Each of these signals is set hi by pushing the appropriate switch rightward, which allows the line to pull-up to +5V.

### 3.3.8 RESETN

When this signal is set lo it is buffered in IC2 to drive the reset input of IC9. Diode D4 blocks positive-going noise and spikes. Diodes D4 and D5 together form on AND gate that sets the input conditions of IC2.

| SWITCH SELECTION: | HEXADECIMAL CODE: |
|---|---|
| 0 to F | Address: / Bx Bx Bx Bx Bx (leading zeros are not keyed in)<br>Red Addr. / 3x<br>Data: / 3x 3x 3x 3x (leading zeros are not keyed in)<br>where x is the selected hex. digit in the range 0 to F. |
| MCL | /40 |
| LR | /41 |
| RR | /42 |
| RST | /43 |
| IPL | /44 |
| LM(1) | /45 |
| LM(2) | /55 |
| INT | /46 |
| RM(1) | /47 |
| RM(2) | /57 |
| LA | /48 |
| INST | /49 |
| RPA | /4A |
| RUN | /4B |
| PACC | /4C |
| PWR | /4D |
| POFF | /4F |
| TEST | /4E |
| Serial Data Panel-to-Master Codes | |

Table 3.1 SDPM CODES

| FUNCTION NAME | FUNCTION | HEXADECIMAL CODE |
|---|---|---|
| RUNZO | CPU mode changed from RUN to IDLE | /40 |
| RUNZ1 | CPU mode changed from IDLE to RUN | /41 |
| TEST | Production testing only | /42 |

Serial Data Master-to-Panel Codes

Note: To distinguish between master-to-panel data and hand-entered data, the display of master -to-panel data is preceded by two small zeros e.g.: □□1625.
When the preset stop-on-address function is operative, the display of master-to-panel data is preceded by 'P' and one small zero e.g.: P□1625.

HEXADECIMAL CODE FORMAT

1 start bit, 8 character bits, 2 stop bits

EXAMPLE:

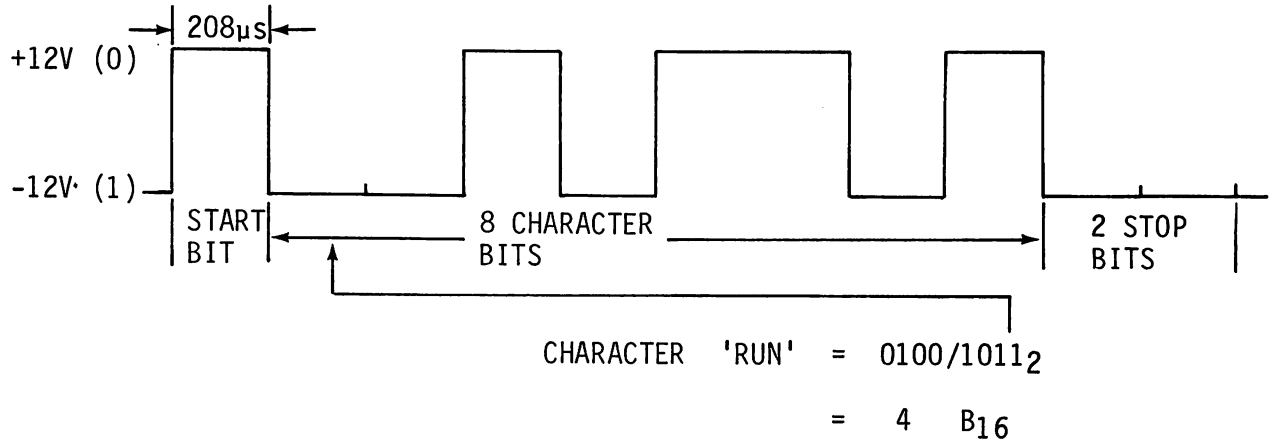


Note that the least significant bit is transmitted first.

Table 3.2 SDMP CODES AND CODE FORMATS

4 DIAGRAMS

## LIST OF ILLUSTRATIONS


| | | | |
|---|---|---|---|
| FIGURE | 4.1 | FRCP CARD LAYOUT A | PAGE 4-2 |
| | 4.2 | FRCP CARD LAYOUT B | 4-2 |
| | 4.3 | FRCP CIRCUIT | 4-3 |

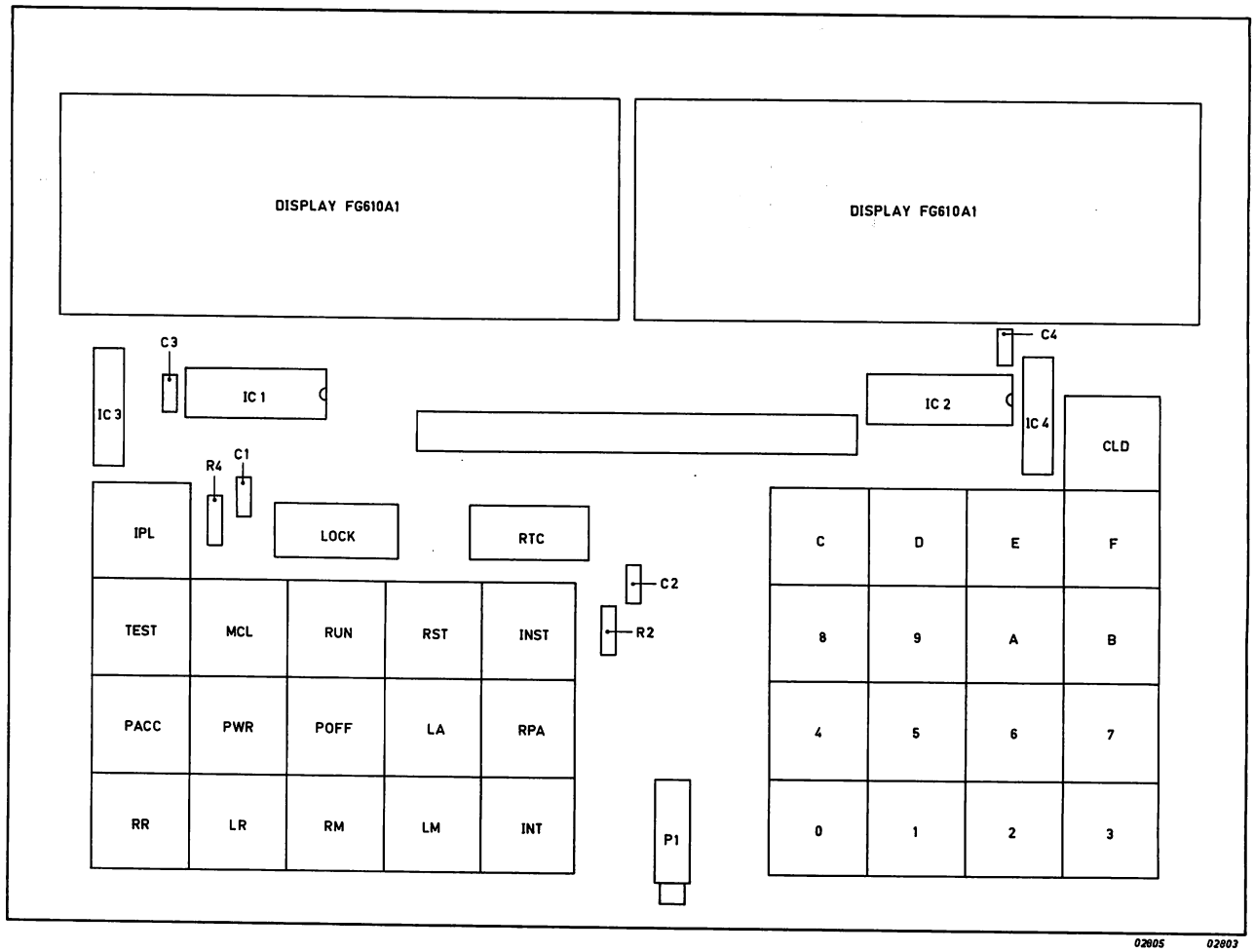


Figure 4.1 FRCP CARD LAYOUT A

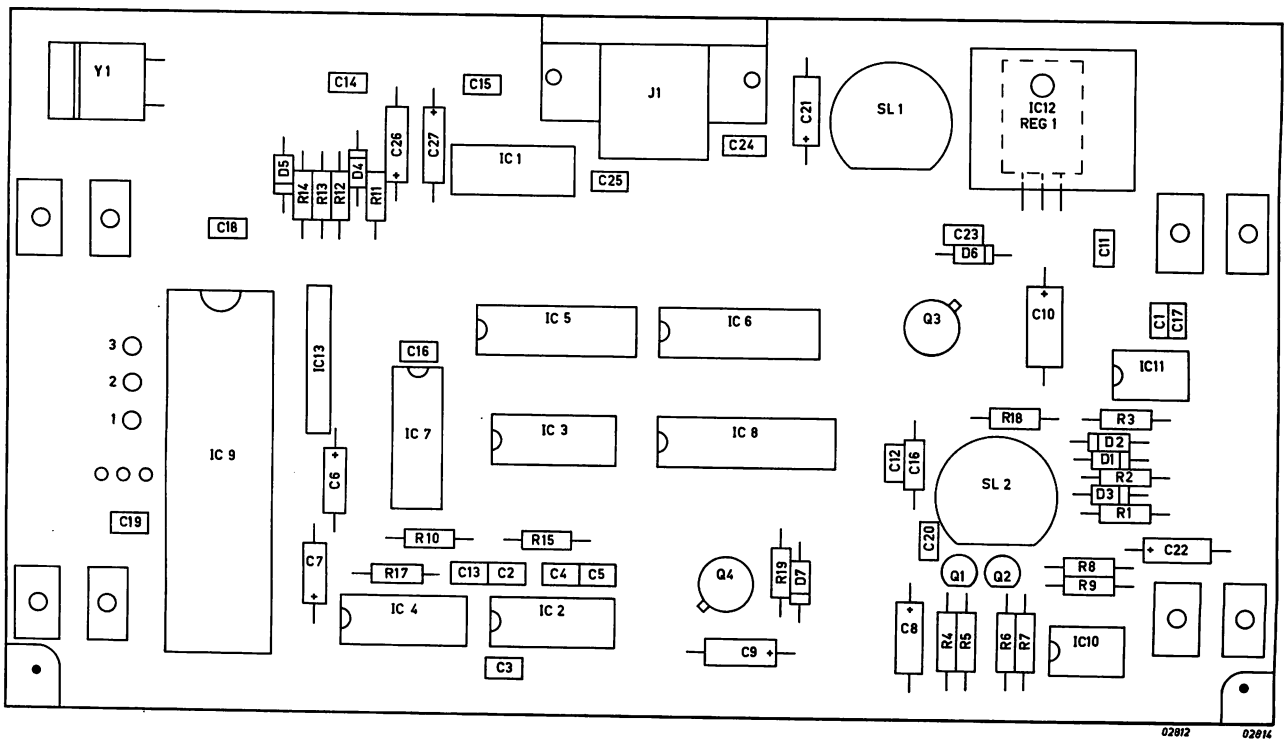


Figure 4.2 FRCP CARD LAYOUT B

CARD A

ADDRESS DISPLAY 610A1

A.C FILAMENT DRIVERS

DATA DISPLAY 610A1

SEGMENT DRIVERS IC6 UDN 6118A

CHARACTER SELECTOR IC1 7406

6x4K7 IC3

6x4K7 IC4

P1 EQUAL BRIGHTNESS

C3 C4 1K +5V 24V GND

CHARACTER SELECTOR IC2 7406

SEGMENT DRIVERS IC5 UDN 6118A

+20V +5V 0V

R16_4K7

ADDRESS REG IC8 74LS273

C12 10nF

CLR CLK

IC2 C4 220pF

R15_220 C5 3.9nF

BUFFERS IC3 74LS04

74LS04 IC4 R17_4K7

BCD_TO_DECIMAL DECODER IC7 74LS42

CARD B

ALE SS EA STRAP Vcc Vss Vdd

C7 10µF C19 10nF C18 10nF

A B C D E F G H DP

MICROCOMPUTER IC9 8748

P10 P11 P12 P13 P14 P15 P16 P17 P20 P21 P22

XTAL1 XTAL2 RESET INT P23 T1 T0 DB0 DB1 DB2 DB3 DB4 DB5 DB6 DB7 P24 P25 P26 P27

CRYSTAL Y1 5.068 MHz

IC2 MC 1489

C3 220pF

R13_15K D5 R12_4K7 +5V

R14_100K C6 10µF D4 R11_270 +5V

CONN J1

RESETN SDMP SDPM LOCK RTCE VLINE +12V -12V 0V

R10_220 C2 3.9nF

IC1 MC 1488

C24 3.9nF C25 3.9nF

VLINE (+4V min.) C21 47µF

+12V -12V GND (0V)

5 x 4K7 TO +5V IC13

PACC RR LR IPL MCL RUN TEST PWR

RM LM INT RST INST POFF LA RPA

0 6 3 2 CLD F A B 7

4 5 1 C D E 8 9

R1_1K +5V LOCK

R2_1K +5V RTC

CARD A

+24V C8 10µF C9 33µF D7 L1 +12V VOLTAGE DOUBLER Q4 R19_390

C23_10nF L2 VLINE +5V IC12 REG µA7805C C11 0.1µF D6 C10 33µF Q3 VOLTAGE DOUBLER R18_120

+12V R1_12K R2_12K D1 D2 C1 1nF 40KHz OSC IC11 NE555 TIMER C17 10nF

VLINE R8_10 R4_4K7 R6_4K7 R9_10 Q1 FILAMENT FLIP FLOP Q2 R7_470 +5V R5_470 IC10 75451B IC4 74LS04 IC4 D3 +5V R3_1K

02023

Figure 4.3 FRCP CIRCUIT

# 5 LISTINGS

Note: Since the microcomputer has internal RAM and ROM it is not easily accessed by a user. Also, the test facilities provide a useful guide for trouble-shooting.
For these reasons a microprogram listing is not provided. However, if the listing is thought to be necessary, a copy of it can be obtained from the publisher of this manual.

# 6 PARTS LIST

# FRCP CARD A COMPONENT LAYOUT

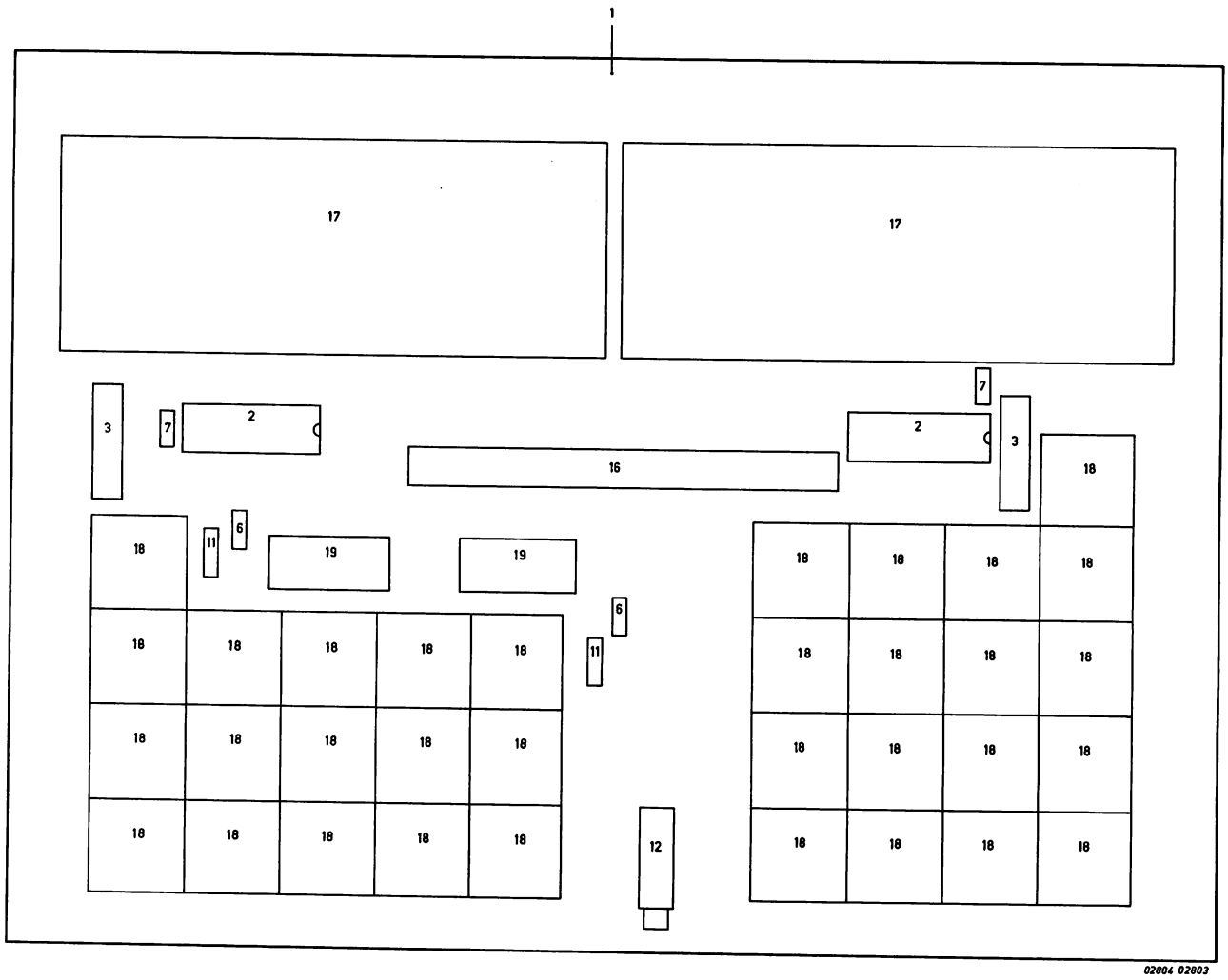

| Pos. | Code Number | Description |
|---|---|---|
| 1 | | PCBN FRCP CARD A |
| 2 | 5111 000 00621 | IC7406 |
| 3 | 5111 000 05421 | IC 6x4K7 Resistors |
| 6 | 2222 630 01392 | Capacitor 3900pF, 100V, 10% |
| 7 | 2222 629 01103 | Capacitor 10µF, 10% |
| 11 | 2322 211 13102 | Resistor 1K, 0.25W, 5% |
| 12 | 2122 011 00019 | Potentiometer 1K |
| 16 | | Connector 50 pins |
| 17 | 9330 873 20682 | Display |
| 18 | 2411 124 14045 | Switch (push button) |
| 19 | 2411 128 02024 | Switch (sliding) |

# FRCP CARD B COMPONENT LAYOUT

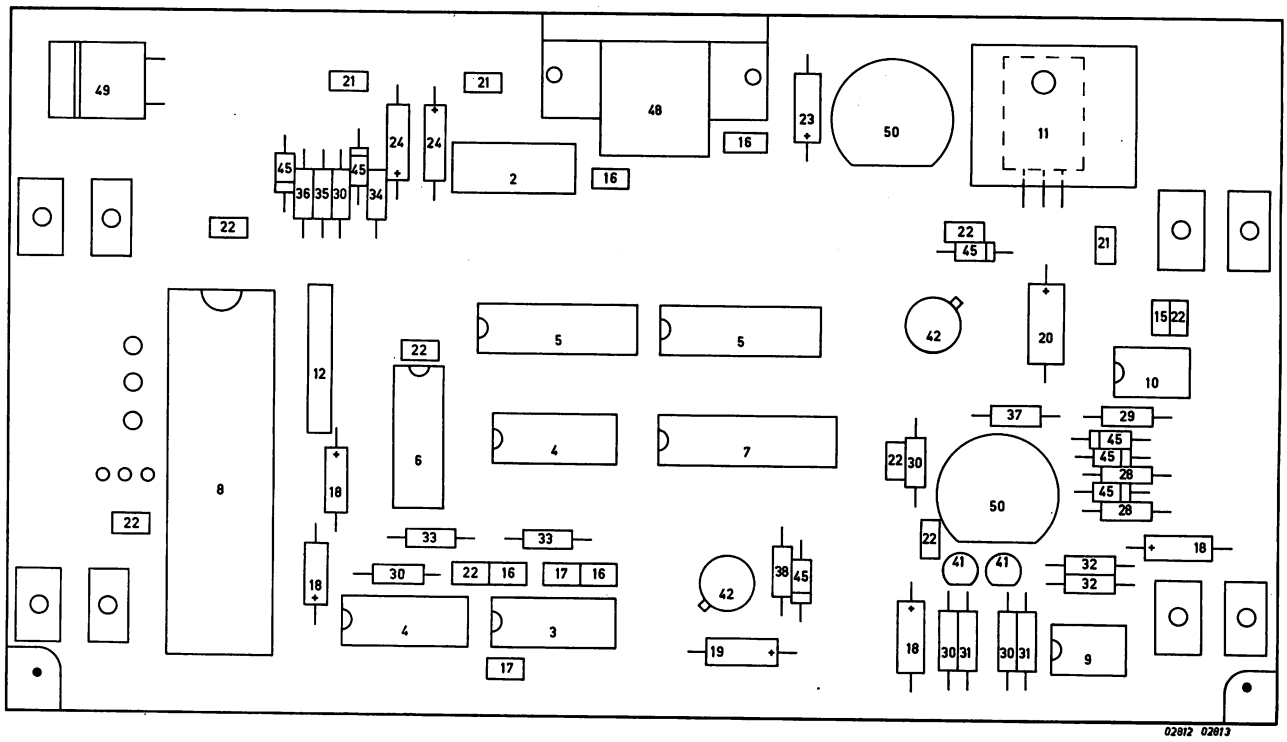

| Pos. | Code Number | Description |
|---|---|---|
| 1 | | PCB FRCP CARD B |
| 2 | 5111 000 01871 | IC MC1488AL |
| 3 | 5111 000 01881 | IC MC1489AL |
| 4 | 5111 000 02661 | IC 74LS04 |
| 5 | 5111 000 05281 | IC UDN6118A |
| 6 | 5111 000 03791 | IC 74LS42 |
| 7 | 5111 000 03911 | IC 74LS273 |
| 8 | 5111 010 05472 | IC 8748 |
| 9 | 5111 000 02071 | IC 75451B |
| 10 | 5111 000 02471 | IC NE555 |
| 11 | 5111 000 02331 | IC 7805C |
| 12 | 5111 000 05421 | IC 6x4.7KΩ |
| 15 | 2222 630 01102 | Capacitor 1nF 10% |
| 16 | 2222 630 01392 | Capacitor 3.9nF 10% 100V |
| 17 | 2222 015 01221 | Capacitor 220pF 10% 100V |
| 18 | 2222 015 16109 | Capacitor 10µF 25V |
| 19 | 2222 015 17339 | Capacitor 33µF 40V |
| 20 | 2222 016 16479 | Capacitor 47µF 25V |
| 21 | 2022 522 00602 | Capacitor 0,1µF |
| 22 | 2222 629 01103 | Capacitor 0.01µF 10% |
| 23 | 2222 015 14479 | Capacitor 47µF 10V |
| 24 | 2222 015 15478 | Capacitor 4.7µF 16V |
| 28 | 2322 211 13123 | Resistor 12K 1/4W 5% |
| 29 | 2322 211 13102 | Resistor 1K 1/4W 5% |
| 30 | 2322 211 13472 | Resistor 4.7K 1/4W 5% |
| 31 | 2322 211 13471 | Resistor 470 1/4W 5% |
| 32 | 2322 151 51009 | Resistor 10 1/8W 1% |
| 33 | 2322 211 13221 | Resistor 220 1/4W 5% |
| 34 | 2322 211 13271 | Resistor 270 1/4W 5% |
| 35 | 2322 211 13153 | Resistor 15K 1/4W 5% |
| 36 | 2322 211 13104 | Resistor 100K 1/4W 5% |
| 37 | 2322 211 13121 | Resistor 120 1/4W 5% |
| 38 | 2322 211 13391 | Resistor 390 1/4W 5% |
| 41 | 9334 640 00112 | Transistor 2N4402 |
| 42 | 9330 283 50112 | Transistor BSX60 |
| 45 | 9333 341 80112 | Diodes BAX12A |
| 48 | 2422 025 02307 | Connector 9 way |
| 49 | 2411 535 01332 | Crystal 5.0688 MHz QA60 |
| 50 | 5111 010 03761 | Inductor 1.1 mH 3761 |

| IDENTIFICATION CODE NUMBER | SERVICE CODE NUMBER | DESCRIPTION |
|---|---|---|
| 2122 011 00019 | 5322 103 10023 | POTENTIOMETER 1K . |
| 2222 015 16109 | 4822 124 20697 | CAP.10UF 25V FITCO . |
| 2222 015 17339 | 4822 124 20712 | CAP.33UF 40V FITCO . |
| 2222 016 16101 | 4822 124 20701 | CAP 100F 16V |
| 2222 344 21334 | 4822 121 40257 | CAP.0,33UF 100V 10%. |
| 2222 344 90002 | 5322 121 44328 | CAP.0,1 UF 100V 10%. |
| 2222 629 01103 | 4822 122 30043 | CAP.10NF 10% |
| 2222 630 01102 | 4822 122 30027 | CAP. 1000PF 10% CER. |
| 2222 630 01221 | 4822 122 30094 | CAP. 220PF 10% CER. |
| 2222 630 01392 | 4822 122 30098 | CAP.3900PF 100V 10%. |
| 2322 151 51009 | 5322 116 50452 | RES. 10E 0,125W 1% . |
| 2322 211 13102 | 4822 110 63107 | RES.1K 0,25W 5% . |
| 2322 211 13104 | 4822 110 63161 | RES.100E 0,25W 5% . |
| 2322 211 13121 | 4822 110 63083 | RES.120E 0,25W 5% . |
| 2322 211 13123 | 4822 110 63136 | RES. 12K 0,25W 5% . |
| 2322 211 13221 | 4822 110 63089 | RES.220E 0,25W 5% . |
| 2322 211 13271 | 4822 110 63092 | RES.270E 0,25W 5% . |
| 2322 211 13391 | 4822 110 63096 | RES.390E 0,25W 5% . |
| 2322 211 13471 | 4822 110 63098 | RES.470E 0,35W 5% . |
| 2322 211 13472 | 4822 110 63125 | RES.4,7K 0,25W 5% . |
| 2411 011 07257 | 5322 268 14116 | PIN QW786 |
| 2411 024 13001 | 5322 268 94029 | JUMPER DCW06 |
| 2411 124 14045 | 5322 276 14412 | SWITCH PUSH MDP . |
| 2411 128 02024 | 5322 277 24091 | SLIDER SWITCH 51MP . |
| 2411 535 01332 | 5322 242 74147 | CRYSTAL 5,0688MHZ . |
| 2422 062 02512 | 5322 267 74062 | CONNECTOR F095 |
| 5111 000 00621 | 5322 209 84073 | IC N7406N |
| 5111 000 01871 | 5322 209 85621 | IC COM1488 |
| 5111 000 01881 | 5322 209 85619 | IC 1489A |
| 5111 000 02071 | 5322 209 86391 | IC.75451B |
| 5111 000 02471 | 5322 209 85824 | IC SE555N |
| 5111 000 02661 | 5322 209 85486 | IC N74LS04A |
| 5111 000 03791 | 5322 209 85004 | IC SN74LS42N-00 |
| 5111 000 03911 | 5322 209 85792 | IC N74LS273N |
| 5111 000 05261 | 5322 255 44217 | IC.MOUNTING 40PINS . |
| 5111 000 05281 | 5322 209 86416 | IC.UDN 6118A |
| 5111 000 05421 | 5322 111 94239 | RES.NETWORK 6X4,7K . |
| 5111 010 03761 | 5322 157 54084 | CHOKE SLF 3761 |
| 5111 199 66310 | 5322 216 25626 | FRCP ASSY |
| 9300 859 90682 | 5322 130 94028 | DISPLAY FG510 A1 . |
| 9330 042 10112 | 4822 130 30084 | DIODE AAZ18 |
| 9330 283 50112 | 5322 130 44019 | TRANSISTOR BSX60 |
| 9333 341 80112 | 5322 130 34605 | DIODE BAX12A |
| 9334 640 00112 | 5322 130 44835 | TRANSISTOR 2N4402 . |

END OF REPORT

# 7 TROUBLE-SHOOTING AND REPAIR


| | | | |
|---|---|---|---|
| SECTION | 7.1 | SYSTEM TEST | PAGE 7-2 |
| | 7.2 | TEST FRCP DISPLAYS | 7-2 |
| | 7.3 | TEST FRCP DISPLAY SEGMENTS | 7-2 |
| | 7.4 | TROUBLE-SHOOTING HINTS | 7-2 |
| | 7.4.1 | Microcomputer Cycle | 7-2 |
| | 7.4.2 | Dim Displays | 7-2 |
| | 7.4.3 | Same Digit on Both Displays is Only Digit Lit | 7-3 |
| | 7.4.4 | Address Display Shows Only Most Significant Digit | 7-3 |
| | 7.4.5 | Both Displays Not Working | 7-3 |
| | 7.4.6 | Transmit or Receive Failure | 7-3 |

## 7.1 SYSTEM TEST

1. Load the appropriate test code into the DATA display
2. Simultaneously push the TEST and 0 buttons
3. Note the display indications
4. Refer to system handbook for explanations of success/error codes.

## 7.2 TEST FRCP DISPLAYS

1. Push MCL button
2. Push TEST button
3. Check that all display segments and points are lit
4. Release TEST button
5. Push MCL button
6. Key in 8888
7. Push LA button
8. Check that ADDRESS display shows □08888
9. Key in 8888
10. Push LM button
11. Check that DATA display shows □□8888 and ADDRESS display shows □0888A)
12. Push CLD button
13. Check that the DATA display shows zeros

## 7.3 TEST DISPLAY SEGMENTS

1. Key in 8080
2. Push LA button
3. Check that ADDRESS display show □08080
4. Key in 0808
5. Push LM button
6. Check that DATA display shows □□ 0808
7. Push MCL button
8. Check that display show zeros
9. Key in 0808
10. Push LA button
11. Check that ADDRESS display shows □00808
12. Key in 8080
13. Push LM button
14. Check that DATA display shows □□8080 (and ADDRESS display shows □0080A)
15. Push MCL button
16. Check that display show zeros

## 7.4 TROUBLE-SHOOTING HINTS

### 7.4.1 MICROCOMPUTER CYCLE

1. Monitor Test Pin 1 (IC4-6) with an oscilloscope
2. The output (when the µC is running) should be as shown below:

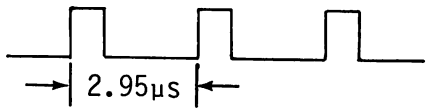

### 7.4.2 DISPLAYS DIM

1. Monitor Q4 collector
2. If it is stuck at +12V the transistor is faulty

### 7.4.3 SAME DIGIT ON BOTH DISPLAYS IS ONLY DIGIT LIT

1. Push MCL to reset μC

### 7.4.4 ADDRESS DISPLAY SHOWS MOST SIGNIFICANT DIGIT ONLY

1. Signal RESETN or μC reset input is stuck at 0V

### 7.4.5 BOTH DISPLAYS NOT WORKING

1. Check +12V supply

### 7.4.6 TRANSMIT OR RECEIVE FAILURE

1. Monitor IC1-8 with an oscilloscope
2. Check that data is being sent to the system

Note: The data is asychronous so it will probably not be possible to examine the codes in detail.

3. Monitor IC2-11
4. Check that data is being received from the system.