Field Support Manual
Flexible Disc Control Unit (F1MZ)
P830-150
PTS6751-002

Equipment Shelf
P830-010



Data
Systems

PHILIPS

A PUBLICATION OF
PHILIPS DATA SYSTEMS
APELDOORN, THE NETHERLANDS

PUB. NO. 5122 991 30512

DATE April 1985

Great care has been taken to ensure that the information contained in this handbook is accurate and complete. Should any errors or omissions be discovered, however, or should any user wish to make a suggestion for improving this handbook, he is invited to send the relevant details to:

PHILIPS DATA SYSTEMS
SERV. DOC. AND TRAINING DEPT.
P.O. Box 245
7300 AE APELDOORN.
THE NETHERLANDS.

Copyright © by PHILIPS DATA SYSTEMS.
All rights strictly reserved. Reproduction or issue to third parties in any form whatever is not permitted without written authority from the publisher.

SERVICE MANUAL STATUS RECORD

TITLE : P830-150 Flexible Disc Control Unit (F1MZ)

PUBLICATION NUMBER : 5122 991 3051X

PUB. NO. 12TH DIGIT	UPDATE PACKAGE	SI. NO.	PAGES AFFECTED	DATE	REMARKS
1		P830-C-019	6-3, 6-4 5-1	8110	Re-issue of manual with technical corrections on pages 6-3 and 6-4 (in consequence of the implementation of SI P830-C-019) and an administrative one on page 5-1.
2		P830-C-026	All	8501	Revision. Up until M05219. F1MZ levels.

TABLE OF CONTENTS

CHAPTER	1	GENERAL DESCRIPTION	PAGE 1-1 thr. 1-11
	2	FUNCTIONAL DESCRIPTION	2-1 thr. 2-31
	3	DETAILED DESCRIPTION	3-1 thr. 3-31
	4	DIAGRAMS	4-1 thr. 4-7
	5	RESERVED	
	6	PARTS LISTS	6-1 thr. 6-8
	7	TROUBLE SHOOTING AND REPAIR	7-1 thr. 7-5
	8	EQUIPMENT SHELF P830-010	8-1 thr. 8-12

1 GENERAL DESCRIPTION

SECTION	1.1	INTRODUCTION	PAGE 1-2
	1.2	PHYSICAL DESCRIPTION	1-2
	1.3	TECHNICAL DATA	1-2
	1.3.1	Performance Data	1-2
	1.3.2	Power Requirements	1-2
	1.3.3	Environmental Conditions	1-2
	1.4	INTERFACE	1-5
	1.5	APPLICATION NOTES	1-5
	1.5.1	Configuration	1-5
	1.5.2	Initial Program Loading	1-5
	1.5.3	Power Failure/Automatic Restart	1-5
	1.5.4	Drive Control	1-5
	1.6	INSTALLATION DATA	1-6
	1.6.1	Strap Settings	1-6
	1.6.2	Mounting	1-6
	1.6.3	Break and Discrete Interrupt Connections	1-6
	1.6.4	Binary Coded Interrupts	1-6
	1.6.5	Drive Connections	1-7
	1.6.6	Compatibility	1-7

LIST OF DIAGRAMS

FIGURE	1.1	POSITION OF CU IN THE SYSTEM	1-3
	1.2	LAYOUT OF CU CARD	1-4

LIST OF TABLES

TABLE	1.1	DISC DRIVE CHARACTERISTICS	1-8
	1.2	BUS CONNECTIONS	1-9
	1.3	CONNECTIONS TO FLOPPY DISC DRIVES	1-10
	1.4	TEST CONNECTOR SIGNALS	1-11

1.1 INTRODUCTION

The control unit transfers data between the system and either CDC 9404 Floppy or CDC 9406 floppy disc drives. The CU operates via the GP Bus-Simplified or the UPL Bus on IOP channel only. Up to four 'daisy chain' connected drives can be interfaced with one CU but the drives must all be of the same type (see figure 1.1). CDC 9406 drives may be supplied with or without door lock option, the connection requirements are different in these two cases, refer to paragraph 1.6.5. The characteristics of the two types of drives are given in table 1.1.

The CU performs the following functions:
. Input/output of 16 bit parallel data into memory via the system bus.
. Serial/parallel conversion of data with CRC word generation and checking.
. Input/output of serial data to disc drives with data encoding and decoding.
. Control of disc 'read-write' operation.
. Status word generation.

1.2 PHYSICAL DESCRIPTION

The CU is implemented on one double sided printed circuit card of the double Eurocard format. The card is fitted with an F068 type connector which mates with connectors mounted on the back panel of the main chassis and which provides the interface with the bus. See figure 1.2.

1.3 TECHNICAL DATA

1.3.1 PERFORMANCE DATA

For use with CDC 9404 drive
Throughput : 250 K bits/sec
Recording Mode : FM (double frequency)

For use with 9406
Throughput : 500 K bits/sec - or - 250 K bits/sec
Recording Mode : MFM (double density) FM

1.3.2 POWER REQUIREMENTS

Voltage: +5 V ± 5%
Current: 1.55 amps

1.3.3 ENVIRONMENTAL CONDITIONS

Maximum ambient temperature range : 0 - 50°C
Note: For the disc drives this is only 10 - 38°C

Maximum relative humadity : 90%

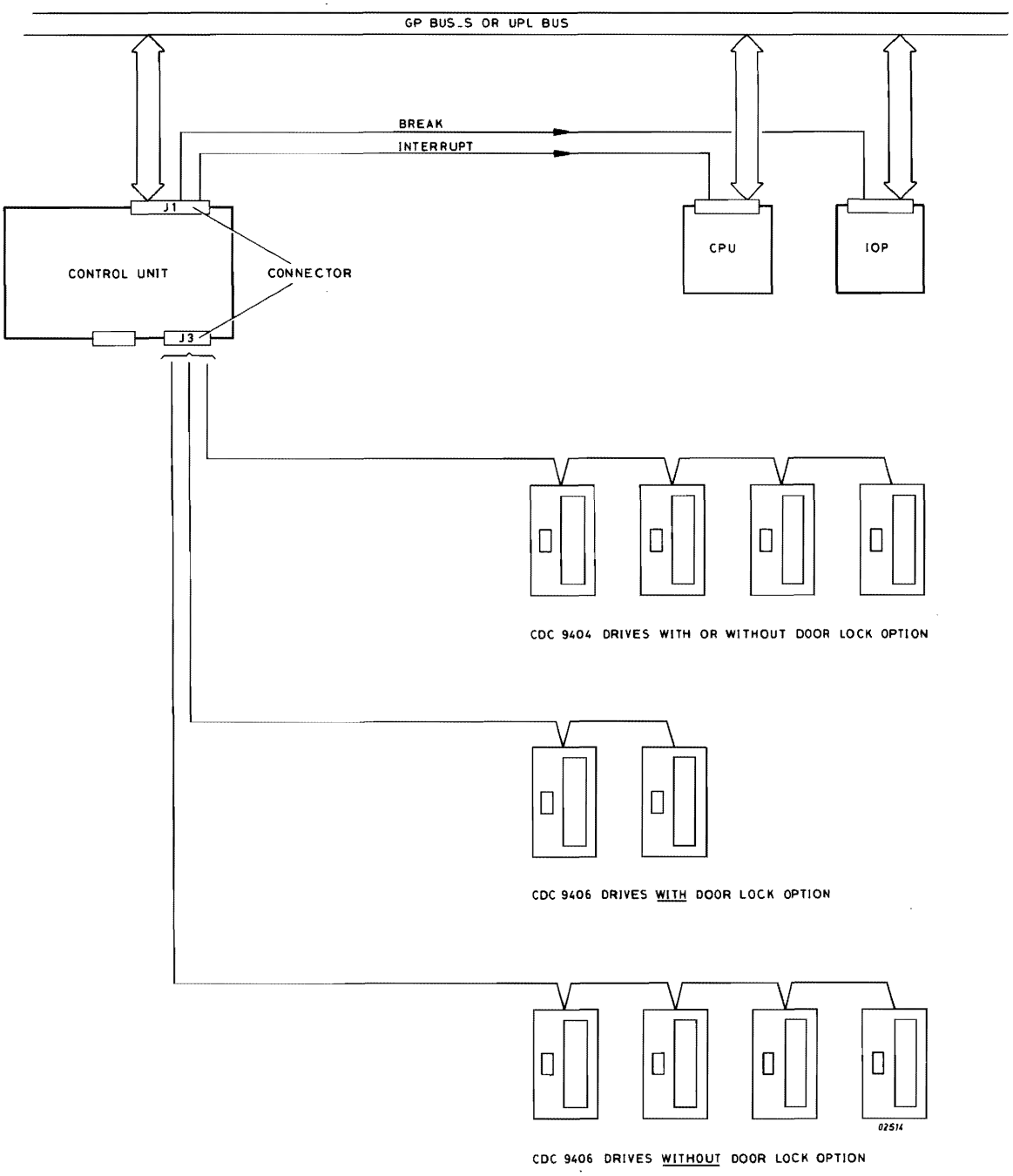

Figure 1.1 POSITION OF CU IN THE SYSTEM

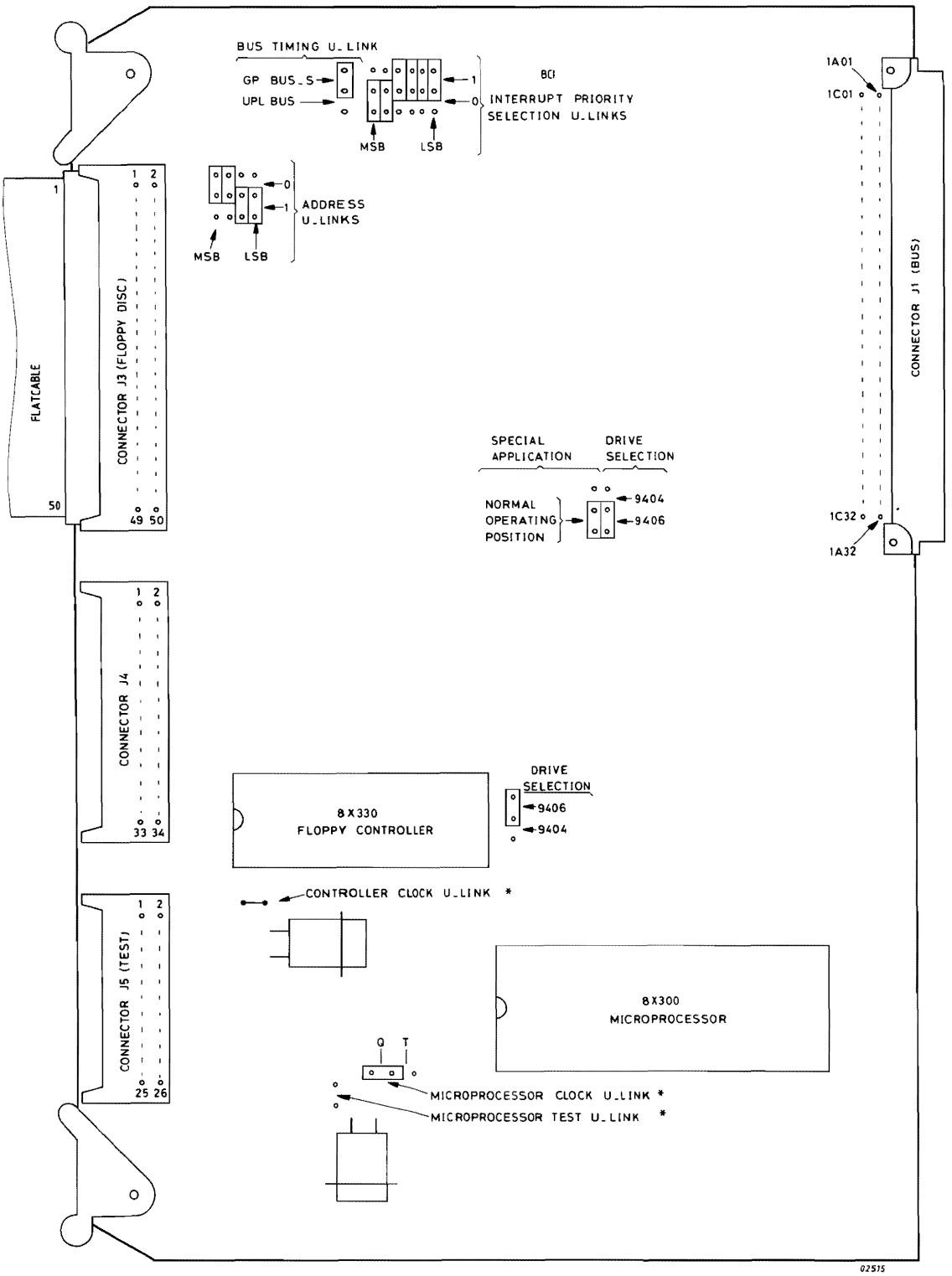

* = MANDATORY POSITION

Interrupt U-links for priority level 15 (001111) on BCI
Address U-link shown for CU address 3 (0011)
Bus timing link shown for use of CU with GPBS timing
Drive selection links (2) for use with type 9406 drive
Special application link shown in its normal operating position
Microprocessor clock link shown in position for normal operation
Controller clock link normally fitted, microprocessor test link not normally fitted.

Figure 1.2 LAYOUT OF CU CARD

1.4 INTERFACE

The CU communicates with the system via the bus. Discrete interrupts and break connections are made with jump leads on the back panel (the binary coded interrupt used with the UPL bus is a bussed signal). The connections are made via connector J1, see table 1.2.

The CU communicates with the drives via connector J3, see table 1.3. The connector J4 is provided for future developments. Both these connectors are mounted on the front edge of the card, see figure 1.2.

A fourth connector also mounted on the front of the card, J5, is provided for test purposes, see table 1.4. A coincidence tool or a logic analyser can be connected.

1.5 APPLICATIONS NOTES

1.5.1 CONFIGURATION

The CU puts the disc drives into communication with the rest of the system via the bus. Figure 1.1 shows the place of the CU in the system.

1.5.2 INITIAL PROGRAM LOADING

The IPL can be loaded from floppy disc using the standard P800 bootstrap (P843-053 sequential and disc bootstrap). The control panel data switches must be positioned as follows;

0	1	2	3	4 5 6 7	8	9	10 11	12 13 14 15
0	1	1	0	Sector No. (0-15)	1	1	Drive No.	CU Address

With this bootstrap the IPL is loaded from cylinder 0, head 0. This track is always formatted with format 0 (single density, 26 sectors/track and 128 bytes/sector).

1.5.3 POWER FAILURE/AUTOMATIC RESTART

The CU and disc drive will be restarted after a power failure without operator action. Information on the disc will not be destroyed but a sector of the disc being written when a power failure occurs must be completely rewritten after the CU is restarted.

1.5.4 DRIVE CONTROL

Up to four drives may be controlled from a single CU but all drives must be of the same type. The drives cannot operate simultaneously, a command for one drive must be finished before a command for another drive is sent by the CPU.

1.6 INSTALLATION DATA

1.6.1 STRAP SETTINGS (refer to figure 1.2)

U-Links on the card are used to select;

- CU address
- Binary interrupt priority level (when binary coded interrupts are used)
- Bus timing for exchange timing signal TSMN
- Drive type selection
- Special Applications
  These U-links are set at system installation time. Two other U-links are provided for test purposes.
- Microprocessor test U-links, not normally fitted.
- Microprocessor clock input selection, set at position 'Q' during normal operation of the card. Set at position 'T' for testing the card.
- Disc controller chip clock input U-link, fitted during normal operation of the card. Removed when the card is under test.

1.6.2 MOUNTING

The CU card is mounted in a slide in the main chassis. Connector J1 on the card mates with a connector on the back panel of the chassis and the card is held in place with two plastic safety catches. The slide position for mounting the card is chosen at system installation time and is given in the configuration sheets provided with the system.

1.6.3 BREAK AND DISCRETE INTERRUPT CONNECTIONS

These are dedicated connections made by a jump leads between the CU connector on the back panel of the main chassis and the CPU (interrupt) or IOP (break) connectors. The connections at the CPU and IOP connectors determine the priority level of the CU and are chosen at system installation time.
Interrupt IRN is situated at pin 1A05.
Break signal BRN is situated at pin 1A05.

1.6.4 BINARY CODED INTERRUPTS

When the CU is used with the UPL Bus a binary coded interrupt may be used.
In this case an Interrupt Handler Chip (IHC) must be ordered separately and plugged into the empty socket at position A3 on the card. The interrupt priority level is then selected with the six U-links as described at para 1.6.1 above.
The jump lead connection for the discrete interrupt request is not fitted in this case.

1.6.5 DRIVE CONNECTIONS

Drives are connected to the CU via a multi-wire flat cable. A 50 wire cable connects between connector J3 and the CDC drives.
The cable must be connected so that pin 1 of each connector is connected to the same wire of the cable. A red line printed along one edge of the cable may be used as a reference. The maximum total cable length is 7.6 metres (25 feet).
The last drive only in the daisy chain must have a terminating network connected on its printed circuit card. The drive number is selected with U-links on the drive printed circuit card.

The two types of disc drive may be supplied with or without door lock option. When operating with type 9404 drives the CU controls four door lock lines, corresponding to the four door lock lines of each drive.

Note: Each door lock line is 'daisy chain' connected between the CU and each drive but only one line is effective for a given drive, being selected with a 'door lock' U-link on the drive printed circuit board. This U-link must correspond with the 'drive number' U-link, also mounted on the drive pcb.

Thus four drives type 9404 (with or without door lock option) can be controlled from a single CU.
When operating with type 9406 drives the CU again controls four door lock lines, but the drives have only two door lock line inputs. Thus only two type 9406 drives with door lock option can be connected in daisy chain. The drive numbers in this case must be chosen as 0 and 1 (at CU level) ie. 1 and 2 (at drive level) and must correspond to the door lock number.

Four drives type 9406 without doorlock option can be controlled from a single CU.

Remark: The capacity of the CU to control four door lock lines while operating with type 9406 drives provides the possibility in special applications to control four drives (with door lock option) but with a modified connecting cable (which is not a true daisy chain) and special positio-tioning of the U-links on the drive pcb's. These actions are left entirely to the user's discretion and responsibility.

Table 1.3 gives a list of the lock signals at the drive interface.

1.6.6 COMPATIBILITY

The CU can be used with any system based on the GP Bus-Simplified or on the UPL bus. The input/out command coding is chosen so that the soft-ware designed for use with the X1250 control unit (FXD) and with this CU are fully compatible.
However, since the FXD has a smaller range of functions it will not respond to all commands designed for the F1MZ.

DISCETTE COMPATIBILITY

Single Density:

IBM compatibility is guaranteed. (Recoverable errors less than 1 in 10^9 bits transferred; unrecoverable errors less than 1 in 10^{12} bits transferred.

Double Density:

Due to differences between IBM and CDC drives, the error rate will be higher when reading IBM discettes. (CDC have announced a recoverable rate of 1 in 10^8 bits transferred for tracks 0 to 74, and slightly more for tracks 75 and 76).

Experience shows that the quality of the discette (i.e. choice of manufacturer) has a big influence on the results.

Interlaced Discettes:

It will be possible to use Hardware interlaced discettes.

	CDC9404 Single Density 1 side	CDC9406 Double Density 2 sides
Capacity (unformatted) (formatted and excluding spare tracks and track 00) - format 0 - format 1 - format 2	401,016 bytes 246,272 bytes	1,604,064 bytes 246,272 bytes 985,088 1,212,416
Number of discs Number of heads Tracks/surface (including spares)	1 1 77	1 2 77
Transfer rate Recording method	250K bits/sec. (4uS/bit) FM (double frequency)	500K bits/sec (2uS/bit) MFM (or 250K bits/sec FM)
Disc speed Latency time (1/2 revolution) Seek time - track to track - maximum Settling time Random average seek time (inc. settling time) Head load time	360 rpm 83 ms 10 ms 760 ms 10 ms 260 ms 60 ms	360 rpm 83 ms 3 ms 228 ms 20 ms 96 ms 40 ms

Table 1.1 DISC DRIVE CHARACTERISTICS

J1 - UPL Bus Connector Pinning

PIN NUMBER	SIGNAL NAME	PIN NUMBER	SIGNAL NAME	PIN NUMBER	SIGNAL NAME
1C01		1B01		1A01	
1C02		1B02		1A02	
1C03	BCI	1B03		1A03	INCL
1C04		1B04		1A04	
1C05	IRON*	1B05		1A05	BRON*
1C06	0V	1B06		1A06	0V
1C07		1B07		1A07	RSLN
1C08	CLEARN	1B08		1A08	ACN
1C09	0V	1B09		1A09	0V
1C10	TMPN	1B10		1A10	TSMN
1C11		1B11		1A11	
1C12	0V	1B12		1A12	0V
1C13		1B13		1A13	
1C14		1B14		1A14	MAD03
1C15	MAD04	1B15		1A15	
1C16		1B16		1A16	
1C17	MAD08	1B17		1A17	MAD09
1C18	MAD10	1B18		1A18	MAD11
1C19	MAD12	1B19		1A19	MAD13
1C20	MAD14	1B20		1A20	MAD15
1C21		1B21		1A21	
1C22	0V	1B22		1A22	0V
1C23	BIO08N	1B23		1A23	BIO00N
1C24	BIO09N	1B24		1A24	BIO01N
1C25	BIO10N	1B25		1A25	BIO02N
1C26	BIO11N	1B26		1A26	BIO03N
1C27	BIO12N	1B27		1A27	BIO04N
1C28	BIO13N	1B28		1A28	BIO05N
1C29	BIO14N	1B29		1A29	BIO06N
1C30	BIO15N	1B30		1A30	BIO07N
1C31		1B31		1A31	
1C32	+5VL	1B32		1A32	+5VL

* These signals are not connected on the back panel Bus. If coded interrupts are used (which use the signals on pins IC03 and 1A03), the signal IRON will not need to be wired.

Table 1.2 BUS SIGNALS (CONNECTOR J1)

J3 - CU to Peripheral Connector Pinning (F1MZ)

F1MZ		DRIVE			F1MZ		DRIVE		
PIN NUMBER	SIGNAL NAME	9404 SIGNAL	9406 SIGNAL	PIN	PIN NUMBER	SIGNAL NAME	9404 SIGNAL	9406 SIGNAL	PIN
3J01	GND	GND	GND	1	3J02	RDLN	RDL	RDL	2
3J03	GND	GND	GND	3	3J04	HLN	HLD	HDL	4
3J05	GND	GND	GND	5	3J06	TRON	TRO	TRO	6
3J07	GND	GND	GND	7	3J08	INDN	IND	IND	8
3J09	GND	GND	GND	9	3J10	LWCN	LWC	LWC	10
3J11	GND	GND	GND	11	3J12	STEPN	STEP	STEP	12
3J13	GND	GND	GND	13	3J14	DIRN	DIR	DIR	14
3J15	GND	GND	GND	15	3J16	WEN	WE	WE	16
3J17	GND	GND	GND	17	3J18	WDN	WD	WD	18
3J19	GND	GND	GND	19	3J20	SELON	SEL1	SEL1	20
3J21	GND	GND	GND	21	3J22	SEL1N	SEL2	SEL2	22
3J23	GND	GND	GND	23	3J24	SEL2N	SEL3	SEL3	24
3J25	GND	GND	GND	25	3J26	SEL3N	SEL4	SEL4	26
3J27	GND	GND	GND	27	3J28	RDYON	RDY1	RDY1	28
3J29	GND	GND	GND	29	3J30	RDY1N	RDY2	RDY2	30
3J31	GND	GND	GND	31	3J32	RDY2N	RDY3	RDY3	32
3J33	GND	GND	GND	33	3J34	RDY3N	RDY4	RDY4	34
3J35	GND	GND	GND	35	3J36	WRPN	WRP	WRP	36
3J37	GND	GND	GND	37	3J38				38
3J39	GND	GND	GND	39	3J40	DC40N	LOCK1	HSEL	40
3J41	GND	GND	GND	41	3J42	DC42N	LOCK2	LOCK1	42
3J43	GND	GND	GND	43	3J44				44
3J45	DC45N	GND	GND	45	3J46				46
3J47	DC47N	GND	GND	47	3J48	DC48N	LOCK3	LOCK2	48
3J49	GND	GND	GND	49	3J50	DC50N	LOCK4	DTYPE	50

Table 1.3 CONNECTIONS TO FLOPPY DISC DRIVES

Pinning of J5 Connector:

Pin Number	Signal Mnemonic	Signal Function
5J01,03	+5V	Power Supply
5J02-16 (even numbers)	IVB7N-ON	CU internal bus lines
5J25, 23, 5J05-21 (odd numbers)	RA02-12	PROM address lines
5J18	CX1 TEST	) Test input for
5J20	CX2 TEST	) microprocessor clock
5J22, 24	0V	Power supply

Table 1.4 TEST CONNECTOR SIGNALS

2 FUNCTIONAL DESCRIPTION

SECTION	2.1	DISC ORGANISATION	PAGE 2-3
	2.1.1	Tracks and Cylinders	2-3
	2.1.2	Sectors	2-3
	2.1.3	Data Organisation	2-3
	2.1.4	Data Recording Techniques	2-4
	2.1.5	Disc Formats	2-4
	2.1.6	Index Track	2-6
	2.1.7	Bad Track Handling	2-10
	2.1.8	Disc Formatting	2-11
	2.2	DISC OPERATION	2-11
	2.2.1	Track Zero Detection	2-11
	2.2.2	Index Pulse	2-11
	2.2.3	Head Control	2-12
	2.3	CONTROL UNIT STRUCTURE	2-12
	2.3.1	Data Transfer Circuits	2-12
	2.3.2	Bus Interface	2-15
	2.3.3	Disc Drive Interface	2-15
	2.3.4	Control	2-15
	2.4	CONTROL UNIT OPERATION	2-16
	2.4.1	CU Status States	2-16
	2.4.2	I/O Commands	2-16
	2.4.3	CPU Condition Register	2-17
	2.4.4	CU Status Word	2-17
	2.4.5	IOP Simulated Commands	2-17
	2.4.6	CU Input-Output Sequence	2-17
	2.4.7	Drive Ready/Not Ready	2-17
	2.4.8	Retry Procedure	2-18
	2.4.9	CRC Error Checking	2-20
	2.4.10	Multiple Sector Read and Write	2-20
	2.5	CU FUNCTIONS	2-21
	2.5.1	CIO Seek	2-21
	2.5.2	CIO Write	2-21
	2.5.3	CIO Write Deleted Data Address Mark	2-22
	2.5.4	CIO Verify	2-23
	2.5.5	CIO Read	2-24
	2.5.6	CIO Read, Skip Sectors with Deleted Data Address Marks	2-25
	2.5.7	CIO Door Lock	2-25
	2.5.8	CIO Door Unlock	2-25
	2.5.9	SST Command	2-25
	2.5.10	TST Command	2-26
	2.6	MICROPROGRAM	2-26

LIST OF ILLUSTRATIONS

FIGURE	2.1	DATA RECORDING TECHNIQUES	2-4
	2.2	DISCETTE DIMENSIONS (8 INCH)	2-5
	2.3(a)	FORMAT 0, SINGLE SIDED/SINGLE DENSITY	2-7
	2.3(b)	FORMAT 1, DOUBLE SIDED/DOUBLE DENSITY	2-8
	2.3(c)	FORMAT 2, DOUBLE SIDED/DOUBLE DENSITY	2-9

FIGURE	2.4	SELECTION OF FORMAT BY CU	PAGE 2-10
	2.5	BLOCK DIAGRAM OF F1MZ CONTROL UNIT	2-13
	2.6	COMMAND WORD FORMATS	2-14
	2.7	CU STATES	2-16
	2.8	IOP SIMULATED COMMANDS	2-18
	2.9	INPUT/OUTPUT TRANSFER SEQUENCE	2-19
	2.10	EXPLANATION OF STATUS WORD	2-27
	2.11(a)	GENERAL FLOWCHART FOR "READY AFTER NOT READY" INTERRUPT	2-28
	2.11(b)	GENERAL FLOWCHART FOR CIO LOCK OR UNLOCK COMMAND	2-28
	2.11(c)	GENERAL FLOWCHART FOR A CIO SEEK COMMAND	2-29
	2.11(d)	GENERAL FLOWCHART FOR A CIO READ, VERIFY OR READ SKIP SECTORS WITH DDAM COMMAND	2-30
	2.11(e)	GENERAL FLOWCHART FOR A CIO WRITE OR WRITE WITH DDAM COMMAND	2-31

LIST OF TABLES

TABLE	2.1	FORMATS AND DISCETTES	2-6

2.1 DISC ORGANISATION

2.1.1 TRACKS AND CYLINDERS

One or two surfaces of a single disc may be used to record data. Each surface is organised into 77 concentric tracks (tracks 00 - 76). Track 76 is nearest the centre of the disc. A track consists of a single channel on one surface of a disc for the length of one disc revolution. In the case of a double sided disc, a track position common to both sides of a disc is called a cylinder.
Tracks 1-73 are used for storing data while tracks 74 and 75 are used as replacements tracks in case of defects in any data track. In the case of double sided discs a complete cylinder is replaced if either of its tracks become defective. Track/cylinder 0 is used as an index track and track 76 is reserved for test purposes.
A 'read/write' head is provided for each disc surface of a two sided disc and the required track is obtained by addressing the cylinder and positioning the heads over that cylinder and then selecting the upper or lower head.

2.1.2 SECTORS

Tracks are divided into evenly spaced sectors (the number depending on the format used). Each sector contains an identification (ID) field and a data field. The data field is used to store a number of data words (depending on the format used) and a CRC word. The ID field contains complete information to identify the sector and a CRC word. The ID fields for the complete disc are pre-recorded onto the disc before use.

2.1.3 DATA ORGANISATION

Data is recorded bit-serially along a track, with bits grouped into 8 bit characters (bytes). Bits are grouped into 16 bit words (2 bytes) by the CU for transfer to memory. The most significant bit of each word is read or written first. Several sectors may be read or written with a single CIO command. The maximum transfer between the CU and memory is limited by IOP initialisation to 4096 words which is sufficient for a complete track (see table 2.1). The CU does not stop reading or writing at the end of a track but continues through to sector 0,1 etc, thus a complete track may be read or written with one CIO command. When all the sectors of a track have been read or written the CU automatically stops the exchange and informs the CPU. The fact that the CU continues to read or write through to the beginning of a track also permits the average data transfer rate to be increased by using a 'skew' factor to choose the first sector to be read or written on each successive track (this takes account of head seek and settling times).

2.1.4 DATA RECORDING TECHNIQUES

Information is stored on the disc in the form of flux changes on the magnetic surface. These flux changes are represented as pulses (one per flux change) at the interface between the CU and disc drive. One of two methods of encoding the data, before recording, is used.
These are shown in figure 2.1.

FREQUENCY MODULATION (FM)

A clock pulse is recorded at the start of each bit cell. For a 'one' bit, a data pulse is recorded in the middle of the bit cell. For a 'zero' bit no data pulse is used. Thus for a 'one' bit the frequency of pulses is doubled. This method is also called double frequency recording, and records data in single density.

MODIFIED FREQUENCY MODULATION (MFM)

For a 'one' bit a pulse is recorded at the centre of a bit cell. For a 'zero' bit a pulse is recorded at the start of a bit cell except when preceeded by a 'one' bit in which case no pulse is recorded. The frequency of pulses is the same as for FM recording but data is recorded at double the density.

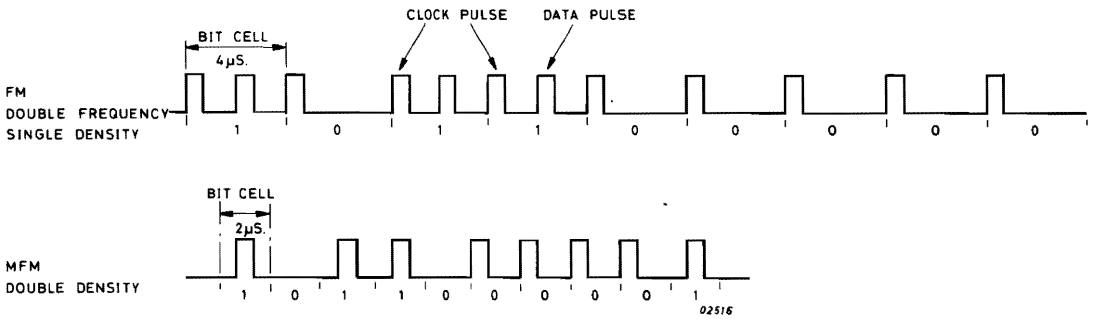

Figure 2.1 DATA RECORDING TECHNIQUES

2.1.5 DISC FORMATS

The two CDC drives are able to work with both single and double density but to respect IBM formats and to permit the use of preformatted discs, only the CDC 9406 is used with double density. (IBM uses double density only with two sided discs, and the CDC 9404 can only use one sided discs). Three IBM compatible formats can be used. These are shown in table 2.1. The layout of the tracks for the different formats is shown in figure 2.3. For dimensions, see figure 2.2.
The CU takes information from two different sources to choose the format used:
. positions of two U-links on the CU card, see figure 1.2.
. information given in the identifier field on the disc itself.
Figure 2.4 shows how the choice is made.

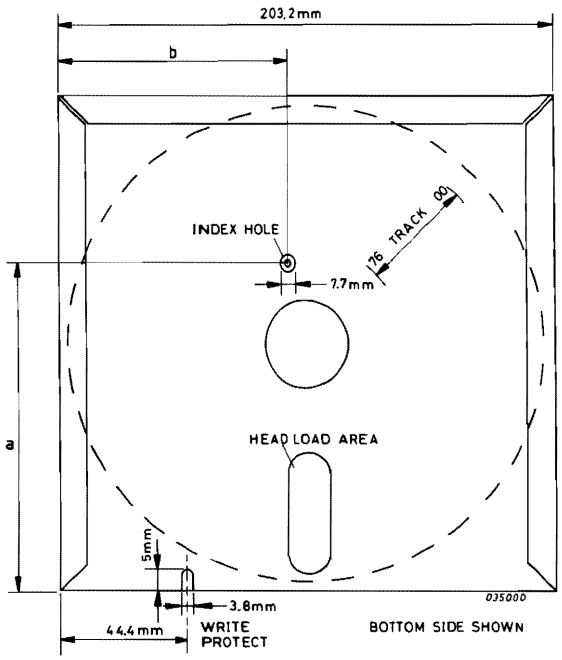

Figure 2.2 DISCETTE DIMENSIONS

2.1.6 INDEX TRACK

Cylinder 0, head 0 (on double sided discs) or track 0 (on single sided discs) is reserved as an index track. It is always formatted in single density with format 0, which allows the CU to read the track without knowing the type of disc. The CU always reads in format 0 if cylinder 0, head 0 (double sided discs) or track 0 (single sided discs) is specified in the command.
This feature is particularly useful for the software driver because the index track contains information on the format of the disc and may also be used to store the initial program loader.

Cylinder 0, head 1 (double sided discs only) is always preformatted with format 1 (see figure 2.3b). This track contains information (relevant to IBM formats only) on data coding
Cylinder 0, head 0 or 1 may be rewritten, although IBM compatibility may be lost.

Format 0	Format 1	Format 2
1 sided discette single density 1 head	2 sided discette double density 2 heads	2 sided discette double density 2 heads
77 tracks total (0 - 76) track 0 - Index 1 - 73 or 74 - Data tracks 75,76 - Spare	77 cylinders total (0 - 76) cylinder 0 - Index 1 - 74 - Data cyl 75,76 - Spare	77 cylinders total (0 - 76) cylinder 0 - Index 1 - 74 - Data cyl 75,76 - Spare
26 sectors/track 128 bytes/sector	26 sectors/track * 256 bytes/sector	8 sectors/track * 1024 bytes/sector
total 'data' capacity 246,272 bytes excl. spare and 00 (256.256 bytes incl.)	total 'data' capacity 985,088 bytes excl. spare and 00 (1,021,696 bytes incl.)	total 'data' capacity 1,212,416 bytes excl. spare and 00 (1,255,168 bytes incl.)
drive types CDC 9404 or CDC 9406	drive type CDC 9406	drive type CDC 9406
discette type 20 cm, IBM 1-sided, P/N 2305830 (or equiv.)	discette type 20 cm, IBM 2-sided, P/N 1766872 (or equiv.)	discette type 20 cm, IBM 2-sided, P/N 1669045 (or equiv.)
IBM systems using this format: IBM 3740, IBM 5320, IBM 1, all systems using IBM "Standard Data Interchange"	IBM systems using this format: IBM 34-2	IBM systems using this format: IBM 34-2

Table 2.1 FORMATS AND DISCETTES

* Note: Format 1 - Cyl. 0, head 0 is formatted as for format 0
(i.e. 26 sectors/track, 128 bytes/sector)
Format 2 - Cyl. 0, head 0 as for format 0
Cyl. 0, head 1 as for format 1

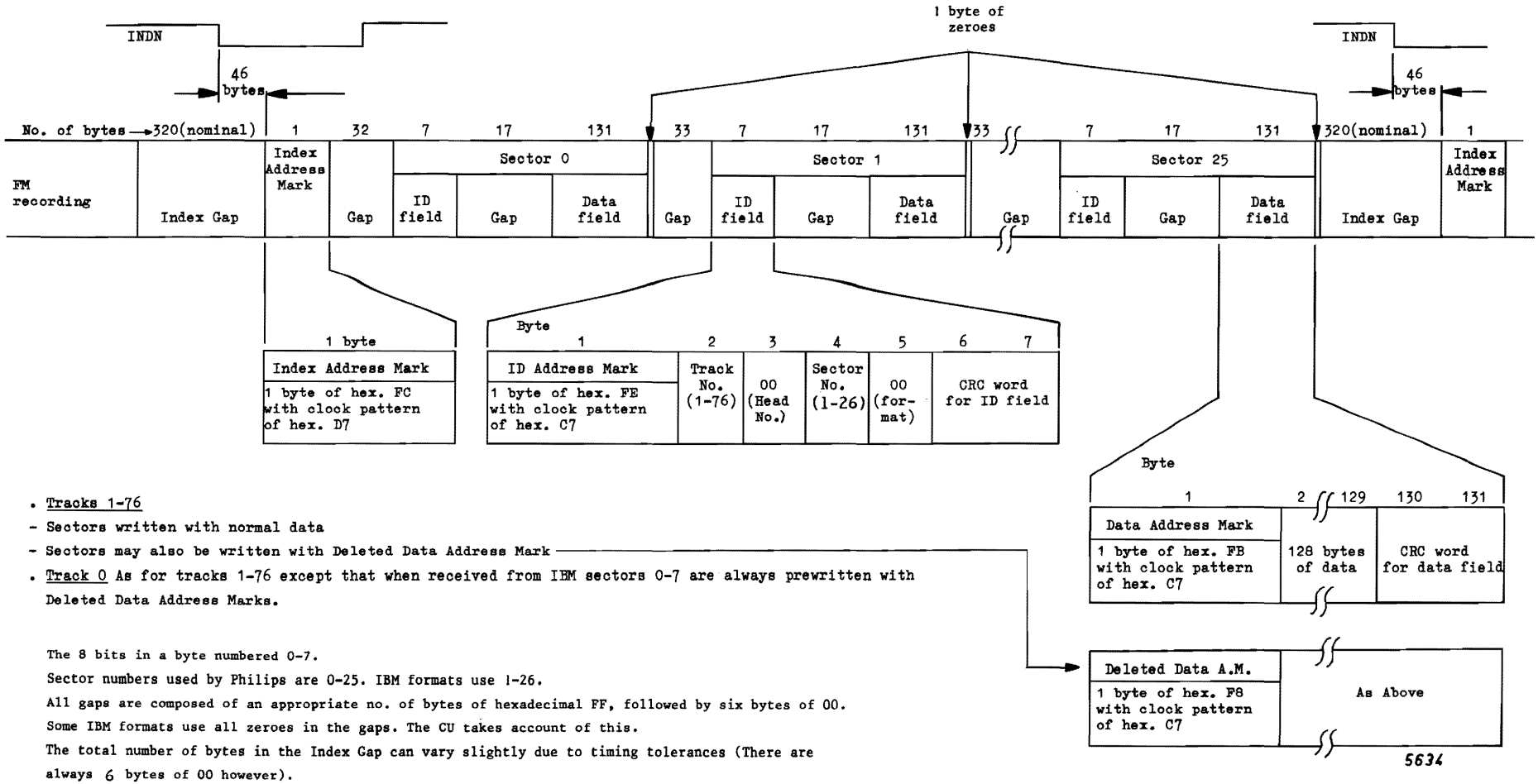

- Tracks 1-76
- Sectors written with normal data
- Sectors may also be written with Deleted Data Address Mark
- Track 0 As for tracks 1-76 except that when received from IBM sectors 0-7 are always prewritten with Deleted Data Address Marks.

The 8 bits in a byte numbered 0-7.
Sector numbers used by Philips are 0-25. IBM formats use 1-26.
All gaps are composed of an appropriate no. of bytes of hexadecimal FF, followed by six bytes of 00.
Some IBM formats use all zeroes in the gaps. The CU takes account of this.
The total number of bytes in the Index Gap can vary slightly due to timing tolerances (There are always 6 bytes of 00 however).

Foramt 0: 26 sectors x 64 words = 1664 words/track

Figure 2.3a FORMAT 0 SINGLE SIDED DISC, SINGLE DENSITY RECORDING (FM)

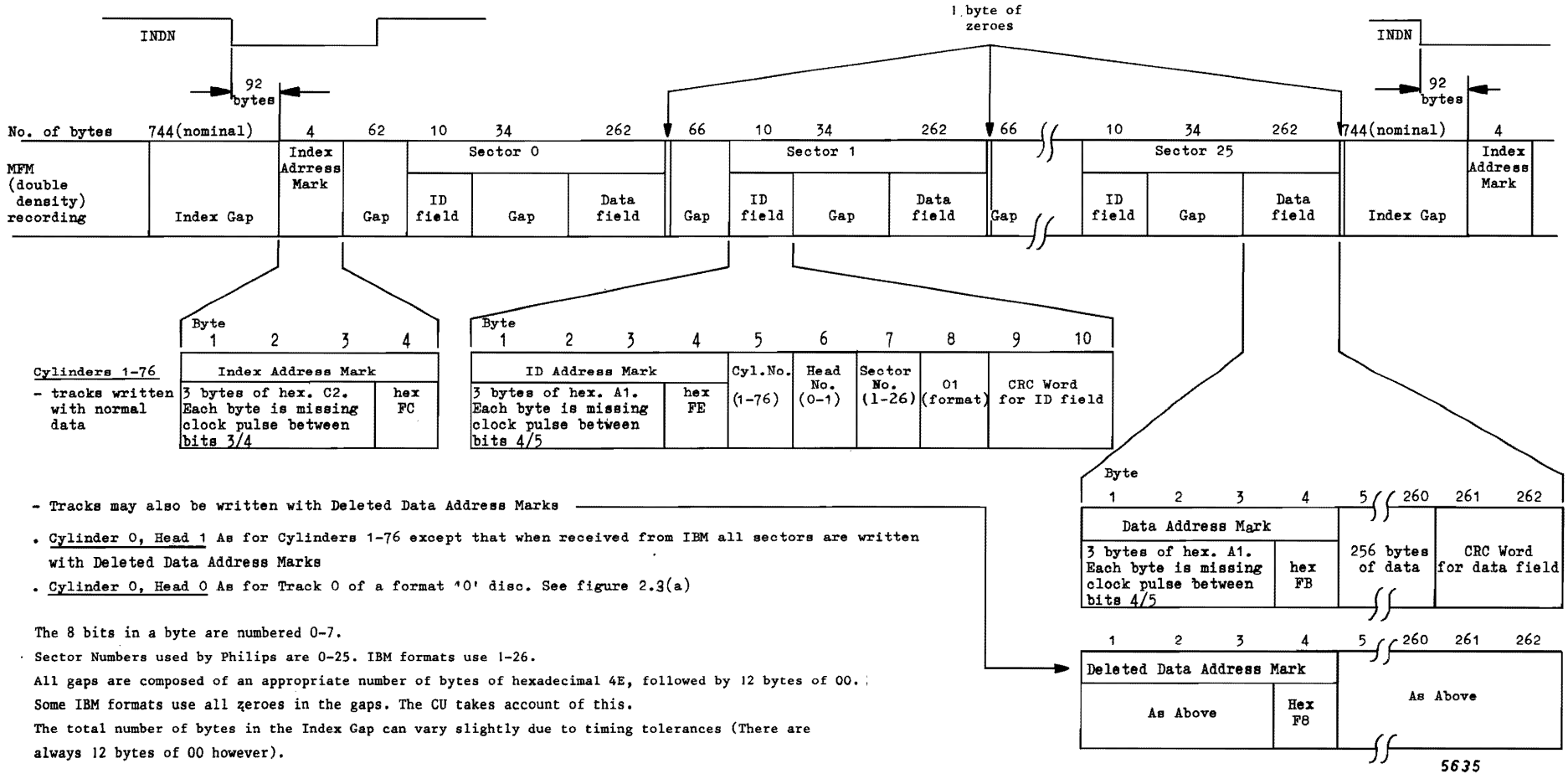

- Tracks may also be written with Deleted Data Address Marks

. Cylinder 0, Head 1 As for Cylinders 1-76 except that when received from IBM all sectors are written with Deleted Data Address Marks

. Cylinder 0, Head 0 As for Track 0 of a format '0' disc. See figure 2.3(a)

The 8 bits in a byte are numbered 0-7.

Sector Numbers used by Philips are 0-25. IBM formats use 1-26.

All gaps are composed of an appropriate number of bytes of hexadecimal 4E, followed by 12 bytes of 00.

Some IBM formats use all zeroes in the gaps. The CU takes account of this.

The total number of bytes in the Index Gap can vary slightly due to timing tolerances (There are always 12 bytes of 00 however).

Format 1: 26 sectors x 128 words = 3328 words/track.

Figure 2.3b FORMAT 1 DOUBLE SIDED DISC, DOUBLE DENSITY RECORDING (MFM)

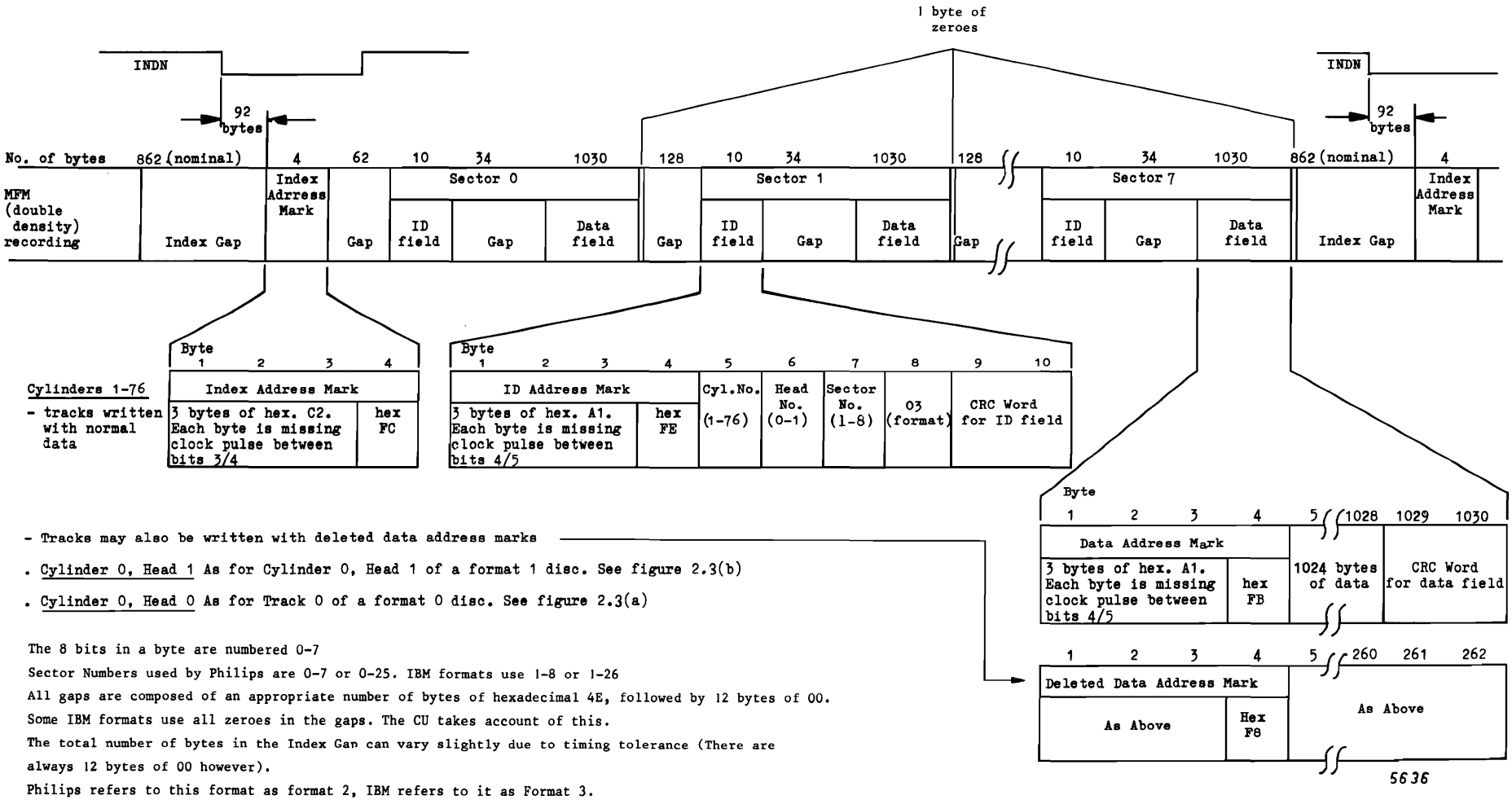

- Tracks may also be written with deleted data address marks

. Cylinder 0, Head 1 As for Cylinder 0, Head 1 of a format 1 disc. See figure 2.3(b)

. Cylinder 0, Head 0 As for Track 0 of a format 0 disc. See figure 2.3(a)

The 8 bits in a byte are numbered 0-7

Sector Numbers used by Philips are 0-7 or 0-25. IBM formats use 1-8 or 1-26

All gaps are composed of an appropriate number of bytes of hexadecimal 4E, followed by 12 bytes of 00.

Some IBM formats use all zeroes in the gaps. The CU takes account of this.

The total number of bytes in the Index Gap can vary slightly due to timing tolerance (There are always 12 bytes of 00 however).

Philips refers to this format as format 2, IBM refers to it as Format 3.

Format 2:8 sectors x 512 words = 4096 words/track

Figure 2.3c FORMAT 2 DOUBLE SIDED DISC, DOUBLE DENSITY RECORDING (MFM)

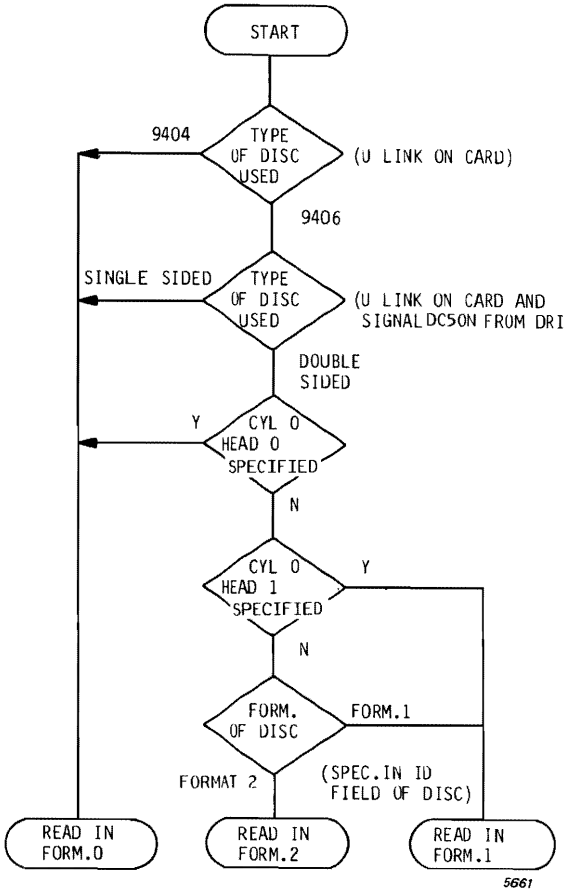

Figure 2.4 SELECTION OF FORMAT BY CU

2.1.7 BAD TRACK HANDLING

The concept of a bad track is replaced by the one of a bad cylinder with the two-sided discettes.

Preformatted discettes are initially delivered without a bad cylinder.

Due to the wear of the media, it can happen after a certain time that it is not possible to write and read correctly some tracks of the discette.
In this case it is recommended replacing the discette by a new one. But certain systems can reinitialize discettes with up to two bad cylinders and it is necessary to handle that possibility to have I.B.M. compatibility.

Cylinder numbering for discs with:

	. no bad cylinder	. one bad cylinder (No. 3)	. two bad cylinder (No. 3 and 6)
outer cylinder	0.....	0.....	0.....
	1.....	1.....	1.....
	2.....	2.....	2.....
	3.....	/FF.Bad.cylinder.	/FF.Bad.cylinder.
	4.....	3.....	3.....
	5.....	4.....	4.....
	6.....	5.....	/FF.Bad.cylinder.
	7.....	6.....	5.....
	8.....	7.....	6.....
	.....	.....	.....
	74.Spare cylinder	73.....	72.....
	75.Spare.cylinder	74.Spare cylinder	73.....
inner cylinder	76.Reserved.....	75.Reserved.....	74.Reserved.....

2.1.8 DISC FORMATTING

A brand new disc must be formatted before use. When a bad cylinder is discovered the disc must be reformatted (or those sectors must be skipped where the bad spots are situated). At the present moment the discs cannot be formatted using the control unit, so only preformatted discs can be used with the CU.

2.2 DISC OPERATION

2.2.1 TRACK ZERO DETECTION

The head(s) are mounted on an arm which moves across the disc to select the required track/cylinder. When the head is over track/cylinder zero a sensor is operated which generates signal TRON.

2.2.2 INDEX PULSE

One index pulse, INDN, per disc revolution, photo sensed by the drive unit from a hole in the disc, is used by the CU to recognise the start of each track. Signal INDN is electrically coincident with the Index Gap at the start of the track (see figure 2.3).

2.2.3 HEAD CONTROL

During 'seek' operations the head is positioned by a stepping motor which moves the head one track at a time in response to each pulse of signal STEPN in the direction specified by signal DIRN.
As the tracks get nearer the centre of the disc the bit density increases. To prevent overlapping of the bits a lower write current is selected with signal LWCN for tracks 43 - 76.
Before a read or write operation the head is loaded onto the disc with signal HLN. After a read/write has been completed the CU unloads the head after three turns of the disc if another command has not been received.
In the case of double sided discs signal DC40N is used to select the upper or lower head.
Signal WEN set enables the drive unit to write on the disc.
If a disc is not to be re-written a slot is cut in the jacket of the disc. This slot is photo-sensed in the drive unit which generates the Write Protect signal WRPN.

2.3 CONTROL UNIT STRUCTURE

The CU comprises four basic parts; Data transfer circuits, Interface with the system bus, Interface with the drives and Control. These basic parts are shown in figure 2.5.

2.3.1 DATA TRANSFER CIRCUITS

Data transfer is the main function of the CU. (In addition the CU performs other functions concerned with control of the disc drive, data verification and sector skipping).
The overall operation of a data transfer sequence from the system to disc drive is as follows, refer to figure 2.5.
Data is sent from the IOP one word at a time (16 bits) via the bi-directional data lines BIOOON-15N.
Each data word is entered into the bus transceivers.
8 bits at a time are loaded into the floppy disc controller via the CU internal bus lines IVBON-7N.
The floppy controller performs parallel to serial conversion on the data.
Serial data is gated out of the CU and written on the disc via data path WDN.

For a transfer sequence from disc to system the reverse process occurs but the serial data read from the disc is input to the CU via data path RDLN.

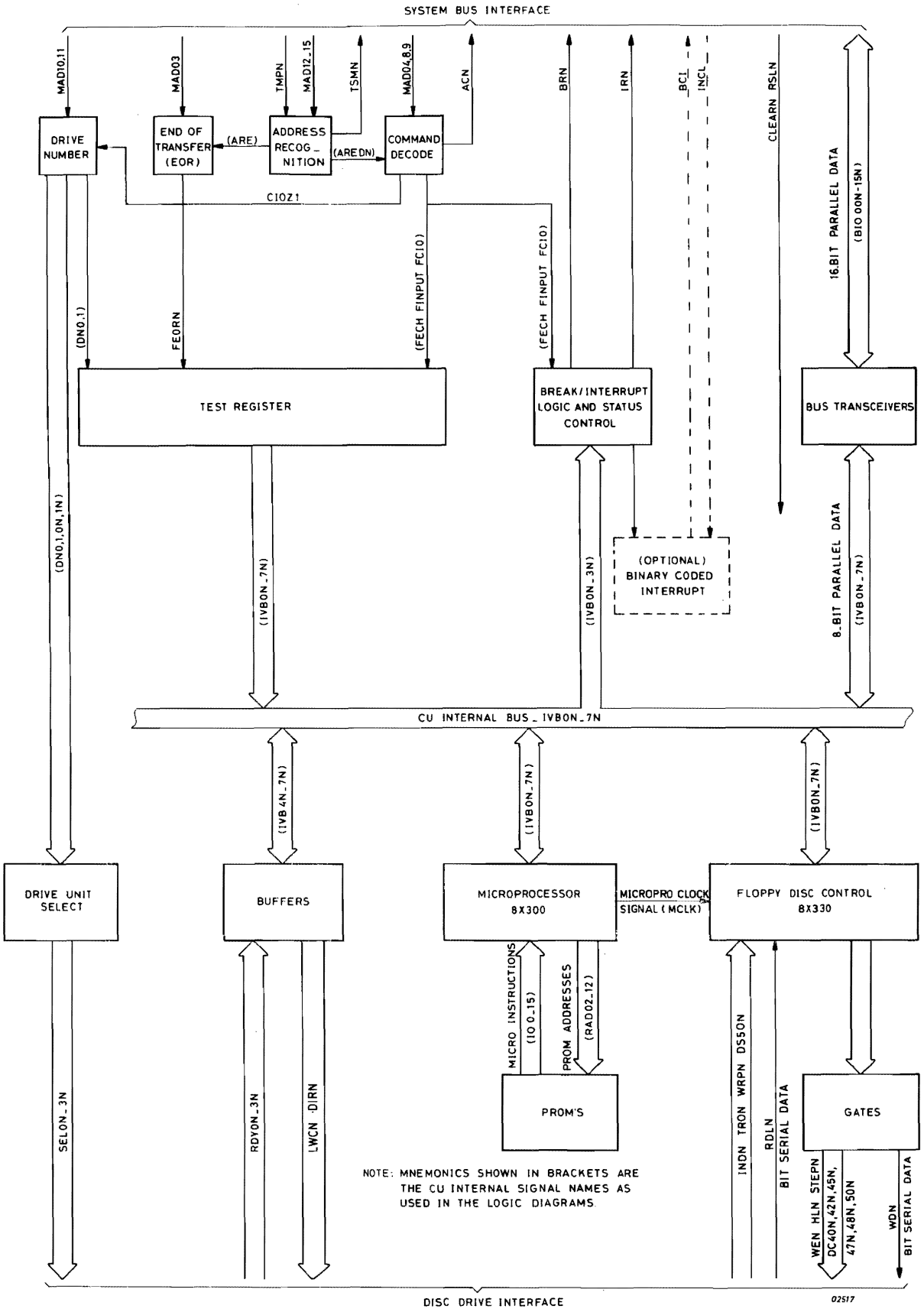

Figure 2.5 BLOCK DIAGRAM OF F1MZ CONTROL UNIT

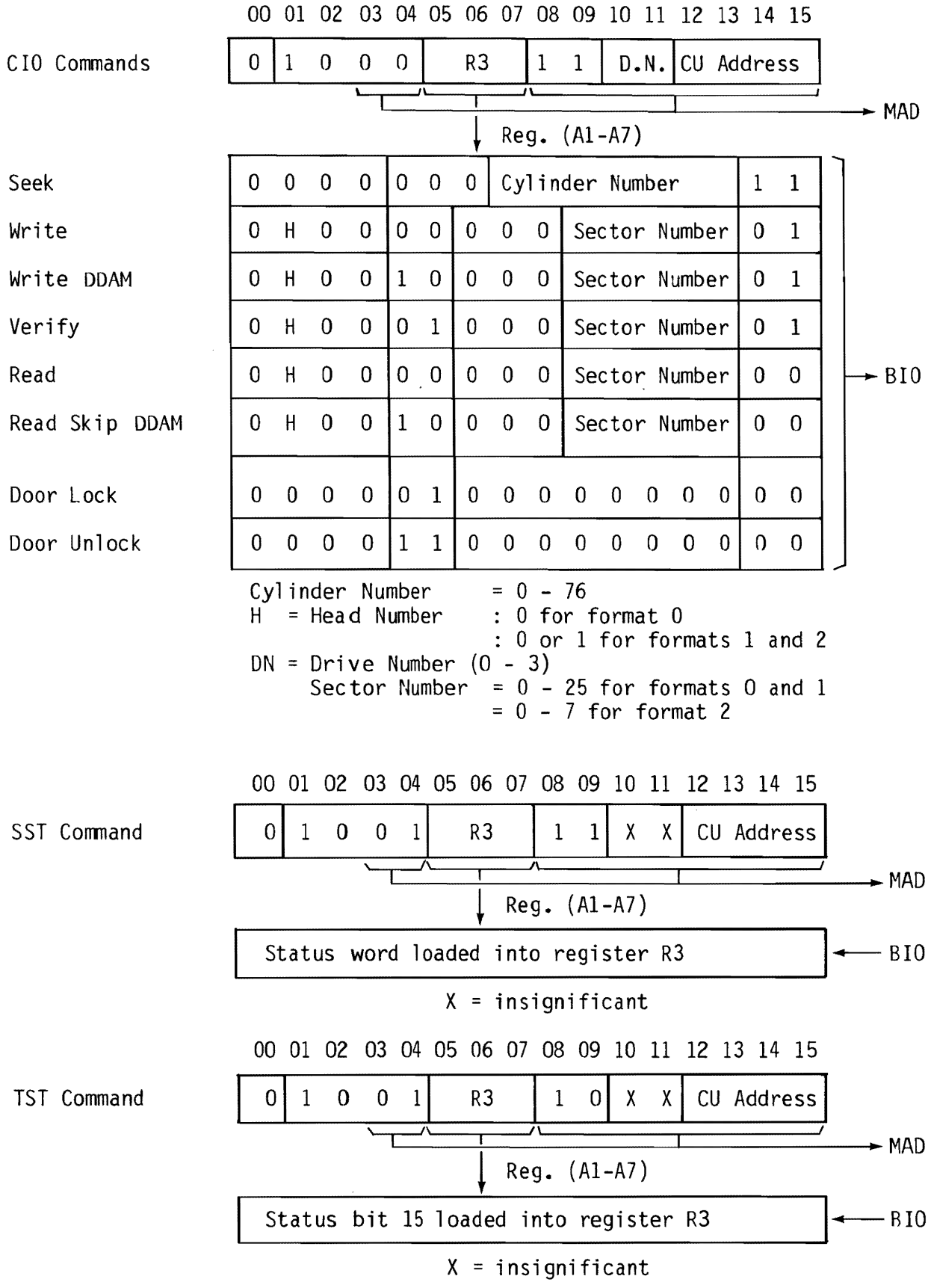

Figure 2.6 COMMAND WORD FORMATS

2.3.2 BUS INTERFACE

Parallel data is transferred to and read from the CU via BIOOON-15N. The CU address and commands are sent to the CU on the MAD lines and timing signal TMPN is set low to validate the command. When the CU recognises the address it sets TPMN low. When the command is from the CPU and the CU is in the correct status state to accept the command the CU replies with ACN. Commands accepted by the CU are shown in figure 2.6.
During a data transfer sequence a break request, BRN is sent to the IOP before each data word is transferred.
Break and Interrupt requests are controlled by the micro- processor and the CU Status states.

In future systems, based on the UPL bus a binary coded interrupt option may be used, BCI, instead of the discrete interrupt IRN. In this case the interrupt is sent to the CPU in the form of a serial code synchronised with an incoming clock signal INCL.

Signal CLEARN is the master reset signal from the CPU which clears the main registers of the CU and resets the microprocessor back to the first instruction (instruction /00).

2.3.3 DISC DRIVE INTERFACE

Serial 'read' data is input to the CU at RDLN and serial 'write' data is output at WDN. Drive ready is indicated by the drive with one of signals RDYON-3N and selection of one of the four drives is made with signals SELON-3N. Signals DC40N, 42, 45, 47, 48, 50N are used according to the type of drive unit. See table 1.3 for a brief explanation. The other signals of the disc drive interface are described in paragraph 2.2.

2.3.4 CONTROL

Overall control of the CU is provided by the 8-bit microprocessor type 8X300. Two PROM's addressed by the microprocessor contain the microprogram. Communication between the microprocessor and the rest of the CU is via the CU internal bus IVBON-7N. The main control functions for the drives and data processing, are performed by the Floppy Disc Controller chip type 8X330. This chip is compatible with the 8X330 and is synchronised with its clock pulse MCLK.

2.4 CONTROL UNIT OPERATION

2.4.1 CU STATUS STATES

Four operating states of the CU are defined by flag signals F0 and F1. These signals control the sending of break and interrupt request and command acceptance. (See figure 2.7)

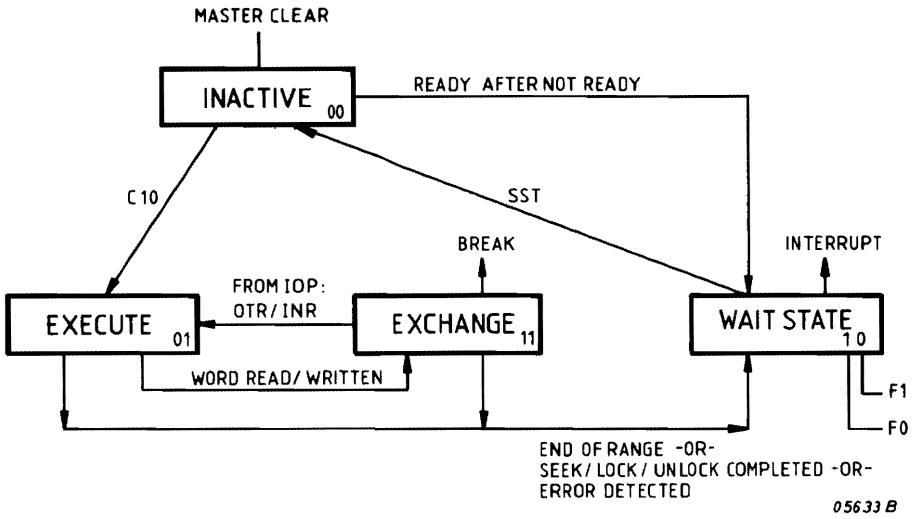

Figure 2.7 CU STATES

2.4.2 I/O COMMANDS

The commands used by the software are shown in figure 2.6. MAD bits 03, 04 and 08-15 are sent directly to the CU and are decoded. MAD bit 03 is used as the end of transfer bit at the end of an IOP data exchange (EOR).
For a CIO Start command the R3 field of the instruction word (bits 5-7) indicates the CPU register from which the specific command code is sent to the CU via the BIO lines.
For a SST or TST command the R3 field indicates the CPU register where the status word (or bit) is sent.
There is no Seek to Zero command, this function is performed automatically by the CU during a Seek command when necessary.
When power has been switched on to a drive it runs continuously so there are no stop/start commands.
Note: Disc drives controlled from a single CU cannot be operated simultaneously. Thus a command for one drive must be finished before a new command is accepted by the CU.

2.4.3 CPU CONDITION REGISTER

During the execution of any I/O command the CPU condition register is set according to the response of the CPU.

- The CR is set to 3 (CR=11) if the address code on MAD 12-15 is not recognised.
- The CR is set to 1 (CR=01) if the address is recognised but the command is not accepted by the CU. Nothing is altered in the CU.
- The CR is set to 0 (CR=00) if the command is accepted.

2.4.4 CU STATUS WORD

If during the execution of a CIO start command an error is detected by the CU, the CU goes immediately to the Wait state, sets the appropriate error status bit and sends an interrupt request to the CPU. The CPU responds by sending a SST command which requests the transfer of the CU status word (see figure 2.10). When the status word has been transferred, the CU goes to the Inactive state ready for the next CIO command.
When a command has been successfully executed the CU goes to the Wait state and sends an interrupt to the CPU. In this case the status word is sent with all of the error status bits reset (STATUS OK).

2.4.5 IOP SIMULATED COMMANDS

During data transfers each word is transferred to memory via the IOP by an INR command and each word is transferred to the drive by an OTR command. These commands are generated by the IOP and are shown in figure 2.8.
Note: These commands do not contain the drive number of the disc unit used. This was already specified in the CIO command which originally started off the transfer.
Data transfer between this CU and the system are made in word mode, with each word containing two characters. If an odd number of characters is to be transferred a final character of all zeroes must be sent in the last word of the transfer.

2.4.6 CU INPUT - OUTPUT SEQUENCE

Data is transferred on IOP channel only.
The general sequence of the transfer is shown in figure 2.9. Once the CIO Start command has been accepted by the CU the IOP handles the complete exchange and the CPU program is free. The IOP indicates to the CU that the exchange is finished by setting the end of transfer bit (EOR). The last data word is then transferred and after receiving an interrupt request from the CU the CPU takes control again to transfer the CU status word.

2.4.7 DRIVE READY/NOT READY

If the CU receives a command for a drive which is not ready or if the selected drive becomes not ready during the execution of a command the CU goes immediatly to the Wait state, sets the Not Operable status bit (see figure 2.10) and sends an interrupt request to the CPU. If a drive becomes ready while the CU is not busy, the CU again goes to Wait state and sets the Drive Ready After Not Ready status bit in the status word.

2.4.8 RETRY PROCEDURE

The retry procedure is performed if;1) none of the ID fields of a track can be read during verification during Seek command, 2) The ID field of one of the sectors to be read or written during a Read or Write or Verify command cannot be read, 3) the data address mark of one of the sectors to be read with a Read or Verify command cannot be read. No retry is performed in the case of a data fault after a Read or Verify command, this must be generated by the software. The procedure is performed until the error is recovered or until the procedure is completed. If the retry procedure is started the Retry Status bit (see figure 2.10) is always set in the status word after the command, even if the command was eventually successfully completed.

OTR Command

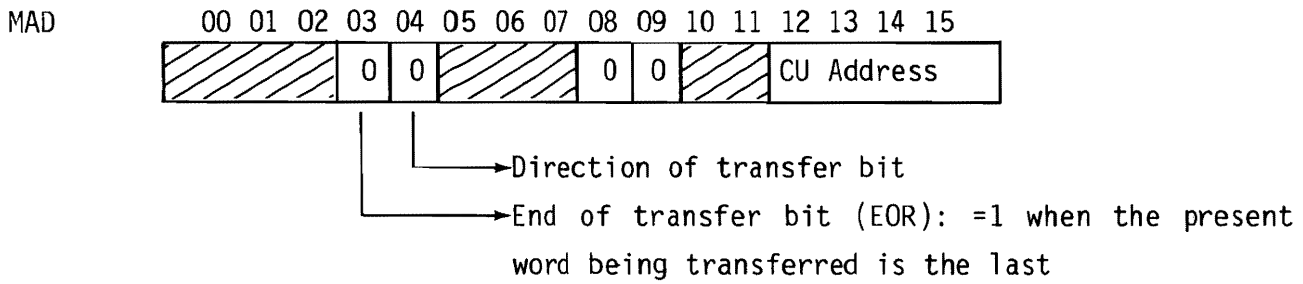

INR Command

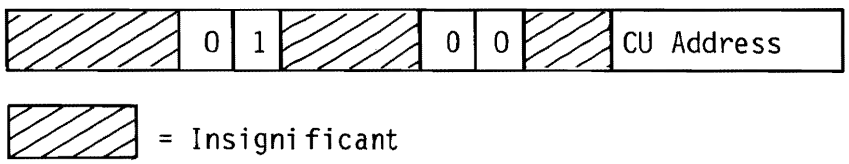

These commands are simulated in the sense that they are not generated by the software.

Figure 2.8 IOP SIMULATED COMMANDS

Note: No retry procedure is used for data errors.

The retry procedure consists of:

- Re-read the track four times
- Seek to track zero (counting the number of tracks)
- Re-seek to original track (recounting the tracks)
- Re-read the track four times
- Seek to track 74
- Re-seek to original track
- Re-read track four times

} Perform this part of the sequence twice.

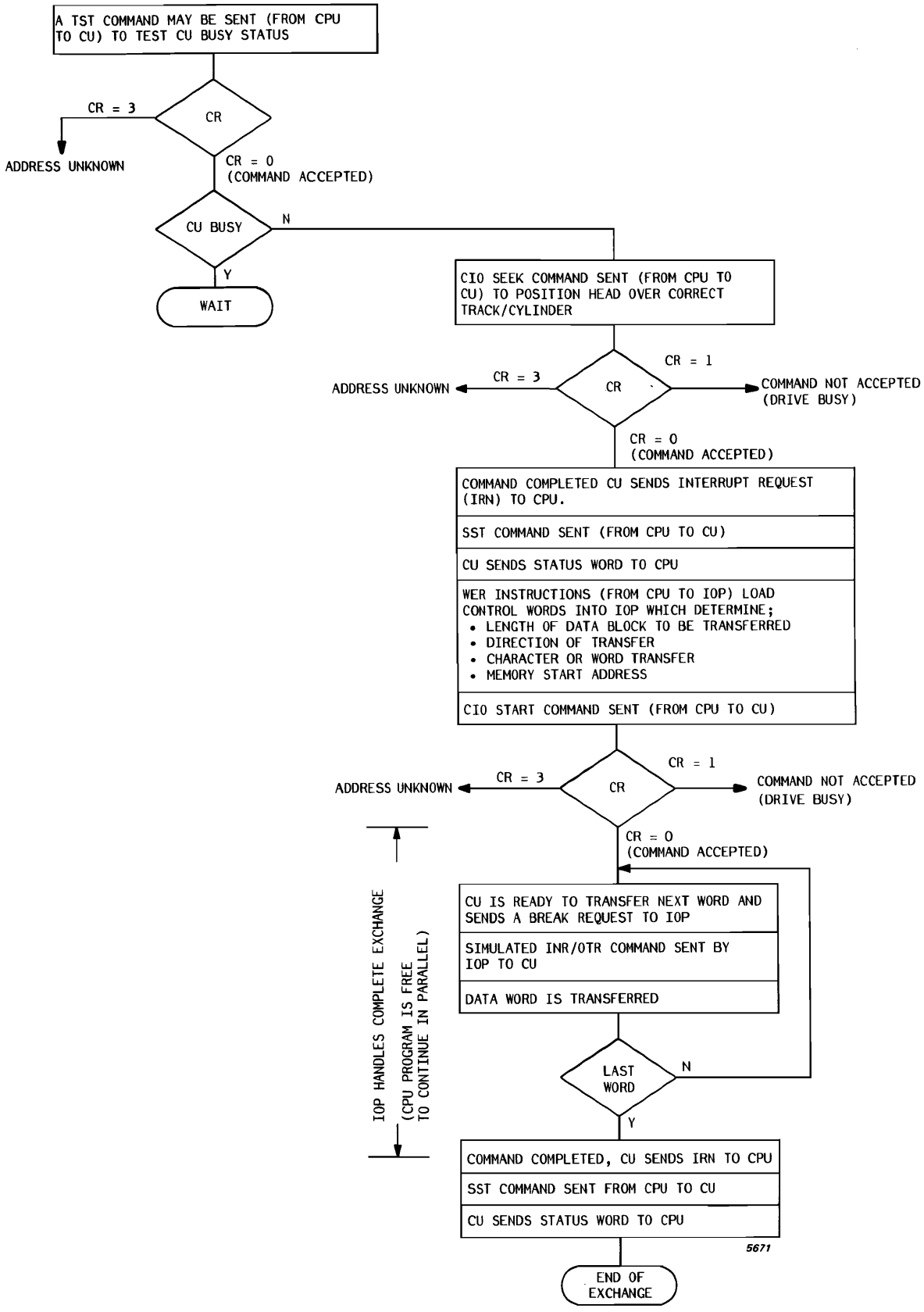

Figure 2.9 INPUT/OUTPUT TRANSFER SEQUENCE

2.4.9 CRC ERROR CHECKING

During disc write operations the 8X330 chip generates a Cyclic Redundancy Check (CRC) word for each data field written. This word is the remainder from the division of all the bits in the data field (represented as an algebraic polynominal) by the polynominal $X^{16} + X^{12} + X^5 + 1$. The CRC word is generated while the data is being written on the disc and after the complete data field has been written the CRC word is sent to the disc drive and is written at the end of the data field.
The CRC word at the end of each ID field is written in the same way when a disc is formatted. During disc read operation the 8X330 performs a CRC error check. All the bits in the data field (including the bits of the CRC word) are divided by the same polynominal used for CRC word generation. At the end of the data field, if no detectable error has occurred, the remainder of the division is zero. If the remainder is not zero, the Data Fault status bit (see figure 2.10) is set in the status word.
Identifier Field information is checked in the same way while the ID Field of each sector is being read.

2.4.10 MULTIPLE SECTOR READ AND WRITE

The CU can read or write several sectors with one command. The first sector to be read or written is given in the command. The CU begins to read or write on this sector and then continues with the following sector until all the words for which the IOP was initialised have been transferred. When the CU has read or written the last physical sector of a track (sector 7 or 25 according to the format), it then continues to read or write sectors 0,1, etc.
The maximum block length that can be transferred is 4K words (fixed by the IOP initialization) which is sufficient to read or write a full track, in any of the three formats, with one CIO command.

	Format 0	Format 1	Format 2
Maximum number of words transmitted with one command	1,664	3,328	4,096

If the CU reads or writes a full track (ie. the sector number given in the command is reached again after one revolution of the disc) and if the IOP doesn't stop the exchange, the CU automatically stops the exchange to prevent overlapping of the transfers. In this case the Full Track Processed status bit is set (see figure 2.10) in the status word.

During a read command, if the IOP stops the exchange before the end of a sector, the CU continues reading till the end of the sector without transferring data to check the CRC error. During a write command, if the IOP stops the exchange before the end of a sector the CU writes all zeroes until the end of the sector and generates the CRC word which is written at the end of the data field.

2.5 CU FUNCTIONS

2.5.1 CIO SEEK

This command is used to position the head(s) over a specified cylinder or track prior to a CIO Write, Read or similar command. The command accepted only if the CU is in the inactive state. If the command accepted:

1) The CU checks if the specified drive is operable
2) The CU checks if the specified cylinder number is 76 or less.
3) If the Seek command comes after the status "Drive Ready After Not Ready" or immediately after Master Clear of the system the CU automatically performs a seek to zero function.
4) The CU calculates the displacement to the required cylinder and executes a seek.
5) The CU reads the next identifier of the new track to verify the position of the head. If the identifier cannot be read or is read with a CRC error the CU reads the next identifier. If none of the identifiers can be read the CU performs a retry procedure.
   If the new track is not the correct track or is a bad track, the CU displaces the head one more track towards the centre of the disc and verifies the position of the head. Again if the head is not correctly positioned the CU displaces the head one more track towards the centre of the disc and verifies the position of the head. If the head is not correctly positioned at the end of this procedure the CU sets the Seek Error status bit.
6) At the end of the command the CU goes to the Wait State and sends an interrupt request to the CPU.

Note: After Power On or Drive Ready After Not Ready, a seek must be sent before any read on write command.

The following error status bits may be set at the end of a Seek command:

Bit 15 - Not Operable: Set if the addressed drive is not operable.
Bit 11 - Program Error: Set if the cylinder number specified in the command is 76 or less.
Bit 10 - Retry: Set if the retry procedure was necessary to read the identifiers in any of the cylinder verifications.
Bit 6 - Seek Error: Set if the head is not correctly positioned at the end of the command.
Bit 5 - Sector Not Found: Set if none of the identifiers of a track was correctly read during a cylinder verfication, even after a retry procedure, in this case bit 6 is also set.

2.5.2 CIO WRITE

This command is used to write data (with normal data address marks) onto successive sectors of the track selected with the previous CIO Seek command (with the limit of a full track capacity). The first sector to be written is specified in the command. The command is accepted only if the CU is in the signal inactive state. If the command is accepted:

1) The CU checks if the drive is ready and checks if the Write Protect signal from the drive is active.
2) The CU checks if the drive head position is known and checks the format of the disc, see figure 2.4.
3) The CU checks if the head number and sector number specified in the commandare too large for the format, see figure 2.6.

4) The CU reads identifiers of sector after sector until it finds the addressed sector. If the CU cannot find the addressed sector or if the identifier is read with a CRC error, it performs the retry procedure.
5) The CU writes data on the specified sector with a normal data address mark. Data is transferred word by word to the CU via the BIO lines of the bus. For this purpose it sends a break request before each word and the IOP must reply with an OTR command within 30uS (for double density records) or 60uS (for single density records).
6) If at the end of a sector there are still more words to be transferred the CU searches the identifier of the next sector and continues writing on this new sector. The transfer is completed when the IOP stops the exchange or if the sector specified in the command is reached again after one revolution of the disc.
7) During the writing of a sector the CRC error character is generated and is written at the end of the data field. If the IOP stops the exchange before the end of a sector the CU continues to write all zeroes until the end of the sector so that the CRC character can still be generated.
8) At the end of the Write command the CU goes to the Wait state and sends an interrupt to the CPU.

The following error status bits may be set at the end of a Write command:

Bit 15 - Not Operable: Set if the addressed drive is not operable
Bit 14 - Throughput Error: Set if the IOP doesn't reply to a break request within the specified time. In this case the rest of the sector is written with zeroes
Bit 12 - Full Track Processed: Set if the sector number specified in the command is reached again after one revolution, and if the IOP hasn't stopped the exchange.
Bit 11 - Program Error: Set if;
. head number is too high greater than 0 for 9404 drive
. sector number too high for the format
greater than 25 for formats 0,1
greater than 7 for format 2
. a Seek command wasn't sent before the Write command in the following cases;
: after a Master Clear of the system (ie. power on, automatic restart after power failure)
: after a status 'Drive Ready after Not Ready' ie. exchange of discette.
In these three cases the command is not executed.

. IOP sends an INR command in reply to the break.
In this case the first sector only is written with all zeroes.

Bit 10 - Retry: Set if the retry procedure was necessary to read the identifier in any of the sectors to be written.
Bit 7 - Write Protect: Set if the addressed drive contains a write protected discette - in this case the command is not executed
Bit 5 - Sector Not Found: Set if the identifier of one of the sectors to be written could not be found or was read with a CRC error (even after a retry procedure).

2.5.3 CIO WRITE DELETED DATA ADDRESS MARK

This command is identical to the CIO Write command except that the data is written with deleted data address marks at the beginning of each data field.

2.5.4 CIO VERIFY

This command may be used after a Write (or Write Deleted Data) command to read back and check bit by bit the written data. For this purpose the I/O buffer in main memory must remain unchanged between the Write and consecutive Verify command. Before executing a Verify command the IOP must be initialised again with the same values as for the preceding Write command. The first sector to be verified is specified in the command. The CU then verifies sector after sector until the IOP stops the exchange or until a full track has been processed.
Sectors with both normal and deleted data address marks are verified.
The command is accepted only if the CU is in the inactive state. If the command is accepted:

1) The CU checks the format of the disc, see figure 2.4.
2) The CU checks if the head number and sector number specified in the command are too large for the format, see figure 2.6.
3) The CU reads the identifiers of sector after sector until it finds the addressed sector. If the sector cannot be found or if the identifier is read with a CRC error, a retry procedure is performed.
4) The CU reads the data of the addressed sector and compares each word with the corresponding word read from main memory. For each word transferred from memory the CU sends a break request and the IOP must reply with an OTR command within 30uS (for double density records) or 60uS (for single density records).
5) If at the end of the sector there are still more words to be verified the CU searches the identifier of the next sector and continues the verification on this new sector. The process is completed when the IOP stops the exchange or if the sector specified in the command is reached again after one revolution of the disc, or if an error is detected during data comparison.
6) At the end of the command the CU goes to the Wait state and sends an interrupt to the CPU.

The following error status bits may be set at the end of a Verify command:

Bit 15 - Not Operable: Set if the addressed drive is not operable.
Bit 14 - Throughput Error: Set if the IOP doesn't reply to a break request within the specified time.
Bit 13 - Data Fault: Set with bit 10 = 0 if a comparision error is found during the command
: Set with bit 10 = 1 if the data address mark of one of the sectors could not be found, even after a retry procedure
Bit 12 - Full Track Processed: Set if the sector number specified in the command is reached again after one revolution of the disc, and if the IOP hasn't stopped the exchange.
Bit 11 - Program Error: Set if;
. head number is too high — greater than 0 for 9404 drive
. sector number too high — greater than 25 for formats 0,1
greater than 7 for format 2
. A Seek command wasn't sent before the Verify command in the following cases;
: after a Master Clear of the system (ie. power on, automatic restart after power failure)
: after a status 'Drive Ready after Not Ready' ie. exchange of discette.
. IOP sent an INR command in reply to break request.
Bit 10 - Retry: Set if the retry procedure was necessary to read the identifier in any of the sectors to be verified.
Bit 5 - Sector Not Found: Set if the identifier of one of the sectors to be verified could not be found or was read with a CRC error (even after a retry procedure).
Bit 4 - DDAM: Set if one of the sectors has been read with a DDAM.

2.5.5 CIO READ

This command is used to read data (with either normal or deleted data address marks) from successive sectors of a track (with the limit of a full track capacity). The first sector to be read is specified in the command. The CU then reads sector after sector until the IOP stops the exchange or until a full track has been processed. The command is only accepted if the CU is in the inactive state. If the command is accepted :

1) The CU checks the format of the disc, see figure 2.4.
2) The CU checks if the head number and sector number specified in the command are too large for the format, see figure 2.6.
3) The CU reads the identifiers of sector after sector until it find the addressed sector. If the sector cannot be found or if the identifier is read with a CRC error, a retry procedure is performed.
4) The CU reads the data from the specified sector and transfers it word by word to the IOP via the BIO lines of the bus. For each word transferred the CU sends a break request and the IOP must reply within 30uS (for double density records) or 60uS (for single density records) with an INR command.
5) If at the end of a sector there are still more words to be transferred the CU searches the identifier of the next sector and continues reading on this new sector. The transfer is completed when the IOP stops the exchange or if the sector specified in the commands is reached again after one revolution of the disc.
6) While reading each sector the CRC error is calculated. At the end of the sector this sector should be zero, in which case the CU continues to read the next sector. If the CRC error is not zero the CU goes immediately to the Wait status without reading the following sectors. The status word which is transferred after a CRC error does not give the number of the sector read with an error. Also no retry procedure is performed for a data error. Thus for error recovery the complete CIO Read command must be repeated.
7) If the IOP stops the exchange before the end of a sector the CU continues to read till the end of the sector (without data transfer) in order to check the CRC error.
8) At the end of the command the CU goes to the Wait status and sends an interrupt request to the CPU.

The following error status bit can be set at the end of the command:
Bit 15 - Not Operable: Set if the specified drive is not operable. The
Bit 14 - Throughput Error: Set if the IOP doesn't reply to a break request within the specified time.
Bit 13 - Data Fault: Set with bit 10 = 0 if one of the sectors is read with CRC error.
: Set with bit 10 = 1 if the DDAM of one sector could not be found even after a Retry procedure.
Bit 12 - Full Track Processed: Set if the sector number specified in the command is reached again after one revolution of the disc, and if the IOP hasn't stopped the exchange.
Bit 11 - Program Error: Set if:
. head number is too high, greater than 0 for 9404 drive
. sector number too high greater than 25 for formats 0,1
greater than 7 for format 2
. a Seek command wasn't sent before the Read command in the following cases;
: after a Master Clear of the system (ie. power on, automatic restart after power failure)
: after a status 'Drive Ready after Not Ready' ie. exchange of discette.
. IOP sends an OTR command in reply to the break request.

Bit 10 - Retry: Set if the retry procedure was necessary to read the identifier or the data address mark of one of the sectors to be read.
Bit 5 - Sector Not Found: Set if the identifier of one of the sectors to be read could not be found (or was read with a CRC error) even after a retry procedure.
Bit 4 - Deleted Data: Set if one of the sectors to be read has a deleted data address mark. (These sectors are read normally).

2.5.6 CIO READ, SKIP SECTORS WITH DELETED DATA ADDRESS MARKS

This command is identical to the CIO Read command except that the sectors with deleted data (ie. sectors whose data field starts with a deleted data address mark) are skipped. The CU continues reading the next sector with normal data address mark.
Status bit 4 (Deleted Data) is set if one or more sectors with deleted data have been skipped.

2.5.7 CIO DOOR LOCK

This command is used to lock the door of the addressed floppy disc drive. The command is effective only if the addressed drive has a door lock option. If not, the command is executed normally by the CU but has no effect on the drive. The command is accepted only if the CU is in the inactive state. If the command is accepted:

1) The CU checks if the specified drive is operable.
2) The CU sends the door lock signal to the specified drive.
3) At the end of the command the CU goes to the Wait state and sends an interrupt request to the CPU.

The following error status bit can be set at the end of the command:
Bit 15 - Not Operable: Set if the specified drive is not operable. The command is not executed in this case.

2.5.8 CIO DOOR UNLOCK

This command is identical to the CIO Door Lock command except that the CU sends a door unlock command to the specified drive when it receives the command.
Note: The drives are always set to the 'Unlock' state after a system Master Clear.

2.5.9 SST COMMAND - (SEND STATUS)

This command is used to send the CU status word to the CPU, after an interrupt. The command is accepted only if the CU is in the Wait state. If the command is accepted:
1) The status word is loaded onto the BIO lines of the bus. (See figure 2.10 for an explanation of the status word).
2) The CU goes to the inactive state.
3) The status word is reset in the CU.

2.5.10 TST COMMAND (TEST STATUS)

This command may be used before IOP initialisation to check if the CU is busy. The command is always accepted. When the command is received the CU sets BIO line 15 of the bus low (active) if the CU is busy or does nothing if it is not busy.

2.6 MICROPROGRAM

Figure 2.11 shows the general flow of the complete microprogram. The figure numbers in circles refer to the detailed flow charts figures 3.6(a) to 3.6(o) given in chapter 3.

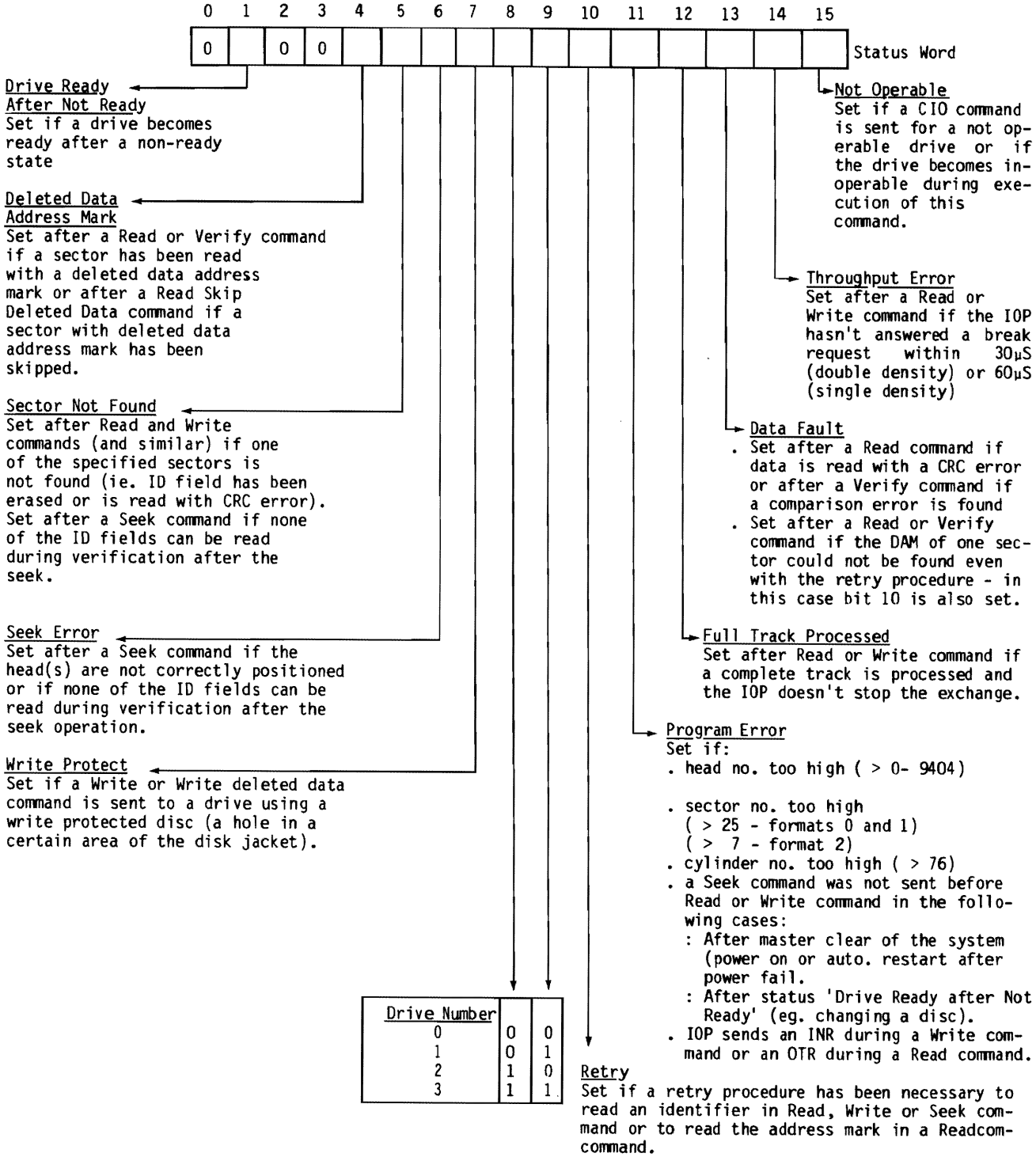

Figure 2.10 EXPLANATION OF STATUS WORD

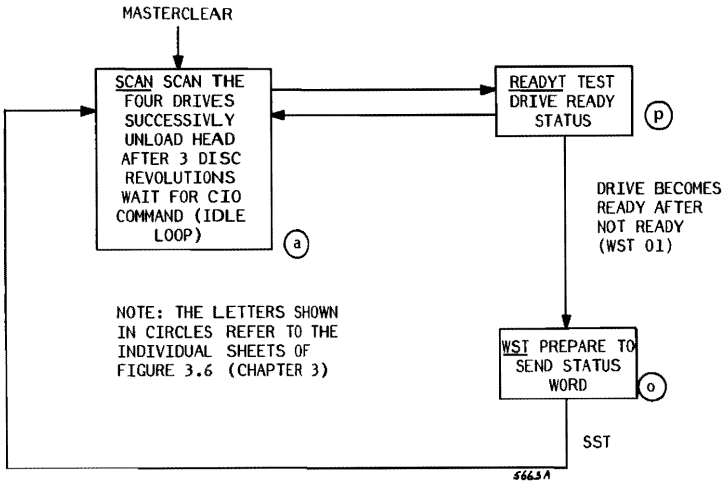

Figure 2.11a GENERAL FLOWCHART FOR "READY AFTER NOT READY" INTERRUPT

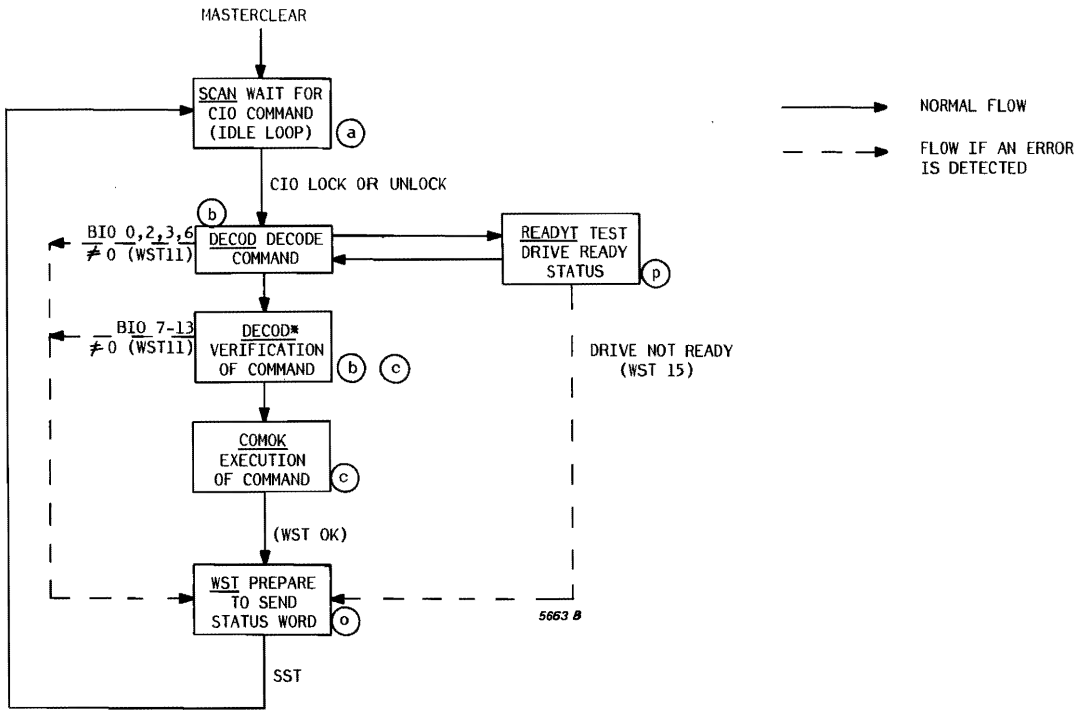

Figure 2.11b GENERAL FLOWCHART FOR CIO LOCK OR UNLOCK COMMANDS

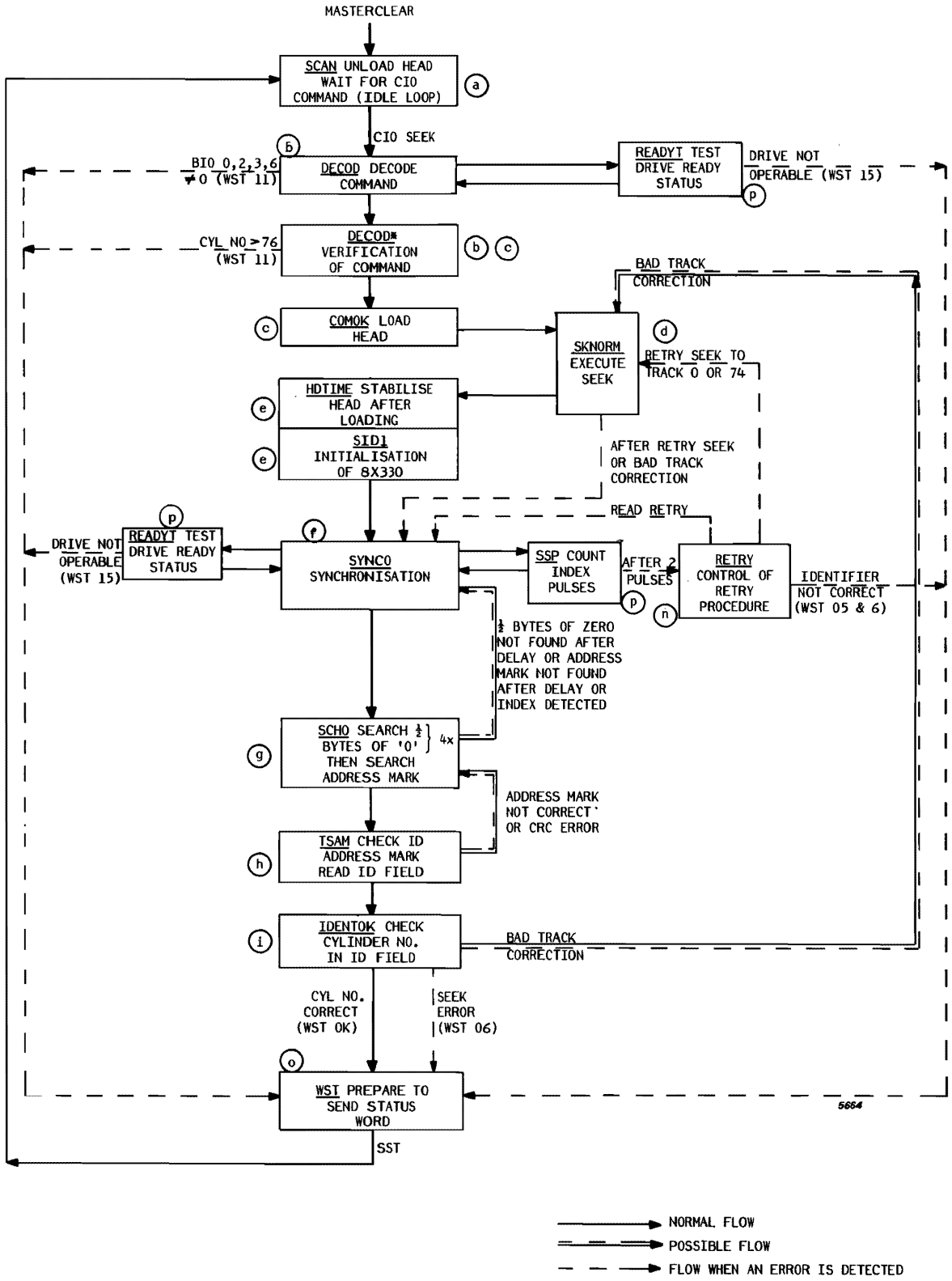

Figure 2.11c GENERAL FLOWCHART FOR CIO SEEK COMMAND

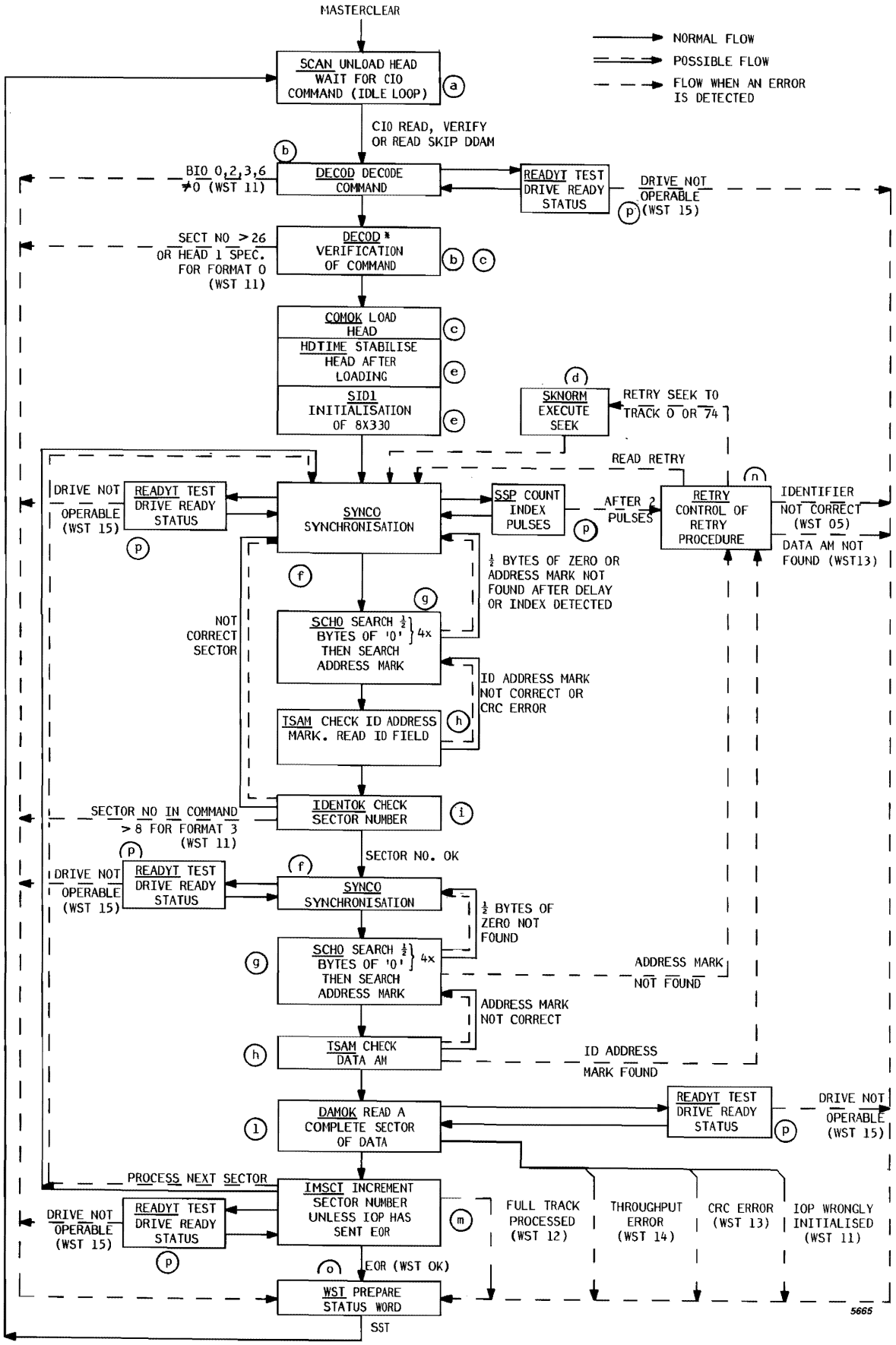

Figure 2.11d GENERAL FLOWCHART FOR A CIO READ, VERIFY OR READ SKIP SECTORS WITH DDAM COMMAND

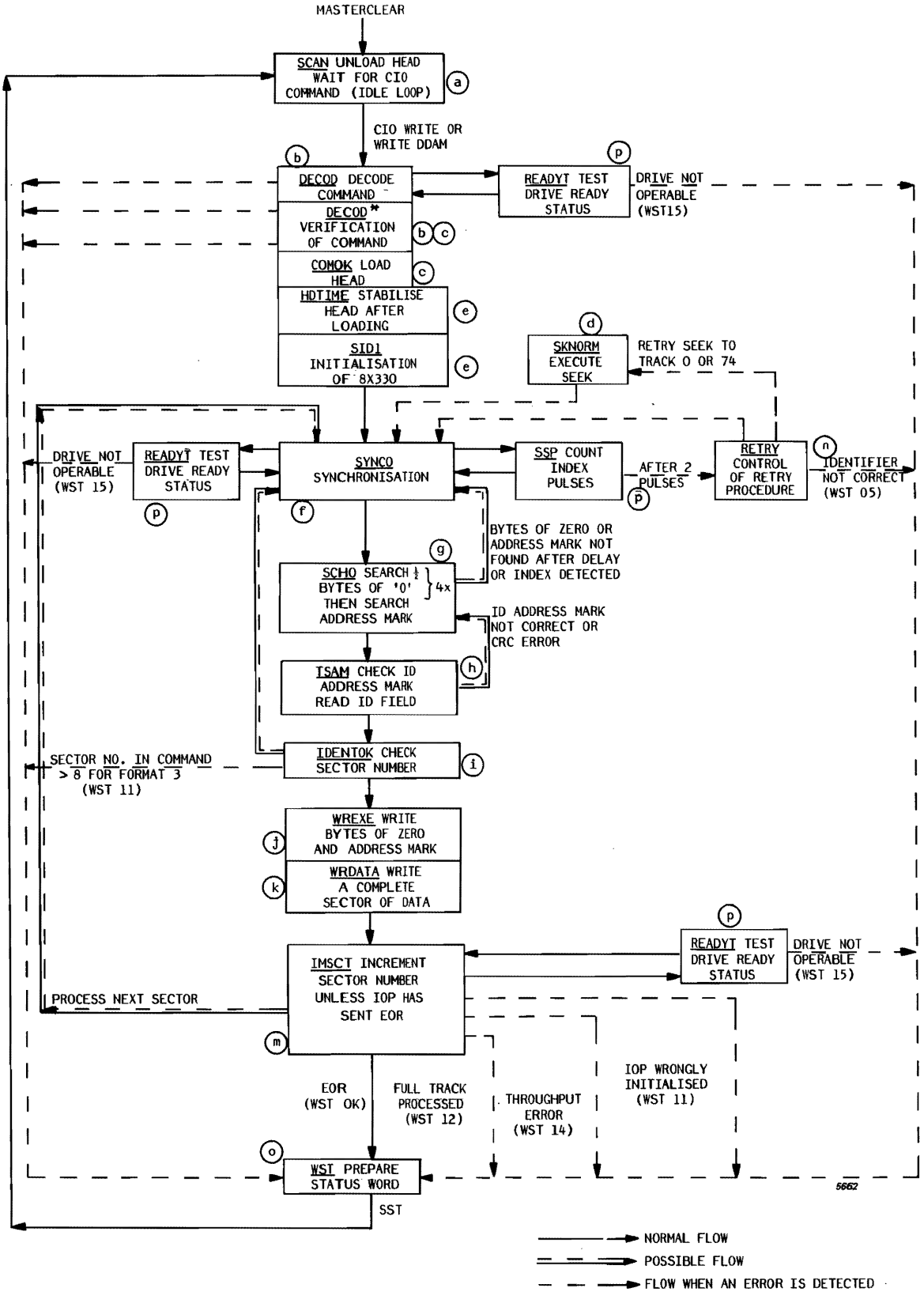

Figure 2.11e GENERAL FLOWCHART FOR A CIO WRITE OR WRITE WITH DDAM COMMAND

3 DETAILED DESCRIPTION

SECTION	3.1	BUS INTERFACE	PAGE 3-2
	3.1.1	CU Initialisation	3-2
	3.1.2	CU Addressing	3-2
	3.1.3	Command Decoding	3-2
	3.1.4	Break/Interrupt Logic	3-3
	3.2	DATA HANDLING LOGIC	3-5
	3.2.1	Memory to Disc Drive (Write Operation)	3-5
	3.2.2	Disc Drive to Memory (Read Operation)	3-5
	3.3	DISC DRIVE OPERATION	3-7
	3.3.1	Drive Selection	3-7
	3.3.2	Drive Control	3-7
	3.4	CU CONTROL	3-8
	3.4.1	Microprocessor 8X300	3-8
	3.4.2	Floppy Disc Controller 8X330	3-8
	3.4.3	Microprogram	3-9

LIST OF ILLUSTRATIONS

FIGURE	3.1	EXCHANGE TIMING DIAGRAM	3-3
	3.2	TYPICAL TRANSFER SEQUENCE FOR READ OPERATION	3-6
	3.3	USE OF FLOPPY CONTROLLER (8X330) INTERNAL REGISTERS	3-11
	3.4	USE OF MICROPROCESSOR INTERNAL REGISTERS	3-14
	3.5	TIMING DIAGRAM FOR TRANSFER OF DATA IN 8X330	3-15
	3.6(a)-(o)	MICROPROGRAM FLOW CHARTS	3-16

LIST OF TABLES

TABLE	3.1	CONTENTS OF PROM 5081	3-4
	3.2a	MICROPROCESSOR SIGNAL NAMES	3-10
	3.2b	FLOPPY DISC CONTROLLER SIGNAL NAMES	3-10
	3.3	EXPLANATION OF ABBREVIATIONS USED	3-12

3.1 BUS INTERFACE (REFER TO FIGURE 4.1)

3.1.1 CU INITIALISATION

The CU is initialised by the system general reset signal CLEARN. This occurs:

- During a normal switch on sequence
- During an automatic restart sequence after a power failure
- After operation of the control panel Master Clear button.

Signals CLEAR and CLEARAN are enabled which reset the main registers and flip-flops of the CU, reset the floppy disc controller chip 8X330 and reset the microprocessor 8X300 to instruction /00. The CU as a whole is thus reset to the inactive state.

3.1.2 CU ADDRESSING

The CU address is chosen with four U-links on the card. The CPU or IOP initiates a command by setting the address and command code on the MAD lines and activating timing signal TMPN. The address on MAD lines 12-15 is compared with the CU address in comparator chip C4. The chip is enabled by signal TMP. If the address is correct signal ARE goes high, which with signal TMP generates AREN. After a time delay selectable with a U-link, TSMAN goes low which with ARED generates timing signal TSMN, (see figure 3.1). When signal ARE goes high and while TSMAN is still high, MAD line 03 is enabled as signal EORZ1N. MAD03 is the end of transfer bit (EOR) sent by the IOP to indicate when an exchange is finished. If MAD03 is high, signal FEORN is set low. Signal FEORN is also clocked into register E3 which is scanned by the microprocessor.

3.1.3 COMMAND DECODE

TMP also clocks the command code on MAD04, 8 and 9 into register C1 along with flag signals F0 and F1. These five signals are decoded by PROM A5 which is enabled by signal AREDN. The flag signals are used to ensure that the CU is in the correct operating (status) state before a command is accepted (see paragraph 2.4.1). The outputs from the PROM are shown in table 3.1. When a command is accepted signal ACAN goes low which with TMP generates accept command signal ACN, (see figure 3.1).
When a CIO command is accepted signal CIOZ1N goes low which clocks the drive address code on MAD10 and 11 into register D3. The outputs of this register are decoded to enable one of the drive selection signals SELON-3N, (figure 4.3) Signals DN0 and DN1 are also clocked into register E3.
Four of the output signals from the PROM are used to operate the four latches F4. The outputs of the latches FECH, FINPUT, FCIO and FEORN are clocked into register E3 (these indicate the CU status).

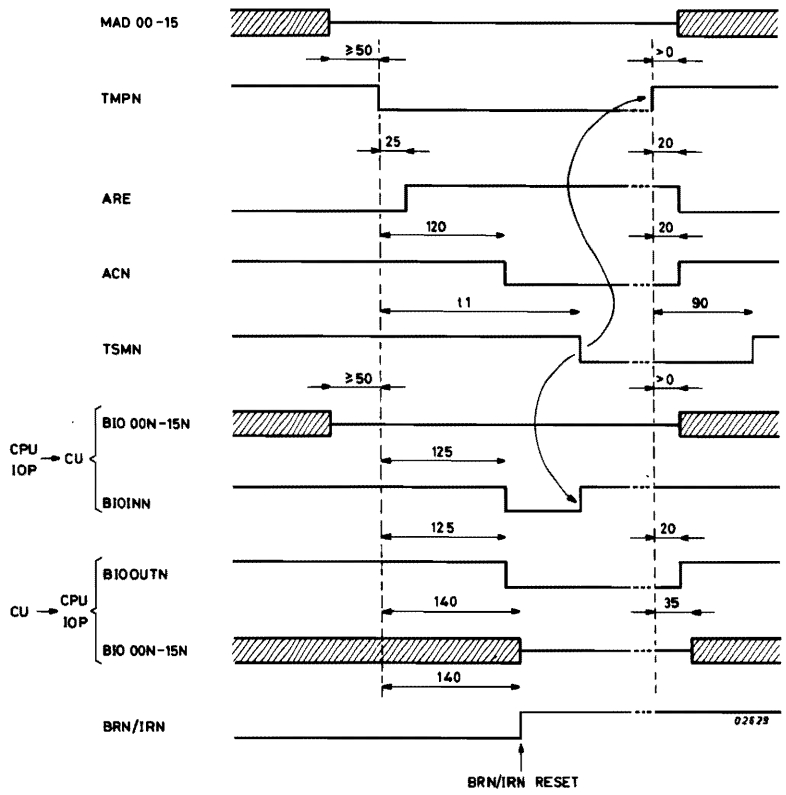

Figure 3.1 EXCHANGE TIMING ON GP BUS-S

3.1.4 BREAK/INTERRUPT LOGIC

The four operating states of the CU (see paragraph 2.4.1) are determined by flag signals F0 and F1 which are generated by signals FCIO, FINPUT and FECH. The flag signals control command acceptance and the sending of break and interrupt requests, BRN and IRN.
IRN is sent

- at the end of a successfully completed CIO command
- if an error is detected during the execution of a CIO command
- if a CIO command is received for a drive which is not ready
- if, while the CU is not busy, a drive previously not ready becomes ready

BRN is sent before each data word is transferred during a data exchange.
Control Units used with the UPL bus and with binary coded interrupts are provided with an interrupt priority encoder chip IHC. This chip is plugged into a chip socket mounted on the card, when required. The chip sends a Binary Coded Interrupt, BCI, synchronised with an Incoming Clock pulse, INCL, instead of the discrete interrupt IRN. The priority level of this interrupt is determined with six U-links on the card, when used. Figure 3.2 shows typical data transfer sequence showing the flag signals and the CU operating states.

Command type (indicated by MAD04, 08, 09)	Address (input to PROM)					CU Operating State (indicated by flags F0 and F1)	PROM Output							
	MADXXC			F1C	F0C		ACAN	BUSYN	OUTN	INN	CIOZ1N	INPUTZ1AN	INPUTZ0AN	ECHZOAN
	09	08	04											
OTR A	0	0	0	0	0		1	1	1	1	1	1	1	1
	0	0	0	0	1		1	1	1	1	1	1	1	1
	0	0	0	1	0		1	1	1	1	1	1	1	1
	0	0	0	1	1	EXCHANGE	0	1	1	0	1	0	1	0
INR A	0	0	1	0	0		1	1	1	1	1	1	1	1
	0	0	1	0	1		1	1	1	1	1	1	1	1
	0	0	1	1	0		1	1	1	1	1	1	1	1
	0	0	1	1	1	EXCHANGE	0	1	0	1	1	1	0	0
CIO Halt	0	1	0	0	0	INACTIVE	0	1	1	1	1	1	1	1
	0	1	0	0	1	WAIT STATUS	0	1	1	1	1	1	1	1
	0	1	0	1	0	EXECUTE	0	1	1	1	1	1	1	1
	0	1	0	1	1	EXCHANGE	0	1	1	1	1	1	1	1
TST	0	1	1	0	0	INACTIVE	0	1	1	1	1	1	1	1
	0	1	1	0	1	WAIT STATUS	0	0	1	1	1	1	1	1
	0	1	1	1	0	EXECUTE	0	0	1	1	1	1	1	1
	0	1	1	1	1	EXCHANGE	0	0	1	1	1	1	1	1
OTR B	1	0	0	0	0		1	1	1	1	1	1	1	1
	1	0	0	0	1		1	1	1	1	1	1	1	1
	1	0	0	1	0		1	1	1	1	1	1	1	1
	1	0	0	1	1	EXCHANGE	0	1	1	0	1	0	1	0
INR B	1	0	1	0	0		1	1	1	1	1	1	1	1
	1	0	1	0	1		1	1	1	1	1	1	1	1
	1	0	1	1	0		1	1	1	1	1	1	1	1
	1	0	1	1	1	EXCHANGE	0	1	0	1	1	1	0	0
CIO Start	1	1	0	0	0	INACTIVE	0	1	1	0	0	0	1	1
	1	1	0	0	1		1	1	1	1	1	1	1	1
	1	1	0	1	0		1	1	1	1	1	1	1	1
	1	1	0	1	1		1	1	1	1	1	1	1	1
SST	1	1	1	0	0		1	1	1	1	1	1	1	1
	1	1	1	0	1	WAIT STATUS	0	1	0	1	1	1	1	0
	1	1	1	1	0		1	1	1	1	1	1	1	1
	1	1	1	1	1		1	1	1	1	1	1	1	1

Note: CIO Halt, OTR B and INR B commands are not used with this CU although they are programmed into the PROM.

Table 3.1 CONTENTS OF PROM 5081 (Loc. A5)

3.2 DATA HANDLING LOGIC

3.2.1 MEMORY TO DISC DRIVE (WRITE OPERATION)

16-bit words are loaded from the bus (BIOOON-15N) into four tranceivers type 2917A by signal BIOINN during a CIO Start or OTR command.The data is set onto the CU internal bus IVBON-7N, eight bits at a time, by signals BUSMSBN (8 msb) and BUSLSBN (8 lsb), controlled by the micro- processor (figure 4.2).

For a CIO command the BIO lines contain control information used by the microprocessor to control the transfer.
For an OTR command the BIO lines contain a data word to be written on the disc. The data is transferred 8 bits at a time via the microprocessor to the Floppy Disc Controller type 8X330 (figure 4.3) which performs parallel to serial conversion. This chip also generates the CRC word and encodes the data before gating it to the disc drive as signal WDN. The 8X330 can also apply precompensation to the 'write' data, which compensates for the fact that flux changes on the disc which are very close together tend to alter their relative positions. Precompensation is used on tracks 43 to 76 (as for LWC) in formats 1 and 2 only. The internal write clock of the 8X330 is synchronised with the externally connected quartz crystal Y2 (8MHz).

3.2.2 DISC DRIVE TO MEMORY (READ OPERATION)

Serial data input RDLN to the CU is input to the 8X330 chip (figure 4.3) which decodes the data, performs the CRC error check and performs serial to parallel conversion. Parallel data is loaded via the microprocessor (figure 4.2) into trancievers 8 bits at a time by signals CLIVMSBN (8 msb) and CLIVLSBN (8 lsb). 16 bit words are set onto the BIO lines of the system Bus by signal BIOOUTN during either an INR or SST command.
The internal read clock of the 8X330 is synchronized with incoming data by a phase locked loop. The frequency of the clock is controlled by signal CCO. A phase detector internal to the 8X330 detects any phase difference between clock pulses and input data pulses. Output signals PUP or PDN from the 8X330 are pulse width modulated signals which indicate that the clock frequency is low or high respectively. These signals operate into the charge pump of chip type MC4044 which adjusts the level of signal CCO accordingly, via a low-pass (active) filter.

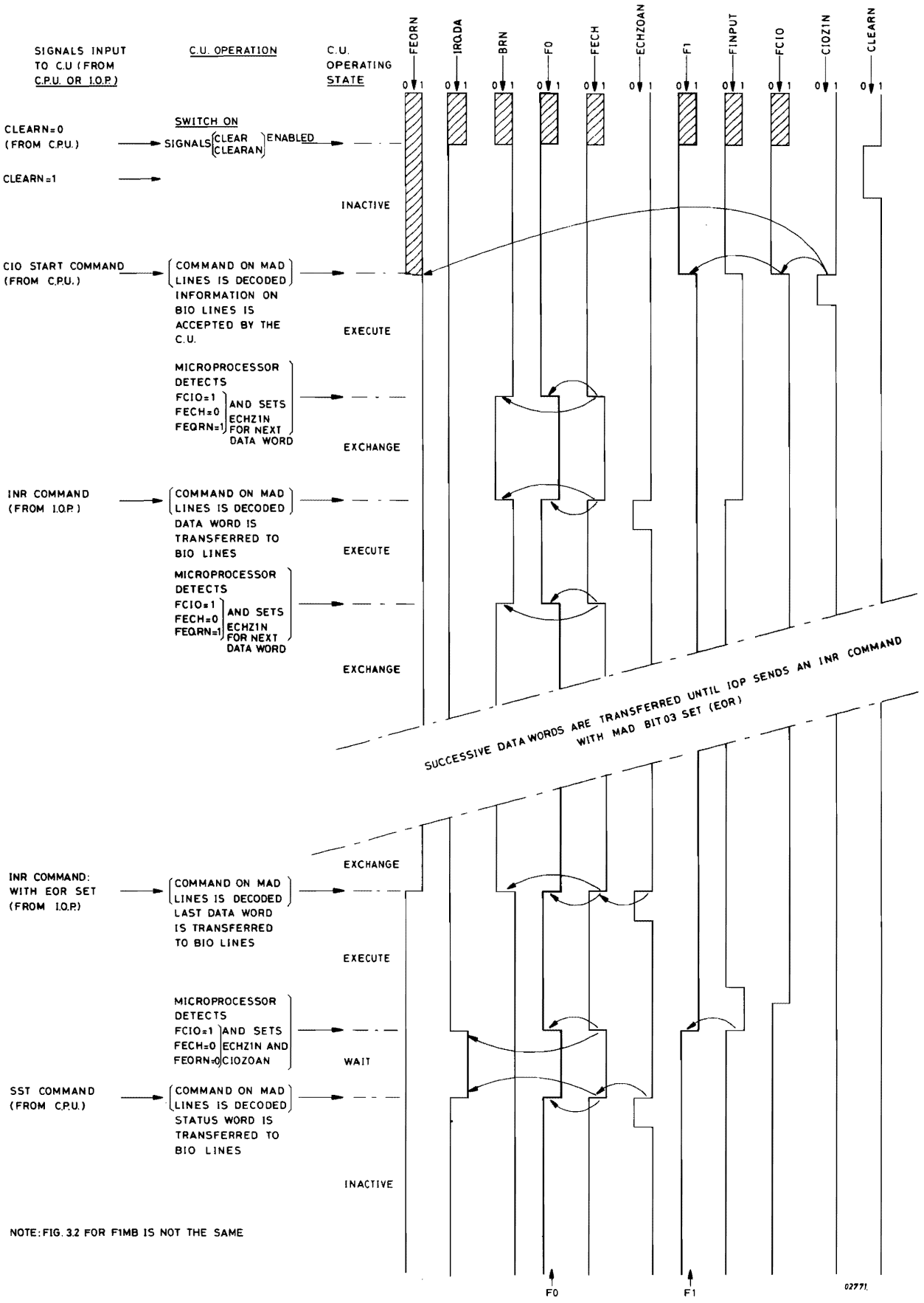

Figure 3.2 TYPICAL TRANSFER OF READ OPERATION SHOWING CU OPERATION STATES

3.3 DISC DRIVE OPERATION (REFER TO FIGURE 4.3)

3.3.1 DRIVE SELECTION

Drive 'Ready' status is indicated by signals RDYON-3N which are input at transceiver G5 and monitored by the microprocessor. Drives are selected with SELON-3N which are generated by decoding signals DN0, DN1, DNON, DN1N, see paragraph 3.1.3.

3.3.2 DRIVE CONTROL

Drive control signals LWCN and DIRN are generated by the microprocessor. Their function is described in paragraph 2.2.3.
The other drive control signals are generated by the Floppy Disc Controller chip 8X330. Signals WEN, HLN and STEPN are described in paragraph 2.2.3. If during a Write command a power failure occurs signal RSLN from the power supply goes low and inhibits the write enable signal, WEN, thus protecting the disc.
Signals DC4ON, 42N, 45N, 47N, 48N, 50N have different functions according to the type of drive being used with the CU (see table 1.3). In particular DC50N, which with type 9404 drive is an output signal from the CU (door lock 3) and with type 9406 drive is an input signal to the CU (discette type). This selection is made with a U-link on the card, see figure 4.3. When controlling a type 9404 drive the Floppy Controller chip drives signal DC 50N via a NAND gate D5 and signals DC50N and DS50N are not connected. The NAND gate is enabled with signal DDN which is set high with another U-link with signal FLOEMIT, see figure 4.1.

When controlling a type 9406 drive these two U-links are in their alternative positions so that DC50N is input to the Floppy Controller chip as signal DS50N and signal DDN is set low (ground) which inhibits the NAND gate.
Drive status signals INDN, TRON, WRPN are input directly to the Floppy Controller chip. Their functions are described in paragraph 2.2.1/2.2.2/2.2.3.

Note: At the CU level the drive Ready, Select and Door Lock signals use numbers 0-3. At the drive level the corresponding signals use the numbers 1-4 for the four drives.

3.4 CU CONTROL

3.4.1 MICROPROCESSOR 8X300 (FIGURE 4.2)

The 8X300 performs the main control function of the CU card under control of the microprogram. The microprogram is stored in PROM's located at R1 and R3, which are addressed via address lines RA02-12. The microprocessor performs the following major functions.

. generation of CU internal control signals
. control of floppy disc controller chip 8X300
. generation of certain disc control signals
. control of interrupt (IRN) and break (BRN) signals
. generation of status word
. master clock output MCLK is used as a synchronous clock signal for all logic on the CU card.

MCLK is generated by the microprocessor during the last quarter of each instruction cycle. This cycle time is set at 400ns by the link connected quartz crystal Y1. The CU internal control signals are clocked into register L1 from the IV bus by signal SELIVLB.

A detailed description of the microprocessor is given in the data sheet included in chapter 5. Table 3.2(a) cross refers the signal names used in data sheets with those used in the logic diagrams in chapter 4.

3.4.2 FLOPPY DISC CONTROLLER 8X330 (FIGURE 4.3)

This chip is controlled from the microprocessor with signals SCA, WCA and LBA. The chip is synchronised with microprocessor clock pulse MCLK. The chip performs the following functions:

. Serial/parallel conversion of data
. Data encoding/decoding (FM, MFM) - programmed from 8X300
. Read data synchronisation using a phase locked loop
. Data/clock pulse separation for Read data
. CRC error character generation/checking
. Address mark detection - programmed from 8X300
. Data Precompensation during write mode in MFM on cylinders 43-76.

A detailed description of the Floppy Controller is given in the data sheet included in chapter 5. Table 3.2b cross-refers the signal names used in the data sheets with those used in the logic diagrams in chapter 4.

3.4.3 MICROPROGRAM

A detailed flow diagram is given in figures 3.6(a) - (o), the general flow of the whole microprogram being shown in figure 2.11. The hexidecimal characters (/XXX) shown opposite each step refer to the hexadecimal address shown in the listing.
During a Write operation data is transferred via:

- BIO lines (from IOP)
- microprocessor 8X300
- 8X330 DATA register
- 8X330 DATA shift register (which performs parallel/serial conversion)
- WD the serial data output line of the 8X330, under control of the microprogram. This is illustrated in figure 3.5.

During operation of the microprogram, use is made of the internal registers of both the 8X300 and the 8X330. Figure 3.3 shows the use of the 8X330 registers and table 3.3 explains the abbreviations used. Figure 3.4b shows the use of the microprocessor internal registers which vary according to the part of the microprogram in which they are used. Figure 3.4a shows the use of the other discrete registers mounted on the CU card.

8 X 300:

Pin No.	Signal Mnemonic		Signal Function
	Data Sheet	Logic Diagrams	
7-2 49-45	A2-A12	RA2-RA12	PROM Address Lines
13-28	I0-I15	I00-I15	Instruction Lines from PROM's
41-38 36-33	$\overline{IVB0}$-$\overline{IVB7}$	IVB0N-IVB7N	Bi-directional data lines
10,11	X1,X2	CX1,CX2	Microprocessor Clock Input
43	$\overline{RESET}$	CLEARAN	Microprocessor reset signal
42	MCLK	MCLK	Microprocessor clock signal
29,30	SC,WC	SC,WC	Indicate type of output from microprocessor. Used to control floppy controller 8X330.
32	$\overline{RB}$	RBN	Selects one of two sets of I/O devices. Used to control 8X330.
44	$\overline{HALT}$	HALTN	Microprocessor inhibit (held high)
9,8 31	A0,A1 $\overline{LB}$	Not used	

Table 3.2a MICROPROCESSOR SIGNAL NAMES

8 X 330:

Pin No.	Signal Mnemonic used in		Signal Function
	Data Sheet	Logic Diagram	
25-32	$\overline{IV0}$-$\overline{IV7}$	IVB0N-IVB7N	Bi-directional data lines
23	SC	SCA	Indicates that information from 8X300 is an address
24	WC	WCA	Indicates that information from 8X300 is data
21	$\overline{ME}$	LBA	RB (=$\overline{LBA}$) selects 8X300
22	MCLK	MCLK	Microprocessor clock signal
19	$\overline{WGate}$	WEAN	Disc write enable
20	$\overline{PFail}$	Clearn	A low signal disables $\overline{WGate}$
4	$\overline{Data_W}$	WDAN	Write data to disc
5	$\overline{Data_r}$	RDLN	Read data from disc

Table 3.2b FLOPPY DISC CONTROLLER SIGNAL NAMES

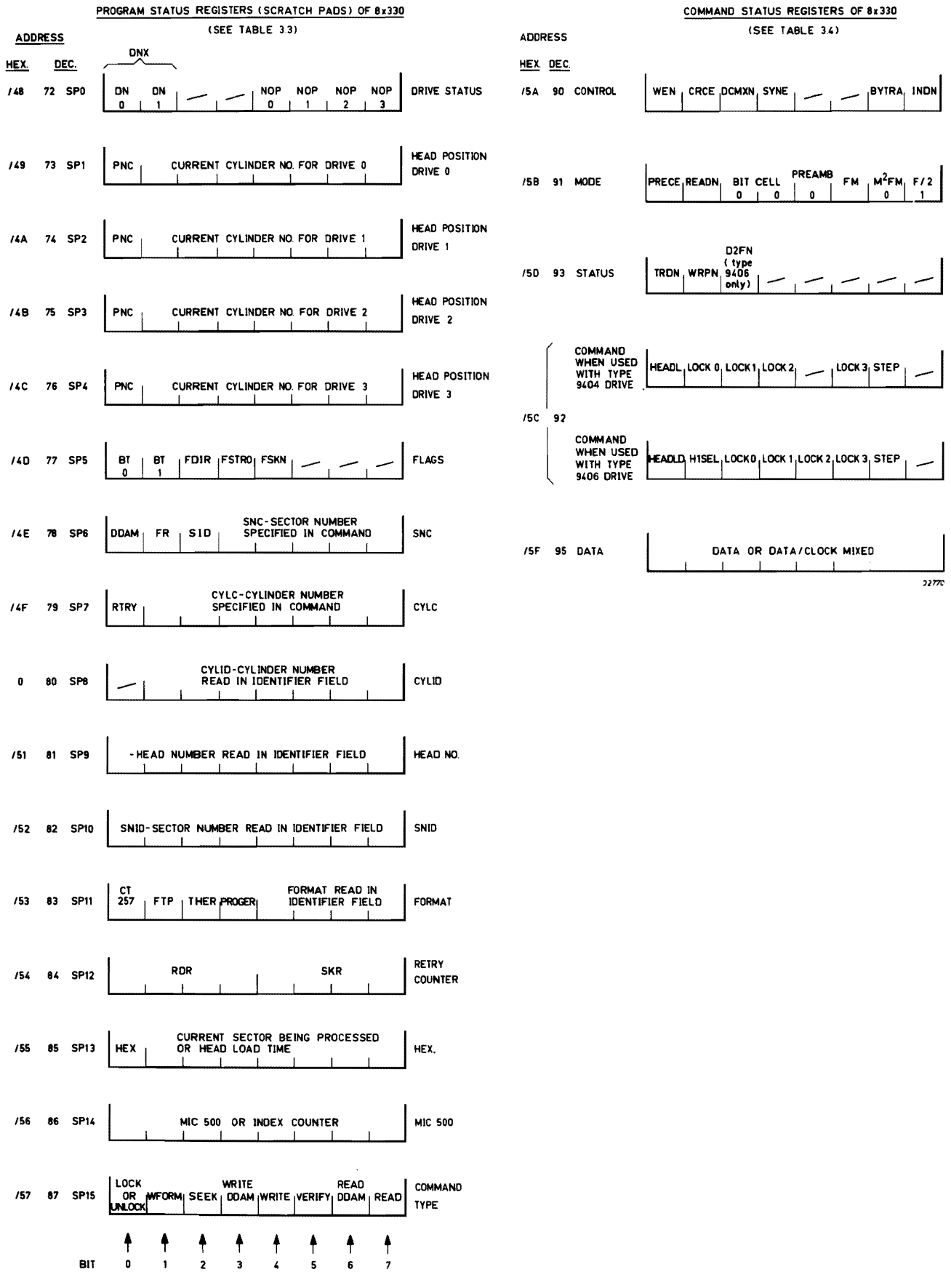

Figure 3.3 USE OF FLOPPY CONTROLLER (8X330) INTERNAL REGISTERS

BIT CELL	Indicates the bit cell in which the first data change is expected within an address mark. Always set = 00 (bit cell 0).
BT 1	Set = 1 when first bad track correction is made
BT 2	Set = 1 when second bad track correction is made
BYTRA	Set = 0 when DATA register of 8X330 is ready for the transfer of a byte or half byte of data. In Read mode the data must be transferred from the data register to the 8X330. In Write mode the data must be transferred from the 8X330 to the DATA register. Set = 1 when DATA register is selected (in READ or WRITE mode) by 8X330.
CION	Set = 0 when a CIO command is received. Reset in Wait status by 8X330.
CIOZO	When set = 1 (by 8X330) it sets CION = 1 : (CION is inverse of signal FCIO.
CRCE	When set = 1 CRC word is calculated by 8X330 (if SYNE is set = 1) When set = 0 CRC register becomes a source of data
CT256	Msb of word counter, during write mode
CTX	Msb of word counter, during read mode
D2FN	Set = 0 (by 9406 drive only) if discette being used is double sided Set = 1 if discette being used is single sided
DCMXN	Set = 0 when DATA register contains a 1/2 byte of data/clock pulses interleaved. Set = 1 when DATA register contains a byte of data only.
DDN	Set = 0 when CU is used with 9406 drive Set = 1 when CU is used with 9404 drive
DDAM	Set = 1 if a deleted data address mark has been detected
DIR	Set = 0 to displace drive head towards track 0 Set = 1 to displace drive head towards track 74
DNO,DNL, (DNX)	Drive number selected with the last CIO command
DNON,DNLN (DNXN)	Drive number selected with current CIO command (inverted)
ECHN	Set = 0 to send a break or interrupt request. Reset by INR, OTR, or SST.
ECHZ1	When set = 1 by 8X330 it sets ECHN = 0 : (ECHN is inverse of signal FECH.
EOR	Set = 1 (by INR or OTR) when next word transfer is the last (Reset = 0 by the next CIO command: (EOR is inverse of signal FEORN)
F/2	Always set = 1. The 8X330 half frequency facility is not used.
FDIR	Used to memorise the direction the drive head has just moved (ie DIR set = 0 towards track 0, set = 1 towards track 74
FM	Set = 1 for FM recording. Set = 0 for MFM recording.
FR	Set = 1 if a retry procedure has been performed or started.
FSTRO	Set = 1 for a seek to zero (normal or retry)
FSK	Set = 0 for other seeks (normal or retry)
seek flags FSKN	Set = 1 for a normal seek Set = 0 for a retry seek
FTP	Set = 1 if a full track is processed and transfer is not stopped by IOP.
H1SEL	Set = 0 to select head 0, set = 1 to select head 1 (9406 drive only).
HEADL	Set = 1 to load head in floppy disc drive.

Table 3.3 EXPLANATION OF ABBREVIATIONS USED

HEX	Set = 0 if SP13 contains number of sector currently being processed Set = 1 if SP13 contains head load time: this is the time for the head to stabilise after a head load
INDN	Index pulse from drive. Active = 0
INPUTN	Set = 0 by CIO or OTR Set = 1 by INR Indicates direction of an exchange. Can be be set = 1 by µ pro after a CIO or set = 0 to block CIO commands. (INPUTN is inverse of signal FINPUT)
INZO,INZ2	When set = 1 (by 8X330) they set INPUTN =0 or 1 respectively
LOCKx	Set = 0 to lock the door of the corresponding drive (0 - 3) Set = 1 to unlock the door of the corresponding drive
LWC	Set = 1 for tracks 43 - 76 to select low write current
M^2FM	Always set = 0. The M^2FM recording mode is not used
MIC500	Number of times the MIC500 procedure must be repeated in order to wait the required length of time. (Each MIC500 = 500 microseconds)
NOPx	Set = 1 when corresponding drive (0 - 3) is not operable.
PNC	Set = 1 when head position of corresponding drive is not known.
PREAMB	Always set = 0 to indicate that the preamble data (before AM) is all zeroes.
PRECE	Set = 1 while writing in MFM for tracks 43 - 76 to enable precompensation.
PROGER	Set = 1 if a program error is detected.
RDR	Read retry counter. Initially set = 4.
RDYxN	Set = 0 when corresponding drive (0 - 3) is ready.
READN	Set = 0 for read. Set = 1 (with WEN = 0) for write. Set = 1 (with WEN = 1) for synchronisation before writing
RTRY	Set = 1 if a retry or bad track correction is currently being performed
SID	Set = 1 if an ID address mark is currently being searched for. Set = 0 if a data address mark is currently being searched for.
SKR	Seek retry counter. Initially set = 4.
SP0-15	Scratch pad registers of 8X330 - see figure 3.3.
STEP	Set = 1 for 500µs to step the head one track in the direction specified by DIR.
SYNE	When set = 0 the CRC register is set to all 'ones' and synchronisation of the PLL is enabled on Read Data (if READN = 1 and WEN = 1. When set = 1 CRC calculation begins as soon as the address mark is detected (if CRCE is set = 1). The AM is part of the CRC calculation.
THER	Set = 1 throughput error is detected.
TRON	Set = 0 when the drive head(s) is over track zero.
WEN	Set = 0 (with READN set = 1) for write mode.
WFORM	Set = 1 if a CIO Write Format command is received (this command executed by the CU).
WRPN	Set = 0 if the discette is write protected.

Table 3.3 EXPLANATION OF ABBREVIATIONS USED (CONTD)

8 X 300 LB - selection on IVB:

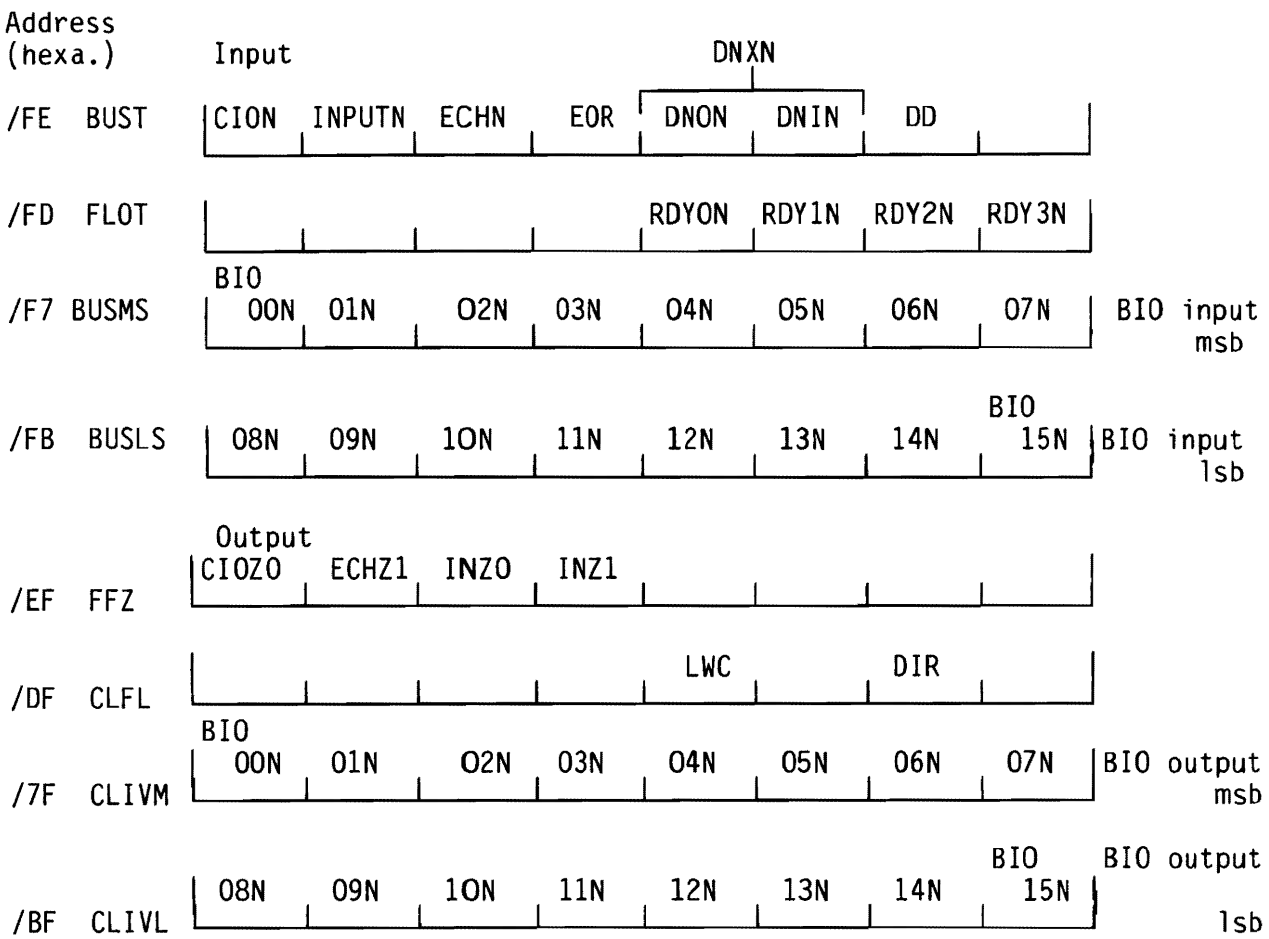

8 X 300 register:

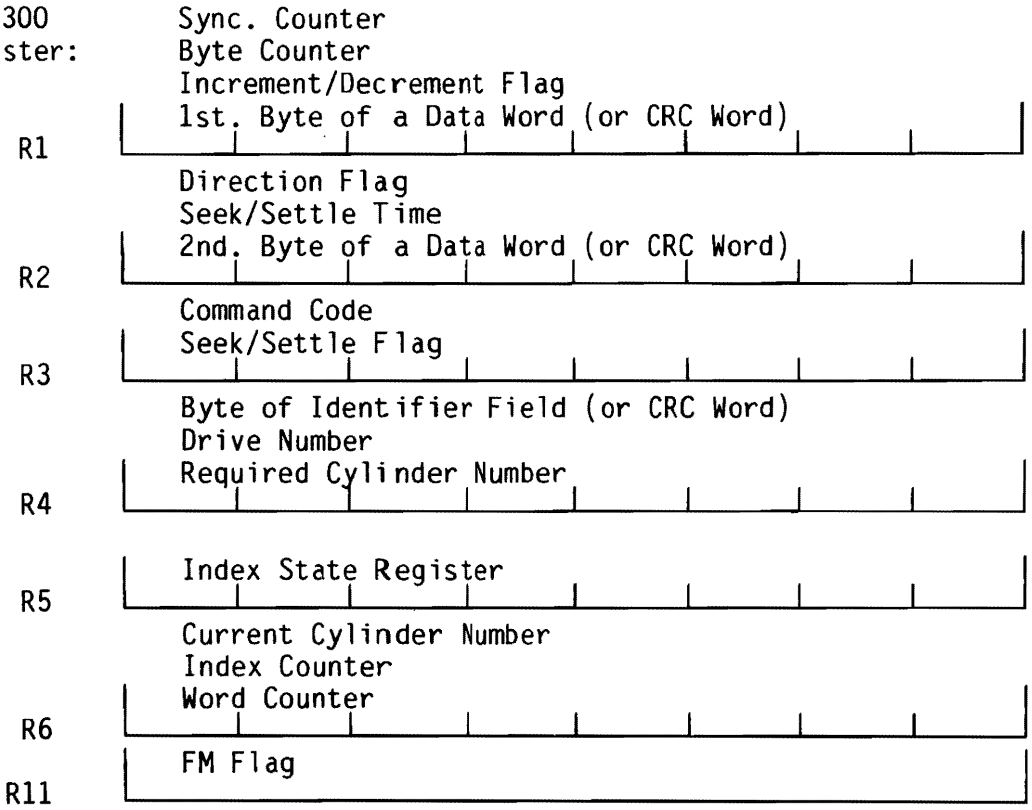

Figure 3.4 USE OF MICROPROCESSOR INTERNAL REGISTERS

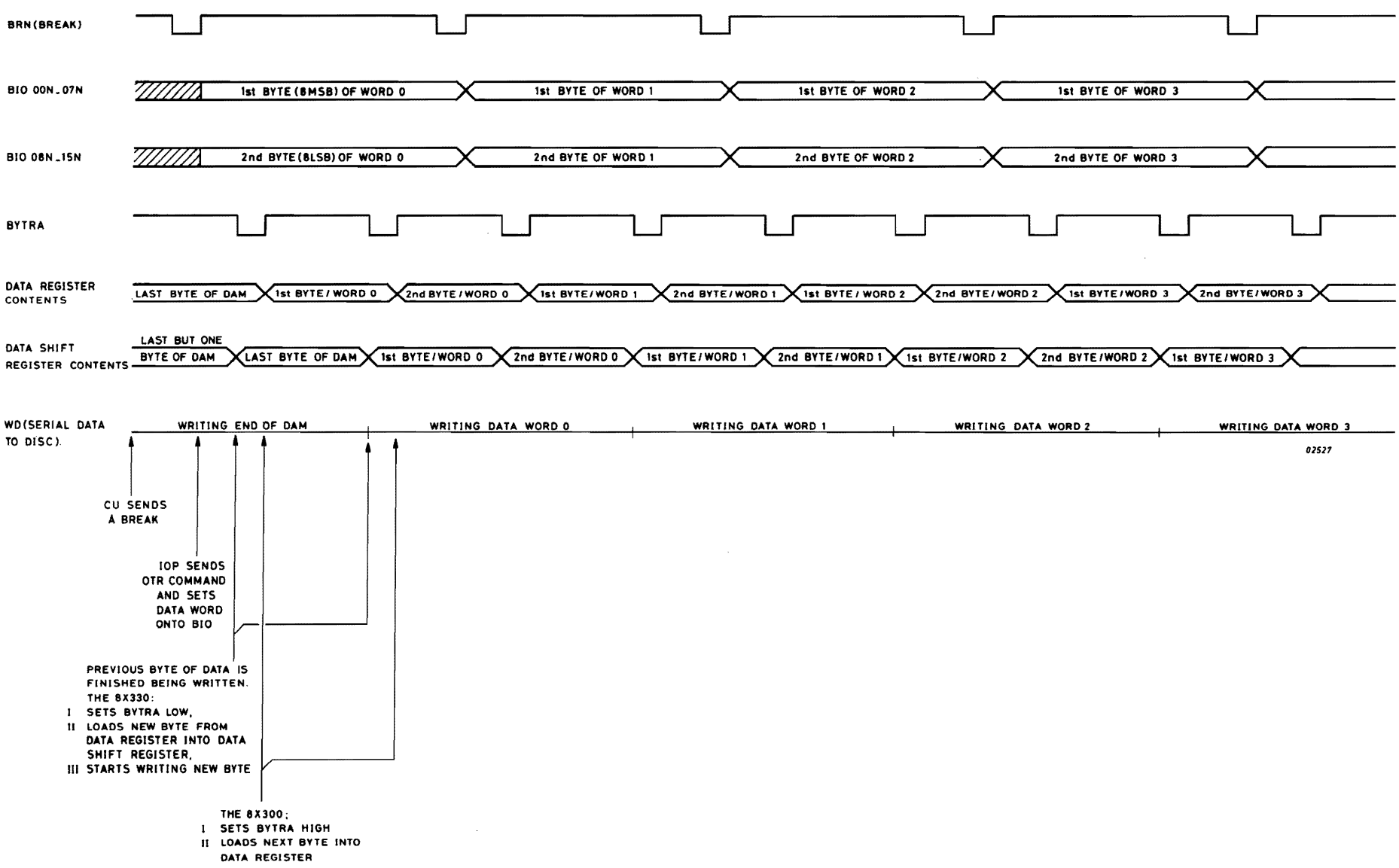

Figure 3.5 TIMING DIAGRAM FOR TRANSFER OF DATA VIA 8X330 - WRITE MODE

EXPLANATION:

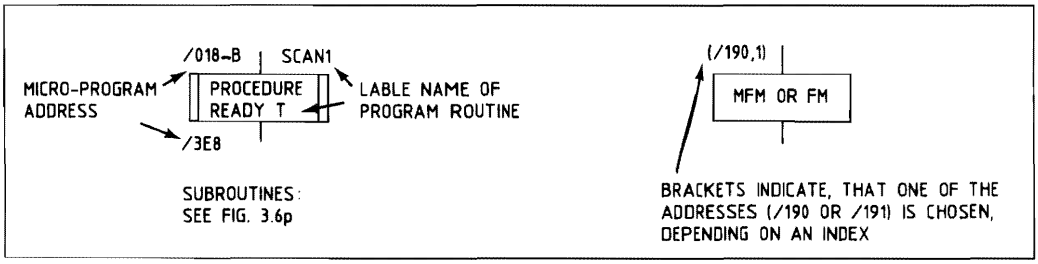

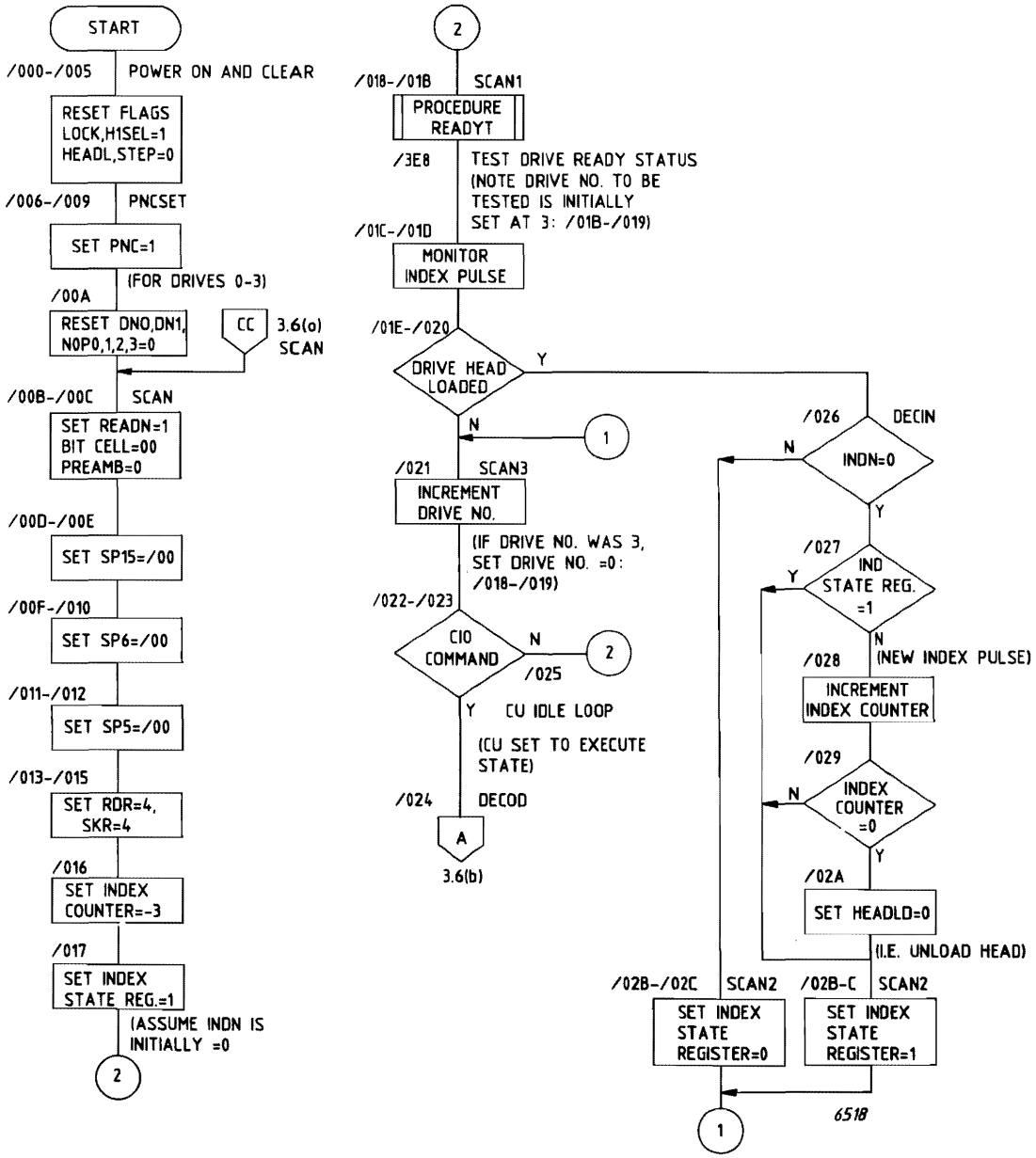

Figure 3.6a INITIALISATION AND SCAN ROUTINES

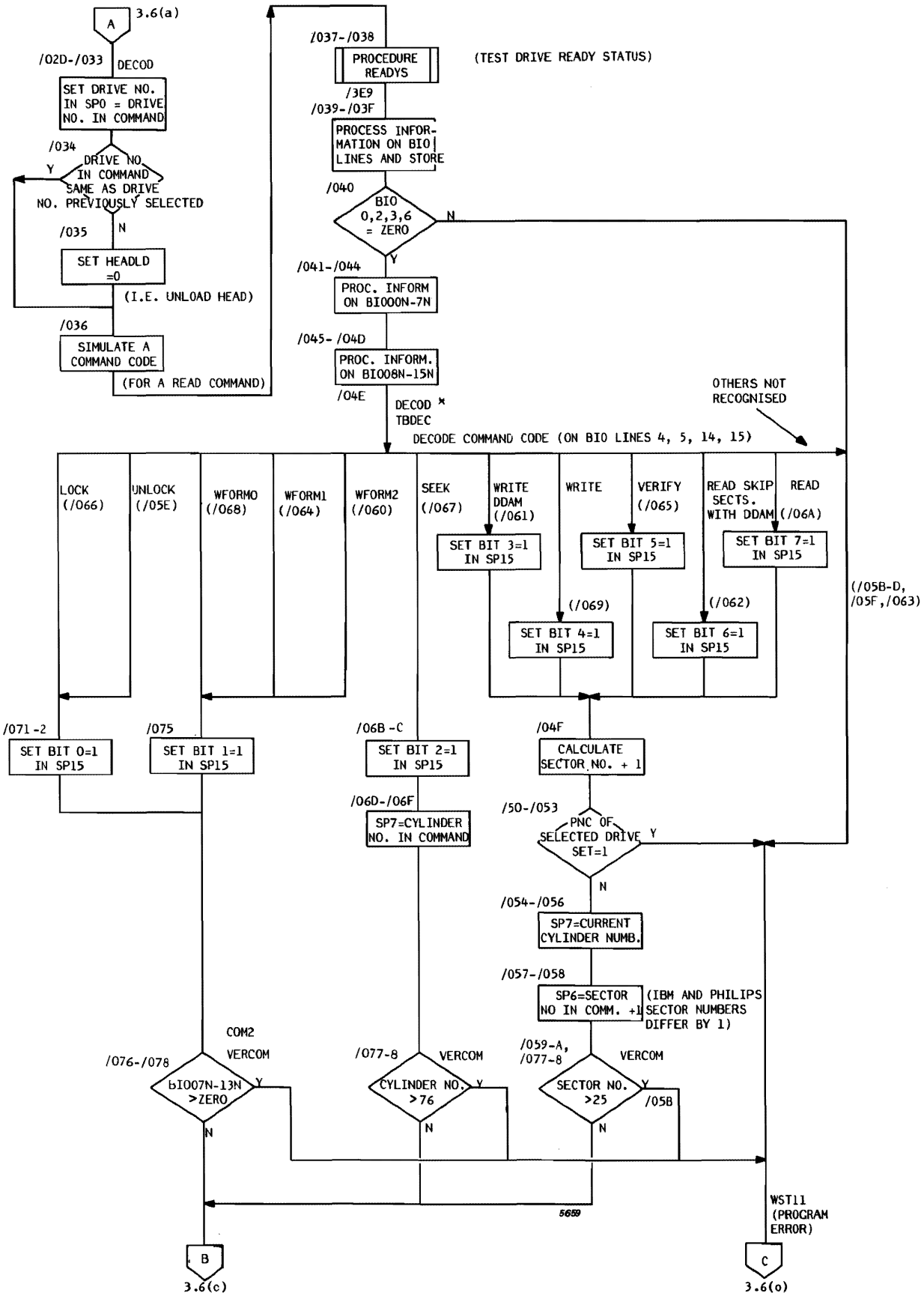

Figure 3.6b COMMAND DECODING

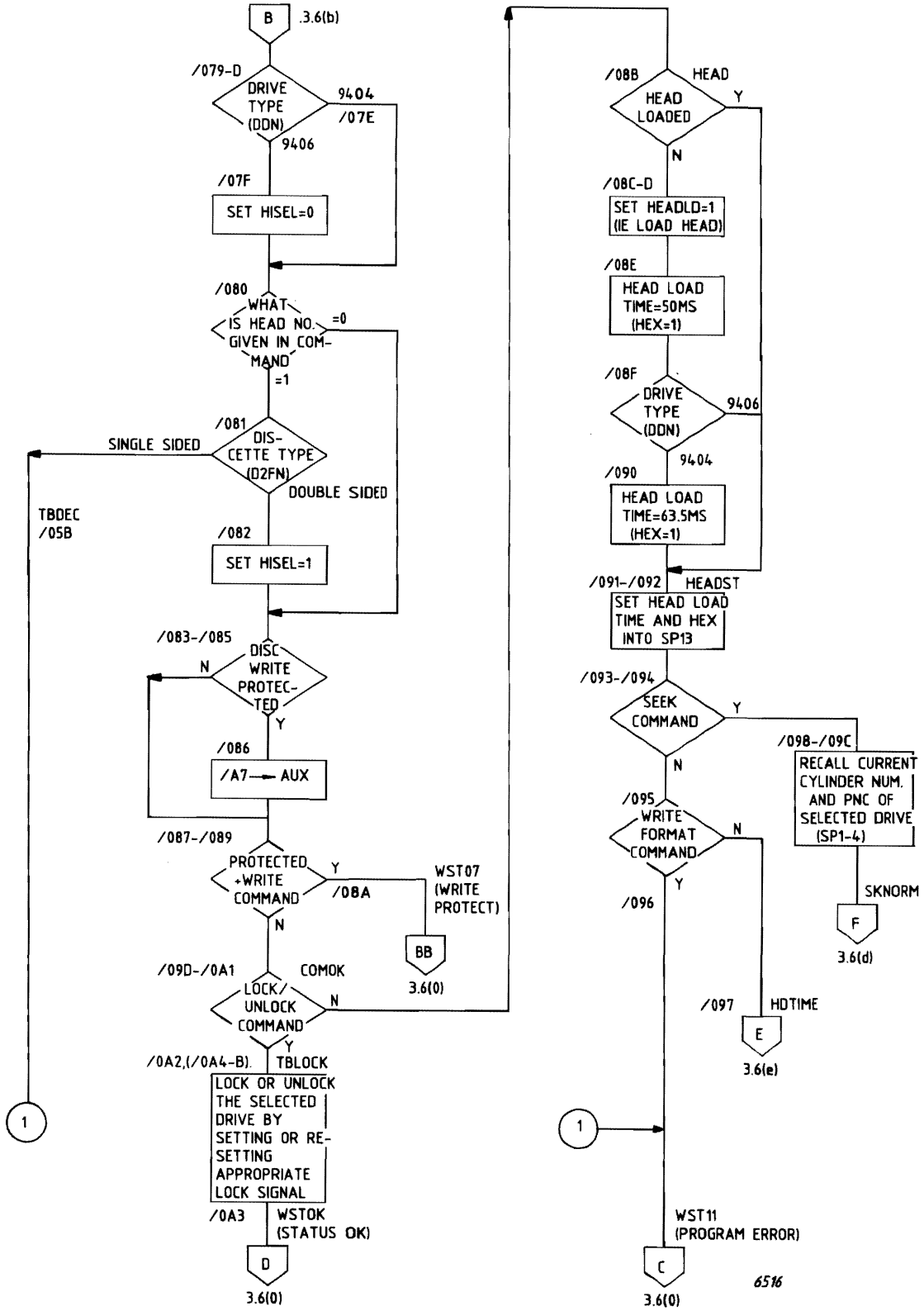

Figure 3.6c COMMAND DECODING

μ-PROGRAMTIMER

	9404	9406
HEAD LOAD TIME	63,5	50 Ms
SEEK TIME	10	3 Ms
SETTLING TIME	10	27 Ms

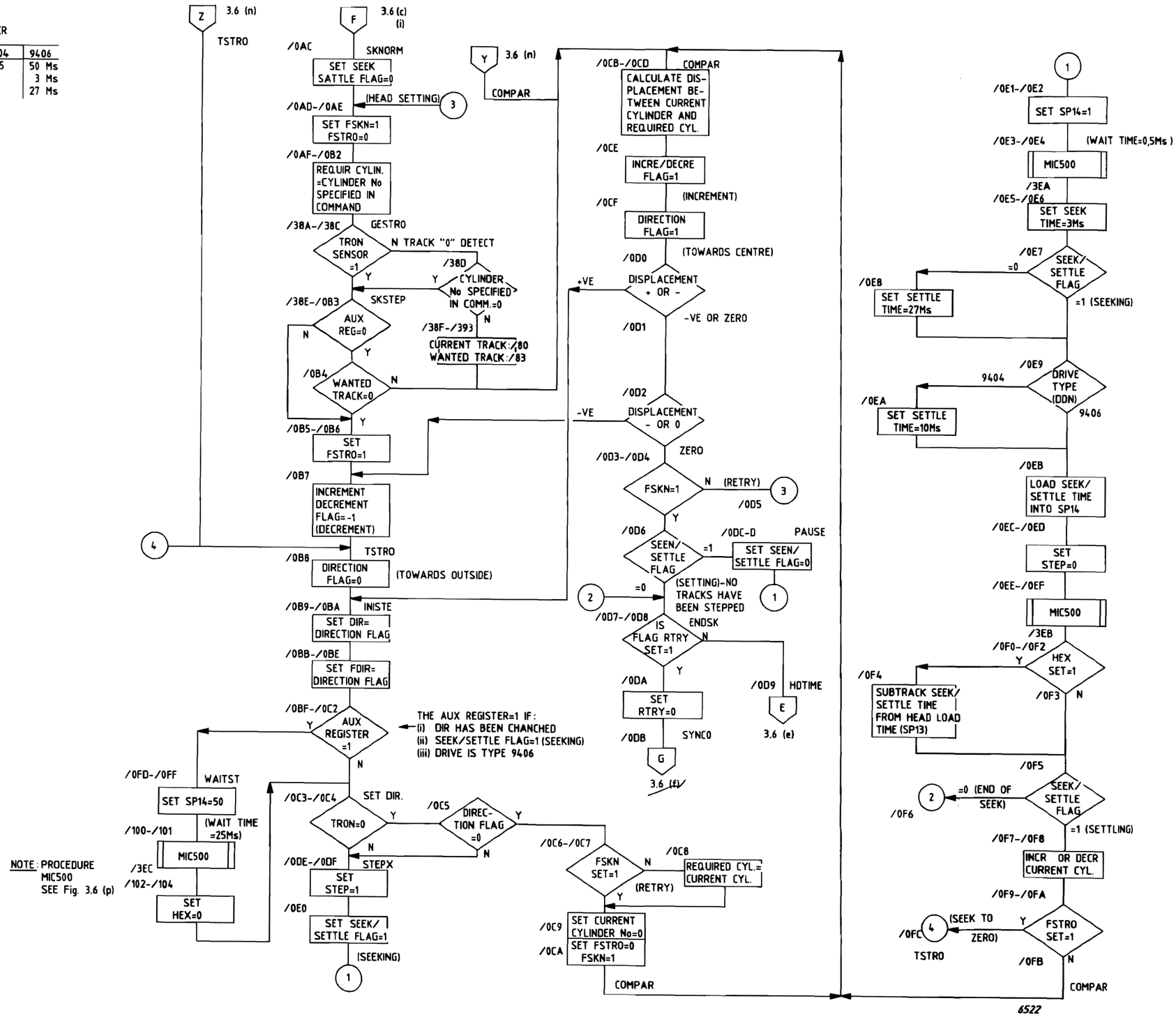

Figure 3.6d SEEK ROUTINE

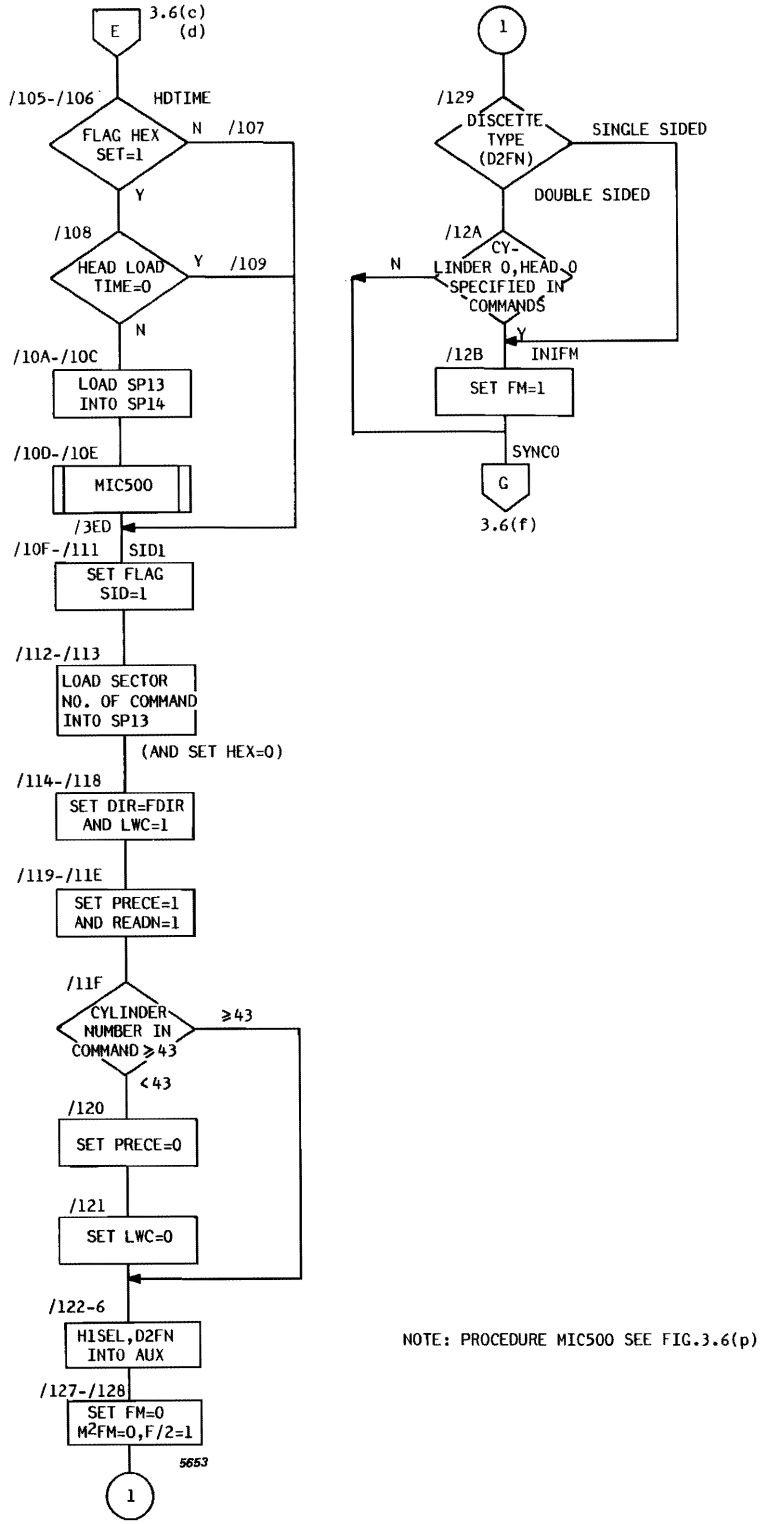

Figure 3.6e HEAD LOADING TIMER AND EXCHANGE PARAMETER CONTROL

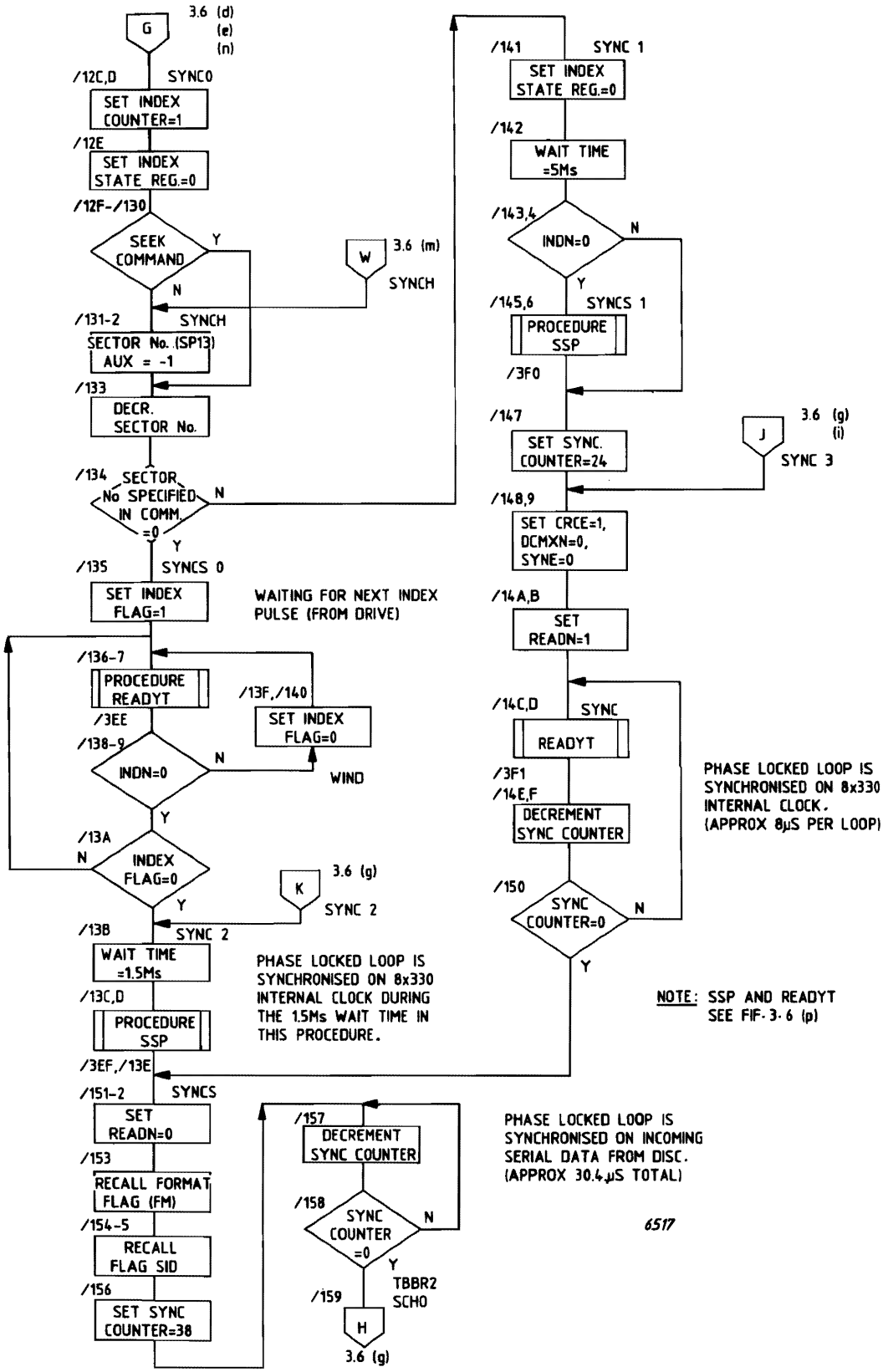

Figure 3.6f SYNCHRONISING READ CIRCUITS BEFORE SEARCHING FOR ZEROES

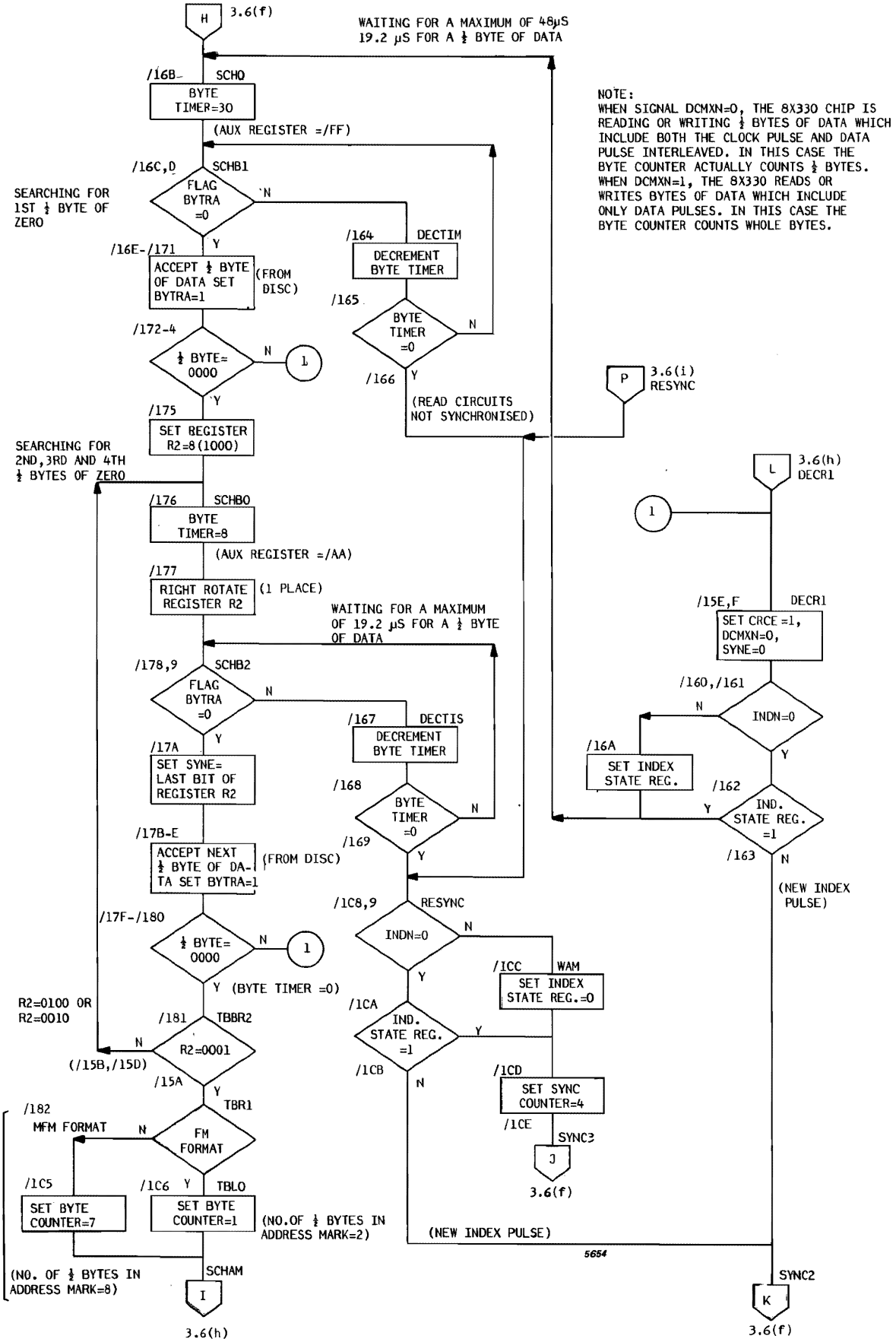

Figure 3.6g SEARCHING FOR FOUR HALF BYTES OF ZERO BEFORE SEARCHING FOR ADDRESS MARK

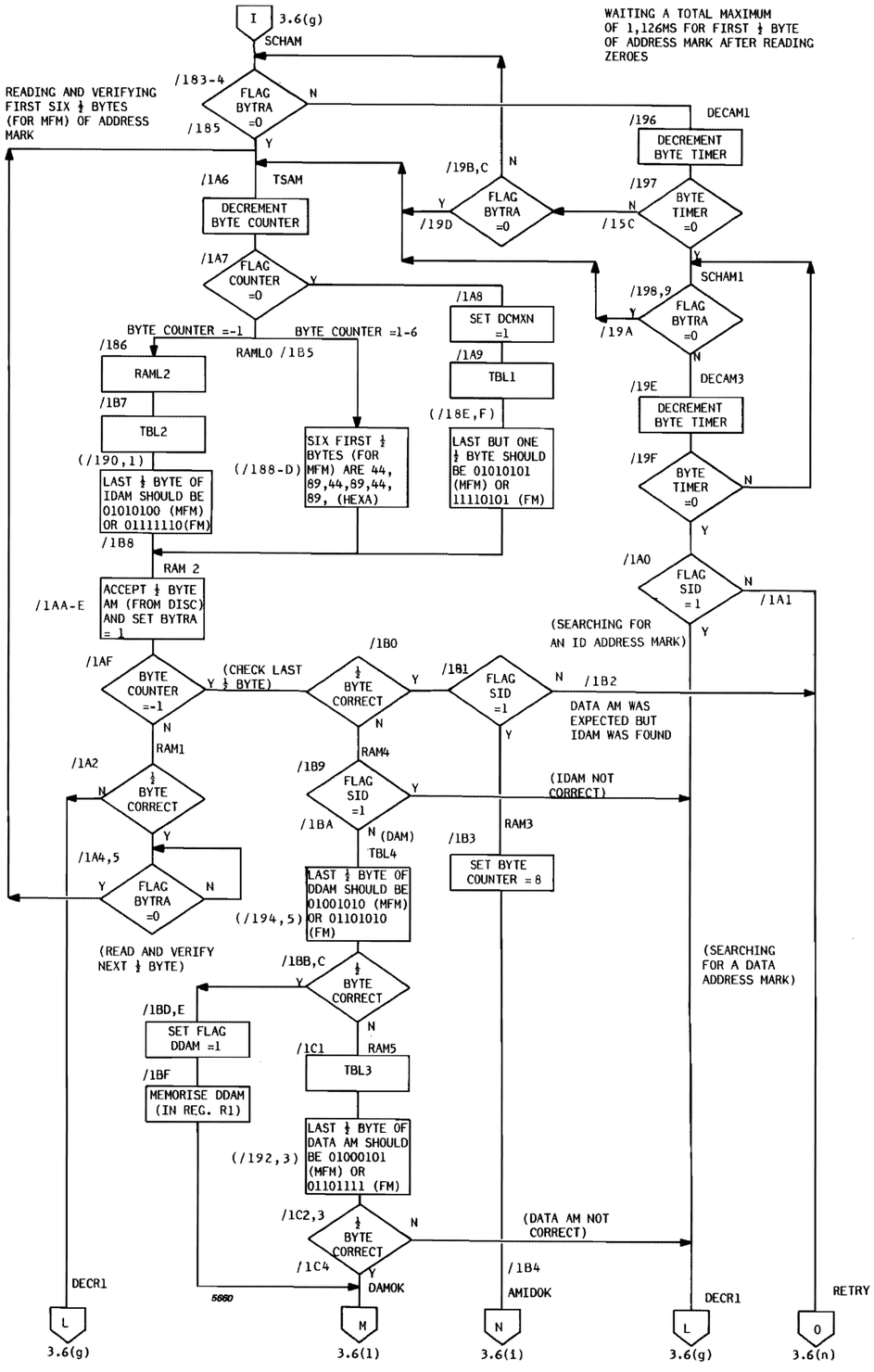

Figure 3.6h READING AND VERIFICATION OF ADDRESS MARK

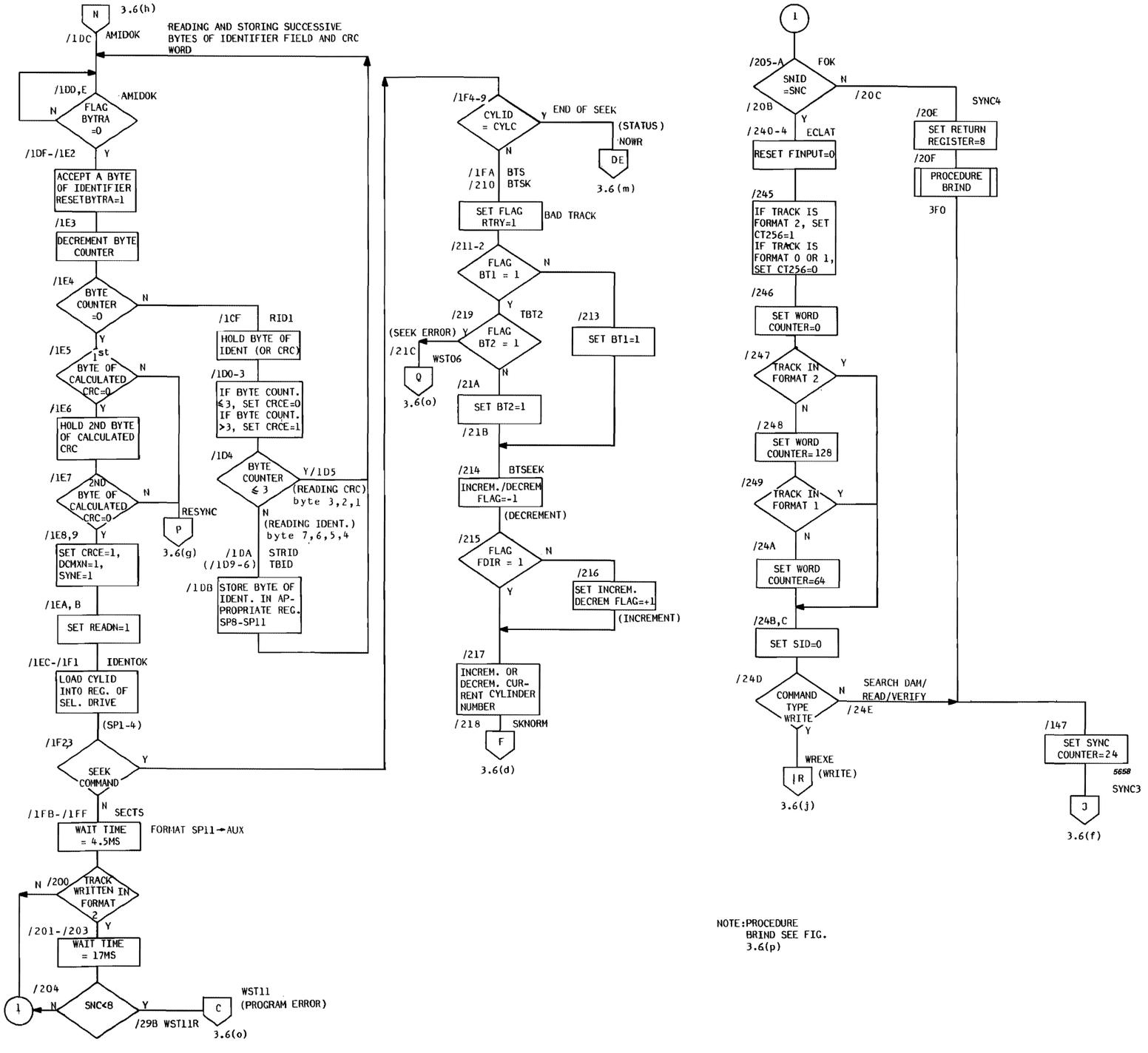

Figure 3.6i READ IDENTIFIER, BAD TRACK CORRECTION READ/WRITE PREPARATION

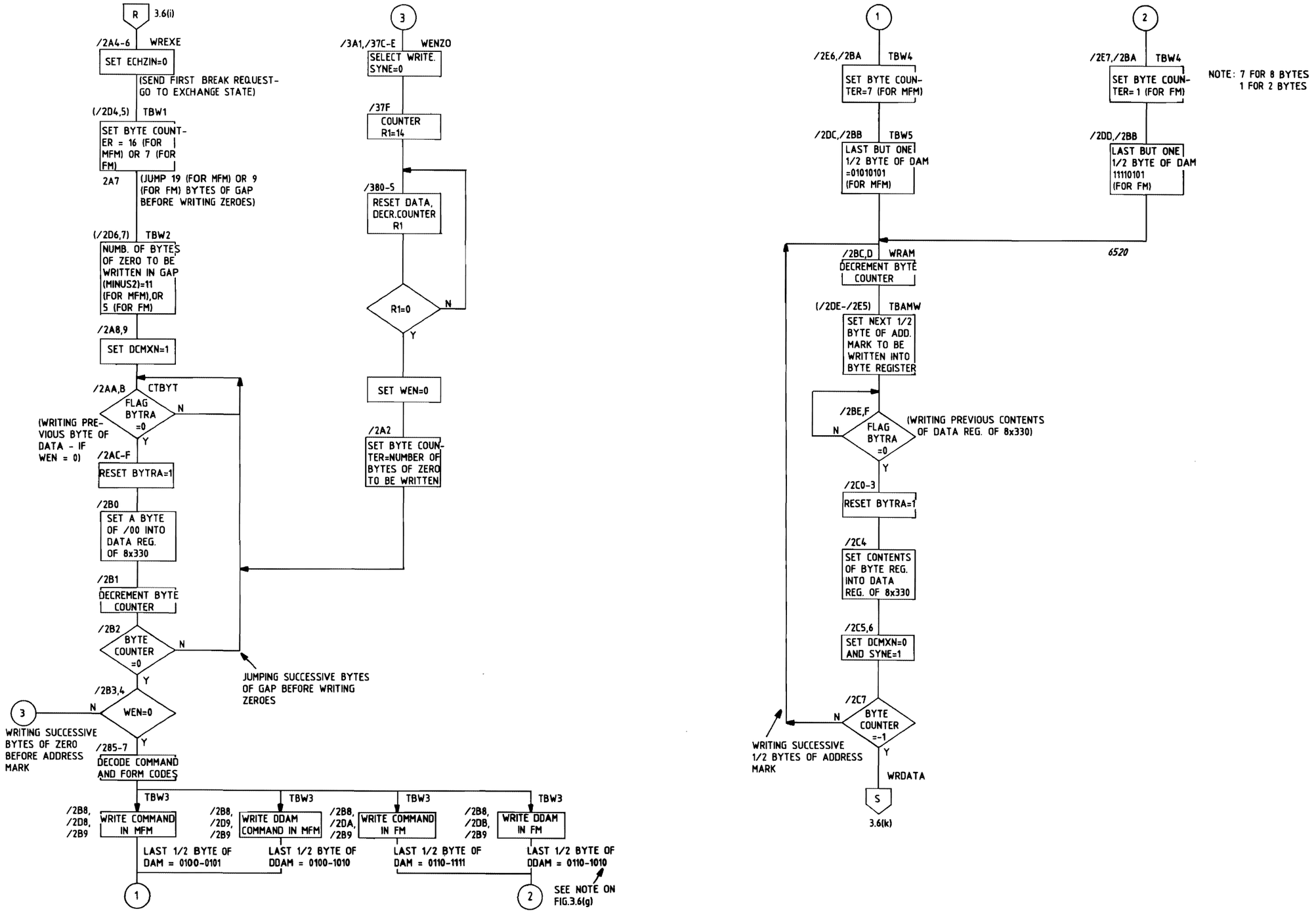

Figure 3.6j WRITING DATA ADDRESS MARK (NORMAL OR DELETED)

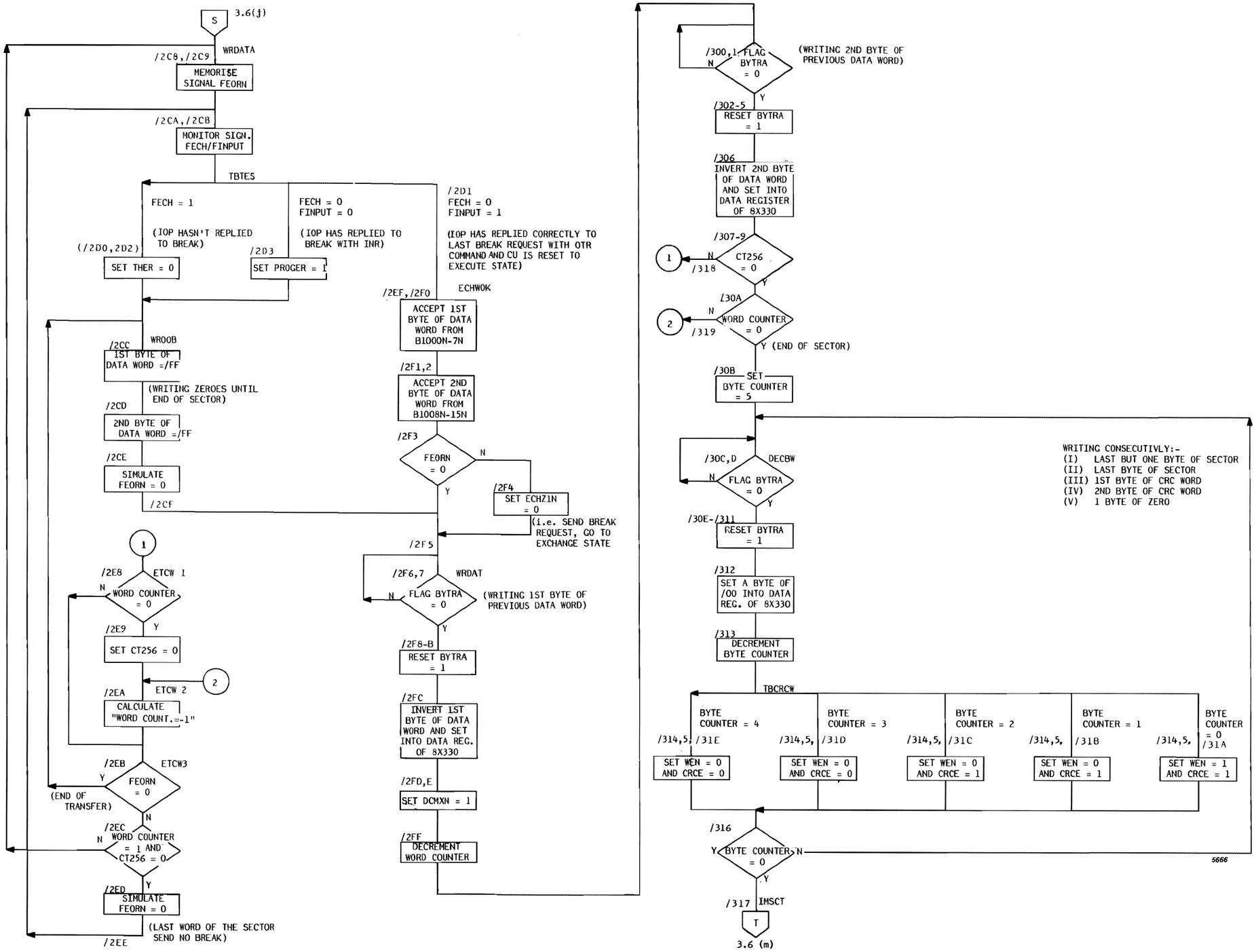

Figure 3.6k WRITING A SECTOR OF DATA

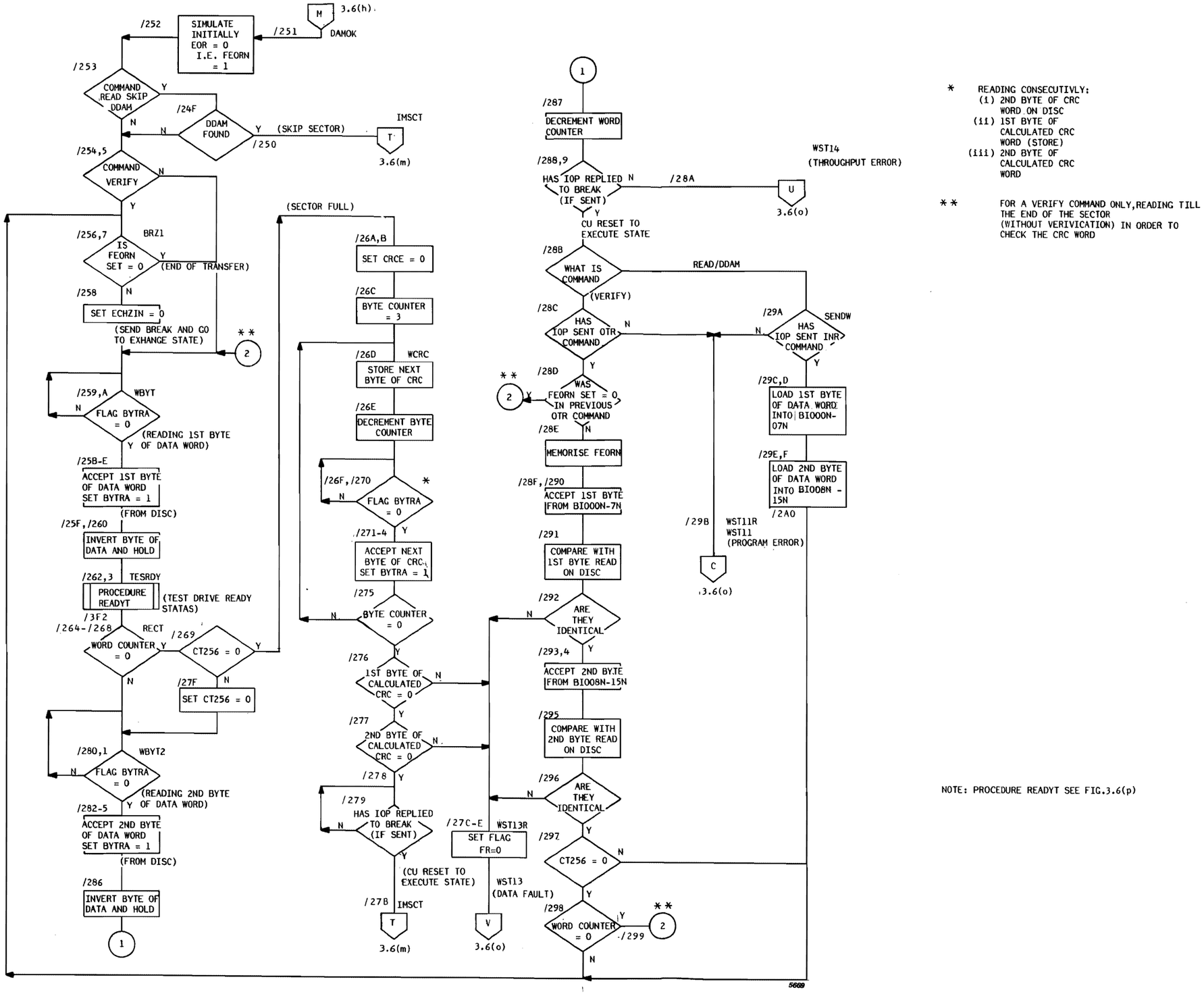

* READING CONSECUTIVLY:
(i) 2ND BYTE OF CRC WORD ON DISC
(ii) 1ST BYTE OF CALCULATED CRC WORD (STORE)
(iii) 2ND BYTE OF CALCULATED CRC WORD

** FOR A VERIFY COMMAND ONLY, READING TILL THE END OF THE SECTOR (WITHOUT VERIVICATION) IN ORDER TO CHECK THE CRC WORD

NOTE: PROCEDURE READYT SEE FIG.3.6(p)

Figure 3.61 READ/VERIFY ROUTINES

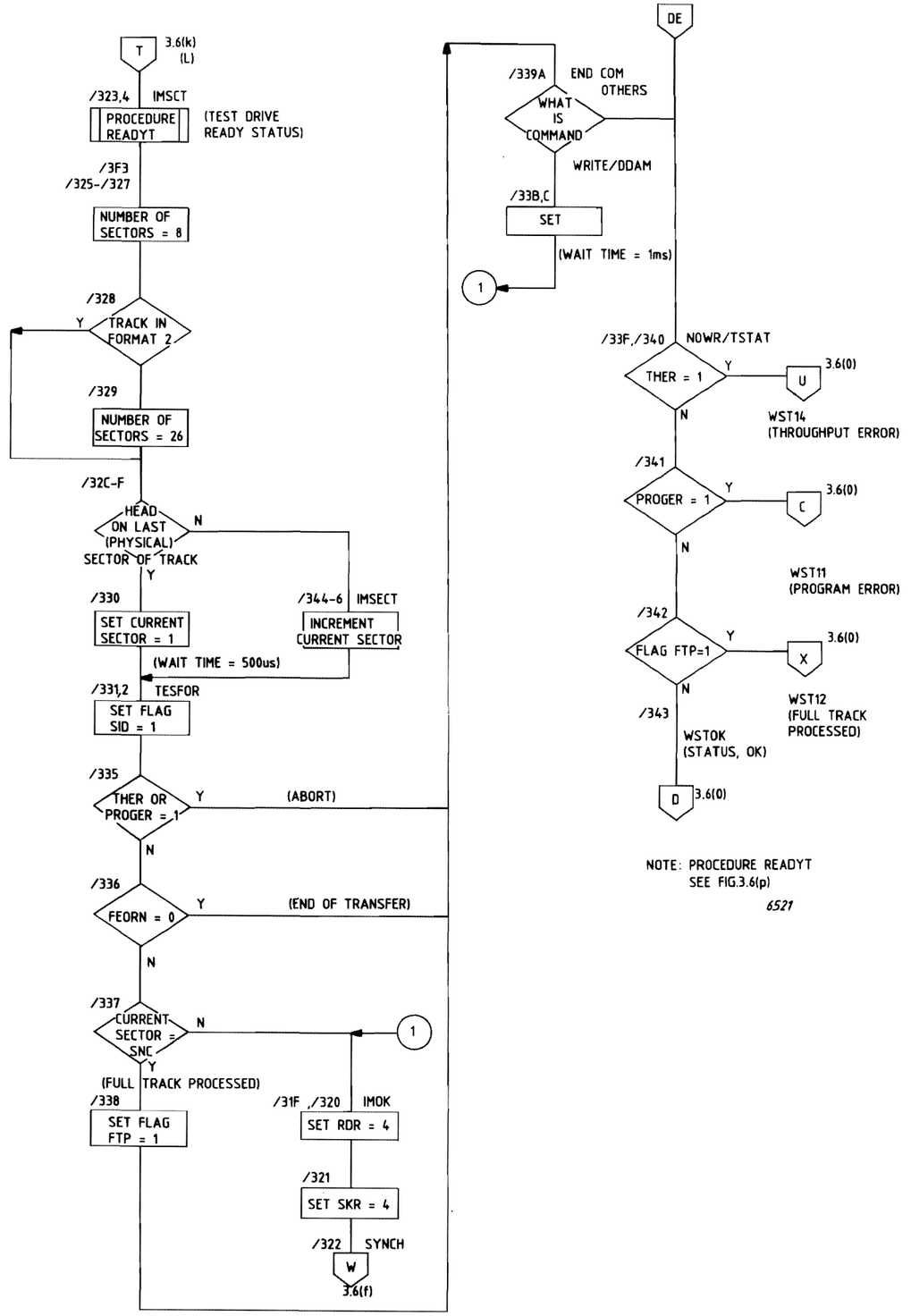

NOTE: PROCEDURE READYT SEE FIG.3.6(p)

6521

Figure 3.6m SECTOR CHAINING

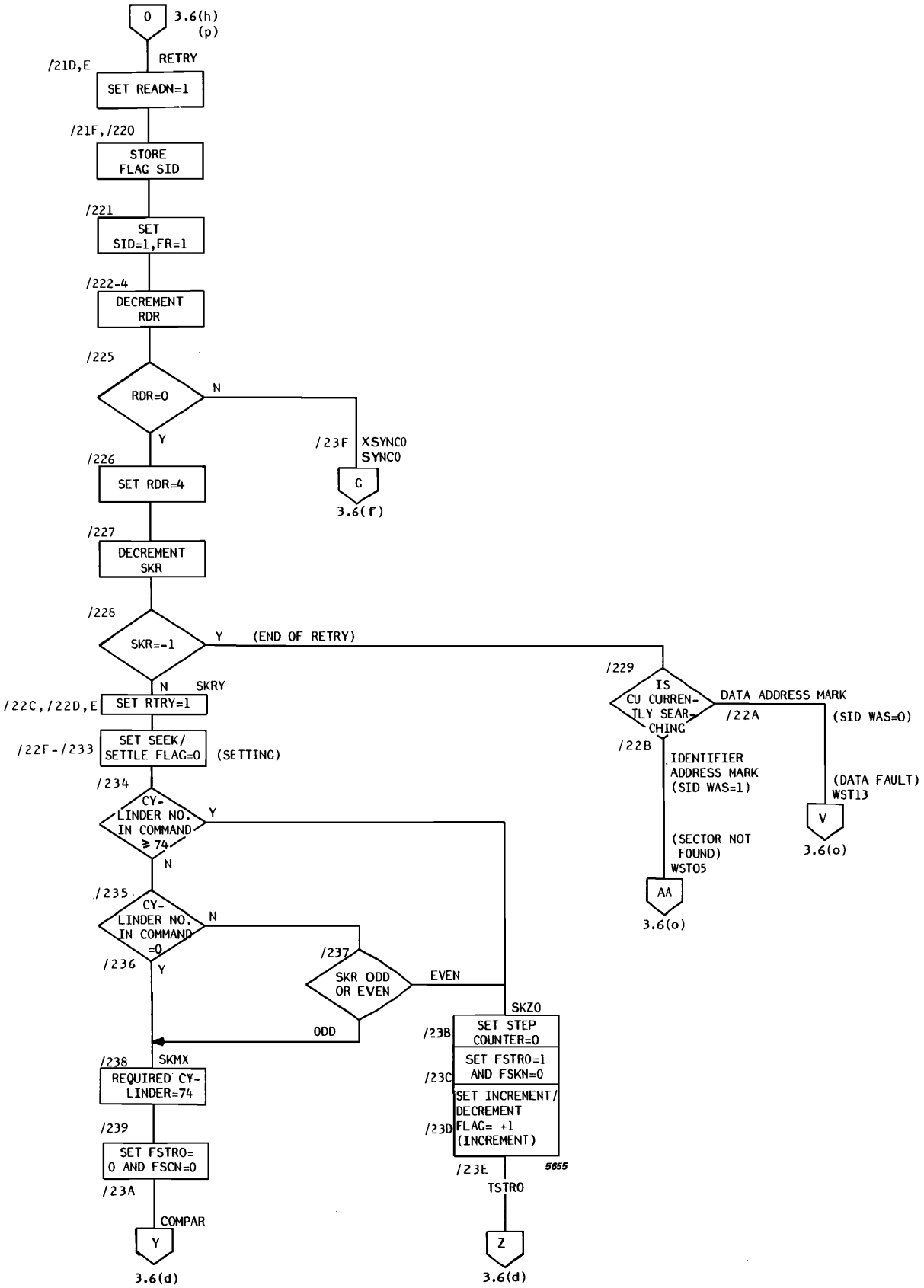

Figure 3.6n RETRY PROCEDURE

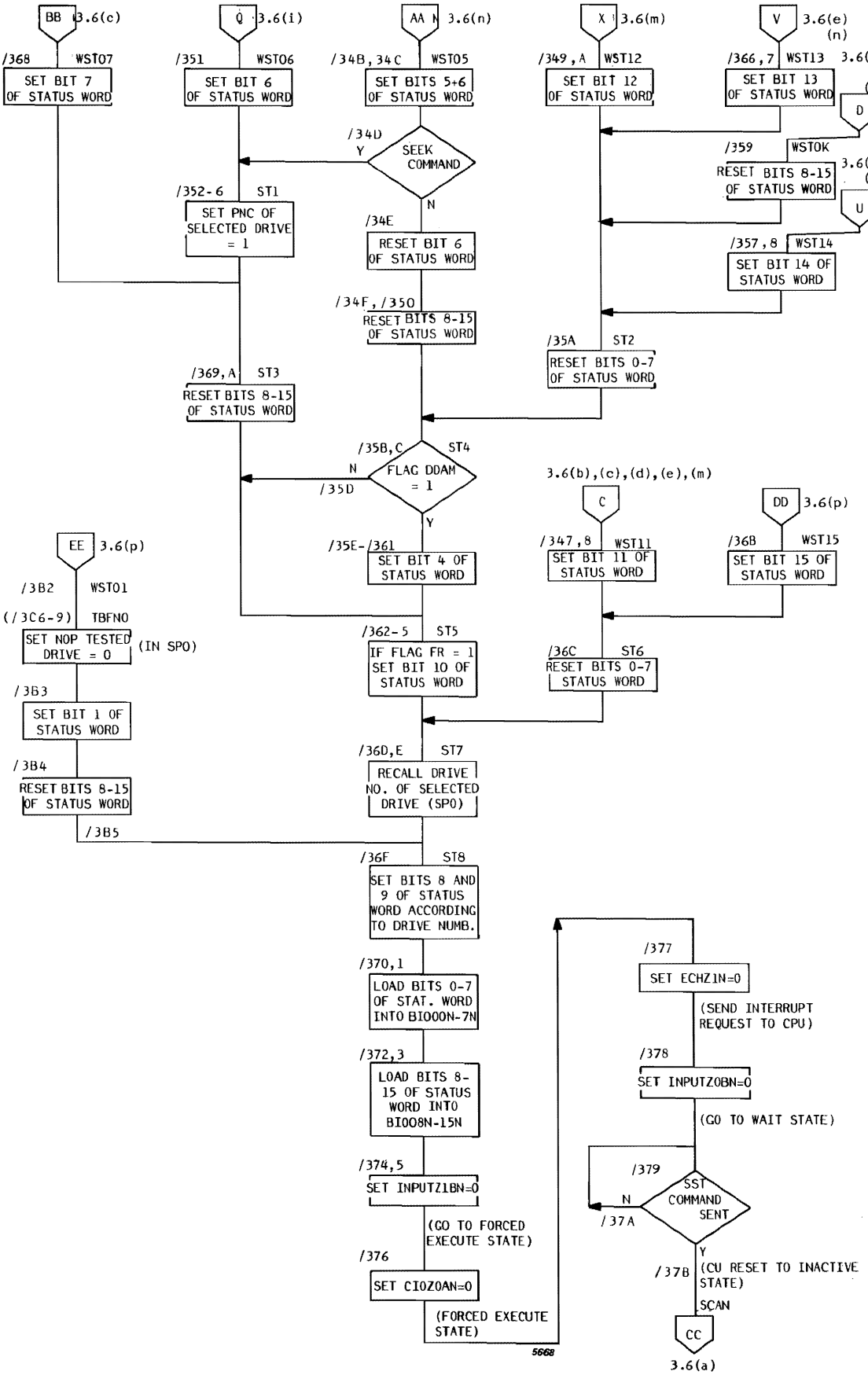

Figure 3.6o STATUS WORD GENERATION

Subroutines:

The return address is found in a return address table, where R11 is used as index.

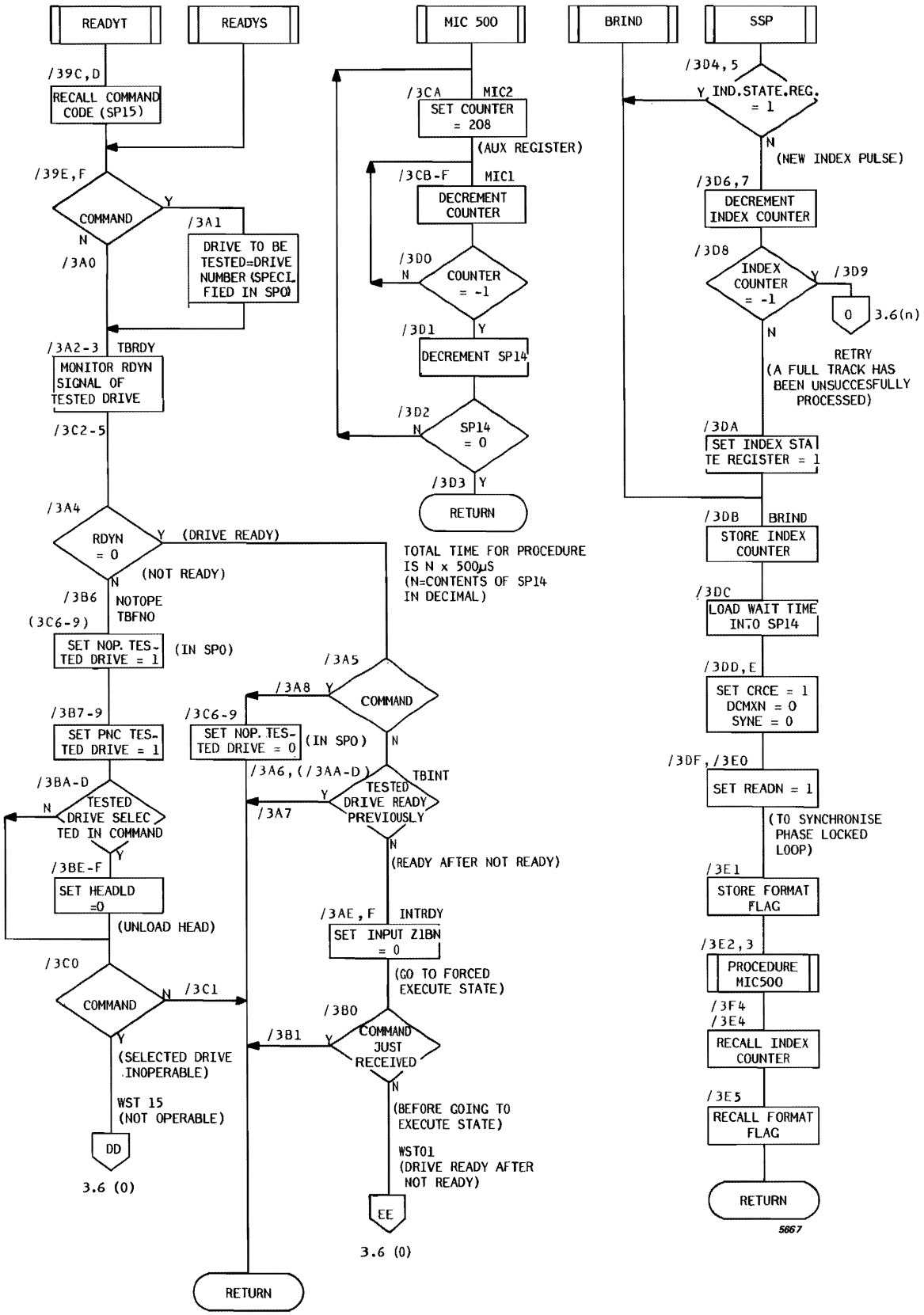

Figure 3.6p TEST DRIVE READY (READYT), TIMER (MIC500) AND FULL TRACK PROCESSED (SSP) PROCEDURES

4 DIAGRAMS

FIGURE	4.1	ADDRESS/COMMAND DECODE AND BREAK/INTERRUPT LOGIC	PAGE 4-3
	4.2	MICROPROCESSOR AND BUS TRANSCEIVERS	4-5
	4.3	DISC DRIVE CONTROL LOGIC	4-7

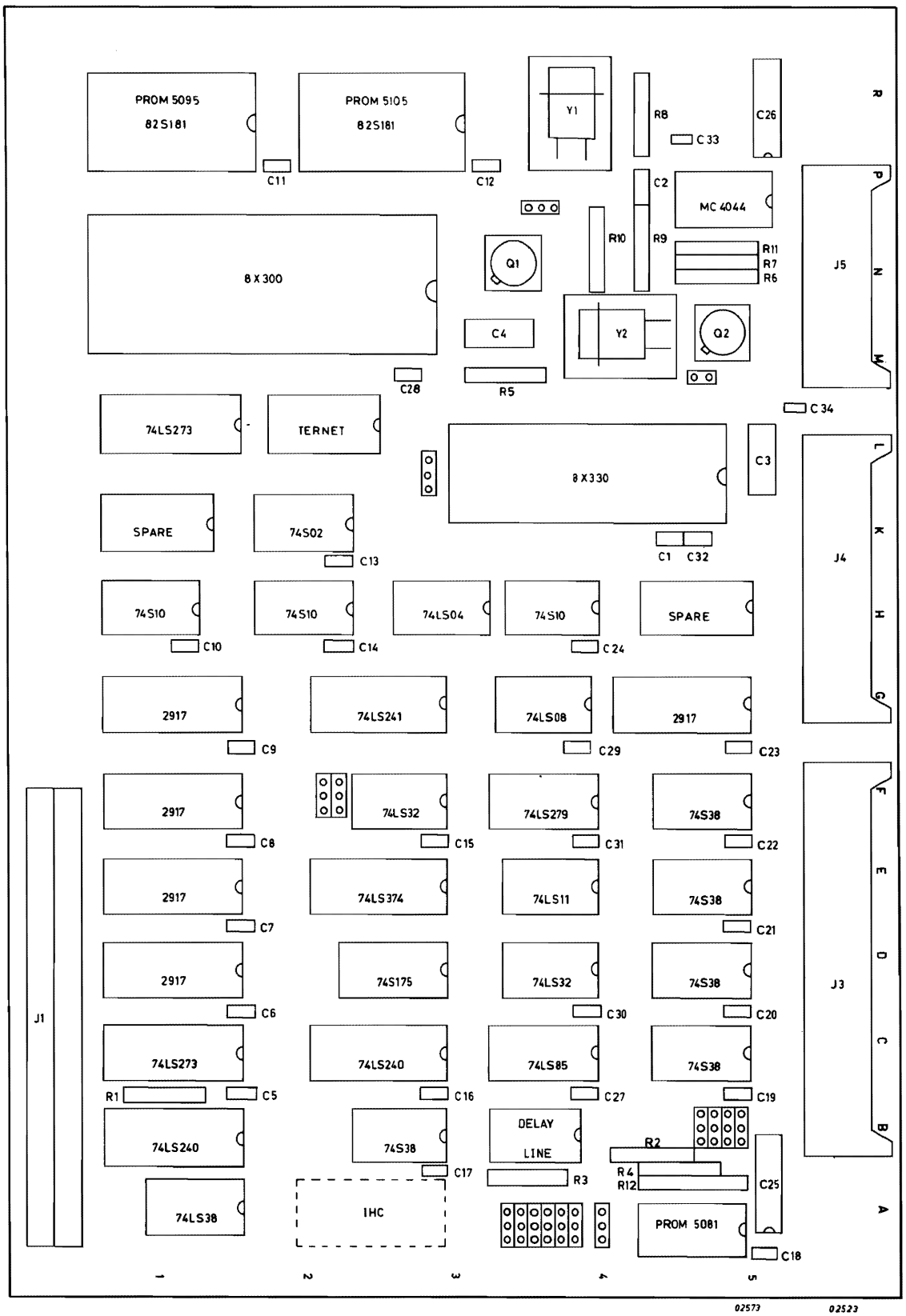
PROM 5095
82S181
PROM 5105
82S181
Y1
R8
C33
C26
C11
C12
C2
MC 4044
R10
R9
R11
R7
R6
J5
8 X 300
Q1
C4
Y2
Q2
C28
R5
C34
74LS273
TERNET
8 X 330
C3
SPARE
74S02
C13
C1
C32
J4
74S10
74S10
74LS04
74S10
SPARE
C10
C14
C24
2917
74LS241
74LS08
2917
C9
C29
C23
2917
74LS32
74LS279
74S38
C8
C15
C31
C22
2917
74LS374
74LS11
74S38
C7
C21
2917
74S175
74LS32
74S38
J3
C6
C30
C20
J1
74LS273
74LS240
74LS85
74S38
R1
C5
C16
C27
C19
74LS240
74S38
DELAY
LINE
R2
R4
R12
C25
C17
R3
74LS38
IHC
PROM 5081
C18
1
2
3
4
5
R
P
N
M
L
K
H
G
F
E
D
C
B
A
02573
02523

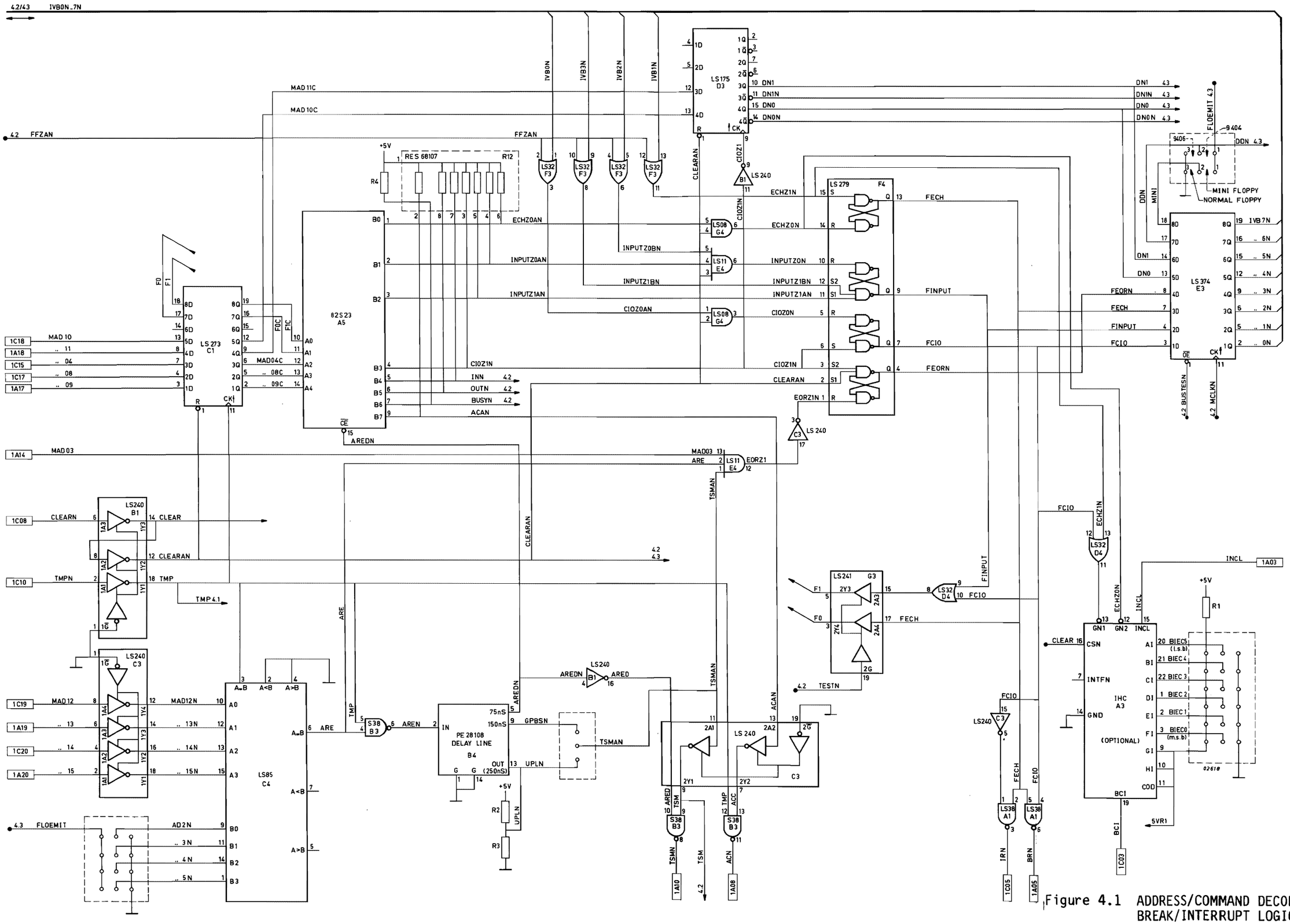

Figure 4.1 ADDRESS/COMMAND DECODE AND BREAK/INTERRUPT LOGIC

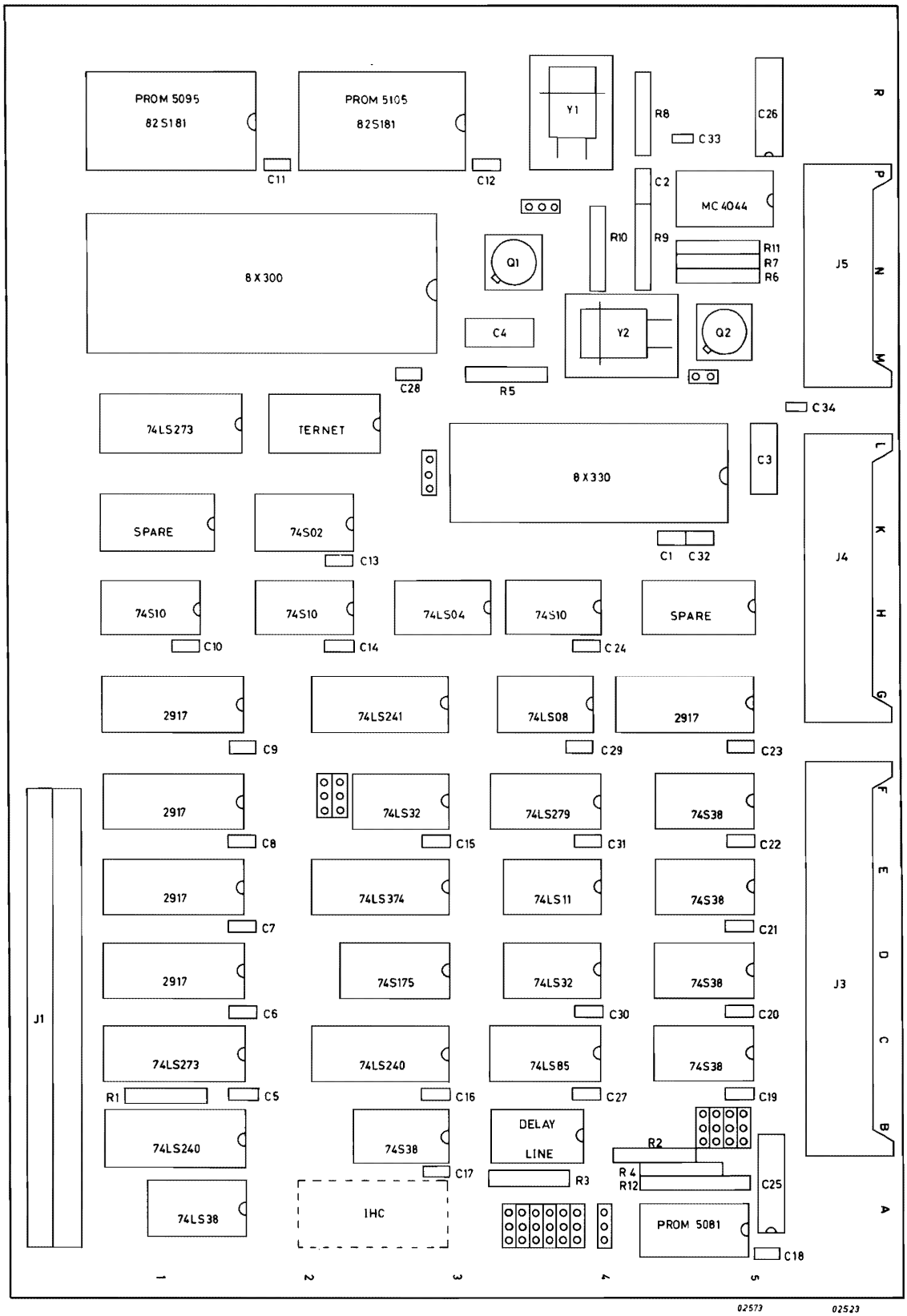
PROM 5095
82S181
PROM 5105
82S181
Y1
R8
C33
C26
C11
C12
C2
MC 4044
R10
R9
R11
R7
R6
J5
8 X 300
Q1
C4
Y2
Q2
C28
R5
C34
74LS273
TERNET
8 X 330
C3
SPARE
74S02
C13
C1
C32
J4
74S10
74S10
74LS04
74S10
SPARE
C10
C14
C24
2917
74LS241
74LS08
2917
C9
C29
C23
2917
74LS32
74LS279
74S38
C8
C15
C31
C22
2917
74LS374
74LS11
74S38
C7
C21
J1
2917
74S175
74LS32
74S38
J3
C6
C30
C20
74LS273
74LS240
74LS85
74S38
R1
C5
C16
C27
C19
74LS240
74S38
DELAY
LINE
R2
C17
R3
R4
R12
C25
74LS38
1HC
PROM 5081
C18
1
2
3
4
5
R
P
N
M
L
K
H
G
F
E
D
C
B
A
02573
02523

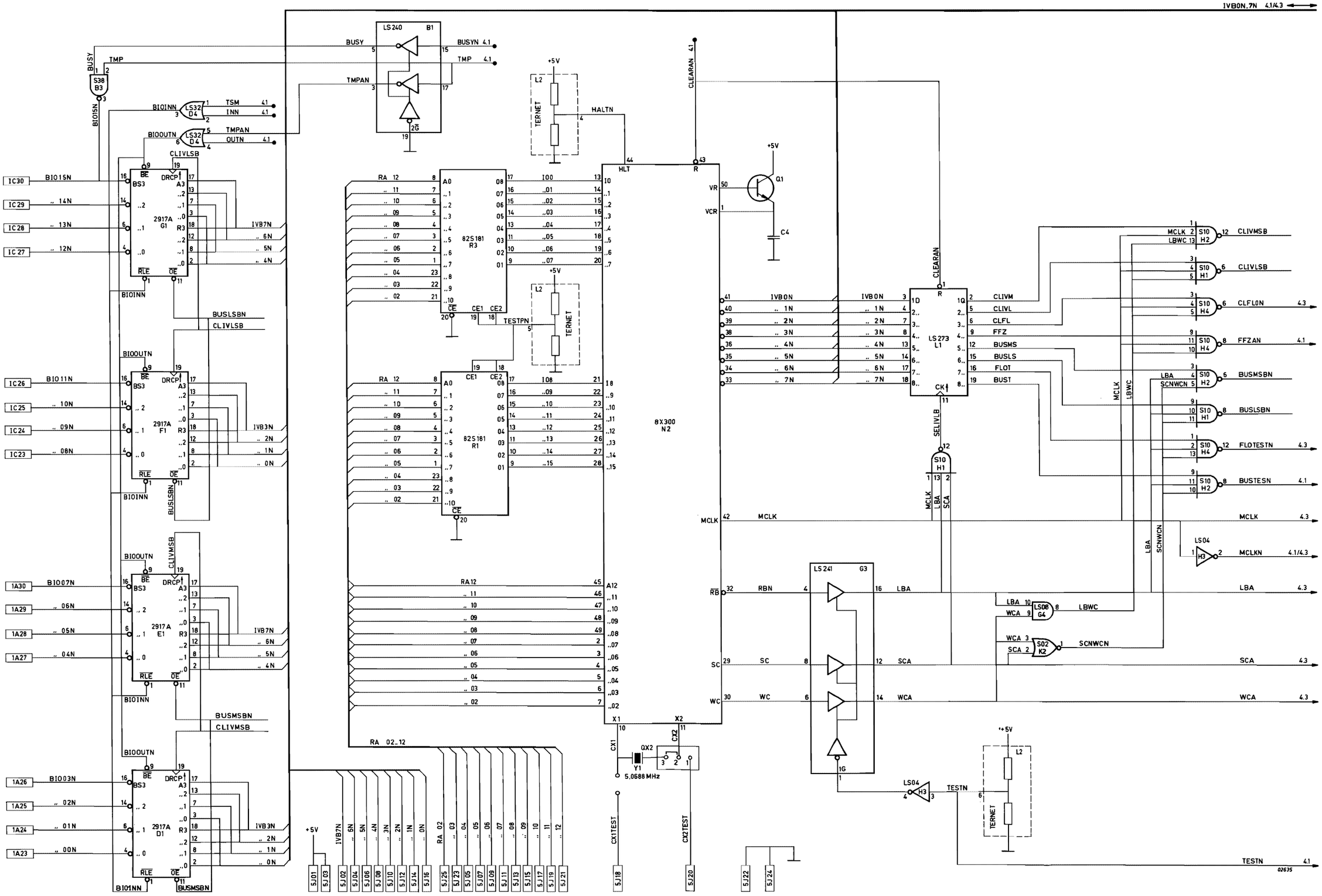

Figure 4.2
MICROPROCESSOR AND BUS TRANSCEIVERS

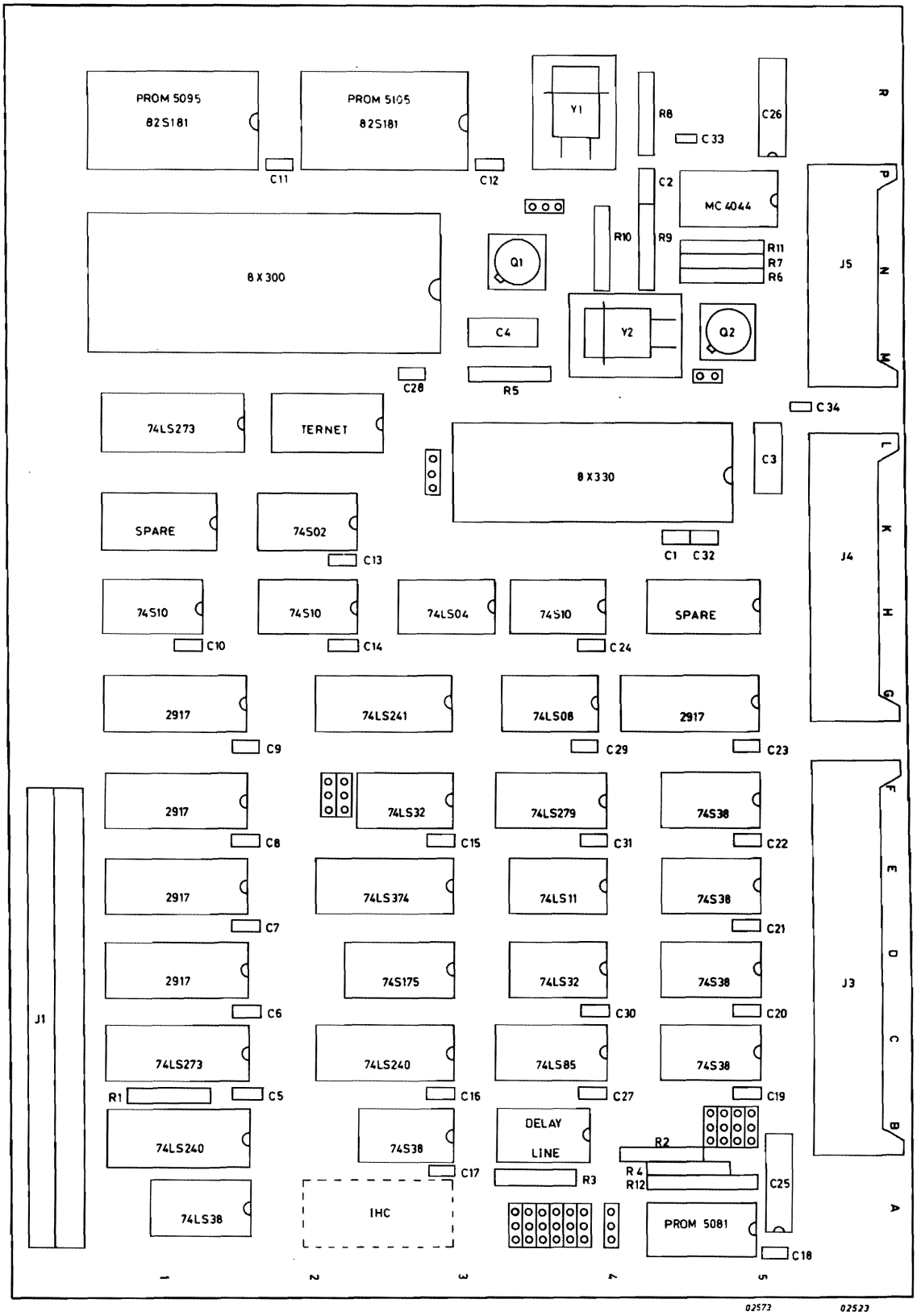
PROM 5095
82S181
PROM 5105
82S181
Y1
R8
C33
C26
C11
C12
C2
MC 4044
R10
R9
R11
R7
R6
J5
8 X 300
Q1
C4
Y2
Q2
C28
R5
C34
74LS273
TERNET
8 X 330
C3
SPARE
74S02
C13
C1
C32
J4
74S10
74S10
74LS04
74S10
SPARE
C10
C14
C24
2917
74LS241
74LS08
2917
C9
C29
C23
J1
2917
74LS32
74LS279
74S38
C8
C15
C31
C22
2917
74LS374
74LS11
74S38
C7
C21
2917
74S175
74LS32
74S38
C6
C30
C20
J3
74LS273
74LS240
74LS85
74S38
R1
C5
C16
C27
C19
74LS240
74S38
DELAY
LINE
R2
R4
R12
C25
C17
R3
74LS38
IHC
PROM 5081
C18
1
2
3
4
5
02573
02523

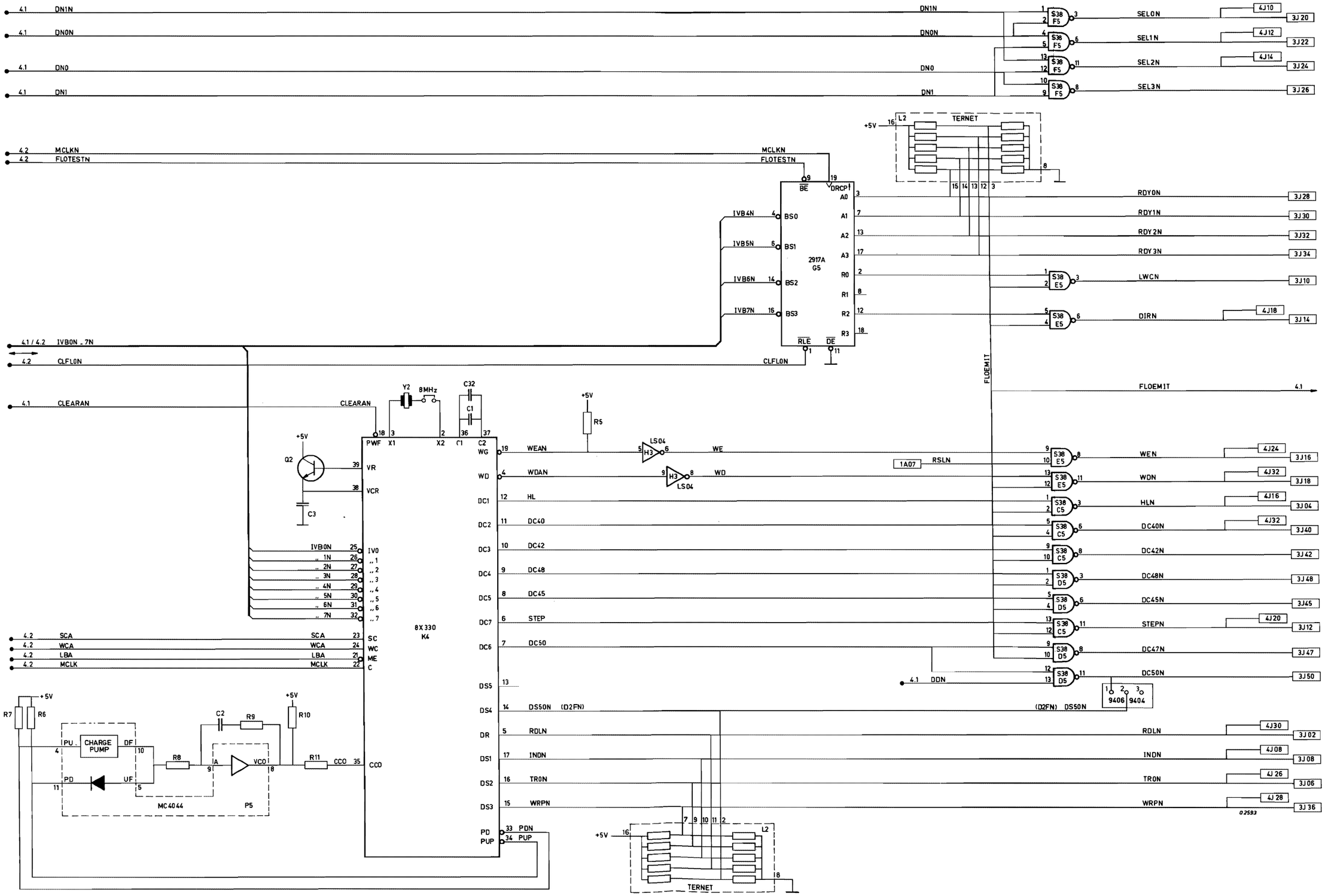

Figure 4.3 DISC DRIVE CONTROL LOGIC

6 PARTS LIST

SECTION	6.1	PARTS LIST P830-150	PAGE 6-3
	6.2	PARTS LIST PCB F1MZ	6-5
	6.3	CONVERSION LIST PCB F1MZ	6-8

6.1 PARTS LIST P830-150 *

Art. No.	Service 12-NC	Description
5111 199 67520	5322 216 25612	PCB F1MZ
5111 199 71030	5322 321 24983	Cable CU - 2 FD's
5111 199 71020	5322 321 24979	Cable CU - 4 FD's

* For new deliveries, F1MZ has been replaced by F1MZA which is fully compatible.

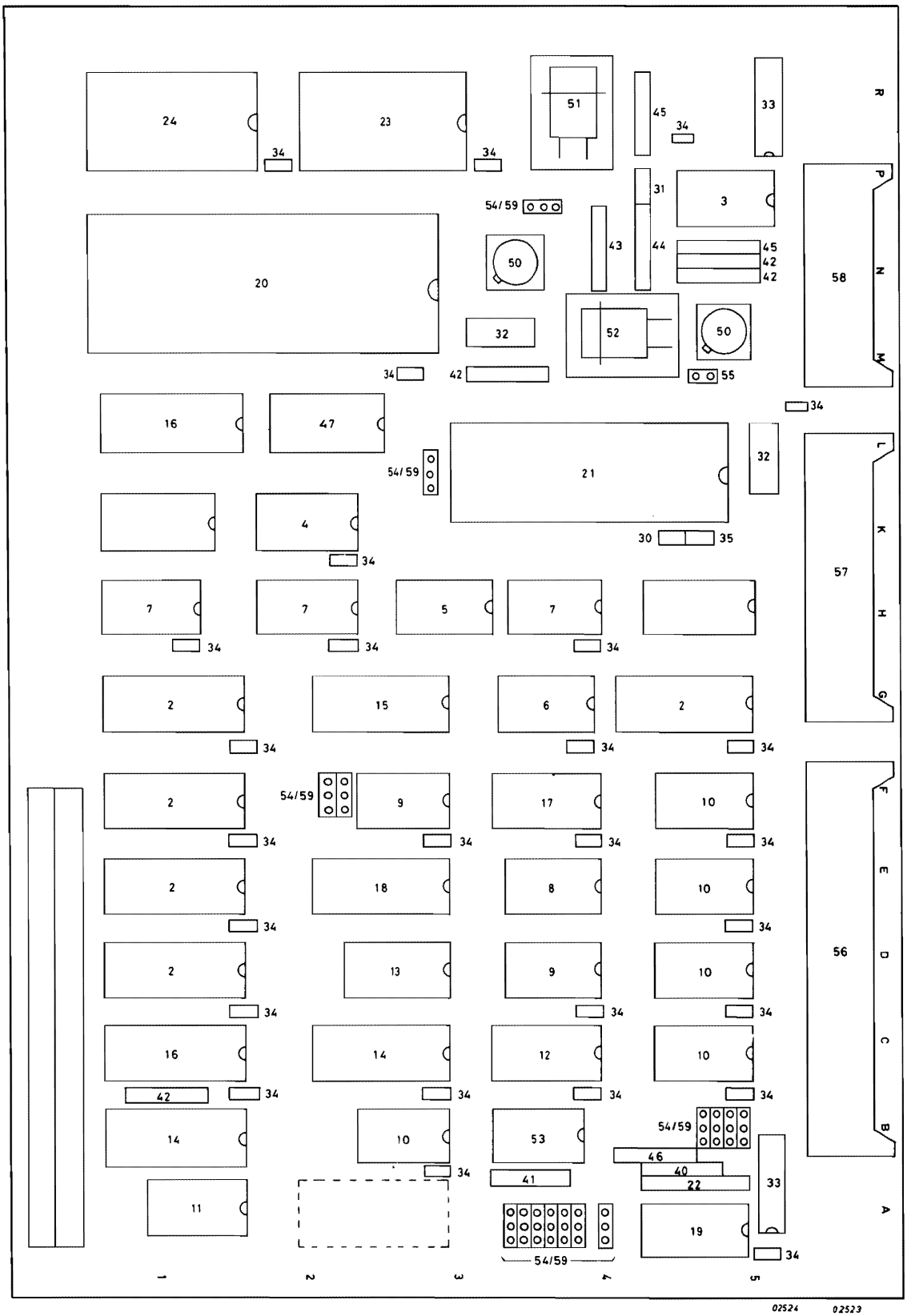

Figure 6.1 P.C.B. FOR F1MZ

6.2 PARTS LIST PCB F1MZ

Pos.	Code Number	Description
1	5111 199 67520	P.C.B. F1MZ
2	5111 000 04251	IC 2917A
3	5111 000 04161	IC 4044
4	5111 000 02241	IC 74S02
5	5111 000 02661	IC 74LS04
6	5111 000 02701	IC 74L08
7	5111 000 00921	IC 74S10
8	5111 000 02481	IC 74LS11
9	5111 000 02721	IC 74LS32
10	5111 000 04291	IC 74S38
11	5111 000 03691	IC 74LS38
12	5111 000 03591	IC 74LS85
13	5111 000 01821	IC 74S175
14	5111 000 04091	IC 74LS240
15	5111 000 04101	IC 74LS241
16	5111 000 03911	IC 74LS273
17	5111 000 03681	IC 74LS279
18	5111 000 03941	IC 74LS374
19	5111 010 05081	IC PROM5081 (82S23)
20	9333 843 90112	IC 8x300I
21	9335 503 90112	IC 8x330N
22	5111 000 03531	RNW 68107
23	5111 010 05105	PROM 5105
24	5111 010 05095	PROM 5095
30	2222 631 10339	Capacitor 33pF 2% CERPLAT
31	2222 630 18472	Capacitor 4,7nF 10% CERPLAT
32	2222 344 90101	Capacitor 0,1uF 10%
33	2222 030 38109	Capacitor 10uF 63V
34	2222 629 18103	Capacitor 10nF 10% CERPLAT
35	2222 631 10109	Capacitor 10pF 2%
	2222 631 10129	Capacitor 12pF 2%
	2222 631 10159	Capacitor 15pF 2%
	2222 631 10189	Capacitor 18pF 2%
	2222 631 10229	Capacitor 22pF 2%
	2222 631 10279	Capacitor 27pF 2%
	2411 011 01654	Soldertag E184/8
40	2322 211 13681	Resistor 680E, 1/4W 5%
41	2322 151 51871	Resistor 187E, 1/8W 1%
42	2322 211 13102	Resistor 1K 1/4W 5%
43	2322 211 13152	Resistor 1,5K 1/4W 5%
44	2322 211 13103	Resistor 10K 1/4W 5%
45	2322 211 13512	Resistor 5,1K 1/4W 5%
46	2322 151 52151	Capacitor 215E 1/8W 1%
47	5111 010 01701	Resistor 220/390OHM
50	9331 737 10112	Transistor BUY47

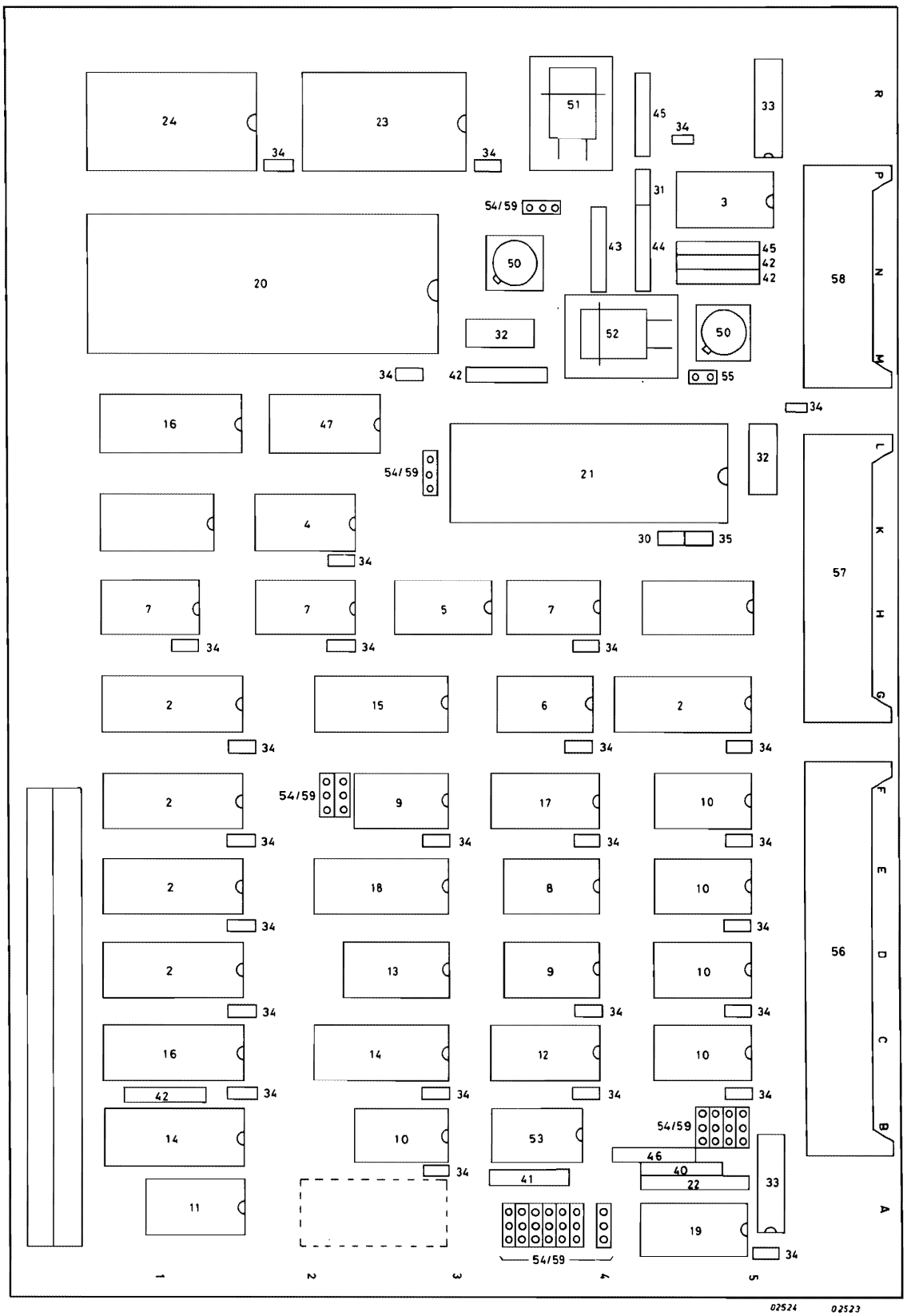

24
23
51
45
33
34
31
3
54/59
20
50
43
44
45
42
42
58
32
52
50
55
16
47
21
32
4
30
35
57
7
5
2
15
6
9
17
10
18
8
13
14
12
53
46
40
22
41
11
19
56
R
P
N
M
L
K
H
G
F
E
D
C
B
A
1
2
3
4
5
02524
02523

Pos.	Code Number	Description
51	2411 535 01332	Crystal QA60 5,0688 MHz
52	2411 535 01334	Crystal QA60 8MHz.
53	5111 000 05021	Delay Line LRP250
54	2411 024 01029	Jumper link 365-08
59	2411 010 15034	Pin 381 0358
55	2411 024 01024	Jumper link 2MM54
56	2422 025 01156	Connector 2x25 pin
57	2422 025 01502	Connector 2x17 pin
58	2422 025 02255	Connector 2x13 pin

6.3 CONVERSION LIST PCB F1MZ

ARTNR:	S-12NC:	SPEC:
2222 030 38109	4822 124 20728	ELKO 10MU +50-10% 63
2222 344 90101	5322 121 40323	CAP 0.1UF 100V 10%
2222 629 18103	4822 122 30043	CAP 10NF 63V
2222 630 18472	4822 122 30128	CAP 4700PF 100V 10%
2222 631 10109	4822 122 31054	CAP 10PF 63V 2%
2222 631 10129	4822 122 31056	CAP 12PF 63V 2%
2222 631 10159	4822 122 31058	CAP 15PF 63V 2%
2222 631 10189	4822 122 31061	CAP 18PF 63V 2%
2222 631 10229	4822 122 31063	CAP 22PF 63V 2%
2222 631 10279	4822 122 30045	CAP 27PF 63V 2%
2222 631 10339	4822 122 31067	CAP 33PF 63V 2%
2322 151 51871	5322 116 54494	RES 187E 1% 1/8W
2322 151 52151	5322 116 55274	RES 215E 1% 1/8W
2322 211 13102	4822 116 52391	RES 1K0 5% 0.25W
2322 211 13103	4822 110 73134	RES 10K 5% 0.25W
2322 211 13152	4822 110 73112	RES 1K5 5% 0.25W
2322 211 13392	4822 110 73123	RES 3K9 5% 0.25W
2322 211 13512	4822 110 70126	RES 5K1 5% 0.25W
2322 211 13681	4822 110 73103	RES 680E 5% 0.25W
2411 011 01654	5322 290 34064	SOLDERTAG E184/8
2411 011 07257	5322 268 14116	PIN QW786
2411 024 01024	5322 268 10182	JUMPER LINK 2MM54
2411 535 01332	5322 242 74147	CRYSTAL 5,0688MHZ
2411 535 01334	5322 242 74288	CRYSTAL 8MHZ
2422 025 01156	5322 265 64061	CONN 65268 011 2X25P
2422 025 01502	5322 265 64119	CONN 65268-010 2X17P
2422 025 02255	5322 267 64071	CONN 65268 009 2X13P
5111 000 00921	5322 209 84954	IC SN74S10N
5111 000 01821	5322 209 85451	IC N74S175B
5111 000 02241	5322 209 85407	IC N74S02A
5111 000 02481	5322 209 85604	IC N74LS11A
5111 000 02661	4822 209 80783	IC 74LS04
5111 000 02701	5322 209 84995	IC SN74LS08N
5111 000 02721	5322 209 85311	IC N74LS32A
5111 000 03531	5322 111 94187	RNW 68107(7X680E)
5111 000 03591	5322 209 85615	IC N74LS85N
5111 000 03681	5322 209 85346	IC SN74LS279N
5111 000 03691	5322 209 85605	IC N74LS38A
5111 000 03911	5322 209 85792	IC N74LS273N
5111 000 03941	5322 209 85869	IC SN74LS374N
5111 000 04091	5322 209 85862	IC SN74LS240N
5111 000 04101	5322 209 85873	IC SN74LS241N
5111 000 04161	5322 209 85821	IC MC4044L
5111 000 04251	5322 209 86193	IC 2917A
5111 000 04291	5322 209 85677	IC 74S38
5111 000 05021	5322 320 44052	DELAY LINE LRP250
5111 010 01701	5322 209 85083	RES 220/3900HM
5111 010 05081		PROM 5081
5111 010 05095		PROM 5095
5111 010 05105		PROM 5105
9331 737 10112	5322 130 44084	TRANS BUY47
9333 843 90112	5322 209 85995	IC 8X300I
9335 503 90112	5322 209 80902	IC 8X330

7 TROUBLE SHOOTING AND REPAIR

SECTION	7.1	TROUBLE SHOOTING SEQUENCE	PAGE 7-2
	7.2	SHORT ROUTINES	7-4
	7.2.1	Seek Test Program F1SEEK	7-4
	7.2.2	Program for Measuring Purposes F1LOOP	7-4
	7.2.3	Ready-Only Program READF1	7-5

LIST OF ILLUSTRATIONS

FIGURE	7.1	TROUBLE SHOOT SEQUENCE FLOWCHART	7-2

7.1 TROUBLE SHOOT SEQUENCE

The following flowchart may help you to find the fault in a system using F1M-CU and floppy drive(s).

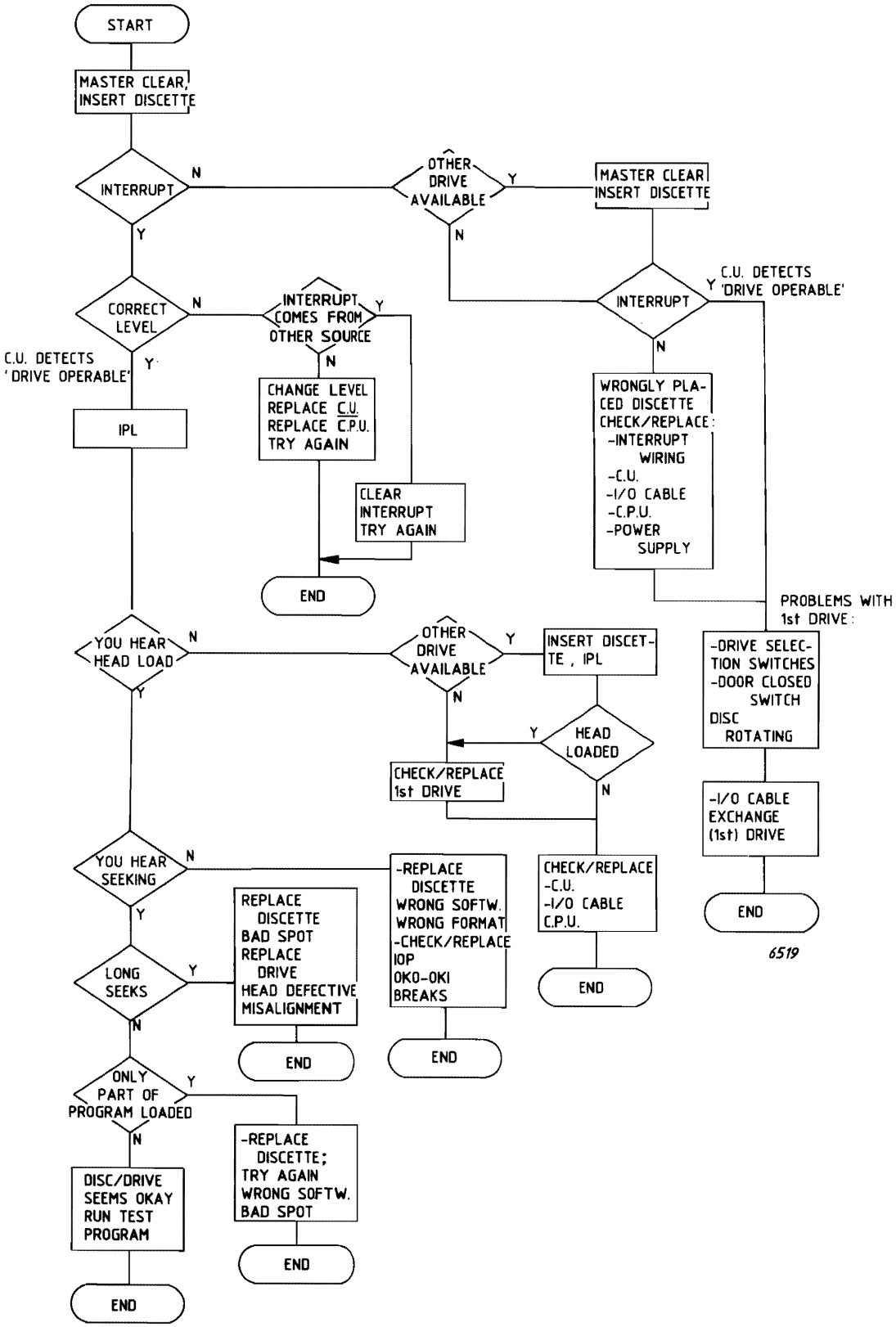

Figure 7.1 TROUBLE SHOOT SEQUENCE FLOWCHART

Notes: By forcing interface signals, one defective drive can block the others. In this case, connect the I/O-cable only to one drive at the time during test.

'DATA FAULT' can mean: (CU status bit 13)
- bad spot on discette
- dirty read head
- misalignment of drive

'SECTOR NOT FOUND' can mean: (CU status bit 5)
- preformatted info on discette is destroyed (identifier is not recognized)

'SEEK ERROR' can mean: (CU status bit 6)
- defective or dirty head
- misalignment
- preformatted info on discette is destroyed (no identifier recognized of the whole track)

7.2 SHORT ROUTINES

7.2.1 SEEK TEST PROGRAM F1SEEK

```
00000                          IDENT    F1SEEK
00001                  * SEEK TEST FOR F1M-Z (FLOPPY CU 1MB)
00002                  * SEEKS BETWEEN CYL 00 AND 32
00003                  * DRIVE 0 ONLY. STATUS IN A5
00004                  * IF SEEKING, YOU HEAR THE REGULAR MOVEMENT
00005                  *
00006                  * REG A4 IS PRESET BIT 0 1 2 3 4 5 6 7 8 9 10 11 12 13 14 15
00007                  *              /0003    0 0 0 0 0 0 0 0 0 0  0  0  0  0  1  1
00008                  *                                             ----------------
00009                  *                                             SEEK CYLINDER NUMBER
00010          0003    DA       EQU      3
00011  0000              RES      /40
00012  0080  FFFF  DATA  DATA     /FFFF
00013  0082  0000        DATA     0
00014  0084  0403  START LDK      A4,3
00015  0086  207F        HLT
00016  0088  208F        INH
00017  008A  44C3  RET   CIO      A4,1,DA              SEEK
00018  008C  5C04        RB(4)    *-2
00019  008E  4DC3        SST      A5,DA                STATUS
00020  0090  5C04        RB(4)    *-2
00021  0092  8514        LDR      A5,A5                SET CR ACCORDING STATUS
00022  0094  5104        RF(1)    ST
00023  0096  3480        XRK      A4,/80               CHANGE CYL 00 - 32, ETC
00024  0098  5F10        RB       RET
00025  009A  207F  ST    HLT
00026                    END      START
```

7.2.2 PROGRAM FOR MEASURING PURPOSES F1LOOP

```
00000                          IDENT    F1LOOP
00001                  *
00002                  * PROGRAM TO WRITE AND READ A SECTOR CONTINUOUSLY (CU 1M )
00003                  * WRITE BUFFER /200 UP UNTIL /27E
00004                  * READ BUFFER /300 UP UNTIL /37E
00005                  * DRIVE 0 ONLY.  REG A5 CONTAINS STATUS
00006                  *
00007                  *    PRESET A1: BIT 0 1 2 3 4 5 6 7 8 9 10 11 12 13 14 15
00008                  *             /0001  0 0 0 0 0 0 0 0 0  0  0  0  0  0  1
00009                  *              =CIO    -                I----------I     -
00010                  *                    HEAD               SECTORNO.        WRITE
00011                  *
00012                  *           A2: BIT 0 1 2 3 4 5 6 7 8 9 10 11 12 13 14 15
00013                  *            /C040  1 1 0 0 0 0 0 0 0 1  0  0  0  0  0  0
00014                  *             =WER1   -              I--------------------I
00015                  *                   WRITE                BLOCK LENGTH
00016                  *
00017                  *           A3: BIT 0 1 2 3 4 5 6 7 8 9 10 11 12 13 14 15
00018                  *            /0200  0 0 0 0 0 0 1 0 0 0  0  0  0  0  0  0
00019                  *             =WER2 I-----------------------------------I
00020                  *                                BUFFER  ADDRESS
00021                  *
00022                  *           A4: BIT 0 1 2 3 4 5 6 7 8 9 10 11 12 13 14 15
00023                  *            /0003  0 0 0 0 0 0 0 0 0 0  0  0  0  1  1
00024                  *            =SEEK                I-----------------I
00025                  *                                   CYL NUMBER
00026                  *
00027                  * CHECK CORRECT RUNNING:STOP PROGRAM , COMPARE IF /200 AND ON
00028                  * EQUALS /300 AND ON.
00029                  *    NOTE: DISCETTE FORMAT 0,SS,SD  26 SECTORS,64 WORDS/SECTOR
00030                  * ERROR: STATUS STOP AT /BC (/00BE AT HHP):A5 CONTAINS STATUS WORD
00031                  *
00032          0003    DA       EQU      3
00033  0000              RES      /40
00034  0080  FFFF  DATA  DATA     /FFFF
00035  0082  0000        DATA     0
00036  0084  0101  START LDK      A1,1                 PRESET REG
00037  0086  8220        LDKL     A2,/C040
       0088  C040
00038  008A  8320        LDKL     A3,/200
       008C  0200
00039  008E  0403        LDK      A4,3
00040  0090  207F        HLT
00041  0092  208F        INH
00042  0094  44C3        CIO      A4,1,DA              SEEK
00043  0096  5C04        RB(4)    *-2
00044  0098  4DC3        SST      A5,DA                STATUS
00045  009A  5C04        RB(4)    *-2
00046  009C  8514        LDR      A5,A5
00047  009E  511C        RF(1)    ST                   STATUS FAULT
00048  00A0  7206  RET   WER      A2,DA+DA
00049  00A2  7307        WER      A3,DA+DA+1
00050  00A4  41C3        CIO      A1,1,DA              PREPARE WRITE (OR READ)
00051  00A6  5C04        RB(4)    *-2
00052  00A8  4DC3        SST      A5,DA                STATUS
00053  00AA  5C04        RB(4)    *-2
00054  00AC  8514        LDR      A5,A5
00055  00AE  510C        RF(1)    ST                   STATUS FAULT
00056  00B0  3101        XRK      A1,1
00057  00B2  8220        XRKL     A2,/4000             CHANGE WRITE TO READ,VICE VERSA
       00B4  4000
00058  00B6  8320        XRKL     A3,/0100
       00B8  0100
00059  00BA  5F1C        RB       RET
00060  00BC  207F  ST    HLT
00061                    END      START
```

7.2.3 READ-ONLY PROGRAM READF1

This program can be used in case program load fails.
The program READF1 checks on read errors and can be used to distinguish read errors and software problems.

```
                                IDENT    READF1
                        *
                        *  READ CHECK ON IDENTIFIERS AND DATA
                        *   0.25 DISCETTES AND 1M (26 SECTORS)
                        *
                        *  STATUS BITS:
                        *                5  SECTOR NOT FOUND
                        *                6  SEEK ERROR
                        *               10  RETRY
                        *               13  DATA ERROR
                        *               14  THROUGHPUT ERROR
                        *               15  NOT OPERABLE
                        *                4   CONTINUE (DDAM FOUND)
                        *
          0003          DA       EQU      3
0000                            RES      /40
0080  FFFF                      DATA     /FFFF,0
0082  0000
0084  207F              START    HLT
0086  20BF                      INH
0088  87A0                      LDKL     A15,/180              STACK
008A  0180
008C  4DC3                      SST      A5,DA
008E  0100                      LDK      A1,0                  SELECT HEAD 0
                        *********SEEK**********
0090  0403              HEAD     LDK      A4,3                  CYL 0
0092  44C3              NXTCY    CIO      A4,1,DA               SEEK
0094  F7A1                      CF       A15,STATUS
0096  00BA  R
                        **********READ**********
0098  8220                      LDKL     A2,/8D00
009A  8D00
009C  7206                      WER      A2,DA+DA
009E  8320                      LDKL     A3,/200               DATA BUF ADDR
00A0  0200
00A2  7307                      WER      A3,DA+DA+1
00A4  41C3                      CIO      A1,1,DA               READ FROM DRIVE 0
00A6  F7A1                      CF       A15,STATUS
00A8  00BA  R
00AA  1404              ON       ADK      A4,4                  NEXT CYL
00AC  EC20                      CWK      A4,/133               CYL 76?
00AE  0133
00B0  5A20                      RB(2)    NXTCY
00B2  9120                      ADKL     A1,/4000              HEAD 1
00B4  4000
00B6  5928                      RB(1)    HEAD
00B8  5F36                      RB       START
                        *
00BA  4DC3              STATUS   SST      A5,DA
00BC  5C04                      RB(4)    *-2
00BE  A520                      ANKL     A5,/0E27
00C0  0E27
00C2  5002                      RF(0)    RTN
00C4  207F                      HLT
00C6  F03E              RTN      RTN      A15
                                END      START
```

8 EQUIPMENT SHELF P830-010

SECTION	8.1	DISC LOADING/HANDLING	PAGE 8-2
	8.2	POWER SUPPLY	8-2
	8.3	PARTS LIST	8-8
	8.3.1	Power Supply	8-8
	8.3.2	PCB REG FL	8-10
	8.4	CONVERSION LIST REG. FLOPPY PCB	8-12

LIST OF ILLUSTRATIONS

FIGURE	8.1	FLOPPY DRIVE CHASSIS (FRONT VIEW)	8-3
	8.2	FLOPPY DRIVE CHASSIS (REAR VIEW)	8-4
	8.3	POWER SUPPLY SCHEMATIC	8-5
	8.4	POWER SUPPLY REGULATOR CARD	8-7

Note: For P800-serie computers, flexible disc drives are mounted in P830-010 equipment shelves.
For all other systems, see the applicable service manuals.

8 EQUIPMENT SHELF P830-010

The Floppy Disc Unit drive chassis (figure 8.1) provides space for up to two drive units and contains the power supply and all related cabling for the drives. Each drive unit is held in place by four machine screws; two on top and two on the bottom of each unit. The drive unit can be removed from the rear of the chassis after removing these screws.

8.1 DISC LOADING/HANDLING

A floppy disc (discette) can be loaded into the drive when the drive power is on and the door is unlocked (lamp on). The disc should be removed from its envelope as shown on figure 8.1 and inserted into the drive unit until the jacket is solidly against the stops. Close the drive unit door after inserting or removing a disc.

8.2 POWER SUPPLY

A power supply is located in the drive chassis to provide +24 and +5 regulated DC volts for up to two drive units. The main power supply components are shown in figure 8.2. The power supply regulator circuitry is located on a printed circuit card at the inside rear of the chassis; this card contains fuses for the regulator inputs and trimpots for adjusting the two positive voltages (+24 and +5). The regulator card components are shown on figure 8.4. The power supply schematic, including the regulator circuit, is shown on figure 8.3. The power supply components are listed in table 8.1.

AC POWER INPUT

The main AC power enters the chassis at the lower rear corner (figure 8.2). A single line is fused through F1, located beside the power-cable entry. The chassis may be wired for 240, 220 or 115 volts AC by varying the input connections to the mains transformer. The transformer wiring differences are shown on the power supply schematic, figure 8.3.

DRIVE UNIT CODING/TERMINATOR

Address and lock/unlock coding switches are located on the printed circuit card of each drive unit. These controls are on a single row of printed-circuit switches which are accessible without removing the drive unit from the chassis. Next to the coding switches, there is a 16-pin DIP socket for the terminator which must be inserted for the last drive unit in the chain.

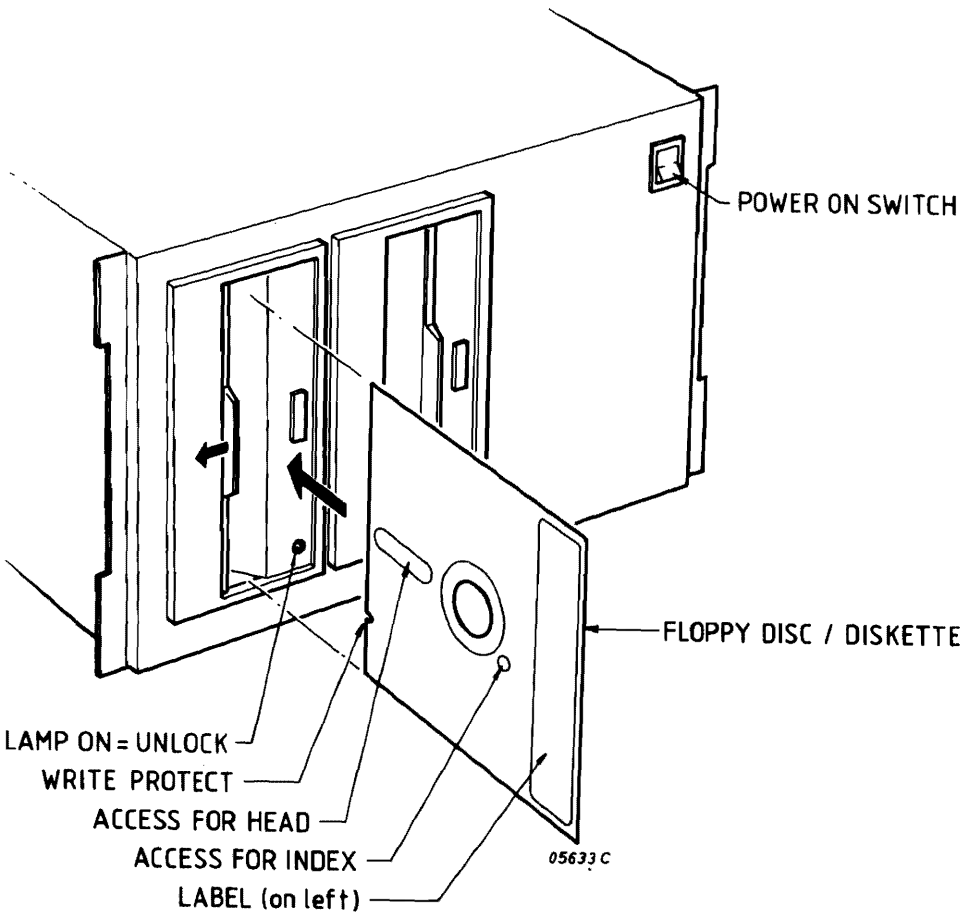

Figure 8.1 FLOPPY DRIVE CHASSIS, FRONT VIEW

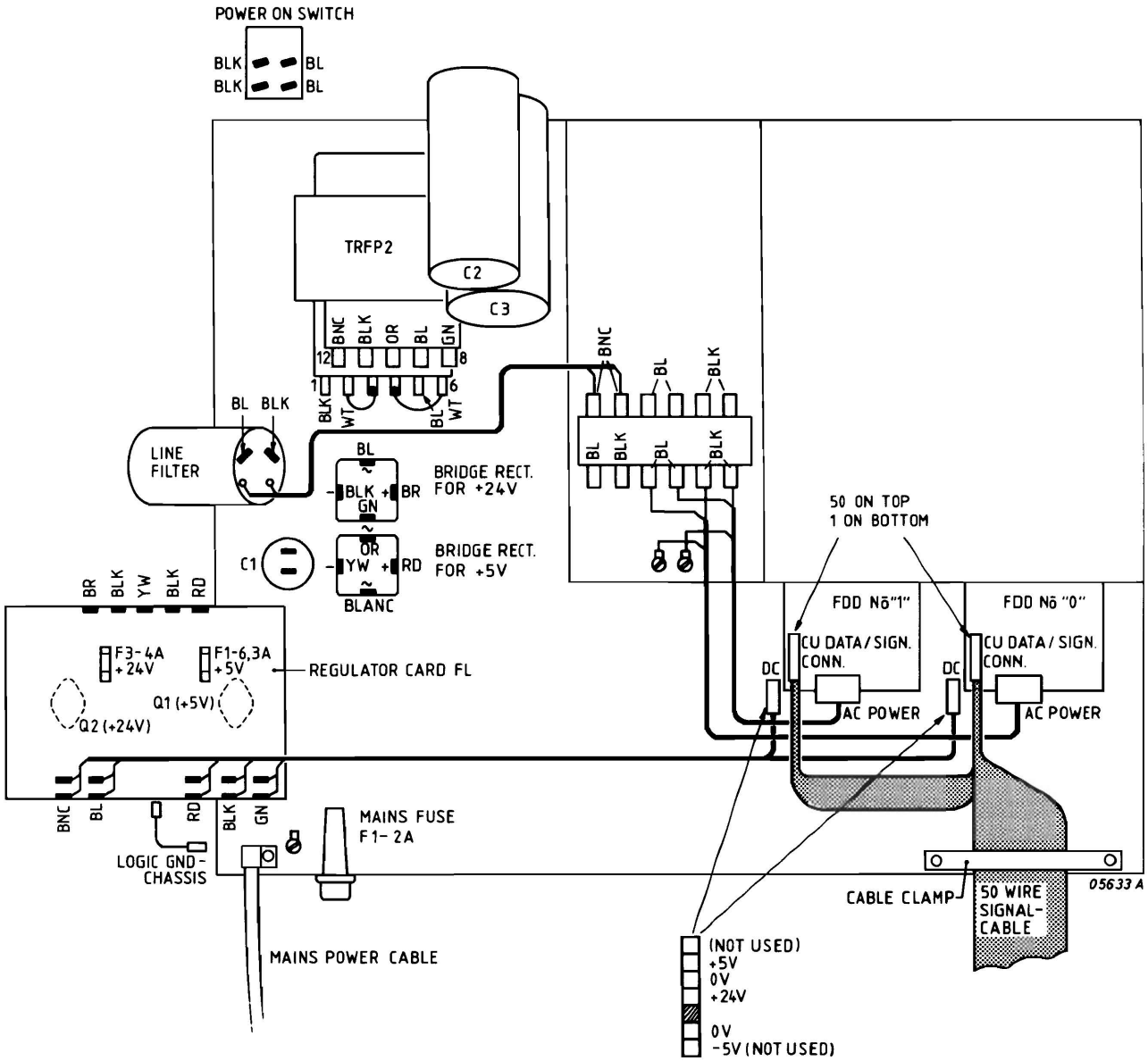

Figure 8.2 FLOPPY DRIVE CHASSIS, REAR VIEW

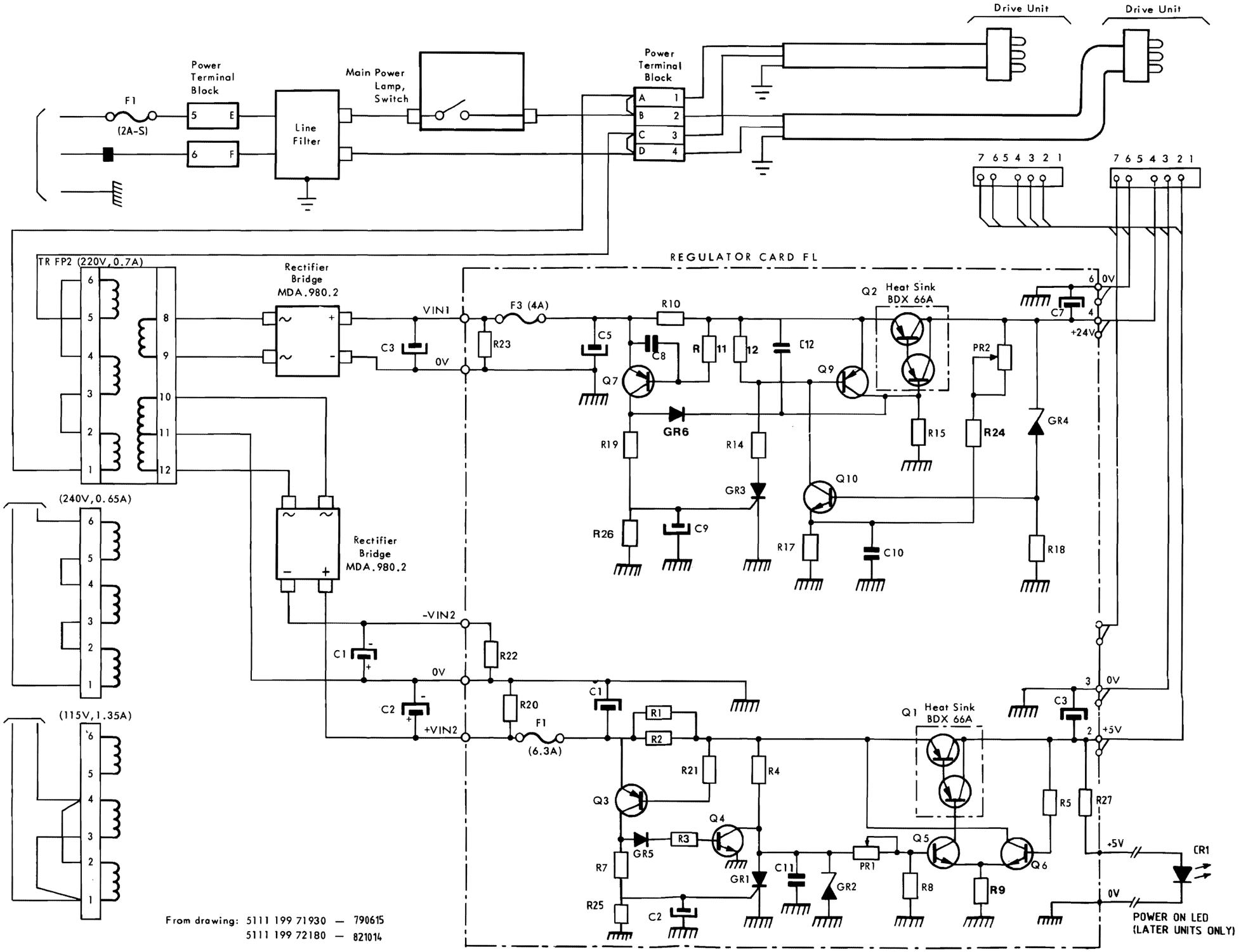

Figure 8.3 POWER SUPPLY SCHEMATIC

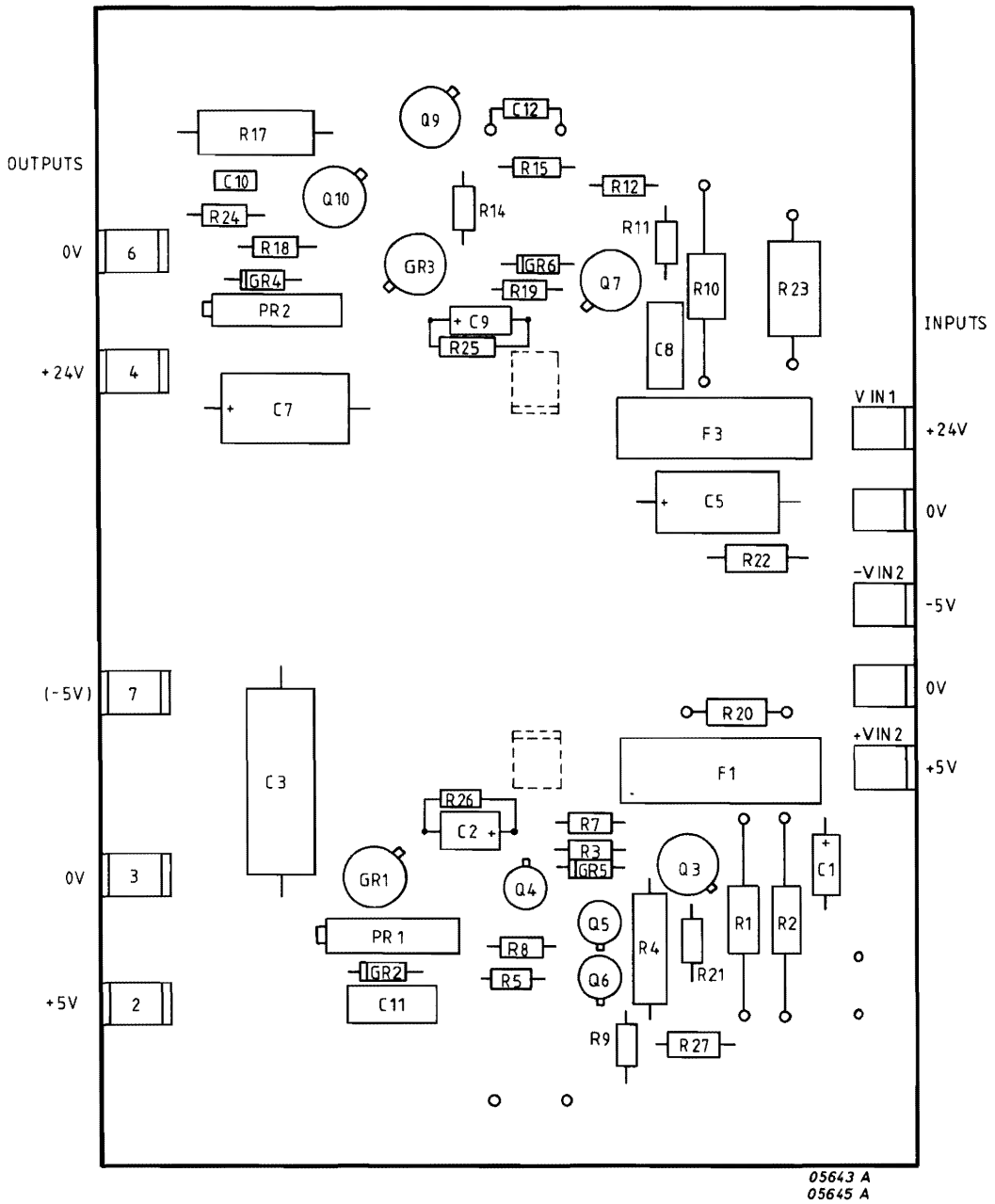

Figure 8.4 POWER SUPPLY REGULATOR CARD FL

8.3 PARTS LIST

8.3.1 POWER SUPPLY

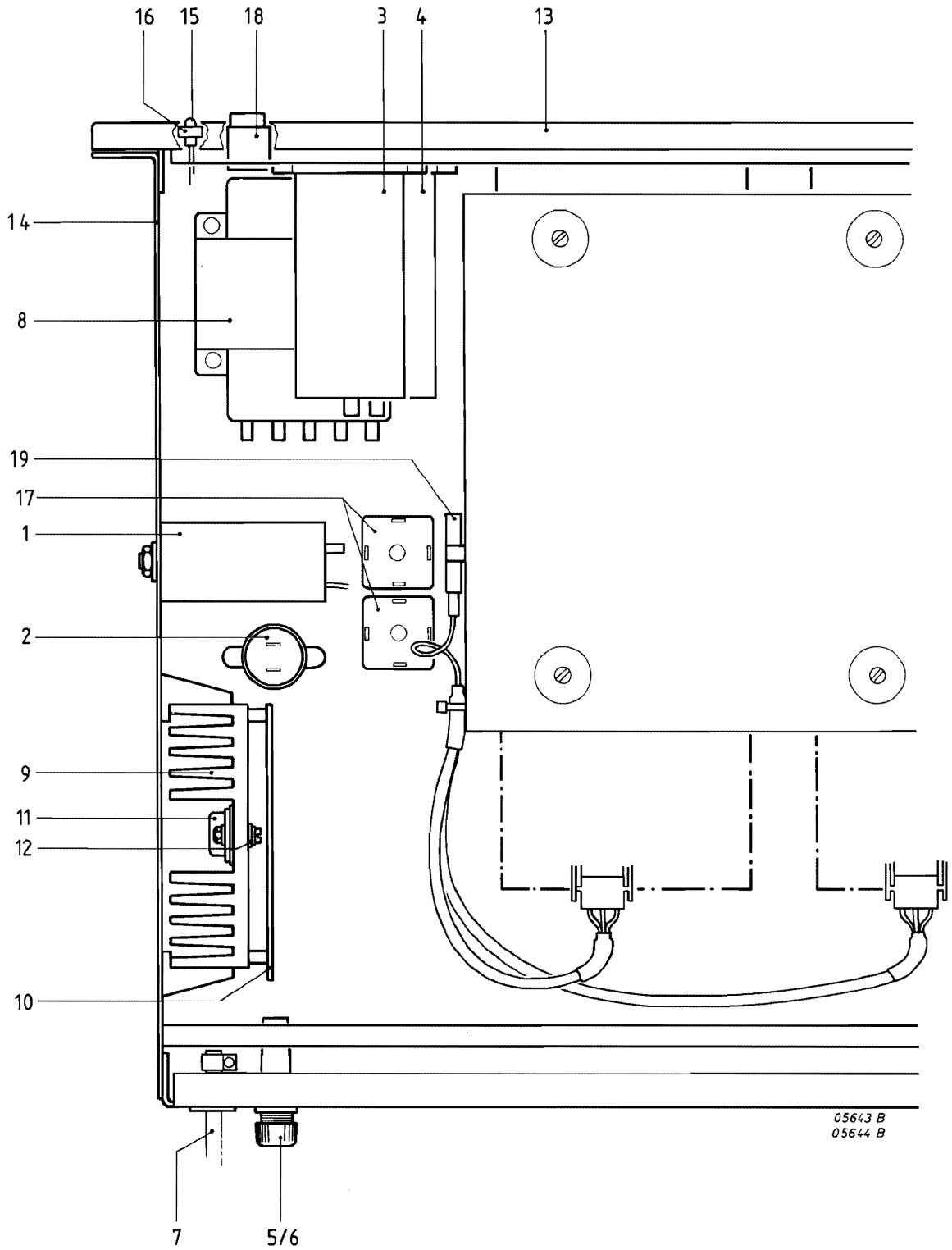

Pos.	Code Number	Description
A	5111 199 71930	Floppy rack assembly
1B	2012 500 20011	Mains filter
2B	2222 071 15472	Elco 4700uF, 16V
3B	2222 114 15333	Elco 33000uF, 16V
4B	2222 114 17333	Elco 33000uF, 40V
5B	2411 086 05062	Fuse D8TD/2
6B	2411 087 03051	Fuse holder 23312E
7B	5111 010 00403	Mains cable
8B	5111 010 03261	Transformer TRFP2
9B	5111 199 71940	Regulator assy (incl. REG FL pcb)
10C	5111 199 72180	PCB REG FL compl. (for break down see next pages)
11C	9331 974 90112	Transistor BDX66A
12C	9390 269 20112	Insulating bush 56261A
13B	5111 199 71950	Front panel
14B	5111 199 72010	Chassis assy
15B	9334 742 20112	Diode CQY24B/II
16B	9336 087 20112	LED holder 757A
17B	9334 414 20112	Bridge rectifier BYW21
18B	2411 126 10031	Mains switch
19B	5111 010 03431	Connection block

8.3.2 PCB REG FL

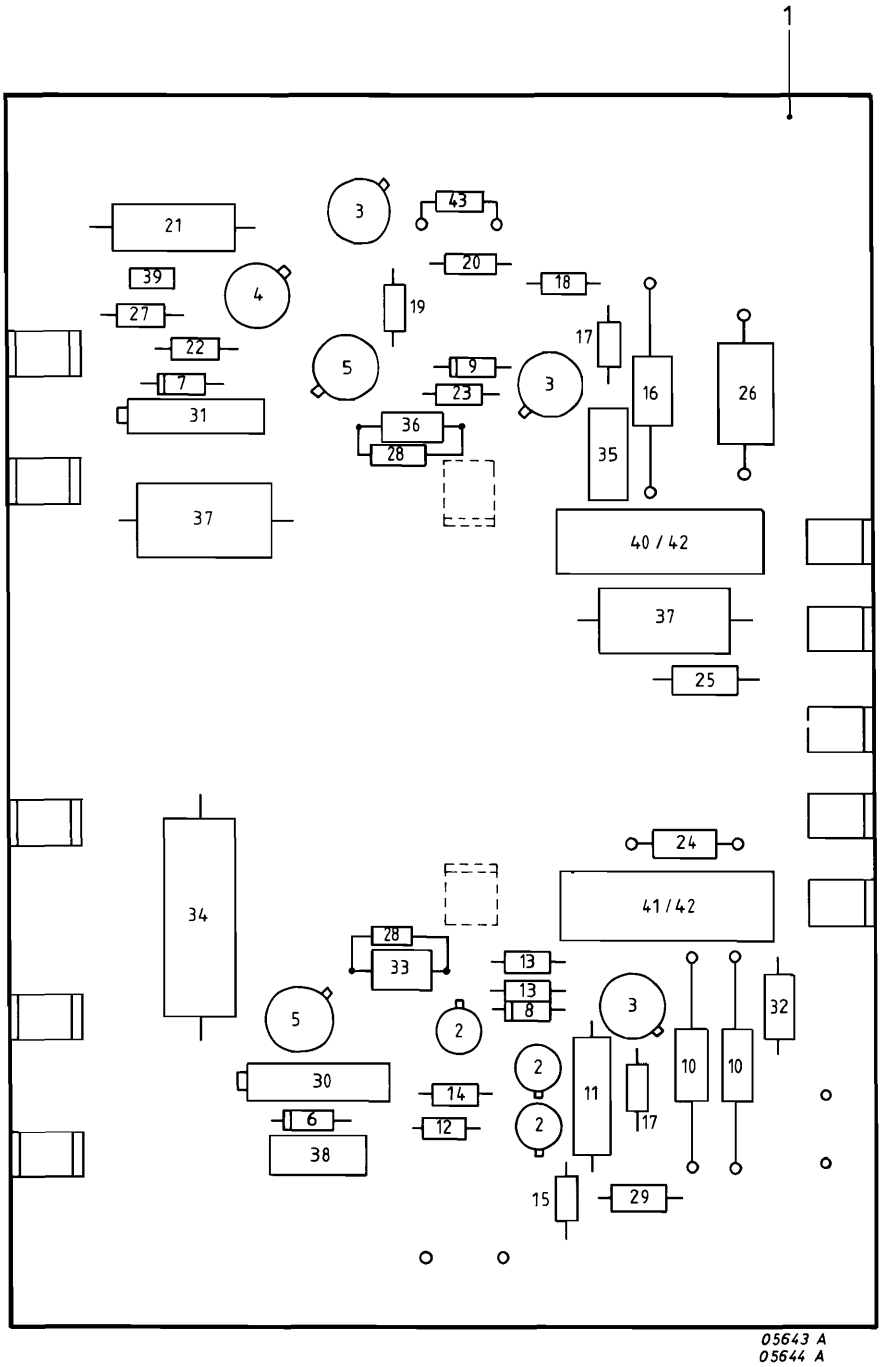

Pos.	Code Number	Description
1B	5111 199 72180	PCB REG FL compl.
2C	9330 219 20112	Transistor BSX20
3C	9330 359 60112	Transistor 2N2905A
4C	9330 393 50112	Transistor 2N2219A
5C	9331 087 10112	Thyristor 2N2323
6C	9331 119 40112	Diode 1N823
7C	9331 177 40112	Diode BZX79C6V2
8C	9331 321 20112	Diode BZX75C2V1
9C	9333 341 80112	Diode BAX12A
10C	2111 250 00175	Resistor 0E22, 10%, RM4x10
11C	2322 153 55111	Resistor 511E, 1%, 0,5W
12C	2322 211 13202	Resistor 2K, 5%, 0,25W
13C	2322 211 13102	Resistor 1K, 5%, 0,25W
14C	2322 151 51003	Resistor 10K, 1%, 0,125W
15C	2322 151 57501	Resistor 750E, 1%, 0,125W
16C	2111 250 00194	Resistor 0E15, 10%, RM4x10
17C	2322 211 13101	Resistor 100E, 5%, 0,25W
18C	2322 211 13681	Resistor 680E, 5%, 0,25W
19C	2322 211 13103	Resistor 10K, 5%, 0,25W
20C	2322 211 13622	Resistor 6K2, 5%, 0,25W
21C	2322 153 56811	Resistor 681E, 1%, 0,5W
22C	2322 211 13362	Resistor 3K6, 5%, 0,25W
23C	2322 211 13203	Resistor 20K, 5%, 0,25W
24C	2322 212 13102	Resistor 1K, 5%, 0,5W
25C	2322 211 13392	Resistor 3K9, 5%, 0,25W
26C	2322 330 22102	Resistor 1K, 5%, 0,25W
27C	2322 151 52151	Resistor 215E, 1%, 0,125W
28C	2322 211 13821	Resistor 820E, 5%, 0,25W
29C	2322 211 13331	Resistor 330E, 5%, 0,25W
30C	5111 000 08271	Potentiometer 5K, 3/4" CERMET
31C	5111 000 08131	Potentiometer 100E, 3/4" CERMET
32C	2222 030 38109	Elco 10uF, 63V
33C	2222 030 36229	Elco 22uF, 25V
34C	2222 031 34471	Elco 470uF, 10V
35C	2222 344 90101	Capacitor 0.1uF, 10%, 100V
36C	2222 030 34101	Elco 100uF, 10V
37C	2222 030 38229	Elco 22uF, 63V
38C	2222 344 21224	Capacitor 0,22uF, 100V
39C	2222 630 18681	Capacitor 680pF, 10%, 110V
40C	2411 086 05115	Fuse 4A
41C	2411 086 05121	Fuse 6,3A
42C	2411 087 02058	Fuse holder 231347
43C	2011 301 55851	Capacitor 22nF, 20%, 400V

8.4 CONVERSION LIST REG. FLOPPY PCB

ARTNR:		S-12NC:	SPEC:
2011 301 55851	###	4822 121 40278	CAP 22KPF 400V
2111 250 00175		5322 113 24158	RES 0E22 10%RWM4X10
2111 250 00194		5322 113 24164	RES 0E15 10% 1W
2122 011 00017		5322 103 10047	POTM 100E P101 2600
2122 011 00024		5322 103 10049	POTM 5K0 0.75W 10%
2222 015 26229		4822 124 20698	CAP 22UF 25V
2222 015 28109		4822 124 20728	CAP 10UF 63V
2222 015 34101		4822 124 20679	CAP 100UF 10V
2222 015 38229		4822 124 20731	CAP 22UF 63V
2222 016 34471		5322 124 21385	CAP 470UF 10V
2222 344 21224		4822 121 40232	CAP 0.22UF 100V
2222 344 90101		5322 121 40323	CAP 100KPF
2222 630 18681		4822 122 30053	KER-CAP 680P 63V
2322 151 51003		4822 116 51253	RES 10K 1% 0.4W
2322 151 52151		5322 116 55274	RES 215E 1% 0.25W
2322 151 57501		4822 116 51234	RES 750E 1% 0.4W
2322 153 55111		5322 116 52966	RES 511E 1% 1.0W
2322 153 56811		5322 116 52967	RES 681E 1% 1.0W
2322 211 13101		4822 110 73081	RES 100E 5% 0.33W
2322 211 13102		4822 116 52391	RES 1K0 5% 0.33W
2322 211 13103		4822 110 73134	RES 10K 5% 0.33W
2322 211 13202		4822 116 52406	RES 2K 5% 0,33W
2322 211 13203		4822 116 52462	RES 20K 5% 0.33W
2322 211 13331		4822 110 73094	RES 330E 5% 0.33W
2322 211 13362		4822 110 70122	RES 3K6 5% 0.33W
2322 211 13392		4822 110 73123	RES 3K9 5% 0.33W
2322 211 13622		4822 116 52439	RES 6K2 5% 0.33W
2322 211 13681		4822 110 73103	RES 680E 5% 0.33W
2322 211 13821		4822 110 73105	RES 820E 5% 0.33W
2322 212 13102		4822 116 52391	RES 1K0 5% 0.4W
2322 330 22102		4822 112 21107	RES 1K 5% 4W
2411 086 05115		4822 253 20026	FUSE 4A
2411 086 05121		4822 253 20028	FUSE 6.3A
2411 087 02058		5322 256 34072	FUSE HOLDER 231347
2422 034 14001		5322 268 14048	TAB(SINGLE)
9330 219 20112		4822 130 41705	TRANS BSX20
9330 359 60112		5322 130 40468	TRANS 2N2905A
9330 393 50112		5322 130 44034	TRANS 2N2219N
9331 087 10112		5322 130 24072	THYR 2N2323
9331 119 40112		5322 130 34405	DIODE 1N823
9331 177 40112		4822 130 34167	DIODE BZX79C6V
9331 321 20112		4822 130 34049	DIODE BZX75C2V1
9333 341 80112		5322 130 34605	DIODE BAX12A
9390 004 90112		5322 255 40059	TRANS MOUNTING TO 5
9390 005 00112		5322 255 40058	TRANS MOUNTING TO18