Field Support Manual
Flexible Disc Drive 1M
P830-025
PTS6791
P4500-035
P300



Telecommunication
and Data Systems

PHILIPS

A PUBLICATION OF
PHILIPS TELECOMMUNICATION AND DATA SYSTEMS
APELDOORN, THE NETHERLANDS

PUB. NO. 5122 991 29444

DATE February 1983

Great care has been taken to ensure that the information contained in this handbook is accurate and complete. Should any errors or omissions be discovered, however, or should any user wish to make a suggestion for improving this handbook, he is invited to send the relevant details to:

CUSTOMER SERVICE DOCUMENTATION AND TRAINING
P.O. BOX 245
7300 AE APELDOORN.
THE NETHERLANDS.

Copyright by **N.V. PHILIPS' GLOEILAMPENFABRIEKEN 1983**
All rights are reserved. Reproduction in whole or in part is prohibited without the written consent of the copyright owner.

SERVICE MANUAL STATUS RECORD

TITLE : FLEXIBLE DISC DRIVE
P830-025, PTS6791, PTS8862, P4500-035, P300

PUBLICATION NUMBER : 5122 991 2944X

PUB. NO. 12th digit	UPDATE PACKAGE	SI. NO.	PAGES AFFECTED	DATE	REMARKS
1				7906	
2				8101	
3				8209	Manual adapted to Revision Level V
4				8302	Addition of appendix, consisting of . schematics old version . pin designations test points

1981 OKT. 2

A10-ES8-F

2-Sided FDD-FSM

REVISION RECORD

REV	DATE	SHEETS AFFECTED	MANUAL/SECTION REVISION STATUS												CHANGE AUTHORITY
			1	2	3	4	5	6	7	8	9	10	11	12	
M	80 SW Oct 20	ii	H	H	K	H	K	M	A	K	A				PL20482
N	80 SW OCT 30	ii, vi, viii	H	H	K	H	N	N	A	K	A				PL20484
P	80 SW DEC 11	ii thru v	H	H	K	H	P	N	A	K	A				PL 20499
R	81 SW MAR 4	ii	H	H	K	H	P	N	A	L	A				PL 20530
S	81 SW APR 24	ii, iv, vi, viii	H	H	K	H	P	S	A	L	A				PL 20546
T	81 MAY 20	ii	H	H	K	H	T	S	A	L	A				PL 20560
U	81 AUG S.W.	ii	H	H	K	H	T	S	A	M	A				PL 20590
V	81 SEP 23 S.W.	ii	H	H	K	H	T	V	A	M	A				PL 20638

COPYRIGHT © 1978, 1979, 1980, 1981

MAGNETIC PERIPHERALS INC.
Printed in the United States of America
All Rights Reserved

Address all comments concerning this publication to the distributor or use the enclosed user comment sheet located in the back of this publication.

PREFACE

This manual provides the information needed to install, operate and maintain the Control Data Corporation Flexible Disk Drive (FDD) and is intended to support customer engineers who require detailed information about the Flexible Disk Drive's operation.

The total content of the manual is comprised of two publications, each having a unique publication number, and is contained in one volume. The Manual's publication number (77614986) is that of the front matter, sections one through seven, and section nine. This number should be used when making reference to the Flexible Disk Drive Hardware Reference Maintenance Manual.

This manual applies to several models of the FDD. A configurator sheet is provided on the following page which describes the FDD configuration that this manual will support. Refer to the equipment nameplate located on the right hand side of the unit (as viewed from the front) to verify the appropriate Hardware Product Configurator (HPC) and Equipment number. Then use the Configurator sheet as a starting point to establish the maintenance level for the device. Section VIII Parts Data is identified by the unique Publication number 75888344.

EMI NOTICE

NOTICE: This equipment has been designed as a component to high standards of design and construction. The product, however, must depend on receiving adequate power and environment from its host equipment in order to obtain optimum operation and to comply with applicable industry and governmental regulations. Special attention must be given by the host manufacturers in the areas of safety, power distribution, grounding, shielding, audible noise control, and temperature regulation of the device to insure specified performance and compliance with all applicable regulations. This equipment is a component supplied without its final enclosure and therefore is not subject to standards imposed by FCC Rules for Electro-Magnetic Interference (EMI). Federal Docket 20780/FCC 80-148 Part 15.

FLEXIBLE DISK DRIVE CONFIGURATOR SHEET

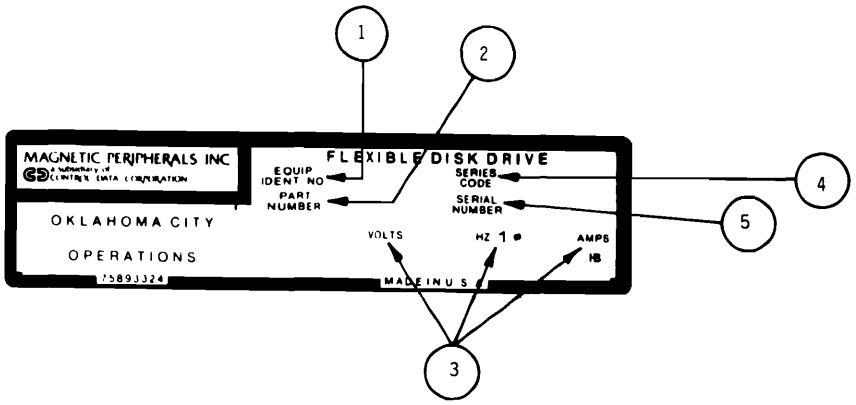

1. EQUIPMENT IDENTIFICATION NO./ HARDWARE PRODUCT CONFIGURATOR (HPC)
2. HARDWARE PRODUCT CONFIGURATOR (HPC)
3. AC POWER REQUIRED (ON UNITS LABELED 50/60 HZ, CHECK CONFIGURATION OF SPINDLE-MOTOR PULLEY FOR FREQUENCY).
4. EQUIPMENT STATUS NUMBER
5. UNIT SERIAL NUMBER

Z204a

POWER REQ												
VDC	+5 & +24 AT J4											
VDC	+5 & +24 AT I/O J1											
VAC	240, 1Ø											
VAC	220, 1Ø											
VAC	120 1Ø											
VAC	100 1Ø											
CIRCUIT BD. CONFIG. (See Table 5-1)												
DAISY-CHAIN INTERFACE												
STANDARD INTERFACE												
HPC NO.	EQUIP NO.											
77618006			X	X				X				
77618017			X	X				X				
77618049			X	X			X					

XX245

TABLE OF CONTENTS

EMI NOTICE iii

GENERAL DESCRIPTION

1.1 INTRODUCTION 1-1
1.2 PURPOSE AND USE OF EQUIPMENT 1-1
1.3 PRODUCT DESCRIPTION 1-1
1.3.1 Physical Description 1-1
1.3.2 Electrical Description 1-2
1.3.3 Performance Characteristics 1-2

OPERATION

2.1 INTRODUCTION 2-1
2.2 OPERATING INSTRUCTIONS 2-1
2.2.1 Flexible-Diskette Loading 2-1
2.3 ERROR RECOVERY 2-1
2.3.1 Seek Error 2-1
2.3.2 Write Error 2-1
2.3.3 Head Error 2-2
2.4 DISKETTE HANDLING RECOMMENDATIONS 2-2

INSTALLATION AND CHECKOUT

3.1 INTRODUCTION 3-1
3.2 UNPACKING 3-1
3.3 INSTALLATION 3-1
3.4 CABLING AND CONNECTIONS 3-1
3.4.1 Input-Output Cable 3-1
3.4.2 DC Power Connection 3-2
3.4.3 AC Power Connection 3-2
3.5 ENVIRONMENT 3-2
3.6 INITIAL CHECKOUT 3-2
3.6.1 Operating Frequency 3-3

THEORY OF OPERATION

4.1 INTRODUCTION 4-1
4.2 GENERAL DESCRIPTION 4-1
4.3 FUNCTIONAL DESCRIPTION 4-3
4.3.1 Control Logic 4-3
4.3.2 Write and Fault Logic 4-5
4.3.3 Read Logic 4-5
4.3.4 Diskette Drive 4-6
4.3.5 Read/Write Heads 4-6
4.4 CONTROL AND DATA LINE CHARACTERISTICS 4-6
4.4.1 Logic Levels 4-6
4.4.2 Transmitter Characteristics 4-6
4.4.3 Line-Receiver Characteristics 4-6
4.4.4 Control-and Data-Line Functions 4-7

DIAGRAMS

5.1 INTRODUCTION 5-1

MAINTENANCE

6.1 INTRODUCTION 6-1
6.2 MAINTENANCE TOOLS 6-1
6.3 TROUBLESHOOTING 6-1
6.3.1 DC Voltage and Signal Check 6-2
6.4 ADJUSTMENT PROCEDURES 6-4
6.4.1 Write-Splice Check and Adjustment 6-4
6.4.2 Actuator Alignment 6-5.1
6.4.3 Clamshell-Closed Switch Adjustment 6-7
6.4.4 Track 00 Optical Sensor Adjustment 6-7
6.4.5 Diskette Ejector 6-8
6.4.6 Diskette-Load-Pad Adjustment 6-8
6.4.7 Head-Unload Clearance 6-9
6.4.8 Band Alignment 6-9
6.4.9 Azimuth Adjustment 6-10
6.5 REMOVAL AND REPLACEMENT PROCEDURES 6-10
6.5.1 Printed-Circuit Board (PWA) 6-11
6.5.2 Head Replacement 6-11
6.5.3 Drive-Motor Assembly 6-14
6.5.4 Actuator Replacement 6-14
6.5.5 Door-lock Solenoid 6-14
6.6 FREQUENCY CONVERSION 6-15
6.6.1 Operating-Frequencies Conversion Procedure ... 6-15

MAINTENANCE AIDS

7.1 INTRODUCTION 7-1
7.2 PHYSICAL DESCRIPTION (Logic) 7-1
7.3 USE OF RELATIVE-LEVEL INDICATORS 7-1
7.4 INTEGRATED CIRCUITS 7-1

APPENDIX A1

- Schematics old version A2 thr. A8
- Pindesignations, Testpoints of new version A9 thr. A14

PARTS DATA (75888344)

8.1 INTRODUCTION 8-1
8.2 ILLUSTRATIONS 8-1
8.3 PARTS LIST 8-1
8.4 PRODUCT CONFIGURATIONS 8-1
8.4.1 Hardware Product Configurator (HPC) 8-1
8.5 REPLACEMENT PARTS 8-1
8.5.1 Spare Parts 8-2
8.6 PARTS LIST INSTRUCTIONS 8-14
8.6.1 Illustration Parts Lists 8-14
8.6.2 Top-Down-Assembly/Component-Parts List 8-14
8.6.3 Cross-Reference Index 8-14
8.6.4 Sheet-Number Referencing 8-14

WIRE LISTS

9.1 INTRODUCTION 9-1
9.2 UPPER-HARNESS ASSEMBLY 9-1
9.3 LOWER-HARNESS ASSEMBLY 9-1
9.4 STEPPER MOTOR 9-1

9.5 DOOR-LOCK-SOLENOID ACTIVITY LED 9-2
9.6 HEAD ASSEMBLIES 9-2

LIST OF ILLUSTRATIONS

FIGURE	TITLE	PAGE
	Configurator Sheet	iv
2-1	Diskette Installation	2-2
3-1	AC Cable Assembly	3-3
4-1	Functional Block Diagram	4-2
5-1	Timing	5-2
5-2	Schematics	5-4
5-3	Assembly and Parts List	5-11
6-1	-Head-Load and Door-Close Switch	6-2
6-2	Differential-Read Signal for Entire Track	6-3
6-3	Differential-Read Signal for Portion of Outer Track	6-3
6-4	Write Data, Write F/F Output, and Head Write Voltage for Outer Track	6-3
6-5a	Write-Splice Timing	6-5
6-5b	Single- and Two-Sided-Sensor Adjustment Means	6-5
6-6	Head-Alignment Amplitude	6-6
6-7	Track 00 Optical-Sensor Output	6-7
6-8	Ejector, Latch and Latch Block	6-8
6-9	Load-Pad Adjustment	6-9
6-10	Head-Unload Clearance	6-9
6-10.1	Azimuth Patterns	6-10.1
6-11	Positioning and Head-Load Mechanism, Clamshell Cover Raised	6-12
6-12	Head-Load Carriage and Stepper-Motor Details	6-13
6-13	Solenoid Mount	6-15
6-14	Drive-Pulley Reversal	6-16
7-1	Inversion Conventions	7-1
7-2	Integrated Circuit	7-2
7-3	Schematic Symbols	7-2
IPC	Section VIII (Parts)	8-1

LIST OF TABLES

TABLE	TITLE	PAGE
4-1	Phase Sequence of Stepper Motor	4-4
4-2	Input/ Output Lines	4-7
5-1	PWA Configurator	5-1
6-1	Test Points	6-2
6-2	Write-Splice Adjustment	6-5

GENERAL DESCRIPTION

1.1 INTRODUCTION

The Flexible-Disk Drive (FDD) is a compact, portable, random-access, data-storage device that interfaces with a central processor via a control unit. Input/Output data and control signals are transmitted by means of an I/O cable.

1.2 PURPOSE AND USE OF EQUIPMENT

Data, in the form of magnetized bits, is written on, or read from the tracks of a rotating diskette. The FDD uses a single, flexible, removable diskette enclosed in a sealed jacket. The unit is capable of hard-sector or soft-sector (missing clock) format operation, but the missing clock must be recovered externally (from the FDD).

1.3 PRODUCT DESCRIPTION

The major FDD components are the spindle, disk drive motor, read/write heads, stepping motor, track-indexing devices and printed-circuit board.

The unit includes Write Protect, Unit Select, Ready, Door Unlock, and Write Fault.

Daisy-chain models are designed so that one to four FDD units may be connected serially to a common controller. The controller continously monitors the operational readiness of each FDD in its chain and commands and controls the reading and writing operation of any selected FDD unit in its chain.

1.3.1 PHYSICAL DESCRIPTION

The physical dimensions for the equipment are as follows:

Height	4.97 inches (126.2 mm)
Width	8.78 inches (223.0 mm)
Depth	14.24 inches (361.7 mm)
Weight	12 lbs. (5.44 kg).

1.3.2 ELECTRICAL DESCRIPTION

The electrical specifications for the equipment are as follows:

- DC Power Source (Supplied by Host Equipment)

  +24 volts (±10%) @ 0.1A (average when deselected)
  1.4A (average when seeking)

  + 5 volts (± 5%) @ 1.1A (average current quiesent state)

- AC Power Source - Refer to the FDD configurator or FDD nameplate to determine AC power requirements.

1.3.3 PERFORMANCE CHARACTERISTICS

The equipment specifications for the FDD are as follows:

- ACCESSING TIME

Maximum Access Time	248 ms
Maximum One-Track Access Time	23 ms
Average Access Time	96 ms

- RECORDING

Mode Density (nominal)	Double Frequency	MFM	Track
Head 0	1836 BPI (72 BPmm)	3672 BPI (145 BPmm)	Outer
	3268 BPI (129 BPmm)	6536 BPI (257 BPmm)	Inner
Head 1	1879 BPI (74 BPmm)	3758 BPI (148 BPmm)	Outer
	3408 BPI (134 BPmm)	6816 BPI (268 BPmm)	Inner
Data Transfer Rate	249, 984 bits/sec	499, 968 bits/sec	
Bits/Byte	8	8	
Bits/Track	41, 664	83, 328	
Tracks/Surface	77	77	
Sectors	Format Determined	Format Determined	

- DATA CAPACITY

Bytes/Track	5,208	10,416
Bits/Track	41,664	83,328
Bits/Surface	3,208,128	6,416,256

- **FLEXIBLE DISKETTE (Optional)**

	CDC 421 Single-Sided, Single-Density CDC 423 Single-Sided, Double-Density CDC 424 Double-Sided, Single-Density CDC 425 Double-Sided, Double-Density
Diskette Dimensions	8 x 8 inches (203.2 x 203.2 mm) (including jacket)
Useable Diskette Recording Surfaces	2
Diskette Surface Diameter	7.88 in. (200.1 mm)
Recording Radii (Nominal)	
Head 0	Track 76 2.0290 in. (51.5 mm) Inner Track 00 3.6123 in. (91.8 mm) Outer
Head 1	Track 76 1.9457 in. (49.4 mm) Inner Track 00 3.5290 in. (89.6 mm) Outer
Diskette Surface Coating	Magnetic Oxide
Diskette Velocity	360 r/min

- **READ/WRITE HEADS**

Heads/Unit	2	
Track Width	0.013 in.	(0.33 mm)
Track Spacing	0.02083 in.	(0.529 mm)
Erase to Read/Write Gap	0.036 in	(0.914 mm).

OPERATION

2.1 INTRODUCTION

The FDD is under direct control of the input/output and power sources. No special start-up procedure is required. Operation is fully automatic and requires no operator intervention during normal operation.

2.2 OPERATING INSTRUCTIONS

Verify that power and I/O cables are securely attached before operation.

2.2.1 FLEXIBLE DISKETTE LOADING

a. Apply AC/DC power to unit.
b. Open FDD door.
c. Remove diskette from storage envelope as shown in Figure 2-1.
d. Be sure the Write-Protect slot in the jacket is open, as shown in Figure 2-1, if the diskette is to be write-protected.
e. If a diskette with a Write-Protect slot is not utilizing the Write Protect, that is, it will be written on, the slot must be covered with a piece of tape which is opaque to infrared.
f. Carefully slide diskette into FDD, as shown in Figure 2-1, until jacket is solidly against stops and sets the ejector mechanism.
g. Carefully close unit door. Ensure that jacket is properly seated, spindle has engaged diskette, and door is closed and latched.
h. Protect the empty envelope from liquids, dust, and metallic materials.

2.2.2 FLEXIBLE DISKETTE REMOVAL

a. Open FDD door to stop diskette rotation and disengage spindle.
b. Remove diskette from FDD and put it in its storage envelope.
c. Close FDD door.

2.3 ERROR RECOVERY

The following paragraphs give information needed to recover from possible errors in equipment operation.

2.3.1 SEEK ERROR

Seek errors will rarely occur unless the stepping rate is exceeded. In the event of a seek error, recalibration of track location can be achieved by repetitive Step Out commands until a Track 00 signal is received.

2.3.2 WRITE ERROR

To guard against degradation from imperfections in the media, no more than four attempts to write a record should be used when read after write errors are encountered. In the event a record cannot be successfully written within four attempts, it is recommended that the sector or track be labeled defective and an alternate sector or track assigned. If more than two defective tracks are encountered, it is recommended that the diskette be replaced.

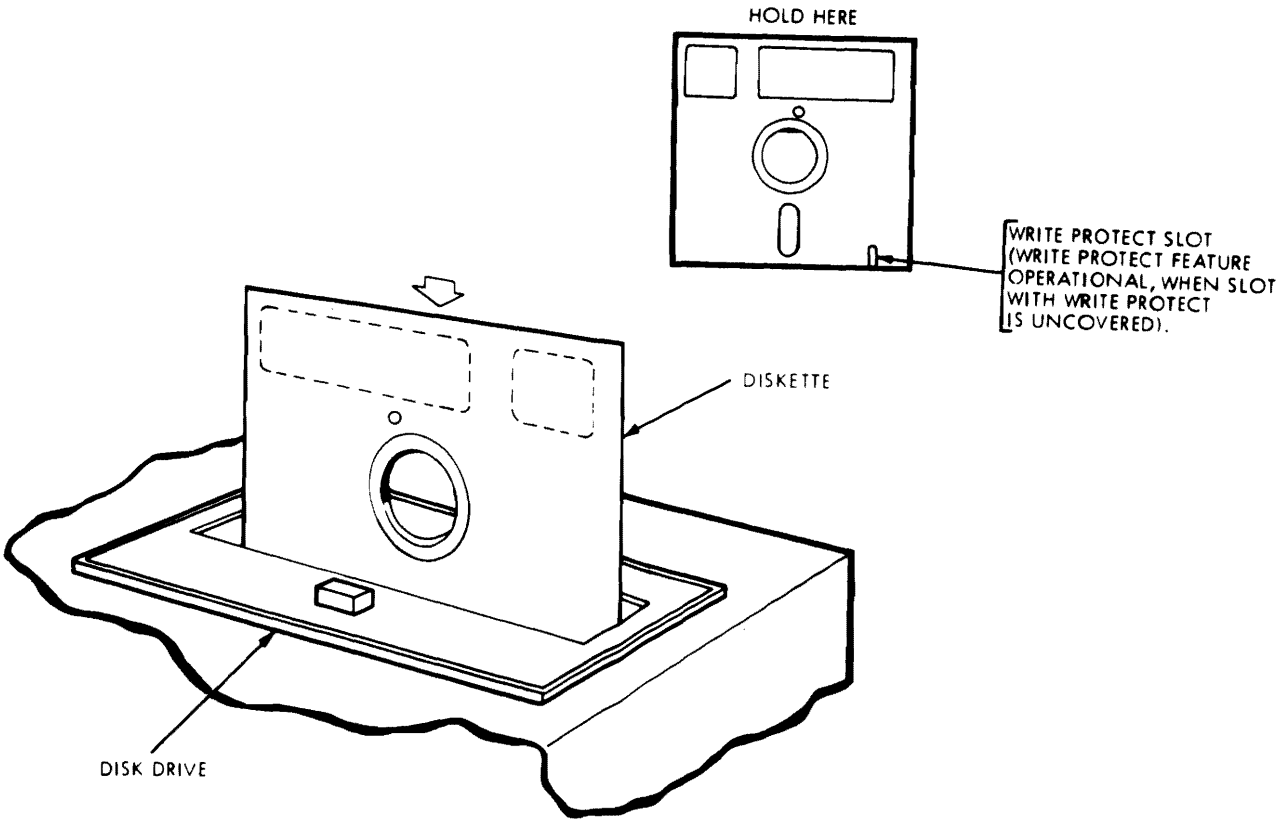

X260a

Figure 2-1. Diskette Installation

2.3.3 READ ERROR

In the event of a Read error, up to five attempts should be made to recover with re-reads. If after five attempts the data has not been recovered, retract the head to Track 00, reseek to the data track and attempt five additonal rereads. Unloading the head when data transfers are not imminent will increase the data reliability and extend the diskette life.

2.4 DISKETTE HANDLING RECOMMENDATIONS

Since the recorded diskette contains vital information, reasonable care should be exercised in its handling. Longer diskette life and trouble free operation will result if the following recommendations are followed.

a. Do not use a writing device which deposits flakes e.g., lead or grease pencils, when writing on diskette jacket label.

b. Do not fasten paper clips to diskette jacket edges.
c. Do not touch diskette surface exposed by jacket slot.
d. Do not clean diskette in any manner.
e. Keep diskette away from magnetic fields and from ferromagnetic materials that may be magnetized.
f. Return diskette to envelope when removed from FDD.
g. Protect diskette from liquids, dust, and metallic substances at all times.
h. Do not exceed the following storage environmental conditions:

Temperature:	50° to 125°F (10° to 56.1°C)
Relative Humidity:	8% to 80%
Maximum Wet Bulb:	85°F (29.4°C)

i. Diskettes should be stored in a box or cabinet when not in use.
j. Remove diskette before applying or removing power to the FDD.

INSTALLATION AND CHECKOUT

3.1 INTRODUCTION

This section provides the information and procedures necessary to put an FDD into operation.

3.2 UNPACKING

Unpack FDD as follows:

a. Cut banding and lift top half of styrofoam shell from unit.
b. Lift unit in polyethylene bag from bottom half of styrofoam shell and remove unit from polyethylene bag.

During unpacking, care must be used so that any tools being used do not inflict damage to the unit. As a unit is unpacked, inspect it for possible shipping damage. All claims for this type of damage should be filed promptly with the carrier involved. If a claim is filed for damages, save the original packing materials.

3.3 INSTALLATION

Install the FDD in the designated location in the host equipment. Remove blank head protective diskette from unit.

3.4 CABLING AND CONNECTIONS

Connect the AC cable, I/O cable, and DC cable if applicable between the FDD and host equipment. Adequate circuit protective devices must be provided by the host equipment to meet applicable safety standards.

3.4.1 INPUT-OUTPUT CABLE

The maximum cable length from connector to connector is 25 feet. The characteristic impedance typically is 120 ohms.

The information relative to the I/O connector (J1) and pin/signal assignments are defined in Table 5-1, Figure 5-2, and Figure 5-3.

The terminating resistor pack RM1 (see Figure 5-3) is to be installed in the end FDD (farthest from the controller) ONLY. Terminators in more then one FDD during daisy-chain hookup may result in damage to the controller.

Switch S2 is provided on the circuit board to enable changing the position of the FDD in the daisy chain by switch selection. Therefore, to set the position of the FDD in the daisy chain, activate S2-1 and S2-5 for position 1, S2-2 and S2-6 for position 2, S2-3 and S2-7 for position 3, and S2-4 and S2-8 for position 4. All other of the above positions are to be deactivated.

3.4.2 DC POWER CONNECTION

Daisy-chain FDD models receive DC power (user-supplied) through a power cable which interfaces with its mating connector (J4) on the printed-circuit board. The pin assignments and line functions are shown on sheet 1 of the schematics, Figure 5-2. The mating connector is described in Figure 5-3.

3.4.3 AC POWER CONNECTION

The mating connector cable should consist of stranded wire, 18 AWG minimum with center-pin connection utilized as frame ground. Refer to Figure 3-1 for connector part numbers and attachment.

3.5 ENVIRONMENT

Operating and storage environments of the FDD are as follows:

Operating:	50° to 100°F (10° to 38°C) 12°F (6.6°C)/hr max. fluctuation 20% to 80% relative humidity (providing there is no condensation)
Non-Operating:	-30° to +150°F (-35° to 65°C) 5% to 95% relative humidity (providing there is no condensation) Max. Wet Bulb 80°F (27°C).

3.6 INITIAL CHECKOUT

This procedure should be used to determine that the FDD is operational. The procedure assumes that the unit is installed and the I/O and power cables are connected.

a. Apply AC power to unit and visually check that the spindle rotates. NOTE: Assure that the protective disk has been removed before applying power.
b. Apply DC power to unit.
c. For daisy-chain FDD models using dipswitch S2:

    1. Close one of the Unit Select switches (dipswitch position, 1, 2, 3, or 4) located on the circuit board.
    2. Close one of the Ready switches (dipswitch position 5, 6, 7, or 8) located on the circuit board.
    3. If the Door Unlock option is installed, close one of the Door Unlock switches (dip switch position 10 or 11) located on the circuit board.
    4. Depending on the controller, select either external erase, switch position 12, or internal erase, switch position 9.

d. Insert diskette as described in Section 2.
e. Apply a head-load-command signal to the unit and close the access door. Check that the head-load solenoid actuates, and the door microswitch is actuated.
f. Apply a stepping-command signal to the unit and check that the actuator steps the head as commanded.
g. Remove the command signals and power from the unit.
h. Remove diskette.

3.6.1 OPERATION FREQUENCY

If the required operating frequency is different than that which the unit is configured, the procedure for converting operating frequencies using the dual-diameter reversible pulley is provided in Section 6, "Frequency Conversion" for applicable models.

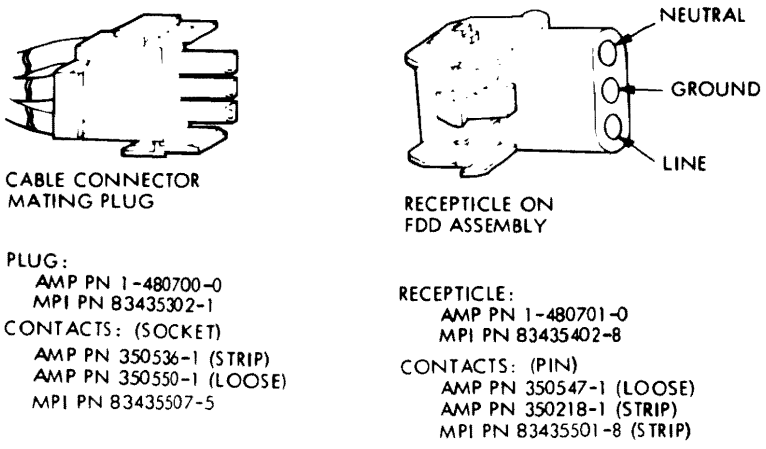

Figure 3-1. AC Cable Assembly

THEORY OF OPERATION

4.1 INTRODUCTION

The basic functions performed by daisy-chain models of the FDD are: (1) Receive and generate control signals, (2) Position the Read/Write heads on selected tracks, and (3) Write or Read data upon command from the FDD controller. These functions are accomplished upon selection after initial indication to the controller that the FDD is ready to operate and accept commands.

The theory of operation for the FDD is divided into two parts. The first part gives a general theory of operation. The second part gives a detailed functional description of all major components both electronic and mechanical and describes all signals exchanged between the FDD and the controller.

4.2 GENERAL DESCRIPTION

The basic function of the FDD is to indicate to the controller when it is ready to operate, and respond to the commands of the controller to: (1) receive and generate control signals; (2) position the Read/Write heads to selected tracks; and (3) write or read data on the diskette when selected. All of the functions described which are options may not apply to your particular FDD model. (Refer to the Preface at the front of the manual.)

Signals received and transmitted by the FDD are shown in Figure 4-1. All signals received by the FDD, except the door-unlock signal are gated with Unit Select so that no stepping, reading or writing can be performed on an unselected FDD. Also, all signals generated within the FDD, except the Ready signal, are gated with Unit Select so that no signals can be transmitted from an unselected FDD.

During the write operation, the selected FDD receives Head Select, Write Enable, Write Data and Low Current (Track 43 or greater) signals. If a Write Fault occurs, it will be transmitted to the controller. During read operation, the selected FDD will receive a Head Load command. The Write Enable line remaining high implies a read operation. Under these condition, the FDD will transmit Composite Read Data signals to the controller. Controller Step and Direction commands are received initiating a track-seek operation on a selected FDD. The FDD transmits Index and Sector pulses as long as it selected. Also, the selected FDD transmits a Track 00 signal to the controller whenever the Read/Write heads are at Track 00.

Positioning of the carriage-mounted Read/Write heads is accomplished by a band-driven stepper motor. Each step command from the user system increments the stepper motor which, in turn, moves the band. The band increments the Read/Write heads one track position for each step command.

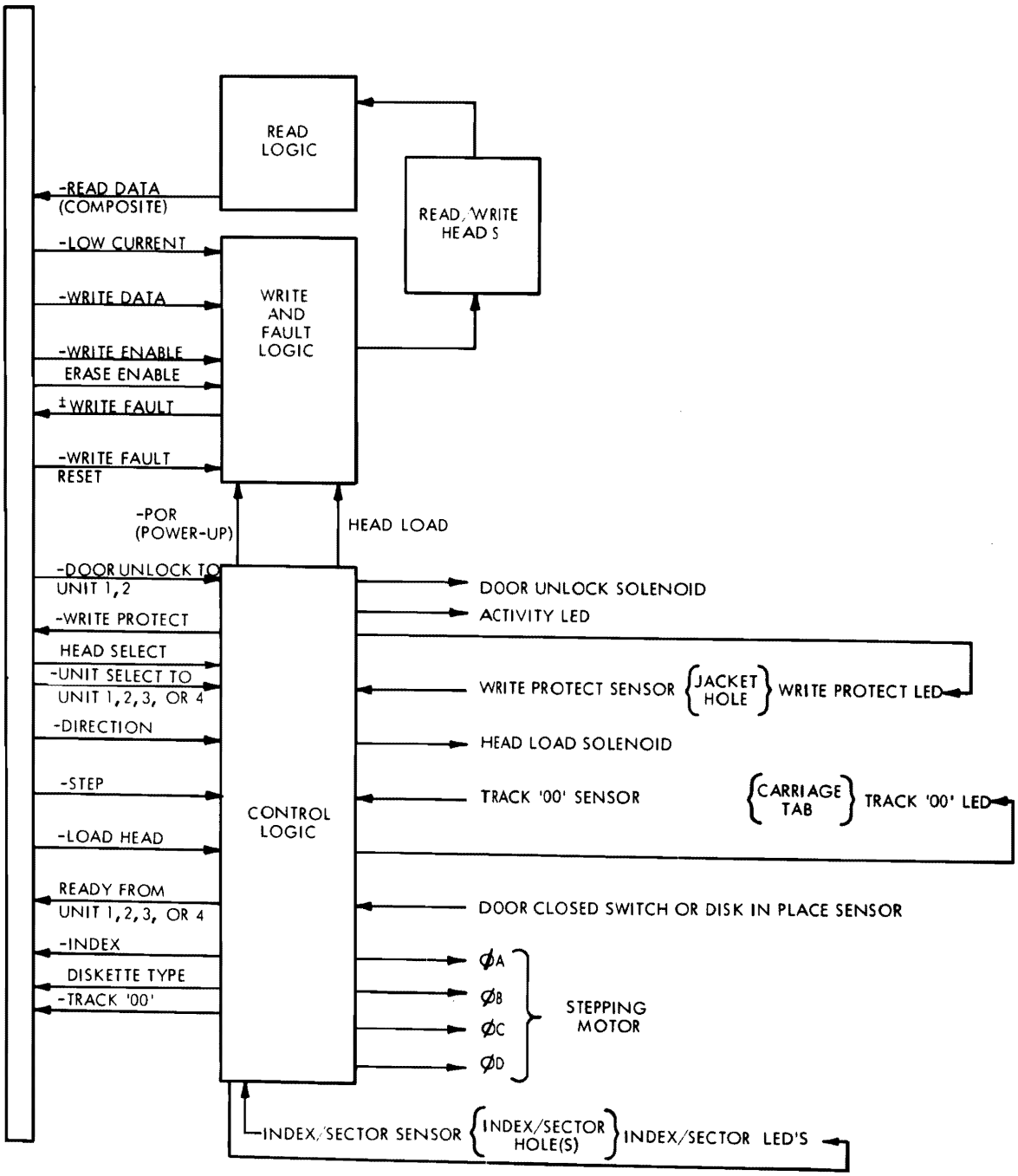

ZZ170a

Figure 4-1. Functional Block Diagram

A reading or writing operation begins by placing the Read/Write heads in contact with the diskette with a Head-Load command and at the desired track. To write on the diskette, Write Enable is sent by the controller to condition the write logic. The write current then in the head, reverses polarity synchronous with the low-to-high transitions of the Write-Data pulses from the controller. The current reversals cause magnetic flux reversals on the desired diskette track. Erasure of previously recorded data is simultaneously accomplished during the writing operation in addition to a delayed-tunnel-erase which ensures disk interchangeability.

To read from the diskette, magnetized bits in the format of the pre-recorded data are sensed by the Read/Write heads. This signal is amplified, digitized and transmitted to the user system.

4.3 FUNCTIONAL DESCRIPTION

Refer to Figure 4-1, 5-1, and the Schematic Diagram (Section 5) for the following discussion.

The FDD is divided into the following major functional areas:

a. Control Logic
b. Write and Fault Logic
c. Stepper Control
d. Read Logic
e. Diskette Drive
f. Read/Write Head
g. Index
h. Door Unlock
i. Unit Select

4.3.1 CONTROL LOGIC

The functions of the control logic are to generate the signals that (a) establish the ready status of the FDD, (b) step the Read/Write heads in or out upon selection and command of the controller, (c) load the heads on the diskette for read/write operations, (d) protect the diskette from writing if the write-protect hole is present, (e) indicate when the Read/Write head is at Track 00, (f) generate the Index and Sector pulses when the diskette is rotating and the FDD is selected, (g) unlock the FDD door latch upon command of the controller through one of two switch-selected control lines, (h) unit selection of the FDD, (i) select head 0 or 1 for Read/Write operation.

a. The Ready signal is generated when the diskette comes up to proper operating speed. The Index pulses are used to re-trigger the multivibrator (U16 pin 10). The output of this element will remain high on a continuous basis when the repetition rate of the Index pulses is shorter than the time out of U16 pin 10. This logic function is used to control the R/S flip flop U20 to generate the Ready signal. Jumper W30 or DIP switch S2 (5, 6, 7 and 8) allow selection of the relative position of each FDD within the daisy-chain configuration.

b. At initial voltage application, the two flip flops of U10 and U20 are asynchronously reset through the action of comparator U4. At the instant the 5 V appears, U4 pin 7 will go high, forcing pins 11 and 10 of U13 low, and forcing output pins 7 and 9 of U10 high and pin 8 of U20 high. As capacitor C6 is charged, U4 pin 7 will switch low, assisted by hysteresis. This will cause the reset signal to go high and remain high as long as the +5 volts remains present.

c. Each step command received initiates a step sequence that controls the stepper motor. The logic level of the Direction signal determines whether the phase sequence is stepping in or out per Table 4-1.

Table 4-1. Phase Sequence of Stepper Motor

Change the Active Ø		To Step One Track
From	To	
A	A+B	IN
A+B	B	
B	B+C	
B+C	C	
A	A+D	OUT
A+D	D	
D	C+D	
C+D	C	

A low level of the Direction line causes the Read/Write head to step toward the spindle, and a high level causes the Read/Write head to step away from the spindle.

Drive to the specific stepper motor phases, A, B, C, and D is provided by logic-driven Darlington transistors Q2, 3, 4, and 5. Step information is decoded by the programmed ROM (Read-Only Memory) U24 and is used to control the driver transistors. The ROM is controlled by the start-stop sequence generator, U21 pin 7, U28 pin 8, U31 pin 6, U13 pin 12, U10 pin 12, U13 pin 4 and U15 pin 6. The circuit at U28 pin 8 produces a pulse for each trailing edge of U21 pin 6&7. The circuits at U13 pin 4 and U15 pin 6 produce a pulse for each edge change on the input. The sequence generator is started by step pulses from U5 pin 7. It is stopped after the proper sequence by U24 pin 5 shaped by U34 pin 10 and U36 pin 2. The timing of U21 pin 6 controls the speed of the sequence generator and is nominally set at 0.5 ms.

One-shot U25 pin 10 is continuously being retriggered by the step pulse and times out on the last pulse. One-shot U25 pin 10 controls how long +24 volts will be applied to the stepper motor. One-shot U29 pin 9 is triggered by the last step information and is used to control settling time. It triggers U25 pin 6 to reapply +24 volts to the stepper motor for position accuracy. One-shot U29 pin 6 determines

the duration of the reverse step damping. Power on reset will cause the stepper motor to sequence to ØA by resetting U10.

d. The Read/Write heads of a selected FDD can be loaded when the disk is fully installed and the front panel door is closed. Closing the front-panel door actuates the door interlock switch which completes the circuit to the head-load solenoid. When the controller sends a Head-Load signal, the head-load solenoid is energized causing the armature bail to actuate. The actuation of the bail permits the head arms to load the heads against the diskette surface.

   The head is loaded by energizing the solenoid through R83 which slows down the pull-in of the solenoid. After a delay, full current is applied to the solenoid through Q8.

e. The Write-Protect function is accomplished through use of an LED (light-emitting diode) and a photo-transistor. These are mounted such that the presence of a Write Protect slot in the jacket of the diskette will cause pin 14 of comparator U32 to to be driven high. This signal is gated with Unit Select and Write Enable to inhibit writing on any diskette possessing a write-protect slot.

f. Track 00 signal is generated when the carriage assembly tab is sensed by the Track 00 optical switch. Closing this switch causes U32 pin 13 to switch low assisted by hysteresis. The output of U13 (pin 2) is gated with ØA, Unit Select, and Step Out direction to provide the Track 00 signal that is transmitted to the controller from U23 pin 3.

g. The beginning of each diskette track is indicated by an Index pulse. The diskette rotates between a light source (LED) and a sensor (photo transistor). When the Index hole in the diskette passes over the light source, light is detected by the sensor. The sensor output is amplified and transmitted to the controller as the Index pulse when the FDD is selected.

   The unit has two Index detectors, one for two-sided diskettes and one for single-sided diskettes. Latch U6 pin 3 and U6 pin 6 determine the type of diskette involved. U6 pin 6 is set low for a two-sided diskette and high for a single-sided diskette. This signal is gated with Unit Select and sent to the interface by U23 pin 6.

   Two-sided and single-sided Index is gated at U9 pins 1 and 2 and is provided to U5 pin 12 for shaping.

h. The Door Unlock function enables the controller to activate a door-unlocking solenoid and LED indicator by applying a low level to one of two jumper or switch-selectable control lines. These lines are not gated with Unit Select. The two unlock positions of dipswitch S2 are 10 and 11.

i. The Unit Select function inhibits all command and status signals except Door Unlock and Ready. The position of the FDD in the daisy-chain configuration is determined by the activation of switches 1, 2, 3, and 4.

4.3.2 WRITE AND FAULT LOGIC

A write operation begins with a Write Enable command from the controller when the FDD is selected. This command simultaneously enables the Write-Data switching drivers (flip flop U11 pins 5 and 6), the Write-Data gate U33 pin 6, blocks the input to the read circuit by reverse-biasing diodes in U22, and after a delay energizes the erase windings. Data applied to the Write-Data input alternately switches a constant write current through the write drivers to the head windings. Low-Current operation, used when writing on track 43 or greater, is selected by switching a shunt resistor R55 into the write current source. The current source U30 provides current to the emitters of the write transistors U30.

Head-Select signal when low selects head 0 by turning on U35 pin 14 causing its collector to be at +12 volts while U35 pin 8 is at ground. When the Head-Select signal goes high, it will cause U35 pin 14 to ground and U35 pin 8 to +12 volts selecting head 1. Q7 and U35 pin 7 control the +12 voltage with respect to loss of +5 control voltage.

A Write-Fault signal is generated if Write Enable is commanded and the head is not loaded (head-load solenoid not energized), or Write Enable is commanded and no data is applied, or Write Enable is commanded but Write Data is applied at the wrong rate. Either one or both of the conditions sets the Write-Fault latch U12. Commanding a Write-Fault Reset clears the Write-Fault signal by resetting the Write-Fault latch.

4.3.3 READ LOGIC

Read operation is enabled when the Read/Write heads are loaded on the diskette and Write Enable is not commanded. With Write Enable not commanded, the data blocking diodes U22 are forward-biased and data sensed by the Read/Write head is fed to the Read Data circuit. The read signal from the diskette is in the form of a sine wave.

This analog signal is amplified by U18, filtered, differentiated by C22/R24 and C23/R25, amplified by U8, and coupled to a comparator/logic circuit to detect zero crossings and reject noise in the differentiated read signal.

The out-of-phase comparators U1 pins 7 and 12 have rise and fall times whose differences are exaggerated by slow-down capacitor C5. This results in a narrow negative pulse at U9 pin 11 which triggers a one microsecond retriggerable one-shot, U2 pin 9.

Flip flop U11 pins 8 and 9 perform a noise-rejection function in that noise near the zero crossings of the amplified differentiated data only result in retriggering U2 pin 9. This appears as jitter in the clock for the flip flop whose data input, derived from redundant comparator U4 pin 12, has by that time stabilized.

Another slow-down capacitor, C27, causes a negative pulse to appear at the output of U9 pin 8 whenever the flip flop toggles. Although shifted in time by approximately the delay of one-shot U2 pin 9, each pulse corresponds to a zero crossing of the differentiated signal, and a peak of the analog read signal. Jitter at the flip-flop clock input and U9 pin 8, which is due to noise at the zero crossings, will not affect the 250-ns composite-data pulse width.

4.3.4 DISKETTE DRIVE

Diskette drive is accomplished by clamping the diskette between the cone assembly and a belt-driven spindle. The spindle is rotated at 360 r/min by the diskette drive motor. A dual pulley permits 50 or 60 Hz operation without a motor change.

4.3.5 READ/WRITE HEADS

The Read/Write heads are in direct contact with the diskette during read or write operation. Head load is achieved by a solenoid-actuated bail allowing the head arms to load the Read/Write heads against the diskette. The head surfaces are designed for maximum signal transfer to and from the magnetic surface of the diskette with minimum head/disk wear. The tunnel-erase gap DC-erases the intra-track area to improve off-track signal-to-noise ratio and permit diskette interchange between units.

4.4 CONTROL AND DATA LINE CHARACTERISTICS

All signal lines must be terminated at the receiver with a characteristic impedance of 120 ohms, typically. Transmission is by 26 AWG (min.), 120-ohm flat cable or twisted pair (one twist per inch) with a maximum line length of 25 feet. Figure 5-1 shows the timing of typical operations.

4.4.1 LOGIC LEVELS

The following definitions will be used throughout this manual:

low = Logic 1, Active State	Refers to the low-voltage condition +0.4VDC Max.
high = Logic 0, Inactive State	Refers to the high-voltage condition +2.4VDC Min.

4.4.2 TRANSMITTER CHARACTERISTICS

The FDD uses the TTL7438 (quad 2-input buffer or driver) or equivalent to transmit all control and data signals. This transmitter is capable of sinking a current of 48ma with an output voltage of 0.4 volts.

4.4.3 LINE-RECEIVER CHARACTERISTICS

The FDD uses the SN7400 family gates or equivalent for line receivers. The input of each receiver is terminated in 120 ohns.

4.4.4 CONTROL AND DATA LINE FUNCTIONS

The signals that are exchanged are described in Table 4-2 and are shown relative to a point of origin in Figure 4-1.

SIGNAL	FUNCTION
INPUT LINES	
-DIRECTION	A logic 1 level on this line and step pulse causes the head to move one track inward toward the center of the diskette. A logic 0 level on this line and step pulse causes the head to move one track outward from the center of the diskette.
-STEP	A logic 1 level pulse on this line causes the head to move one track as determined by the direction line.
-HEAD LOAD	A logic 1 level on this line loads the heads against the diskette.
-ERASE ENABLE	A low on this line will cause erase current to be applied to the selected head if switch S2 position 12 is closed.

Table 4-2. Input/Output Lines

Table 4-2. (continued)

SIGNAL	FUNCTION
INPUT LINES	
-WRITE ENABLE	To enable the FDD write driver, this line is held at a logic 1.
-WRITE FAULT RESET	A logic 1 level on this line clears the Write-Fault latch.
-WRITE DATA	This line contains the composite coded write clock and data information to the FDD.
-LOW CURRENT	This line reduces write current for tracks 43 or greater. A low level reduces write current.
-UNIT SELECT	On this line a logic 1 level enables the FDD interface except for -Door Unlock and -Ready.
-DOOR UNLOCK	A logic 1 level on this line illuminates an LED indicator on the front panel of the FDD and activates a solenoid which unlocks the door-latch mechanism, permitting manual opening of the door.
HEAD SELECT	A high level on this line selects head 0 (lower diskette surface). A low selects head 1.
OUTPUT LINES	
-READY	A logic 1 level indicates that the door is closed, and a diskette is rotating.
-INDEX	This line gives an indication of the rotational position of the diskette by outputting a logic 1 pulse for every Index hole of the diskette.

Table 4-2. (continued)

SIGNAL	FUNCTION
OUTPUT LINES	
-WRITE FAULT	A logic 1 level indicates one or more of the following fault conditions. -Write Enable without head Load. -Write Enable without write data. Incorrect write data rate.
-TRACK 00	A logic 1 level indicates that the head is positioned over Track 00.
-WRITE PROTECT	Logic 1 level indicates that the slot on the diskette is uncovered.
-READ DATA (Composite)	This line contains the unseparated data and clock information.
DISKETTE TYPE	This line is low for a two-sided diskette and high for a single-sided diskette.

DIAGRAMS

5.1 INTRODUCTION

This section contains the printed-circuit-board documentation and related timing diagrams. This documentation applies to the printed-circuit boards listed in Table 5-1. Refer to the Configurator sheet, located in the front of the manual, to determine the assembly number of the circuit board being serviced.

Figure 5-1 shows timing diagrams which illustrate signal/time relationships during read, write, step-in and step-out operations. Figure 5-2 is the printed-circuit board schematics and Figure 5-3 contains the assembly drawing and parts list.

Table 5-1. PWA Configurator

OPTION CHART HPC 77618xxx	006	017	049
WRITE PROTECT (INH WRT)	X	X	X
UNIT SELECT (LOW)	X	X	X
READY	X	X	X
DOOR UNLOCK (WITH POWER)	X	X	X
WRITE FAULT	X	X	X
INDEX SINGLE SIDED	X	X	X
EXTERNAL ERASE ENABLE	X	X	X
ACTIVITY LED (DOOR IS LOCKED)	X	X	X
INTERFACE CONNECTOR TYPE	A	A	A

XX246a

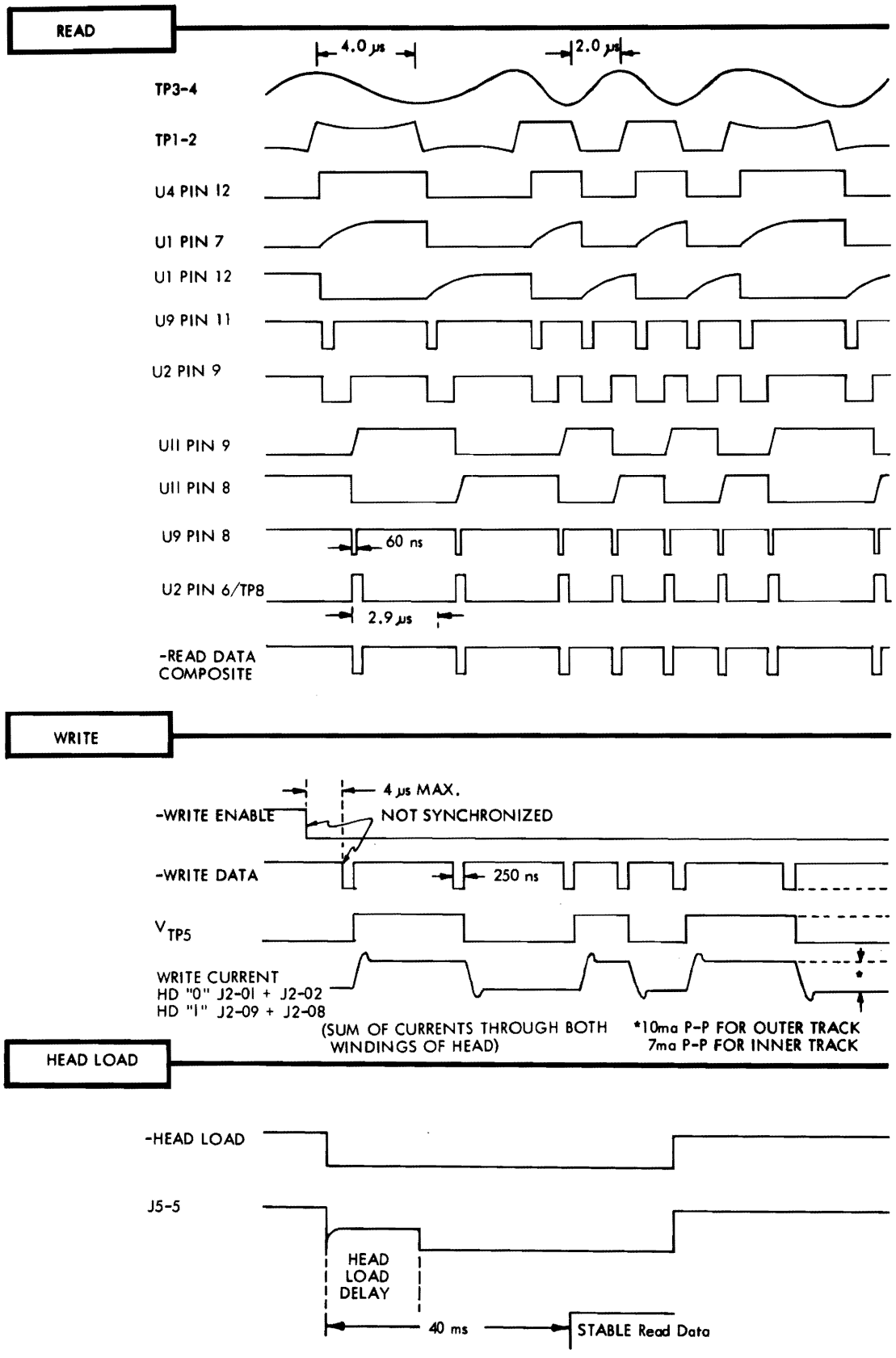

XX120a

Figure 5-1a. Timing (Sheet 1 of 2)

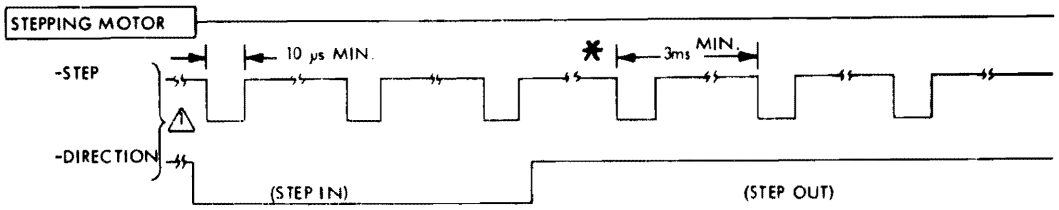

*Change in direction time = settling time = 20 ms

X258a

Figure 5-1b. Step/Direction Operation

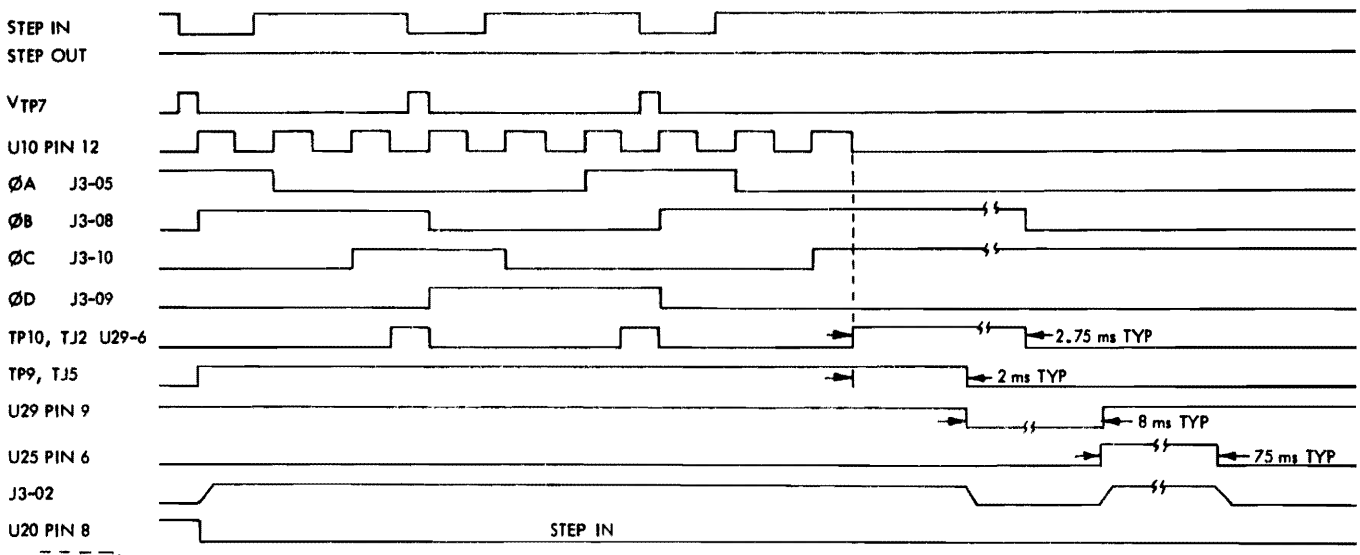

XX183a

Figure 5-1c. Step-In Operation

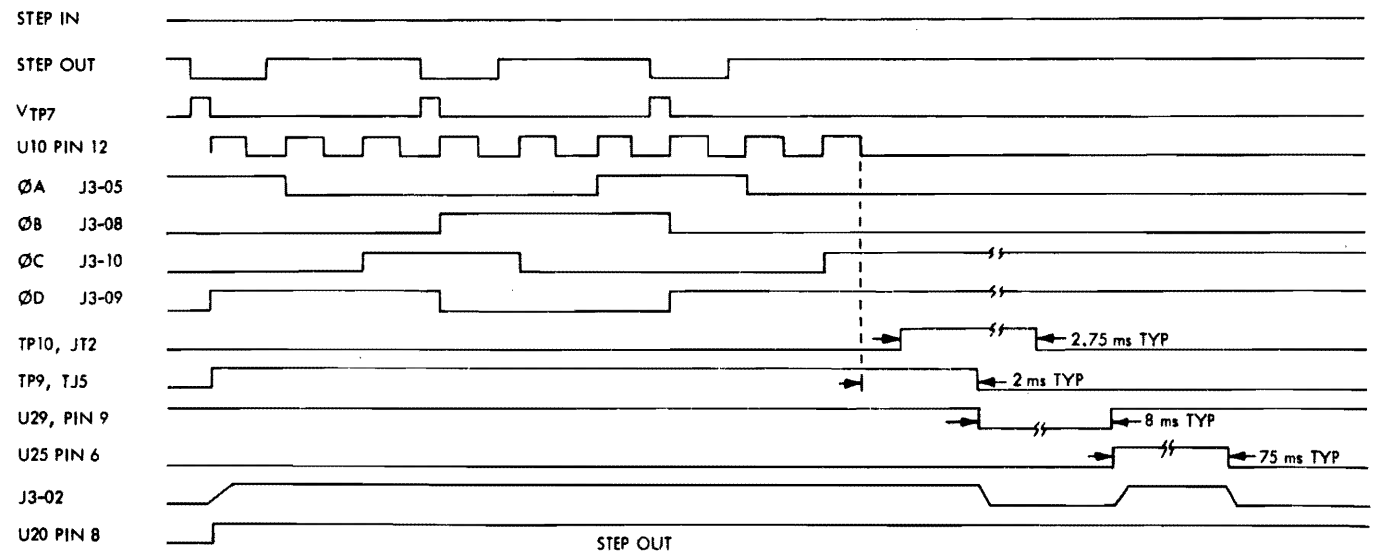

XX183b

Figure 5-1d. Step-Out Operation (Sheet 2 of 2)

J1 PIN CONFIGURATION AND ASSEMBLY USAGE					
FUNCTION NAME	77618919	77615652			
-DIRECTION	14	14			
DISK TYPE	50	50			
-DOOR UNLOCK-1	42	42			
-DOOR UNLOCK-2	48	48			
-ERASE ENABLE	38	38			
-HEAD LOAD	04	04			
HEAD SELECT	40	40			
-INDEX	08	08			
-LOW CURRENT	10	10			
-READ DATA COMPOSITE	02	02			
-READY-1	28	28			
-READY-2	30	30			
-READY-3	32	32			
-READY-4	34	34			
-STEP	12	12			
-TRACK 00	06	06			
-UNIT SELECT-1	20	20			
-UNIT SELECT-2	22	22			
-UNIT SELECT-3	24	24			
-UNIT SELECT-4	26	26			
-WRITE DATA	18	18			
-WRITE ENABLE	16	16			
-WRITE FAULT	44	44			
-WRITE FAULT RESET	46	46			
-WRITE PROTECT	36	36			
GROUND	1-49 & 49 ODD NO. ONLY	1-49 & 49 ODD NO. ONLY			

XX255a

JUMPER CONFIGURATION																								
ASSEMBLY NO.	W1	W2	W3	W4	W5	W6	W7	W8	W9	W10	W11	W12	W13	W14	W15	W16	W17	W18	W19	W20	W21	W22	W23	W24	W25
77618919			X		X			X			X			X	X	X		X			X				X
77615651		X			X	X		X		X	X					X		X		X			X		X
	W26	W27	W28	W29	W30	W31	W32	W33	W34	W35	W36	W37	W38	W39	W40	W41	W42	W43							
77618919							X		X																
77615651	X	X					X						X		X			X							

Figure 5-2. Schematic (Sheet 1 of 7)

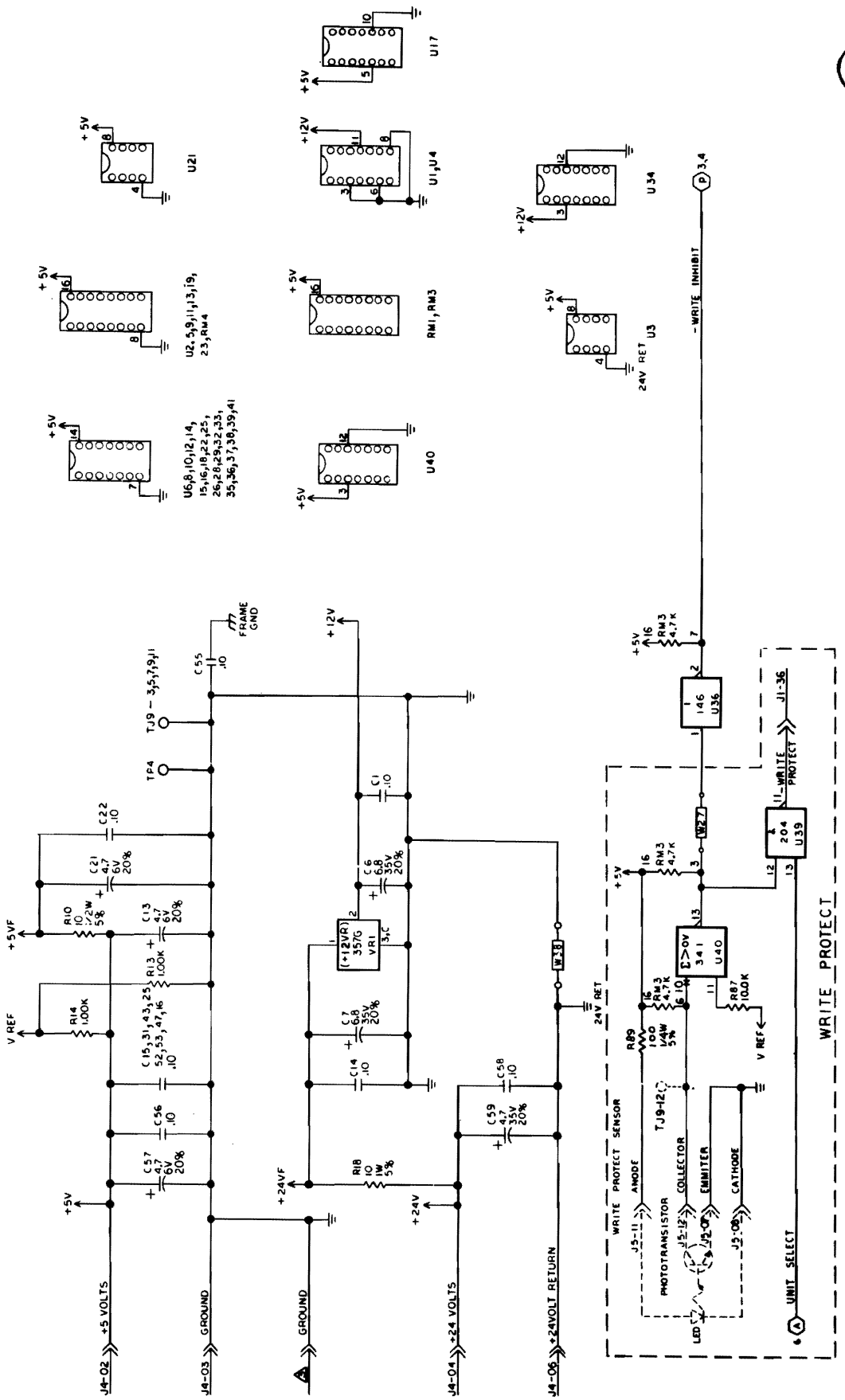

Figure 5-2. Schematics (Sheet 2 of 7)

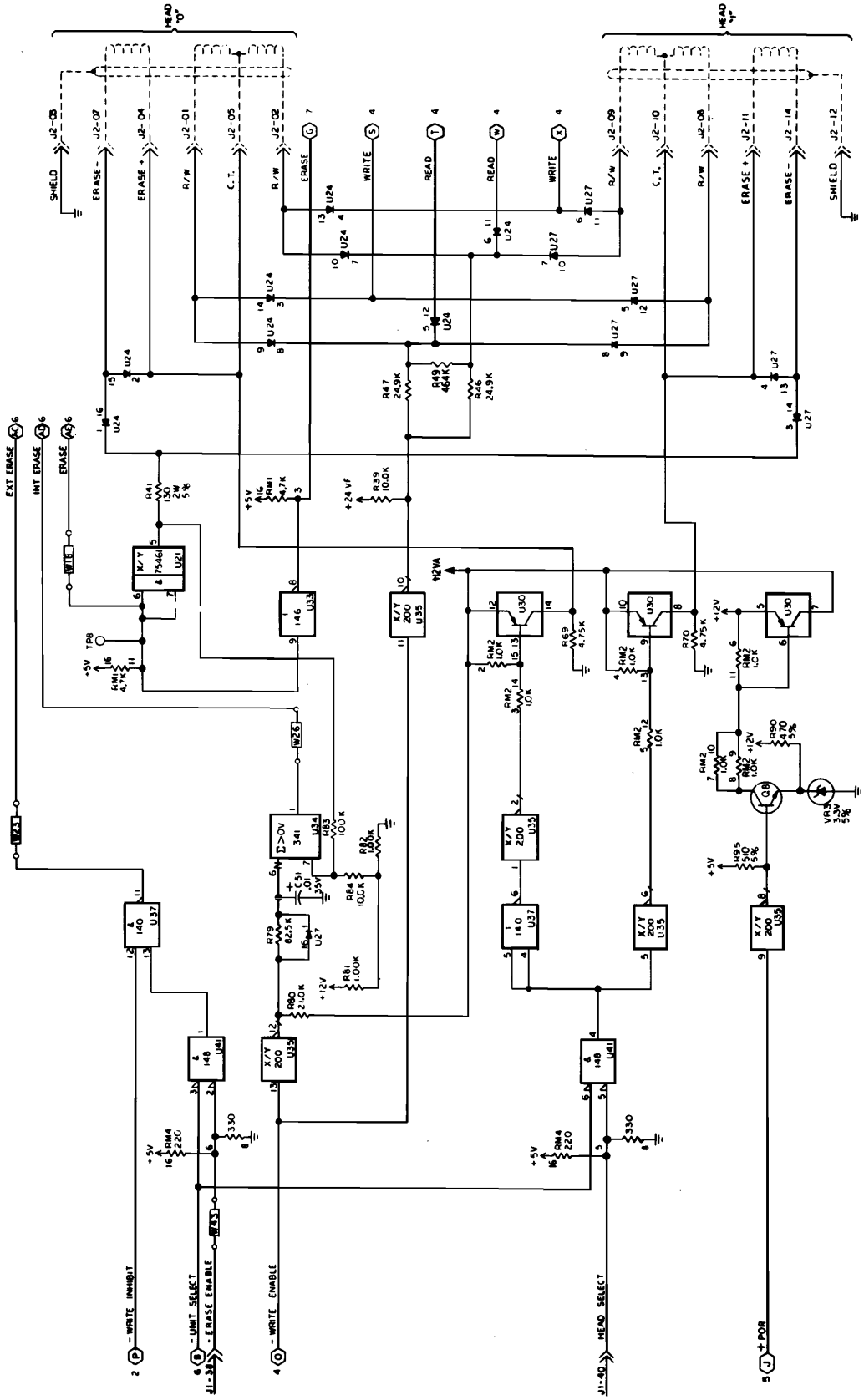

Figure 5-2. Schematics (Sheet 3 of 7)

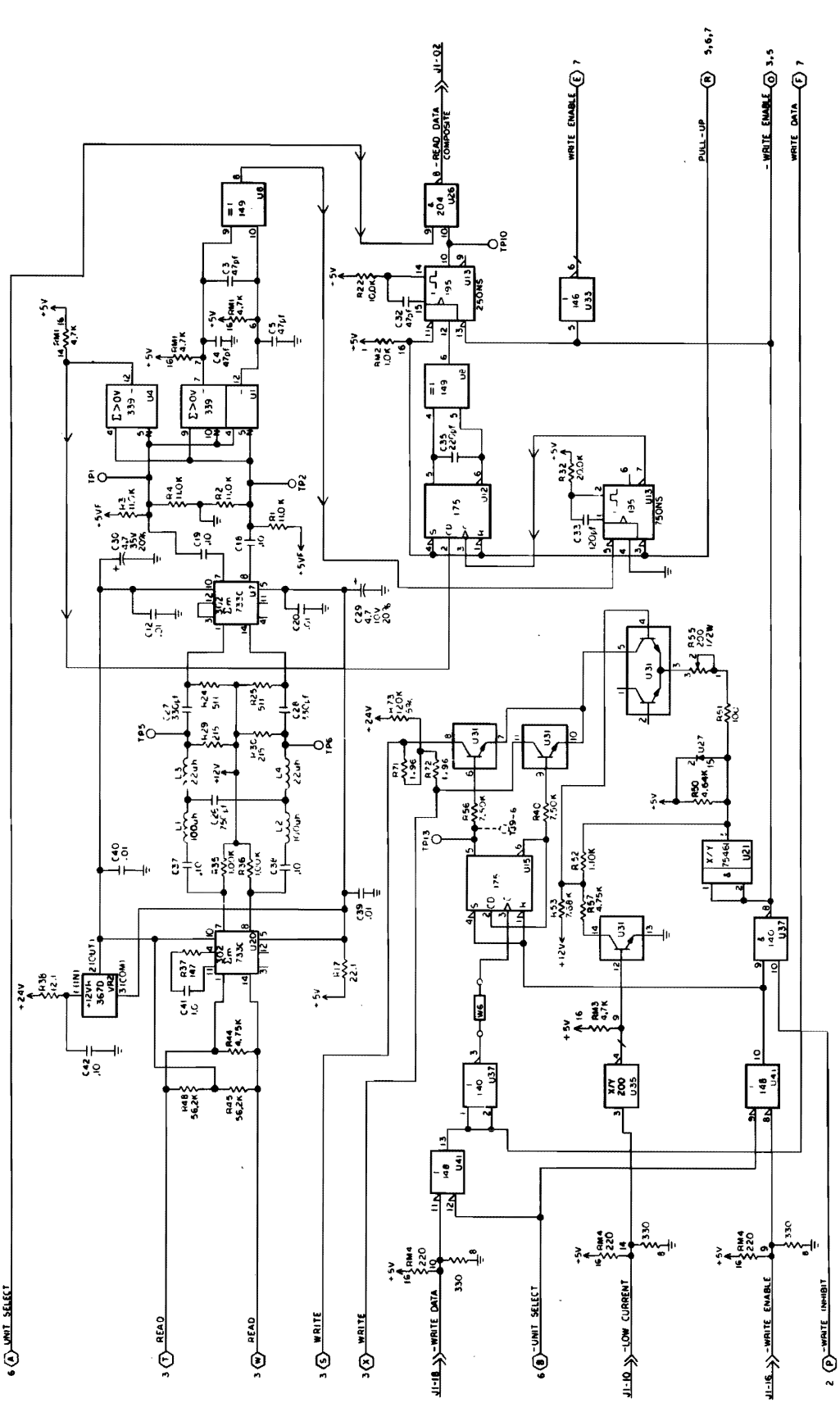

Figure 5-2. Schematics (Sheet 4 of 7)

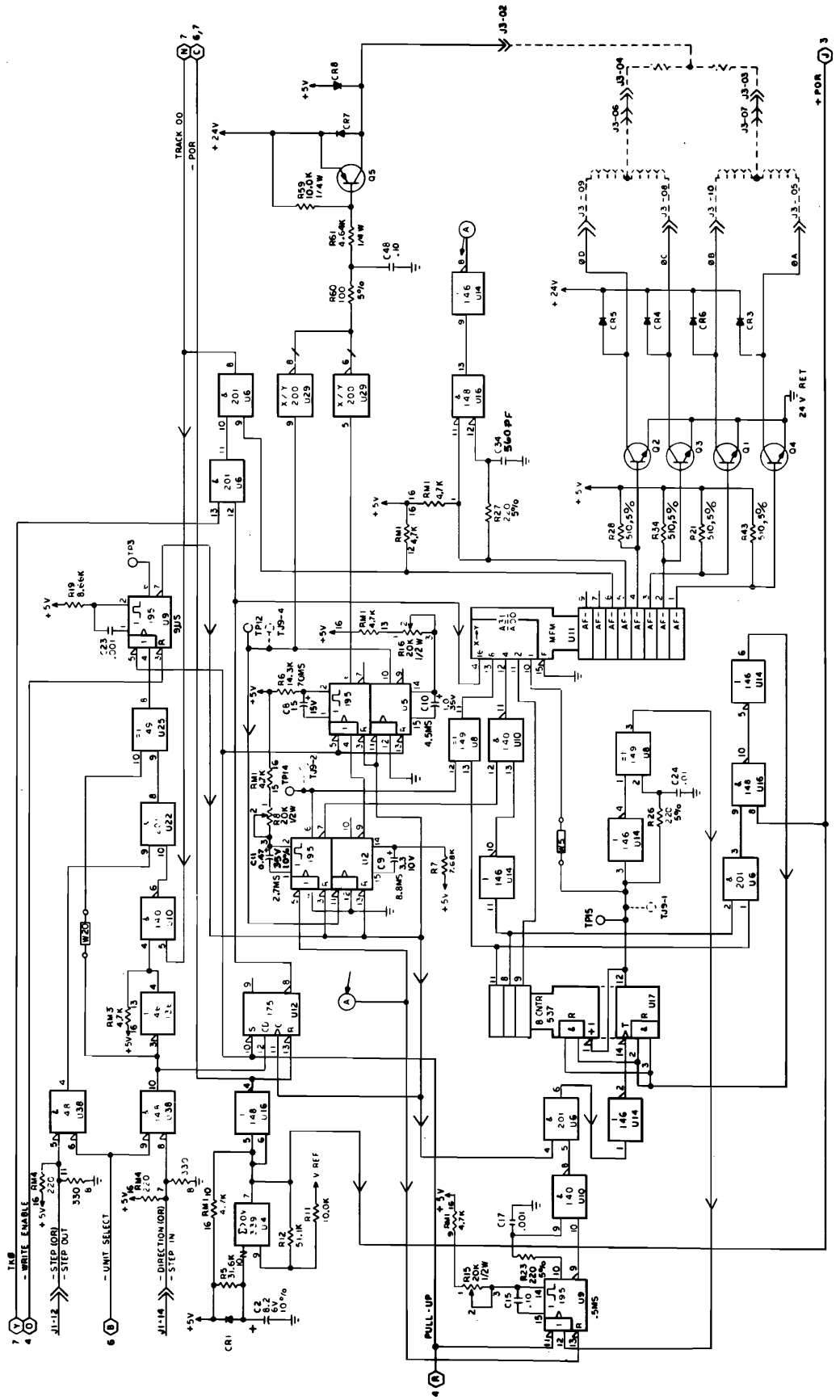

Figure 5-2. Schematics (Sheet 5 of 7)

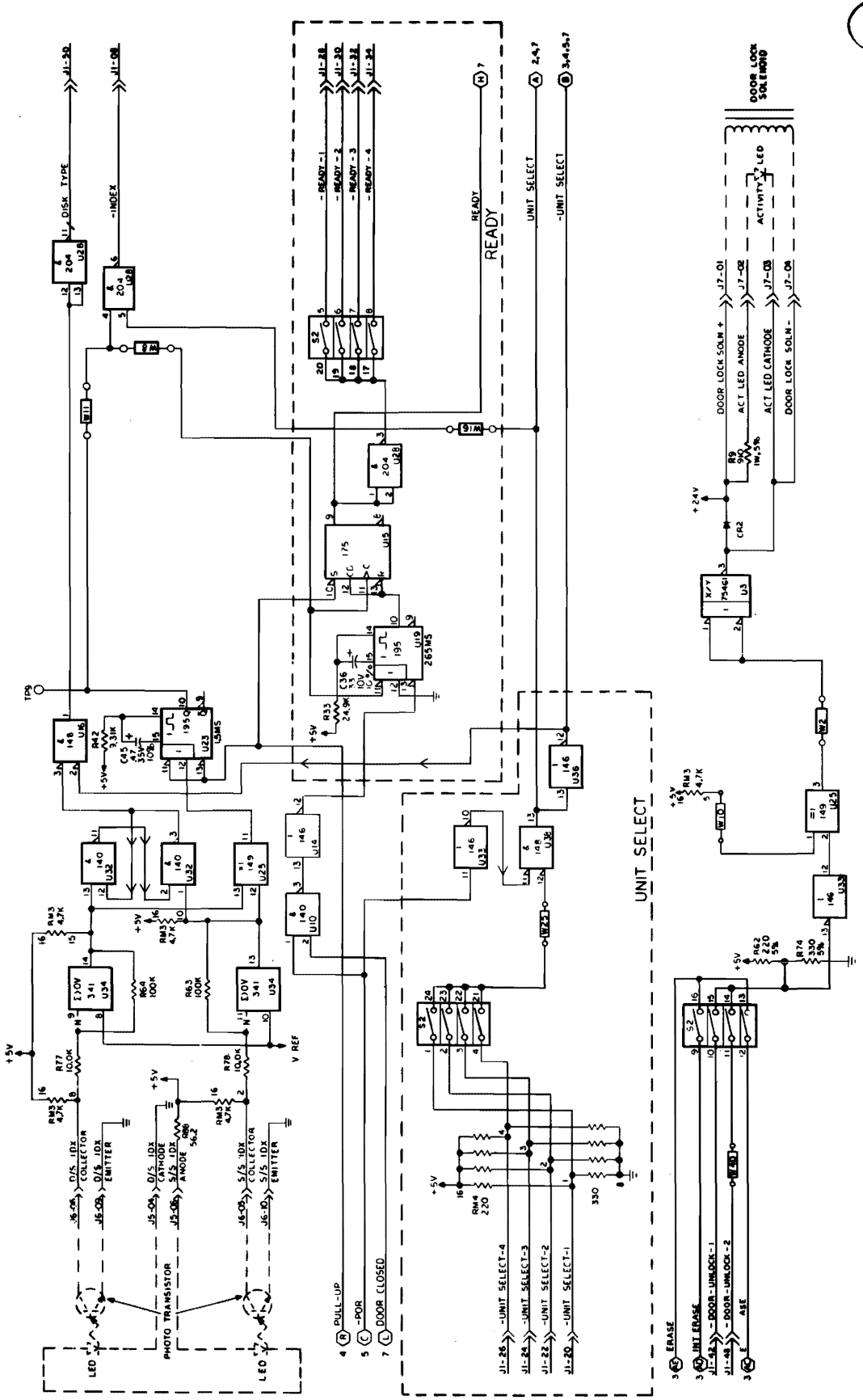

Figure 5-2. Schematics (Sheet 6 of 7)

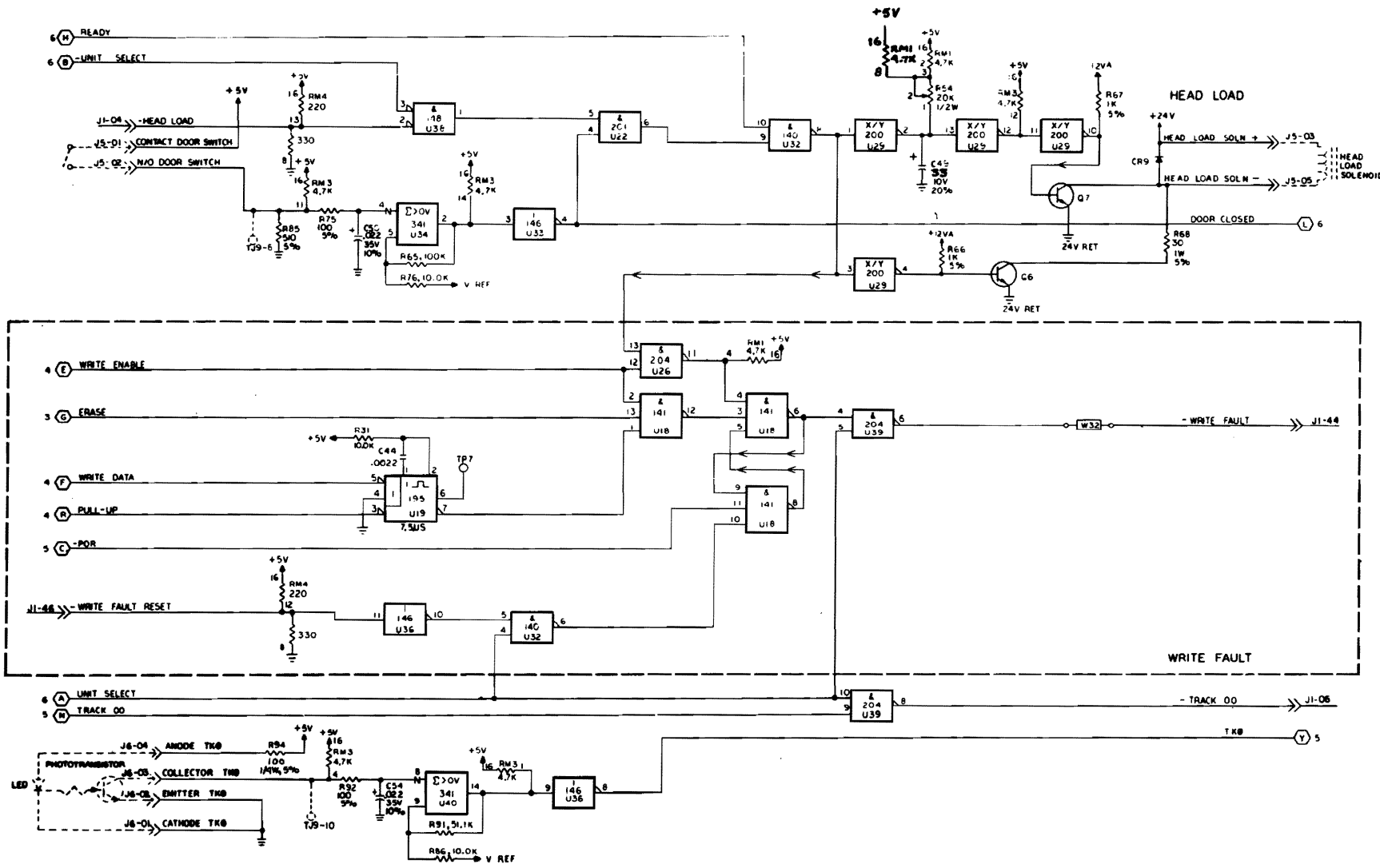

Figure 5-2. Schematics (Sheet 7 of 7)

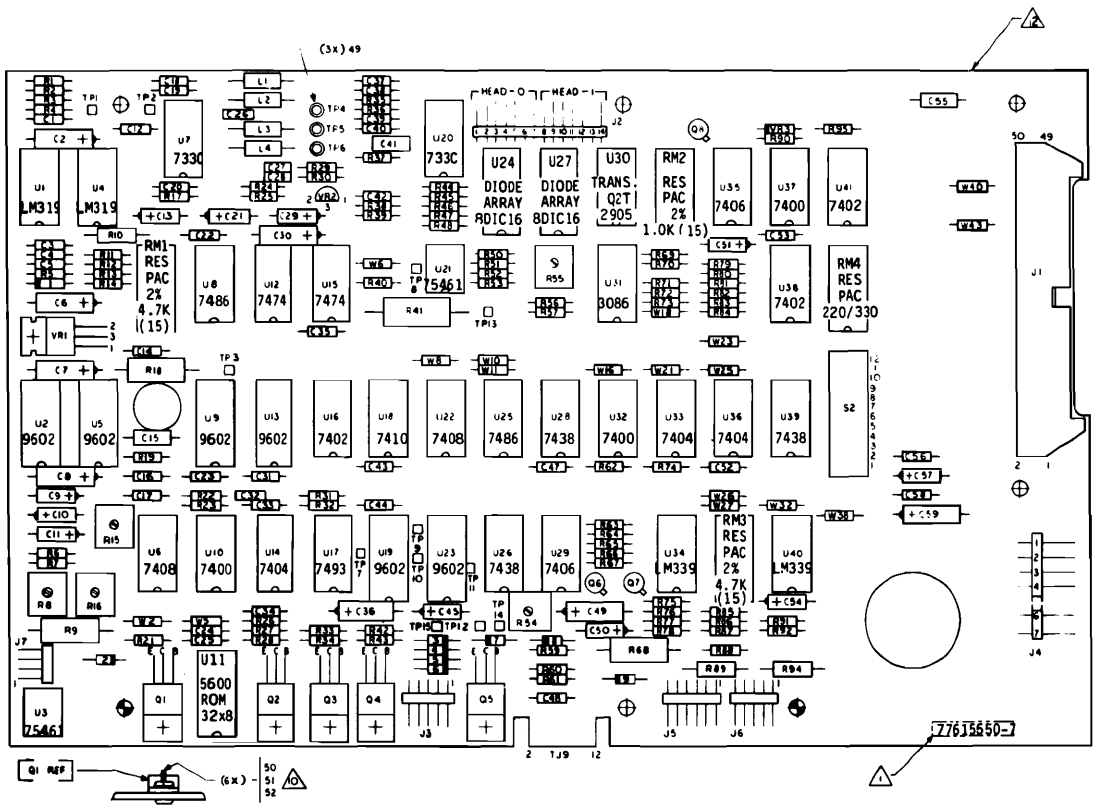

TRANSISTORS: Q1, Q2, Q3, Q4 - T1P120
Q5 - T1P125
Q6, Q7, Q8 - 2N2222A

DIODES: CR1 - 1N914A
CR2, CR9 - SILICON
CR3, CR4, CR5, CR7, CR7, CR8 - 1N4001

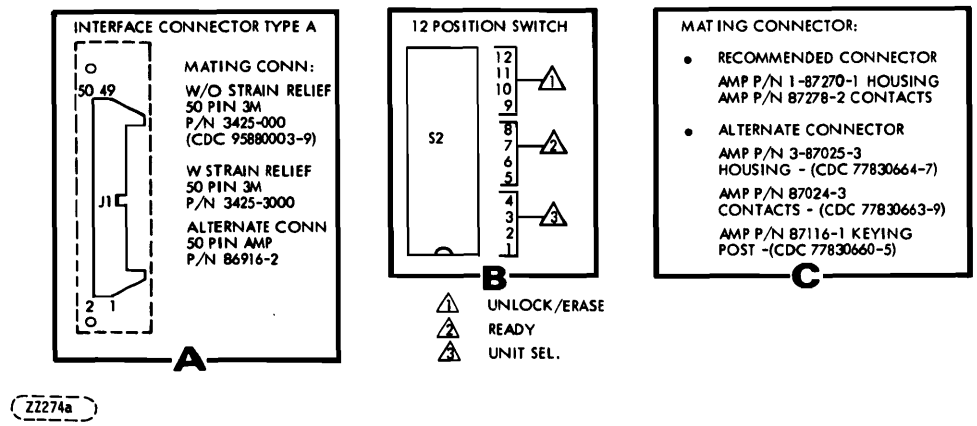

Figure 5-3. Assembly

MAINTENANCE

6.1 INTRODUCTION

This section contains the instructions required to maintain the FDD. The information is provided in the form of preventive maintenance, troubleshooting and corrective maintenance.

6.2 MAINTENANCE TOOLS

The Special tools (or equivalent) required to maintain an FDD are as follows:

DESCRIPTION	CDC MODEL NO.
Alignment Diskette (Single-Side, Optional)	421-51W
Alignment Diskette (Two-Sided)	425-51W

6.3 TROUBLESHOOTING

An improperly adjusted FDD may exhibit symptoms of one that has a malfunction; therefore, the Adjustment Procedures (paragraph 6.4) should be performed before assuming that the unit has failed. Before troubleshooting is started, check all DC supply voltages.

6.3.1 DC VOLTAGE AND SIGNAL CHECK

a. Input power should be +5VDC ±5% and +24VDC ±10% measured at the input to the FDD (refer to paragraph 3.4.2).

b. Test Points: The signals at the test points should conform to the various diagrams and waveforms as listed in Table 6-1.

c. Signals should conform to Figure 5-1 and Figure 6-1 through 6-4.

Table 6-1. Test Points

Test Point No.	Refer to Fig. No.	Comments
1	5-1	Differentiated Analog
2	5-1	Read Data (Differential)
3	5-1, 6-2, 6-3	Analog Read Data
4	5-1, 6-2, 6-3	(Differential)
5	5-1, 6-4	Write flip flop
6	- - -	Not for Field Use*
7	5-1	Stepper One-Shot
8	5-1	+Composite Read Data
9	5-1	Stepper Steering Logic
10	5-1	Stepper Steering Logic
11	- - -	Not for Field Use**
12	- - -	Not Used
14	5-1	Index/Sector
15		Ground

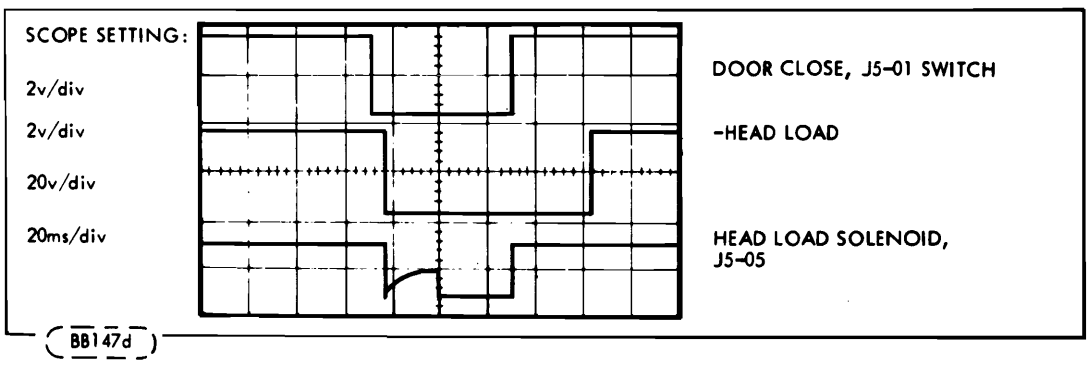

Figure 6-1. -Head-Load and Door-Close Switch

*Erase current should be 80mA typically into J2-03 when the FDD is Write-Enabled.

**A Write Fault should occur when the FDD is Write-Enabled and no Write Data is sent.

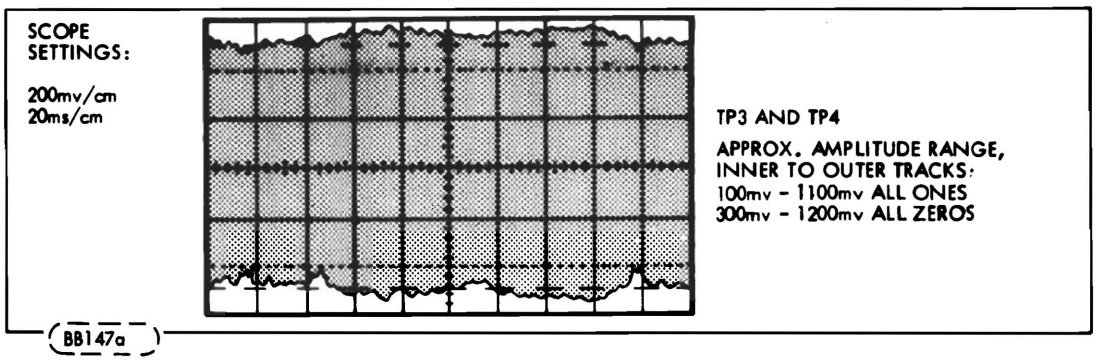

Figure 6-2. Differential Read Signal for Entire Track

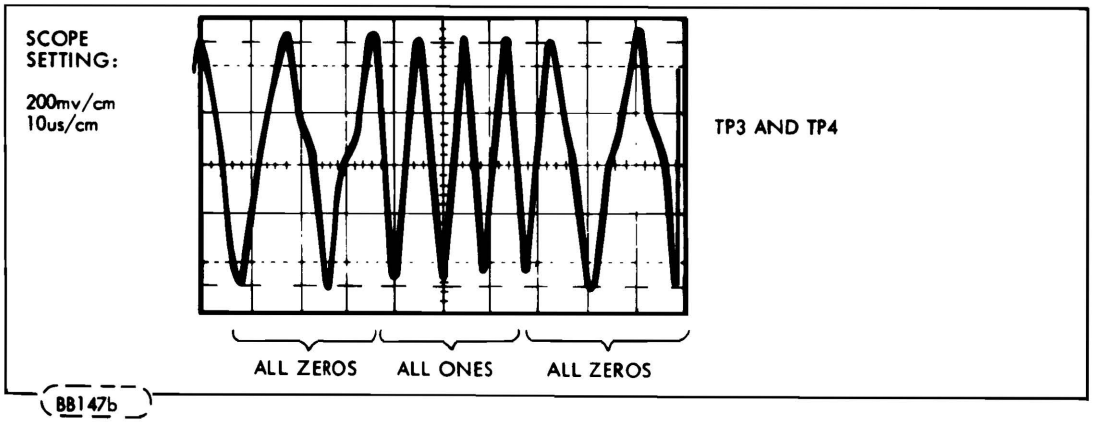

Figure 6-3. Differential Read Signal for Portion of Outer Track

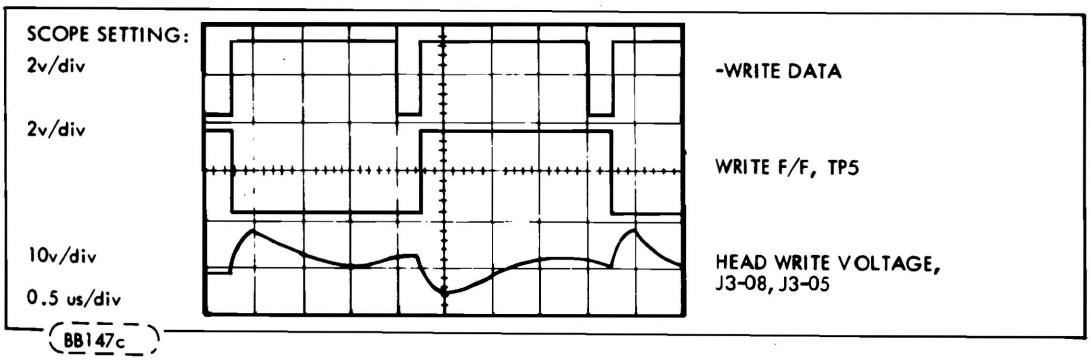

Figure 6-4. Write Data, Write F/F Output, and Head Write Voltage for Outer Track

6.4 ADJUSTMENT PROCEDURES

6.4.1 WRITE-SPLICE CHECK AND ADJUSTMENT

Alignment Diskettes 421-51W and 425-51W are used to perform this procedure.

a. Precondition the alignment diskette by allowing it to reach room temperature for one hour.

b. Install the alignment diskette.

CAUTION

The Alignment Diskette is for read only. Extreme caution should be used to assure this diskette is not written on.

c. Seek to Track 00, then seek to Track 01 and Read on head 0. (No data is recorded on Track 1.)

d. Connect Channel 2 of scope to TP3 on the PWA, Channel 1 to Index TP14 of the PWA. Set up the scope as follows:

Chan 2 Volt/Div to:	0.1 volt/div		
Chan 1 Volt/Div to:	2 volt/div		
Chan 2 voltage to:	AC		
Chan 1 voltage to:	DC		
Vert. Mode to:	Add	Trig. Mode to:	Channel 1
Slope (Sync) to:	Pos.	Time Base to:	50 µs/div

e. Adjust the time of the write-splice bit until it measures per Table 6-3. Refer to Figure 6-5a to adjust the time, loosen the single-sided sensor set screw holding the (single-sided-sensor) phototransistor located on the bottom of the chassis toward the front of the unit, (Figure 6-5b). Using the adjustment tab protruding through the casting, move the phototransistor until the specification is met. Tighten the set screw while observing the scope signal. Verify that the adjustment did not change.

f. All scope settings are to remain as defined in the original setup in Step d, but it may be necessary to slightly adjust the sync. Seek to Track 00 then seek to Track 01 and perform a read. While observing the signal on the scope, remove and reinsert the diskette three times.

After each insertion, verify that the change in the time from Index to write splice is less than 50 µs.

Repeat Steps b through f using Alignment Diskette 425-51W for the two-sided sensor adjustment tab and its associated set screw, as required.

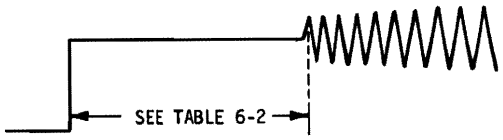

ZZ164a

Figure 6-5a. Write-Splice-Timing

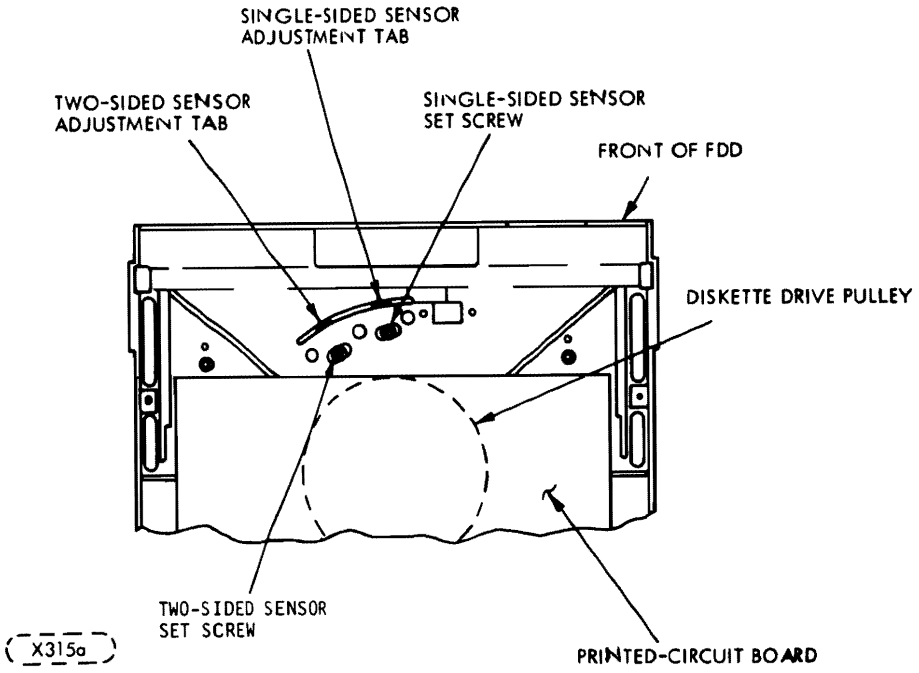

X315a

Figure 6-5b. Single- and Two-Sided Sensor Adjustment Means

Table 6-2. Write-Splice Adjustment

HPC. REF. NO.	WRITE SPLICE ADJ. (µs)
77618006 77618017	200 ± 100 200 ± 100

6.4.2 ACTUATOR ALIGNMENT

a. The alignment diskette shall be preconditioned by allowing it to reach room temperature for one hour.

b. Install the alignment diskette.

CAUTION

The alignment diskette is for read only. Extreme caution should be used to assure this diskette is not written on.

c. Step to Track 38 (00100110) and perform a read on head 0. (No data is recorded on Track 38. The tester or system requirements should be noted; refer to tester or system instructions for operation).

d. Connect Channel 1 of scope to TP3 on the PWA and Channel 2 to TP4 on the PWA.

e. Connect the external sync probe to index at TP14 on PWA.

f. Set up the scope as follows:

Channel 1: volts/div to: 0.1 volts/div
Channel 2: volts/div to: 0.1 volts/div (inverted)
Channel 1: input to: AC
Channel 2: inputs to: AC

Vertical Mode to: Add
Slope (Sync) to: Positive
Trigger Source to: External
Trigger Coupling to: Low Frequence (High Frequency Reject)
Trigger Mode to: Normal
Time Base to: 20 ms/div

NOTE

Scope trace after trigger level is adjusted for repetitive trace should display an envelope of data "Cateyes" consisting of two lobes (refer to Figure 6-6).

g. Change the volts/div of Channel 1 and Channel 2 to 0.02 volts/div. For an acceptable aligned unit, the voltage ratio of the smaller lobe to the larger lobe should exceed 80%.

h. If not in alignment, loosen the stepper-motor-adapter mounting screws and slowly rotate the stepper motor until the amplitude of both lobes is the same. Small increments of motion can be easily achieved by placing the blade of a flat-blade screwdriver against the adapter wall at the locations shown in Figure 6-11 and then tapping lightly on the screwdriver handle.

CAUTION

Do not tap against the motor!

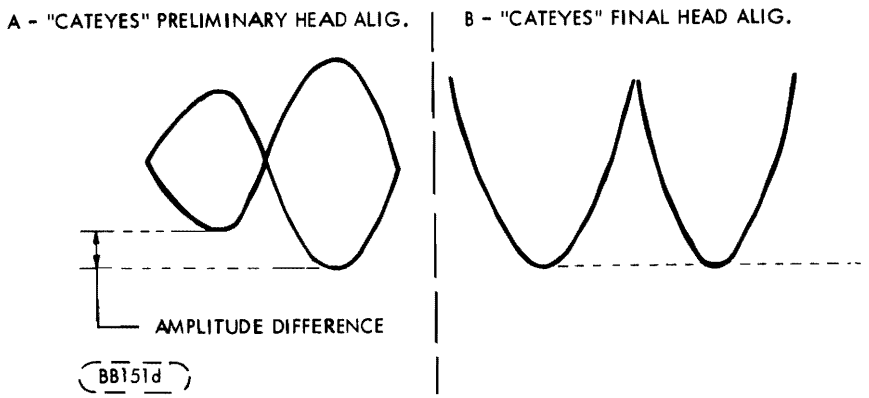

Figure 6-6. Head-Alignment Amplitude

i. Tighten the stepper-motor-adapter screws. Return to Track 00, then seek back to Track 38. Verify the specification is still met. If the specification is not met, readjust the stepper motor, return to zero and seek back to Track 38. Repeat the adjustment until the specification is met.

j. Remove alignment diskette.

k. Perform Track 00 adjustment, paragraph 6.4.4.

6.4.3 CLAMSHELL-CLOSED SWITCH ADJUSTMENT

Close the clamshell and check that it is latched. Turn the setscrew clockwise until the switch makes contact. Turn the setscrew one additional turn and a half. Open and close the clamshell several times while observing the door-closed signal.

6.4.4 TRACK 00 OPTICAL SENSOR ADJUSTMENT

Adjust the Track 00 optical sensor for the output in Figure 6-7 while the FDD alternately seeks at 3 ms ±0.1 ms per step between Track 00 and Track 03.

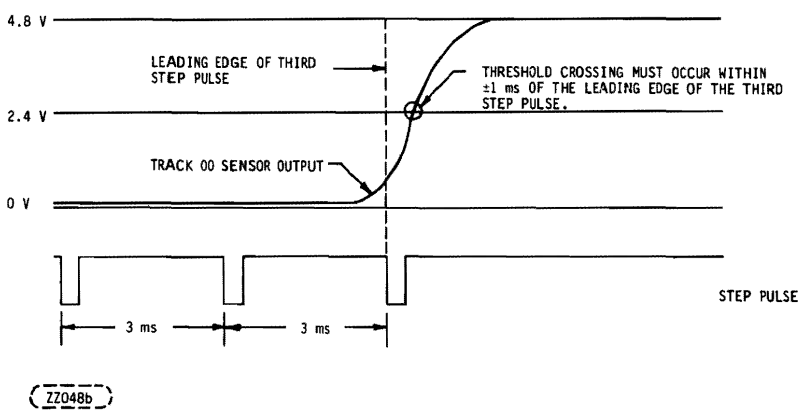

Figure 6-7. Track 00 Optical Sensor Output

6.4.5 DISKETTE EJECTOR

Insert a diskette fully and note a clicking noise as the ejector engages a pin on the clamshell.

While observing the ejector, latch and latch block (Figure 6-8 through the 1/2 in. (12.7 mm) hole in the sidewall, close the clamshell. Note that closing the clamshell moved the ejector further to the rear allowing the latch to rotate counterclockwise until the tip drops over the step in the latch block.

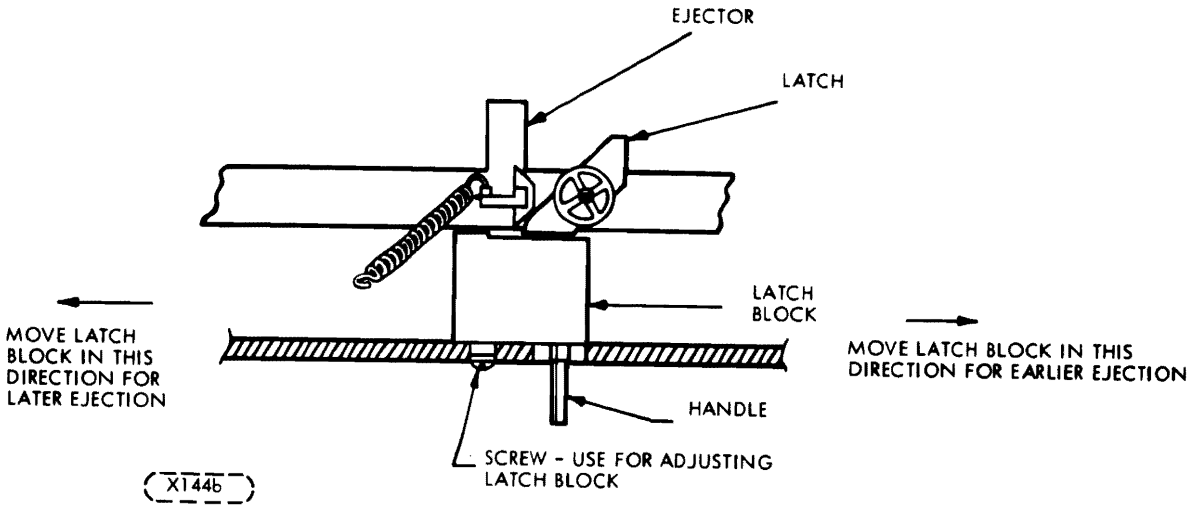

Figure 6-8. Ejector, Latch and Latch Block

With the clamshell closed, adjust the latch block (Figure 6-8) so the tip of the latch just clears the step.

Check by opening the clamshell slowly and observing the clamshell position when the diskette is ejected. To avoid damage, it is to be ejected when the clamshell is 1/4 in. (6.35 mm) max. from the fully opened position. If further adjustment is required, move the latch block as indicated by the arrows and instruction in Figure 6-8.

Operate several times and observe that the diskette ejection is within the 1/4 in. (6.35 mm) max. described above.

6.4.6 DISKETTE-LOAD-PAD ADJUSTMENT

a. Refer to Figure 6-9.

b. Energize Solenoid

c. Loosen Solenoid mounting screws (2x).

d. Move solenoid down on bracket to obtain a clearance of 0.010 to 0.015 in. (0.254 to 0.381 mm) between the load plate and the lift extension of the upper-head arm at the location of minimum clearance. Move the carriage through its full travel manually to determine the location of minimum clearance.

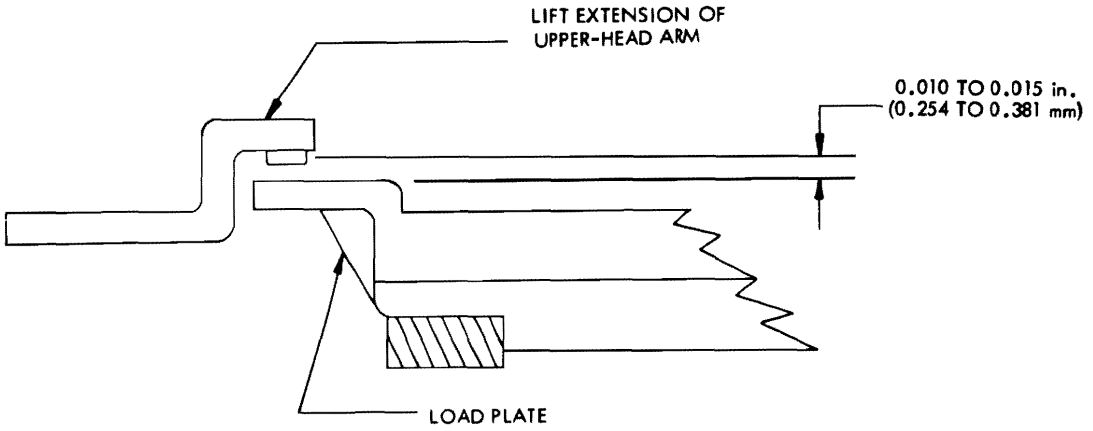

X267a

Figure 6-9. Load Pad Adjustment

6.4.7 HEAD-UNLOAD CLEARANCE

Adjust set screw on clamshell for 0.100 in. to 0.125 in. (2.54 to 3.175 mm) clearance per Figure 6-10 between flyer pads with head-load solenoid de-energized and clamshell closed.

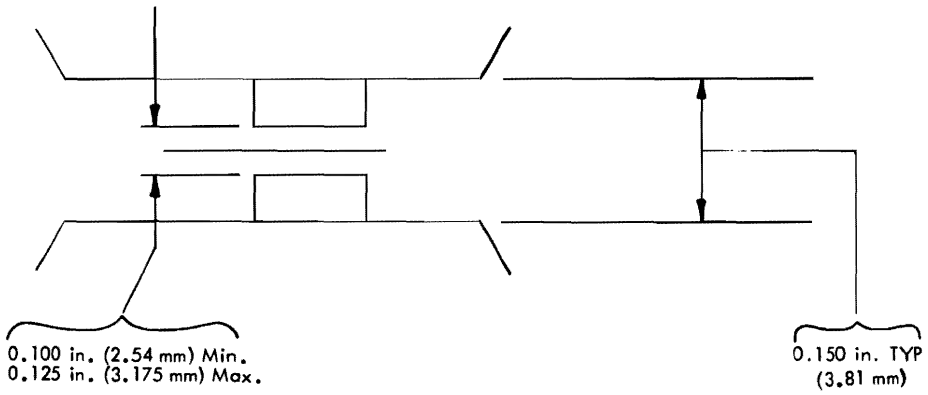

X267d

FIGURE 6-10. HEAD UNLOAD CLEARANCE
AS VIEWED FROM THE FRONT OF THE CARRIAGE

CAUTION

Do not use gauge for this adjustment. Estimate spacing by viewing with an inspection mirror.

6.4.8 BAND ALIGNMENT

Referring to Figure 6-12:

a. Attach band to carriage.
b. Loosen clamp screws on pulley, access through adapter slot.
c. Tension band and tighten idler mounting plate.
d. Move carriage by hand (full travel) several times to allow band to align.
e. Tighten pulley clamp screws.

f. Move carriage to check band alignment. Check for band kink near carriage mount over full range of carriage traverse.
g. Repeat procedure to eliminate kinking.
h. Perform 6.4.2.

CAUTION

Band edge is sharp.

6.4.9 AZIMUTH ADJUSTMENT

Using an alignment diskette, seek to Track 76 and adjust azimuth by turning the azimuth set screw in the guide-rod boss. The set screw should be adjusted in such a way that the azimuth pattern is optimized between head "0" and "1". See Figure 6-10.1 for optimum azimuth alignment.

The azimuth of both heads must be less than ±12 minutes from nominal.

6.5 REMOVAL AND REPLACEMENT PROCEDURES

The following procedures give the proper sequence for removal and replacement of major assemblies. To avoid damage to parts, the procedure must be performed in sequence.

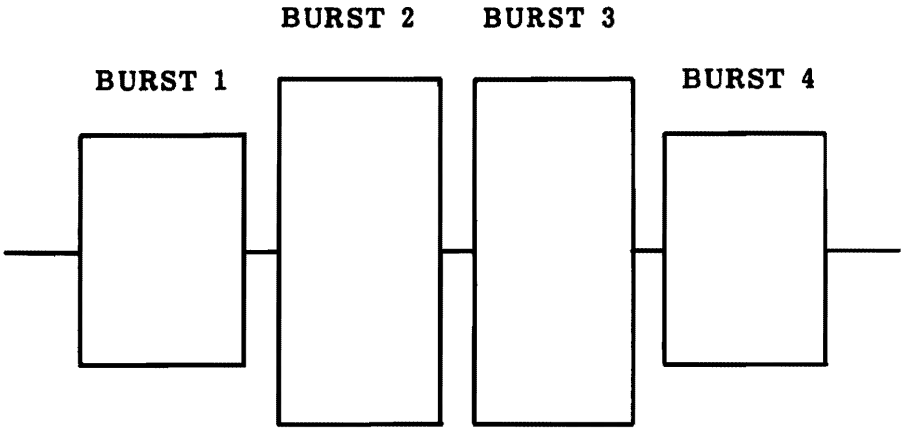

Depicts an optimum alignment of zero minutes of azimuth error. Note that bursts 1 and 4 are of equal amplitude, and 2 and 3 are of equal amplitude.

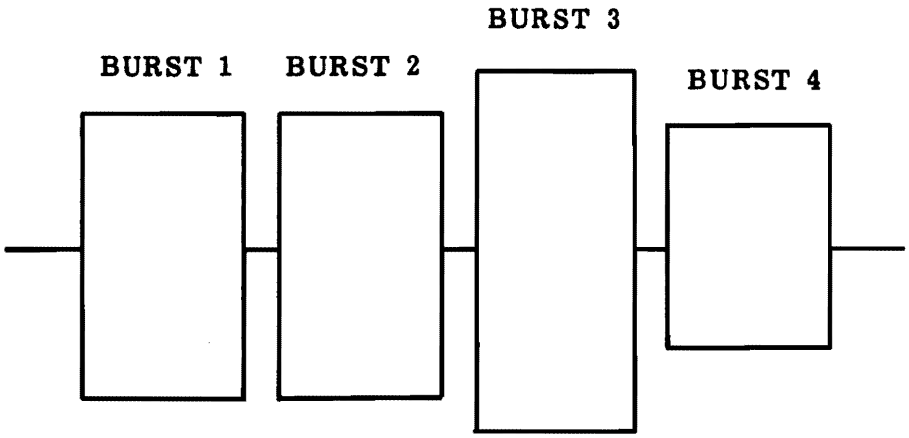

Depicts an alignment of exactly -12 minutes of azimuth error. Note that bursts 1 and 2 are of equal amplitude.

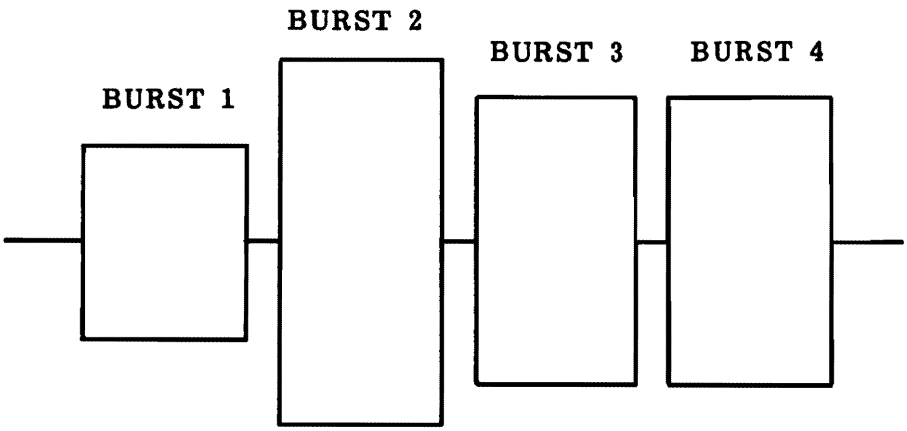

Depicts an alignment of exactly +12 minutes of azimuth error. Note that bursts 3 and 4 are of equal amplitude.

6.5.1 PRINTED-CIRCUIT BOARD (PWA)

a. Disconnect I/O Cable from J1 (refer to Figure 5-3).
b. Disconnect harnesses from connectors on printed-circuit board.
c. Remove two screws from printed-circuit board adjacent to connector J1.
d. Remove PWA by detaching it from the four push-in clips.
e. To replace printed-circuit board, push clips through printed-circuit board.
f. Replace two screws adjacent to connector J1.
g. Reconnect harness and I/O cable.
h. Set dipswitch S1/S2.
i. Perform write-splice check and adjust as necessary (par. 6.4.1).

6.5.2 HEAD REPLACEMENT

Referring to Figures 6-11 and 6-12.

a. Remove clamshell;
b. Disconnect head cables;
c. Loosen tension on idler;
d. Remove band retainer from carriage;
e. Remove band from carriage;

CAUTION

Band has sharp edges; don't kink or bend.

f. Remove cable guide;
g. Remove cable clamp;
h. Lift ejector mechanism to remove head cables from channel;
i. Remove clamp screws from carriage guide bar;
j. Slide carriage to rear to clear idler assembly and remove. Care must be taken to prevent head assemblies from snapping together.
k. Remove guide bar from carriage;
l. Reverse procedure to install new carriage. Care must be taken to get swing-arm lift tab above head-load plate.
m. Tighten screws on guide rod;
n. Route cable through ejector channel and install cable wire guide;
o. Thread cables through chassis and connect to circuit board;
p. Install cable clamp; go to 6.4.8, Band Alignment, and perform Steps a through h;
q. Install clamshell;
r. Perform 6.4.1 through 6.4.7 and 6.4.9.

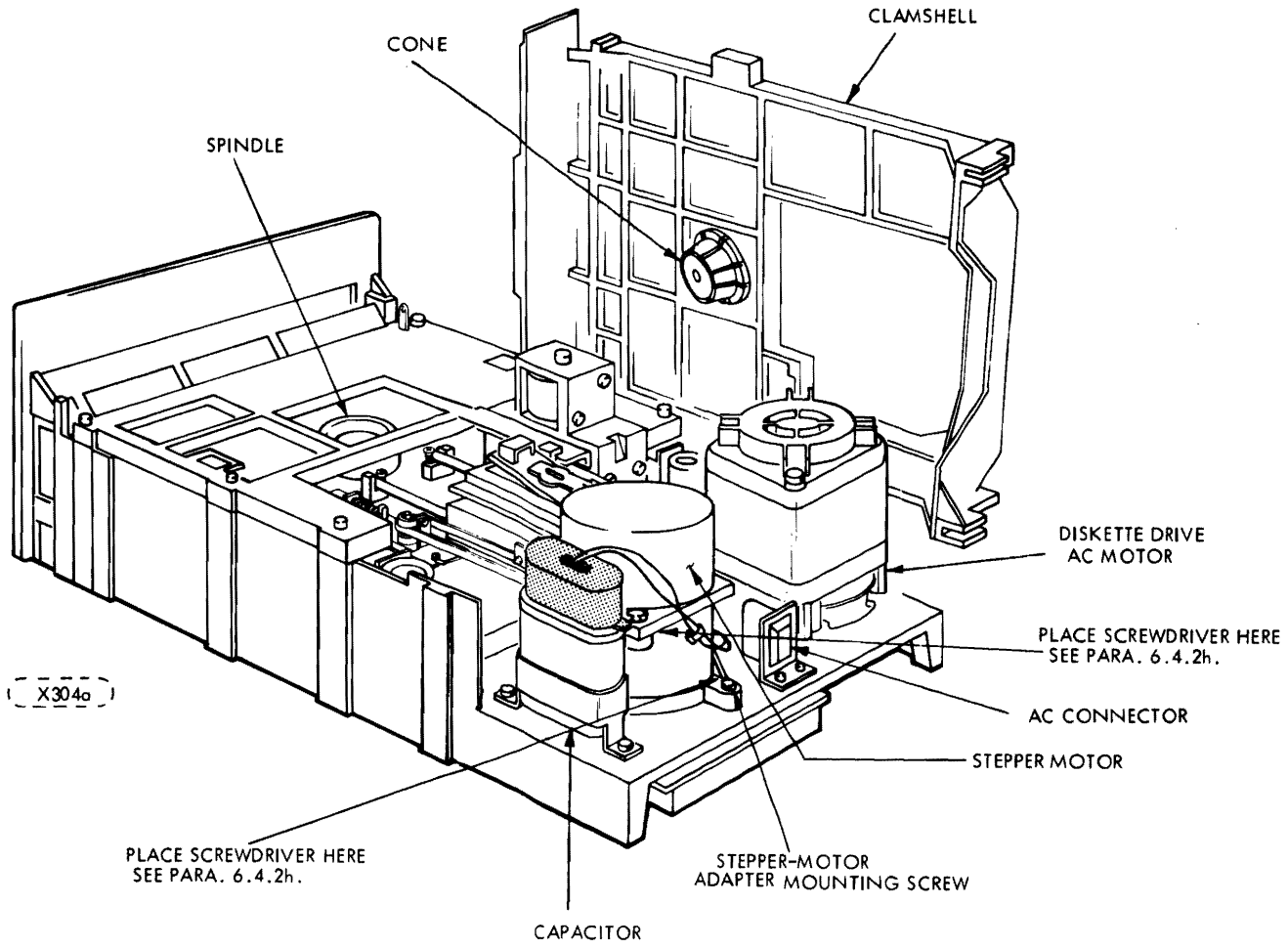

Figure 6-11. Positioning and Head-Load Mechanism, Clamshell Cover Raised

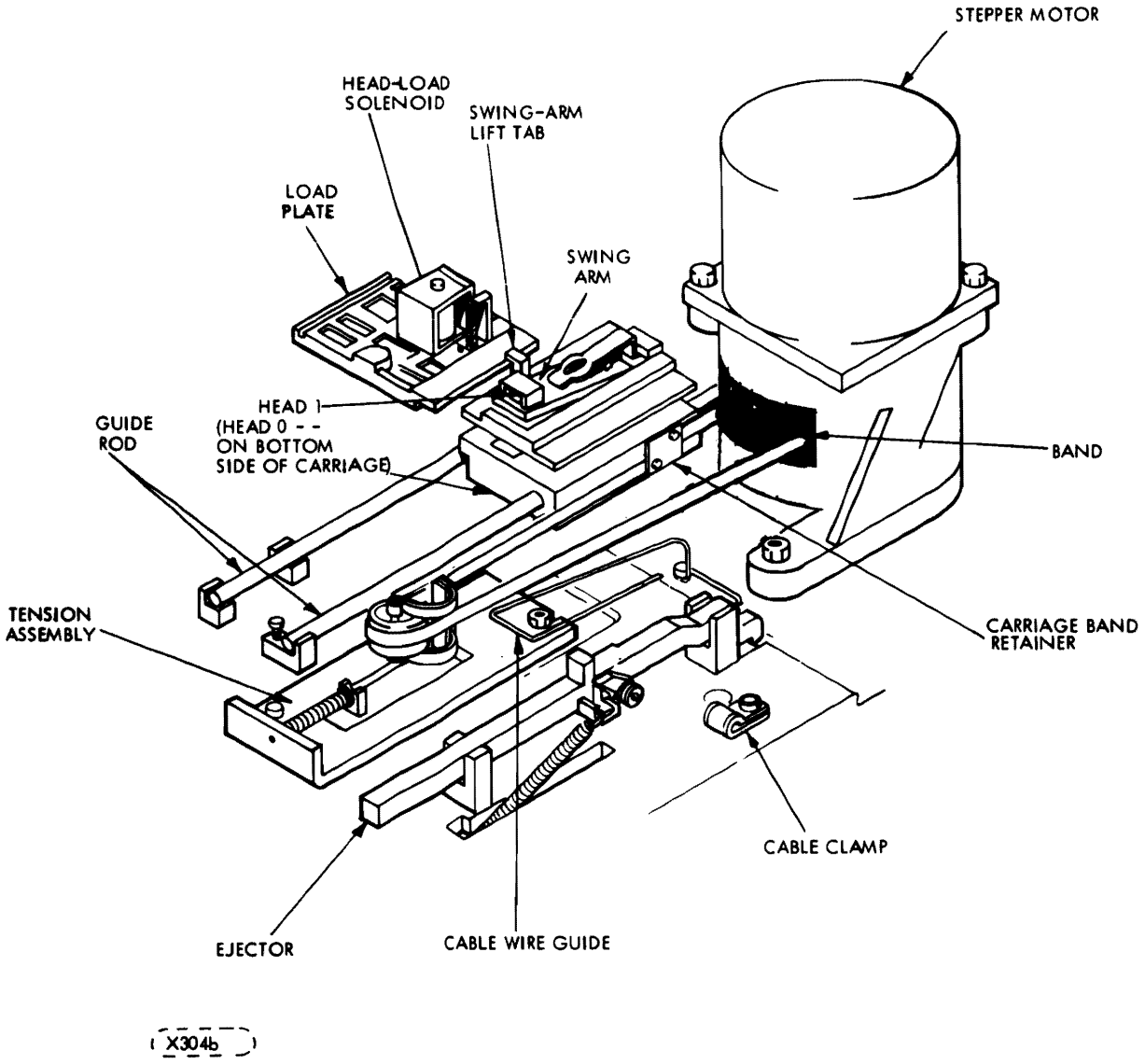

Figure 6-12. Head-Load Carriage and Stepper Motor Details.

6.5.3 DRIVE MOTOR ASSEMBLY

a. Perform removal procedure for printed-circuit board (paragraph 6.5.1).
b. Remove screws securing drive-motor cable clamps.
c. Remove AC connector from bracket.
d. Remove spindle drive belt.
e. Remove three (3) nuts securing drive motor.
f. Remove drive-motor assembly (drive motor, capacitor, and AC connector).
g. To replace drive-motor assembly, perform, in reverse order, Steps f through a substituting word "replace" for word "remove."

6.5.4 STEPPER-MOTOR REPLACEMENT

a. Perform Steps a through e of paragraph 6.5.2.
b. Remove pins J3-04, 03 and 02.
c. Loosen bottom 2x screws and remove stepper motor and band.
d. Reverse the above procedure to reassemble stepper motor and band drive to unit. Perform band alignment procedure per paragraph 6.4.8.

6.5.5 DOOR-LOCK-SOLENOID REPLACEMENT

a. Disconnect P7 from PWA.
b. Remove screws securing the front-panel assembly to base casting.
c. Remove the screws securing the solenoid assembly to the solenoid mount.
d. Remove the solenoid leads from P7.
e. Turn the 4-40 set screw in the solenoid mount counter clockwise until the set-screw tip is flush with the edge of the threaded insert.
f. Insert the leads of the new solenoid assembly into P7.
g. Attach the solenoid assembly to the solenoid mount using the screws previously removed.
h. Manually depress the solenoid pluger until seated (as if power were on).
i. With the solenoid plunger still depressed, turn the 4-40 set screw in the solenoid mount clockwise until the set-screw tip makes contact with the brass tip of the solenoid pluger.
j. Turn the set screw an additional half turn past the point of contact with the plunger.
k. Loosen the screws securing the solenoid mount to the front panel so that the solenoid mount and solenoid assembly will slide back and forth in the slotted holes of the solenoid mount.
l. Slide the solenoid mount towards the button housing so that the shoulder on the solenoid plunger seats against the button housing.
m. Continue to slide the solenoid mount (thereby depressing the plunger) until a gap of 0.150 in. ±0.005 in (3.81 mm ±0.127 mm) is achieved between the brass tip of the plunger and the tip of the set screw, (refer to Figure 6-14).
n. Tighten the screws thus securing the solenoid mount keeping the adjustment described in paragraph "m" intact.
o. Replace the front panel on the base casting.
p. Connect P7 to the PWA.

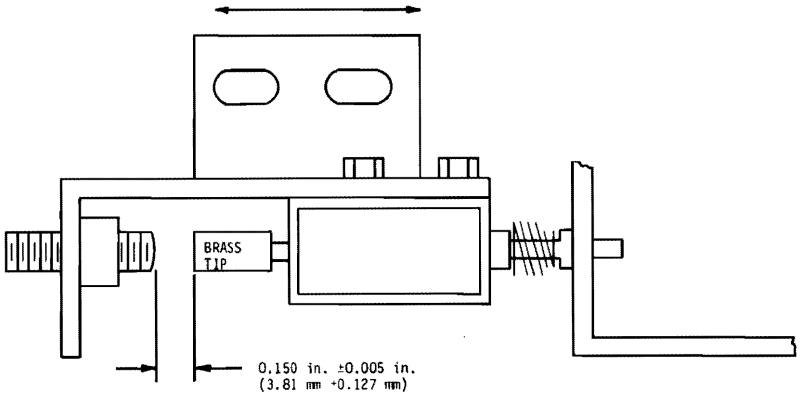

FIGURE 6-13. SOLENOID MOUNT.

6.6 FREQUENCY CONVERSION

6.6.1 OPERATING FREQUENCIES CONVERSION PROCEDURE

This procedure is to be used to convert the FDD unit from 60 Hz operation to 50 Hz operation, or vice versa. This is accomplished by reversing the dual-diameter reversible pulley on the spindle-motor shaft using the following steps:

a. Remove AC power.
b. Remove printed-circuit board assembly per paragraph 6.5.1.
c. Remove the belt from the spindle-motor pulley. (Accessible from the under side of unit.)
d. Loosen setscrew and remove pulley.
e. Reverse pulley and replace on motor shaft.
f. Position pulley allowing tolerance of 0.039 in. (0.99 mm ±0.10 in. (0.254 mm) between shoulder of motor mounting screws and pulley (Figure 6-14).
g. Tighten down setscrew.
h. Replace belt and printed-circuit board.

CAUTION

It is IMPORTANT that the new operating frequency be marked on the unit's rating nameplate.

NOTE: When converting from 60 Hz to 50 Hz, the same belt may be used. When converting from 50 Hz to 60 Hz, a new belt must be installed.

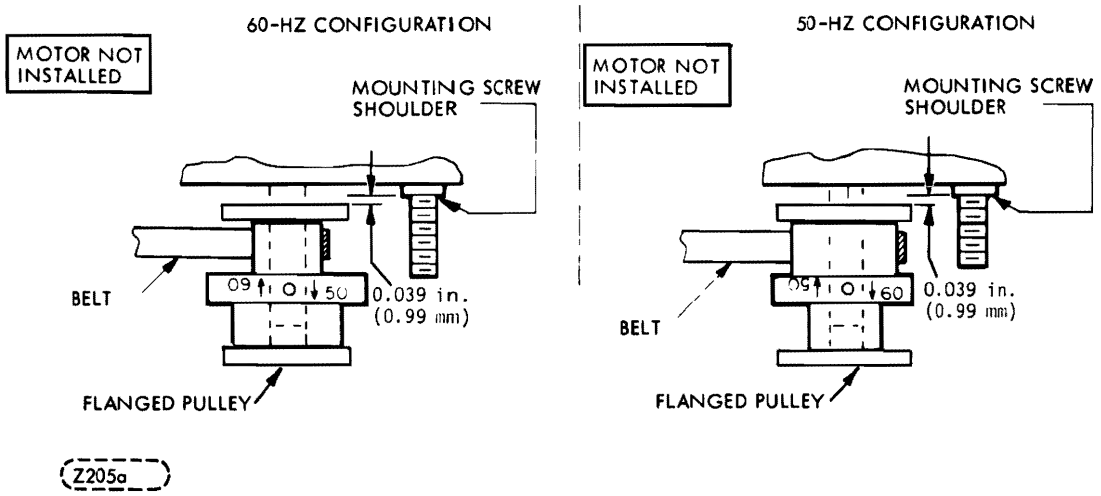

FIGURE 6-14. DRIVE-PULLEY REVERSAL

MAINTENANCE AIDS

7.1 INTRODUCTION

This section contains detailed information on the logic circuits used in the FDD. The logic consists of two types of circuits: discrete component and integrated circuits (IC). Integrated circuits are contained within a single chip and discrete component circuits contain individually identifiable resistors, capacitors, transistors, etc.

7.2 PHYSICAL DESCRIPTION (Logic)

All components are mounted on one side of the printed circuit board. The board is 8 x 11 inches (203.2 mm x 279.4 mm) and contain both IC and discrete component circuits.

7.3 USE OF RELATIVE LEVEL INDICATORS

The relative level indicator is a small triangle located on the input or output to a logic block. The presence or absence of this indicator indicates the conditions that are necessary to satisfy the function of the logic block. The presence of the triangle indicates a 0 logic level on that line is needed to satisfy the function. The absence of the triangle indicates a logical 1 is needed to satisfy the function.

The relative level indicator depicts the occurrence of inversion. Figure 7-1 shows some representative examples of the relative level indicator being used in this manner.

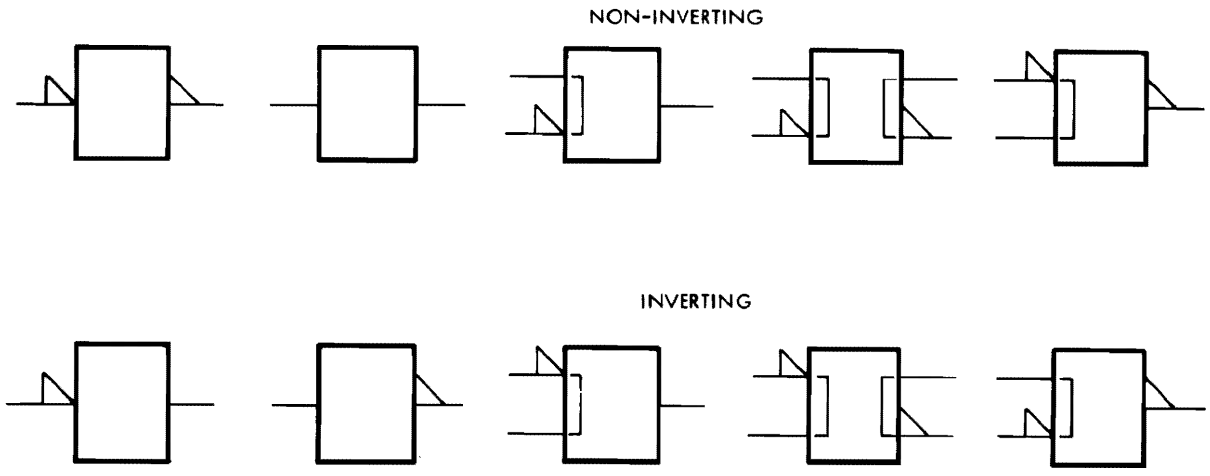

(AA042f)

Figure 7-1. Inversion Conventions

7.4 INTEGRATED CIRCUITS

Figure 7-2 shows an example of a schematic block and the information that it contains. The first line gives the function symbol which identifies the logic function that the block performs. Refer to Figure 7-3 for a summary of function symbols. The second line gives the CDC element number. The third line on the schematic block gives the circuit reference designation.

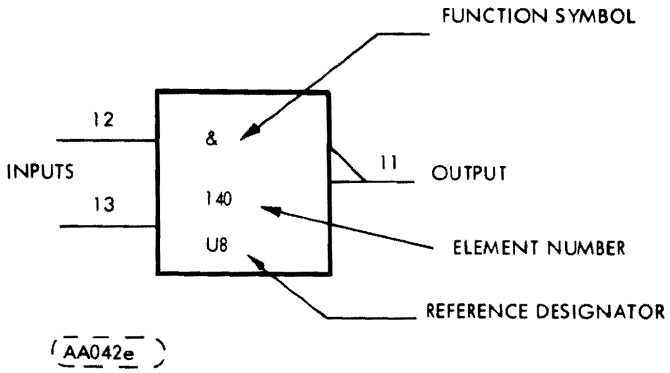

Figure 7-2. Integrated Circuit

FUNCTION SYMBOLS	
&	AND GATE OR INVERTER
1	OR GATE OR INVERTER
=1	EXCLUSIVE OR
1 ⎍	ONE SHOT
Σ	SUMMING CIRCUIT. NUMBER FOLLOWING (EXAMPLE 100) INDICATES GAIN OF 100
X/Y	LEVEL CONVERSION - TRANSMISSION LINE TO LOGIC LEVEL, SWITCH STATE TO LOGIC LEVEL OR LOGIC LEVEL TO POWER OUTPUT
	SCHMITT TRIGGER (LOWER TRIP POINT ADJUSTABLE)
GENERAL SYMBOLS	
	INDICATES NON STANDARD LOGIC LEVEL
	INDICATES ANALOG SIGNAL
	TEST POINTS
	INHIBITING INPUT

BB151b

Figure 7-3. Schematic Symbols

PARTS DATA

8.1 INTRODUCTION

This section contains an illustrated parts breakdown that describes and illustrates all variations of the (band-driven) Model 9406 Flexible Disk Drive (FDD). In general, parts are in disassembly sequence but do not necessarily indicate the maximum recommended disassembly of parts in the field.

8.2 ILLUSTRATIONS

Item numbers within a circle (1) indicate an assembly (group of parts). Item numbers without a circle, 1, indicate a single part; a group of parts that are pinned or press fitted together; or a group of parts which is normally replaced as an assembly.

8.3 PARTS LIST

In addition to the accompaning parts list on each illustration, two additional Parts Lists are available; the Top-Down Assembly/Component Parts List and the Cross Reference Index. Instruction for the use of all Parts Lists is given in para. 8.6.

8.4 PRODUCT CONFIGURATIONS

In conjunction with Table 8-1, Figure 8-1 serves two purposes;

1. When used with Table 8-1, it identifies all unique parts and assemblies for each FDD variation.
2. It identifies by sheet location where all major assemblies are broken down.

8.4.1 HARDWARE PRODUCT CONFIGURATOR (HPC)

To determine what parts are used on a particular model, find the applicable HPC number in Table 8-1. The item numbers at the top of Table 8-1 corresponds with the item numbers in Figure 8-1. All parts and assemblies that apply to the HPC number will be identified with an 'X' ('0' means not applicable). NOTE: The HPC Number is identical to the Equip. Ident. No. shown on the label.

8.5 REPLACEMENT PARTS

When ordering replacement parts for the FDD, the inclusion of the following information for each part ordered will ensure positive identification:

1. Equip. Ident. No
2. Publication Number 75888344
3. Figure and Item Number
4. Identification Number and Description

NOTE:
Before ordering parts however, refer to paragraph 8.5.1 Spare Parts.

8.5.1 SPARE PARTS

This Illustrated Parts Breakdown is complete to the extent that all parts and assemblies are depicted and identified. Replacement part availability depends on the materials and provisioning operation of the supplier.

To assist the service representative in selecting replacement parts with minimum requisitioning lead times, engineering recommended spare parts which reflect the intended service level of the device are identified with the letters SP adjacent to the item number on the face of each illustration. Replaceable non-spared items will require longer requisitioning lead times.

TABLE 8-1. PRODUCT CONFIGURATION

	ITEM NUMBERS						
	3333333333	3333333333	3444444444	4444444444	4444444444	4444444444	4444444444
	0000000001	5555555555	9000000000	0111111111	2222222222	3333333333	4455667777
HPC	1234567890	0123456789	9012345678	9012345678	0123456789	0123456789	0101010123
77618000	00X00000X0	X000000000	0XX0000000	0X00000000	X000000000	X000000000	X0X0X00000
77618001	00X00000X0	0X00000000	0XX0000000	0X00000000	X000000000	X000000000	X0X0X00000
77618002	00X00000X0	00X0000000	0XX0000000	0X00000000	X000000000	X000000000	00X0X00000
77618003	00X00000X0	X000000000	0XX0000000	0X00000000	X000000000	0X00000000	X0X0X00000
77618004	00X00000X0	0X00000000	0XX0000000	0X00000000	X000000000	0X00000000	X0X0X00000
77618005	00X00000X0	0X00000000	0XX0000000	0X00000000	X000000000	0X00000000	X0X0X00000
77618006	00X00000X0	0X00000000	0XX0000000	0X00000000	X000000000	X000000000	X0X0X00000
77618007	00X00000X0	000X000000	0XX0000000	0X00000000	X000000000	0X00000000	X0X0X0X000
77618008	00X00000X0	000X000000	0XX0000000	0X00000000	X000000000	0X00000000	X0X0X0X000
77618009	00X00000X0	0000X00000	0XX0000000	0X00000000	X000000000	0X00000000	X0X0X0X000
77618010	00X00000X0	0000X00000	0XX0000000	0X00000000	X000000000	0X00000000	X0X0X0X000
77618011	00X00000X0	000X000000	0XX0000000	0X00000000	X000000000	0X00000000	X0X0X0X000
77618012	00X00000X0	000X000000	0XX0000000	0X00000000	X000000000	0X00000000	X0X0X0X000
77618013	00X00000X0	0000X00000	0XX0000000	0X00000000	X000000000	0X00000000	X0X0X0X000
77618014	00X00000X0	0000X00000	0XX0000000	0X00000000	X000000000	0X00000000	X0X0X0X000
77618015	00X00000X0	00X0000000	0XX0000000	0X00000000	X000000000	X000000000	X0X0X00000
77618016	00X00000X0	0X00000000	0XX0000000	0X00000000	X000000000	X000000000	X0X0X00000
77618017	00X0000X00	0X00000000	0XX0000000	0X00000000	X000000000	00X0000000	X0X0X00000
77618018	00X00000X0	X000000000	0XX0000000	0X00000000	X000000000	X000000000	00X0X00000
77618019	00X00000X0	X000000000	0XX0000000	0X00000000	X000000000	0X00000000	X0X0X00000
77618020	00X000000X	000X000000	X00X000000	00X000X000	0X00000000	000000X000	X0X0X0XX00
77618021	00X000000X	0000X00000	X00X000000	00X000X000	0X00000000	000000X000	X0X0X0XX00
77618022	00X000000X	000X000000	X00X000000	000X00X000	0X00000000	0000000X00	X0X0X0X0X0
77618023	00X000000X	0000X00000	X00X000000	000X00X000	0X00000000	0000000X00	X0X0X0X0X0
77618024	00X000000X	000X000000	X00X000000	00X000X000	0X00000000	000000X000	X0X0X00X00
77618025	00X000000X	0000X00000	X00X000000	00X000X000	0X00000000	000000X000	X0X0X00X00
77618026	00X000000X	000X000000	X00X000000	000X00X000	0X00000000	0000000X00	X0X0X000X0
77618027	00X000000X	0000X00000	X00X000000	000X00X000	0X00000000	0000000X00	X0X0X000X0
77618028	00X00000X0	X000000000	0XX0000000	0X00000000	X000000000	X000000000	X0X0X00000
77618029	00X00000X0	0X00000000	0XX0000000	0X00000000	X000000000	0X00000000	X0X0X00000
77618030	00X0000X00	000X000000	0XX0000000	0X00000000	X000000000	000X000000	X0X0X00000
77618031	00X0000X00	0000X00000	0XX0000000	0X00000000	X000000000	000X000000	X0X0X00000
77618032	00X0000X00	0000X00000	0XX0000000	0X00000000	X000000000	000X000000	X0X0X00000
77618033	00X00000X0	X000000000	0XX0000000	0X00000000	X000000000	0X00000000	X0X0X00000
77618034	00X000000X	000X000000	000XX00000	0000X0X000	0X0000000	00000X0000	X0X0X000X0
77618035	00X000000X	000X000000	X00X000000	000X00X000	0X00000000	00000X0000	X0X0X0X0X0
77618036	00X000000X	0000X00000	X00X000000	000X00X000	0X00000000	00000X0000	X0X0X0X0X0
77618037	00X000000X	0000X00000	X00X000000	000X00X000	0X00000000	00000X0000	X0X0X0X0X0
77618038	00X000000X	0000X00000	X00X000000	000X00X000	0X00000000	00000X0000	X0X0X000X0
77618039	00X00000X0	X000000000	00X00X0000	00000X0000	000X000000	0X00000000	X0X0X00000
77618040	00X00000X0	0X00000000	00X00X0000	00000X0000	000X000000	0X00000000	X0X0X00000
77618041	00X00000X0	0X00000000	00X00X0000	00000X0000	000X000000	0X00000000	X0X0X00000
77618042	00X000000X	000X000000	X00X000000	000X00X000	0X00000000	00000X0000	X0X0X0X0X0
77618043	00X000000X	000X000000	X00X000000	000X00X000	0X00000000	00000X0000	X0X0X000X0
77618044	00X000000X	00000X0000	X00X000000	000X00X000	0X00000000	00000X0000	X0X0X000X0
77618045	00X000000X	0000X00000	X00X000000	000X00X000	0X00000000	00000X0000	X0X0X000X0
77618046	00X000000X	000X000000	X00X000000	000X00X000	0X00000000	00000X0000	X0X0X000X0
77618047	00X000000X	00000X0000	X00X000000	000X00X000	0X00000000	0000000X00	X0X0X000X0
77618048	00X000000X	000X000000	X00X000000	000X00X000	0X00000000	0000000X00	X0X0X000X0
77618049	00X000000X	X000000000	0XX0000000	0X00000000	X000000000	00X0000000	X0X0X00000
77618050	00X000000X	000000X000	X00X000000	000X00X000	0X00000000	0000000X00	X0X0X0X0XC
77618051	00X00000X0	0X00000000	00X000X000	X000000000	0000X00000	0X00000000	X0X0X00000
77618052	00X00000X0	000X000000	0XX0000000	0X00000000	X000000000	0X00000000	X0X0X00X00
77618053	00X0000X00	0X00000000	0XX0000000	0X00000000	X000000000	00X0000000	X0X0X00000

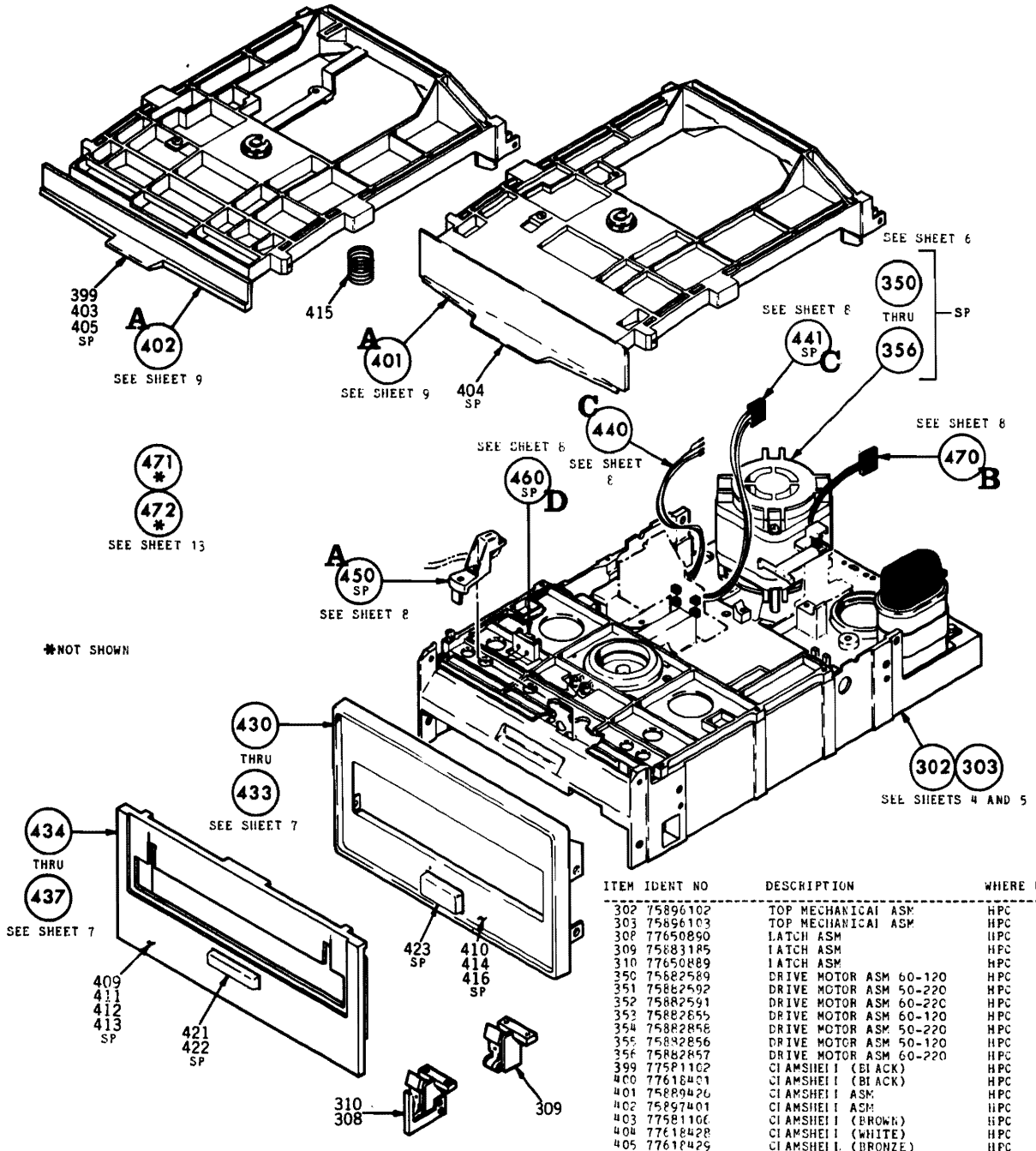

ITEM	IDENT NO	DESCRIPTION	WHERE USED
302	75896102	TOP MECHANICAL ASM	HPC
303	75896103	TOP MECHANICAL ASM	HPC
308	77650890	LATCH ASM	HPC
309	75883185	LATCH ASM	HPC
310	77650889	LATCH ASM	HPC
350	75882589	DRIVE MOTOR ASM 60-120	HPC
351	75882592	DRIVE MOTOR ASM 50-220	HPC
352	75882591	DRIVE MOTOR ASM 60-220	HPC
353	75882855	DRIVE MOTOR ASM 60-120	HPC
354	75882858	DRIVE MOTOR ASM 50-220	HPC
355	75882856	DRIVE MOTOR ASM 50-120	HPC
356	75882857	DRIVE MOTOR ASM 60-220	HPC
399	775P1102	CLAMSHELL (BLACK)	HPC
400	77618401	CLAMSHELL (BLACK)	HPC
401	75889426	CLAMSHELL ASM	HPC
402	75897401	CLAMSHELL ASM	HPC
403	77581106	CLAMSHELL (BROWN)	HPC
404	77618428	CLAMSHELL (WHITE)	HPC
405	77618429	CLAMSHELL (BRONZE)	HPC
409	77899329	FRONT PANEL	HPC
410	75899301	FRONT PANEL (BLACK)	HPC
411	77631302	FRONT PANEL (BLACK)	HPC
412	77631402	FRONT PANEL (BLACK)	HPC
413	77631406	FRONT PANEL (BROWN)	HPC
414	75889326	FRONT PANEL (WHITE)	HPC
415	75881578	SPRING	HPC
420	75869701	BUTTON (BLACK)	HPC
421	75897201	BUTTON (BLACK)	HPC
422	75897206	BUTTON (BROWN)	HPC
423	75889728	BUTTON (WHITE)	HPC
424	75889729	BUTTON	HPC
430	75882401	FRONT PANEL ASM	HPC
431	75882406	FRONT PANEL ASM	HPC
432	75882405	FRONT PANEL ASM	HPC
433	75882404	FRONT PANEL ASM	HPC
434	75897950	FRONT PANEL ASM	HPC

ITEM	IDENT NO	DESCRIPTION	WHERE USED
435	75897951	FRONT PANEL ASM	HPC
436	75897952	FRONT PANEL ASM	HPC
437	75897953	FRONT PANEL ASM	HPC
440	75882037	WRITE PROTECT	HPC
441	75882036	DISK IN PLACE DET	HPC
450	75882185	INDEX DETECTOR KIT	HPC
460	75889979	DOOR INTERLOCK KIT	HPC
470	75883335	KIT, TK "43"	HPC
471	75883336	KIT, SIDE MTG	HPC
472	75894197	KIT, BOTTOM MTG	HPC

TABLE 8-1. PRODUCT CONFIGURATION

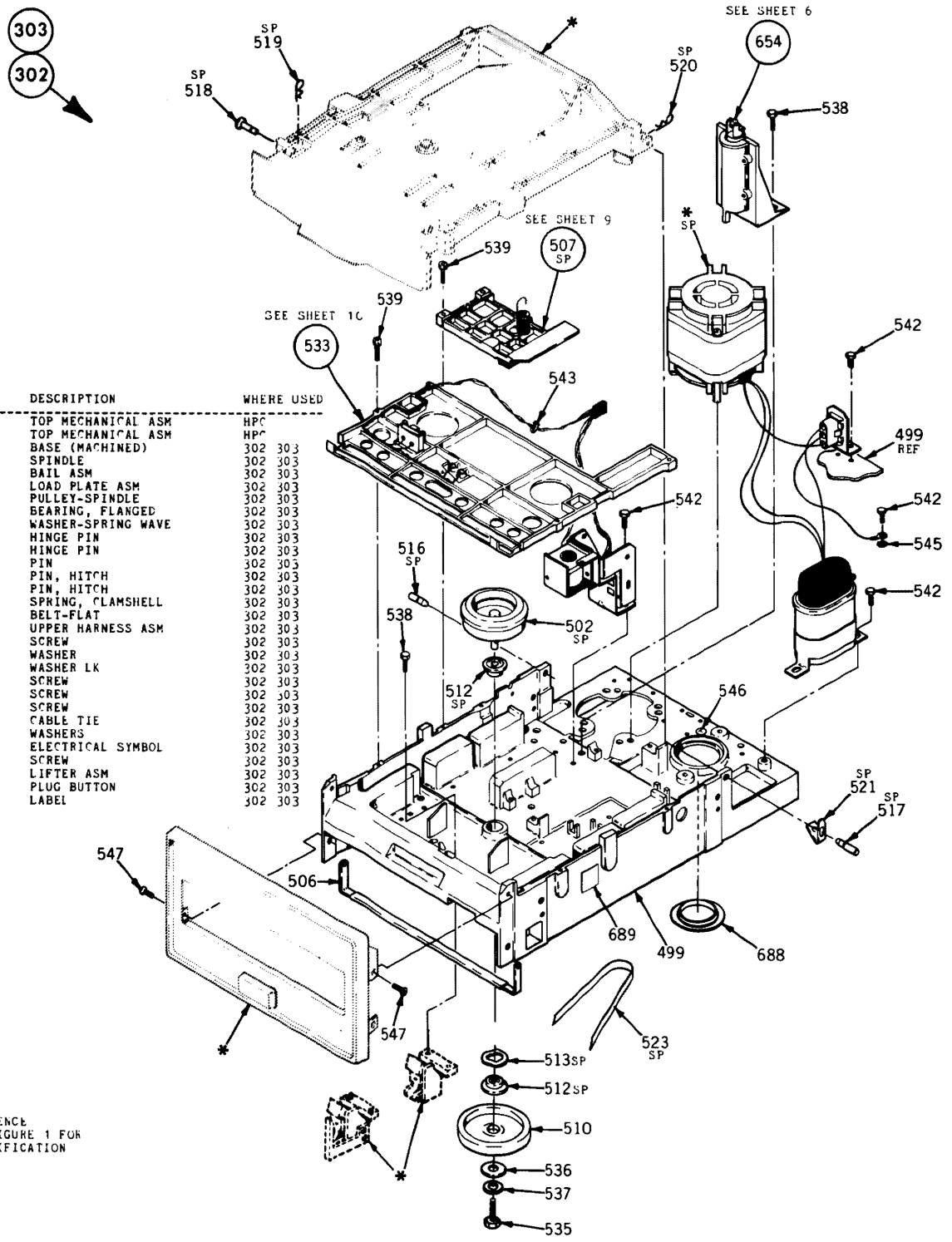

ITEM	IDENT NO	DESCRIPTION	WHERE USED
302	75896102	TOP MECHANICAL ASM	HPC
303	75896103	TOP MECHANICAL ASM	HPC
499	75883128	BASE (MACHINED)	302 303
502	75881591	SPINDLE	302 303
506	75888675	BAIL ASM	302 303
507	75882136	LOAD PLATE ASM	302 303
510	77646600	PULLEY-SPINDLE	302 303
512	77613697	BEARING, FLANGED	302 303
513	93529005	WASHER-SPRING WAVE	302 303
516	75888590	HINGE PIN	302 303
517	75888591	HINGE PIN	302 303
518	75888595	PIN	302 303
519	75890210	PIN, HITCH	302 303
520	75890211	PIN, HITCH	302 303
521	75888570	SPRING, CLAMSHELL	302 303
523	75293203	BELT-FLAT	302 303
533	75883330	UPPER HARNESS ASM	302 303
535	10127334	SCREW	302 303
536	10125605	WASHER	302 303
537	10125803	WASHER LK	302 303
538	93592164	SCREW	302 303
539	15004800	SCREW	302 303
542	93592162	SCREW	302 303
543	94277400	CABLE TIE	302 303
545	10126401	WASHERS	302 303
546	75731302	ELECTRICAL SYMBOL	302 303
547	92012727	SCREW	302 303
654	75882895	LIFTER ASM	302 303
688	51891120	PLUG BUTTON	302 303
689	75896400	LABEL	302 303

*REFERENCE SEE FIGURE 1 FOR IDENTIFICATION

FIGURE 8-2. TOP MECHANICAL ASSEMBLY (Sheet 1 of 2)

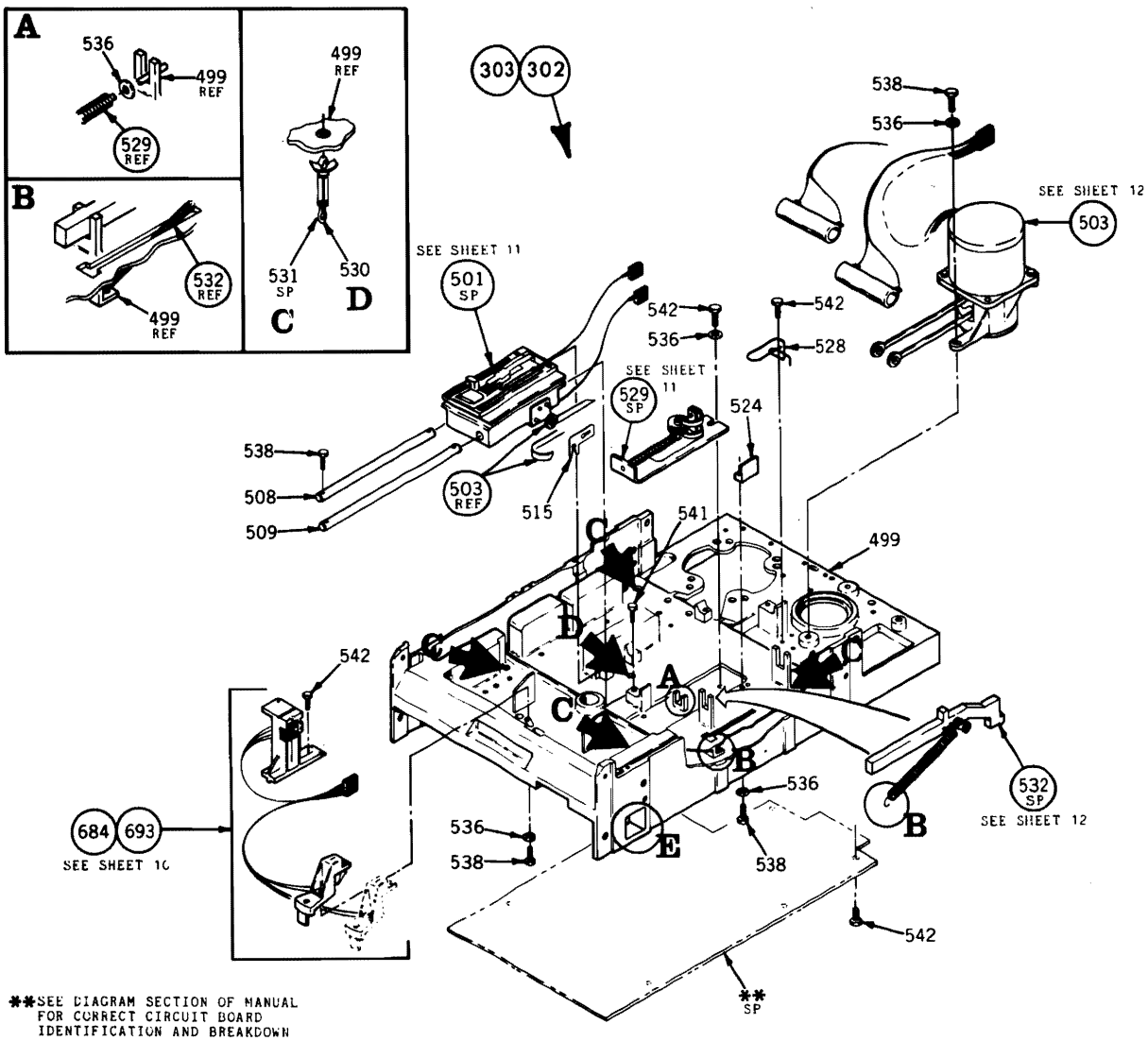

**SEE DIAGRAM SECTION OF MANUAL FOR CORRECT CIRCUIT BOARD IDENTIFICATION AND BREAKDOWN

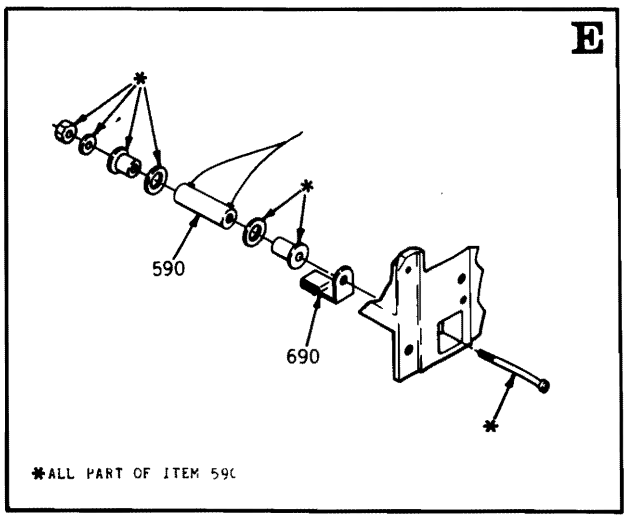

*ALL PART OF ITEM 590

ITEM	IDENT NO	DESCRIPTION	WHERE USED
302	75896102	TOP MECHANICAL ASM	HPC
303	75896103	TOP MECHANICAL ASM	HPC
499	75883128	BASE (MACHINED)	302 303
501	75896122	CARRIAGE ASSEMBLY	302 303
503	75892007	ACTUATOR ASSEMBLY	302 303
508	75881326	GUIDE CARRIAGE	302 303
509	75881275	GUIDE ROD	302 303
515	75883017	RETAINER	302 303
524	75883240	LATCH BLOCK	302 303
528	75883095	GUARD, HEAD CABLE	302 303
529	75883215	TENSION ASSEMBLY	302 303
530	75774732	CLIP-PUSH IN	302 303
531	75774736	CLIP-PUSH IN	302 303
532	75889396	EJECTOR ASM	302 303
534	09023703	SCREW	302 303
536	10125605	WASHER	302 303
538	93592164	SCREW	302 303
541	18862916	SCREW	302 303
542	93592162	SCREW	302 303
624	10126101	LOCK WASHER	302 303
684	75882177	LOWER HARNESS ASM	302
690	75897601	CABLE GUARD	302 303
693	77641815	LOWER HARNESS ASM	303

FIGURE 8-2. TOP MECHANICAL ASSEMBLY (Sheet 2 of 2)

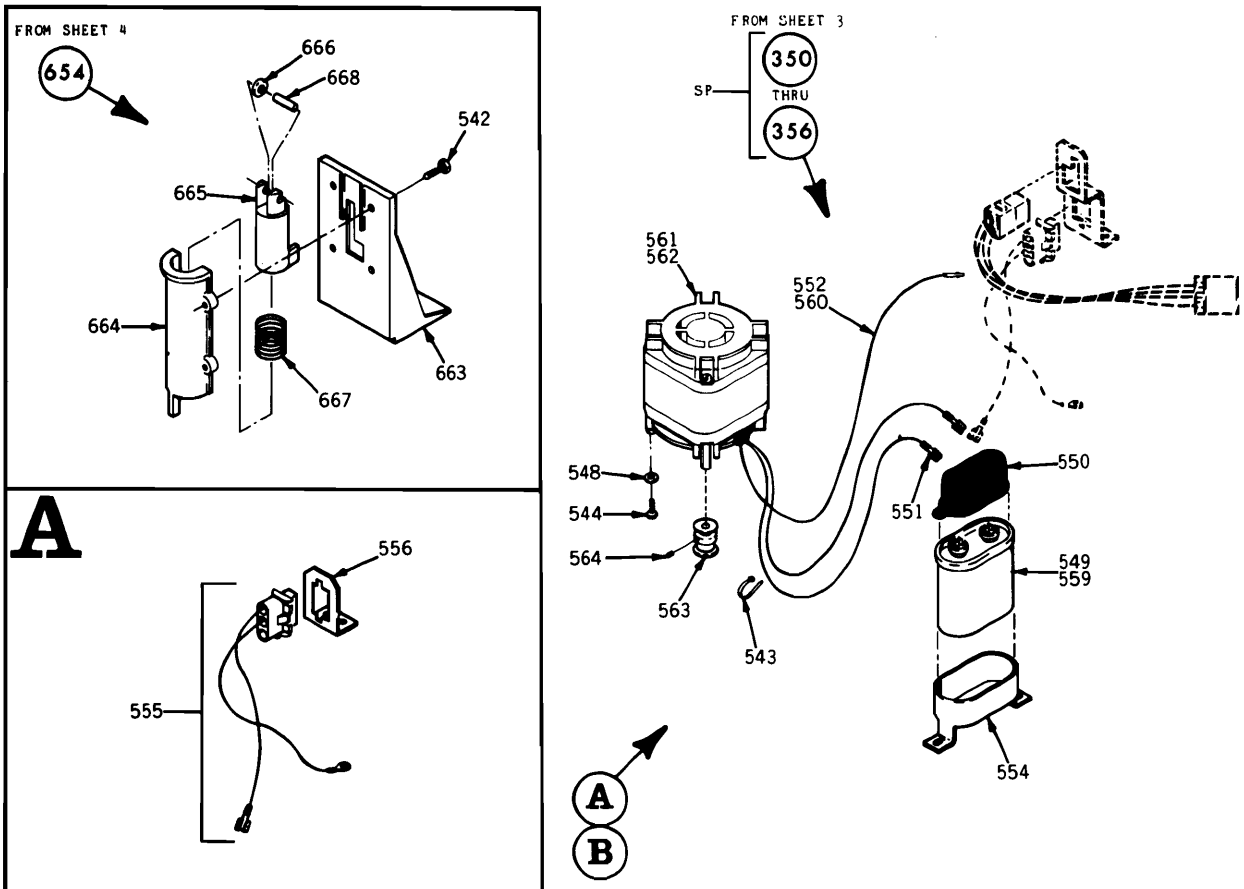

ITEM	IDENT NO	DESCRIPTION	WHERE USED
350	75882589	DRIVE MOTOR ASM 60-120	HPC
351	75882592	DRIVE MOTOR ASM 50-220	HPC
352	75882591	DRIVE MOTOR ASM 60-220	HPC
353	75882855	DRIVE MOTOR ASM 60-120	HPC
354	75882858	DRIVE MOTOR ASM 50-220	HPC
355	75882856	DRIVE MOTOR ASM 50-120	HPC
356	75882857	DRIVE MOTOR ASM 60-220	HPC
542	93592162	SCREW	654
543	94277400	CABLE TIE	350-356
544	93592202	SCREW	350-356
548	10126104	WASHER	350-356
549	75738402	CAPACITOR	350 353
549	75738402	CAPACITOR	355
551	62121108	TERMINAL	350-356
552	83435504	CONTACT	353
554	16439600	MOUNTING BRKT	350-356
555	75882341	CABLE	350-352
556	75882490	BRACKET	350-352
559	75738480	CAPACITOR	351 352
559	75738480	CAPACITOR	354 356
560	83435501	CONTACT	350-352
560	83435501	CONTACT	354-356
561	75726925	MOTOR	350 353
561	75726925	MOTOR	355
562	75726924	MOTOR	351 352
562	75726924	MOTOR	354 356
563	75696006	PULLEY-DUAL DR	350-356
564	83413405	SCREW	350-356
654	75882895	LIFTER ASM	302 303
663	75882740	COVER	654
664	75882735	CYLINDER	654
665	77658915	PISTON	654
666	75882725	ROLLER	654
667	77658910	SPRING	654
668	92021009	PIN	654
671	75883023	CABLE	355
671	75883023	CABLE	353 354
672	75882890	BRACKET	355
672	75882890	BRACKET	353 354

FIGURE 8-3. DRIVE MOTOR AND LIFTER ASSEMBLIES

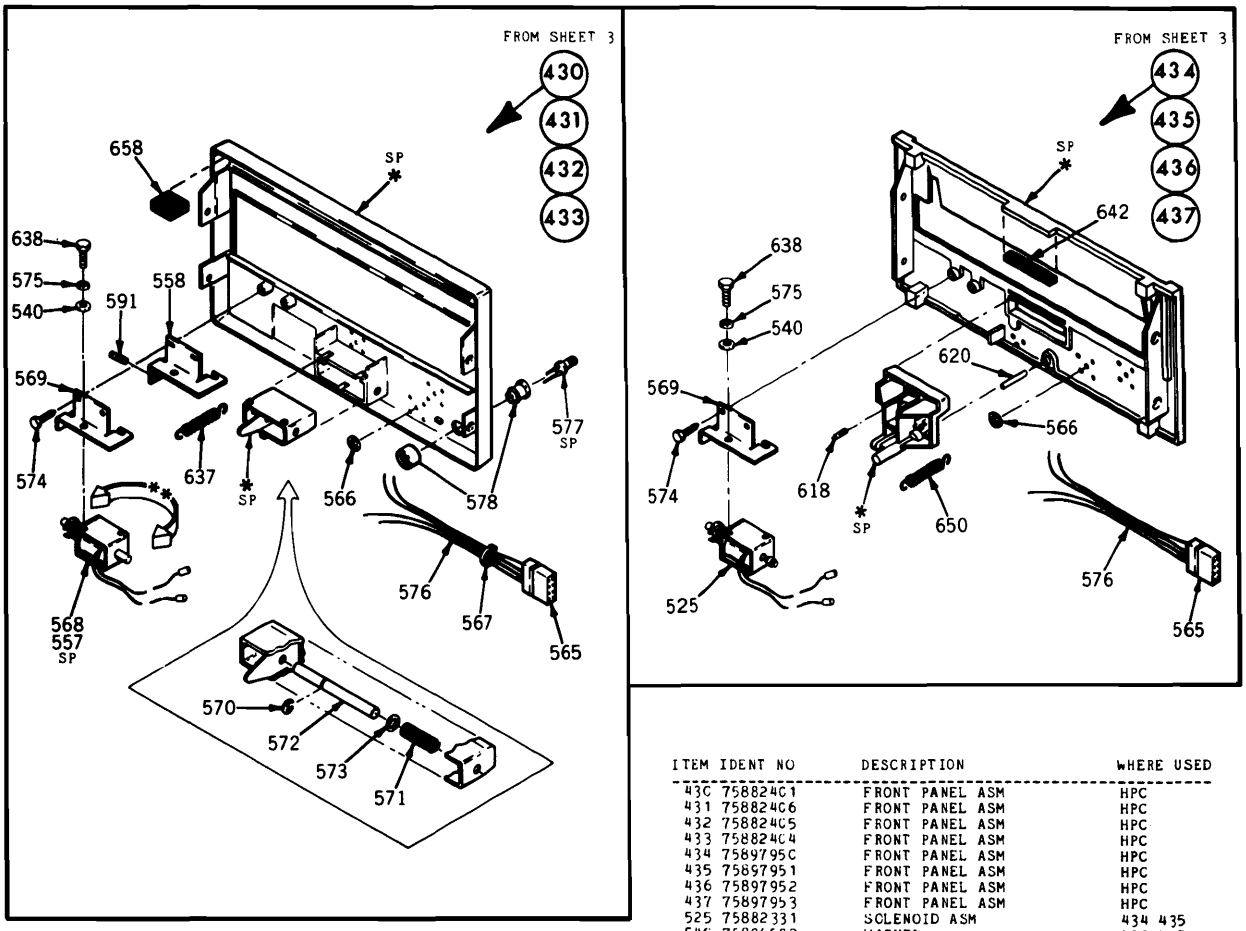

*REFERENCE
SEE FIGURE 1
FOR INFORMATION

**SHOWN IN LOCK WITH POWER ON POSITION. ROTATE 180 FOR LOCK WITH POWER OFF POSITION.

ITEM	IDENT NO	DESCRIPTION	WHERE USED
430	75882401	FRONT PANEL ASM	HPC
431	75882406	FRONT PANEL ASM	HPC
432	75882405	FRONT PANEL ASM	HPC
433	75882404	FRONT PANEL ASM	HPC
434	75897950	FRONT PANEL ASM	HPC
435	75897951	FRONT PANEL ASM	HPC
436	75897952	FRONT PANEL ASM	HPC
437	75897953	FRONT PANEL ASM	HPC
525	75882331	SOLENOID ASM	434 435
540	75806502	WASHER	432-435
557	75882332	SOLENOID ASM	432
558	77636695	SOLENOID MOUNT	432
565	75293954	HOUSING	431-437
566	0084820 1	RET RING	431-437
567	9427740C	CABLE TIE	431-433
568	75882330	SOLENOID ASM	433
569	77632960	SOLENOID MOUNT	433-435
570	75888600	SHAFT LOCK	432 433
571	75882035	SPRING	432 433
572	92033147	RET RING	432 433
573	75882107	WASHER	432 433
574	94376917	SCREW	432-435
575	1012580 1	WASHER	432-435
576	75882335	CABLE	431-437
577	7581C701	LED	431-433
578	7581C703	RET RING	431-433
591	9382C166	SET SCREW	432
618	77612981	LIGHT EMITTING DIODE	434-437
620	7761CC3C	DOWEL PIN	434-437
637	75899167	SPRING	430-433
638	1012710 2	SCREW	432-435
642	7764680 4	BUMPER	434-437
650	75899166	SPRING	434-437
658	75883338	BUMPER	431-433

FIGURE 8-4. FRONT PANEL ASSEMBLY

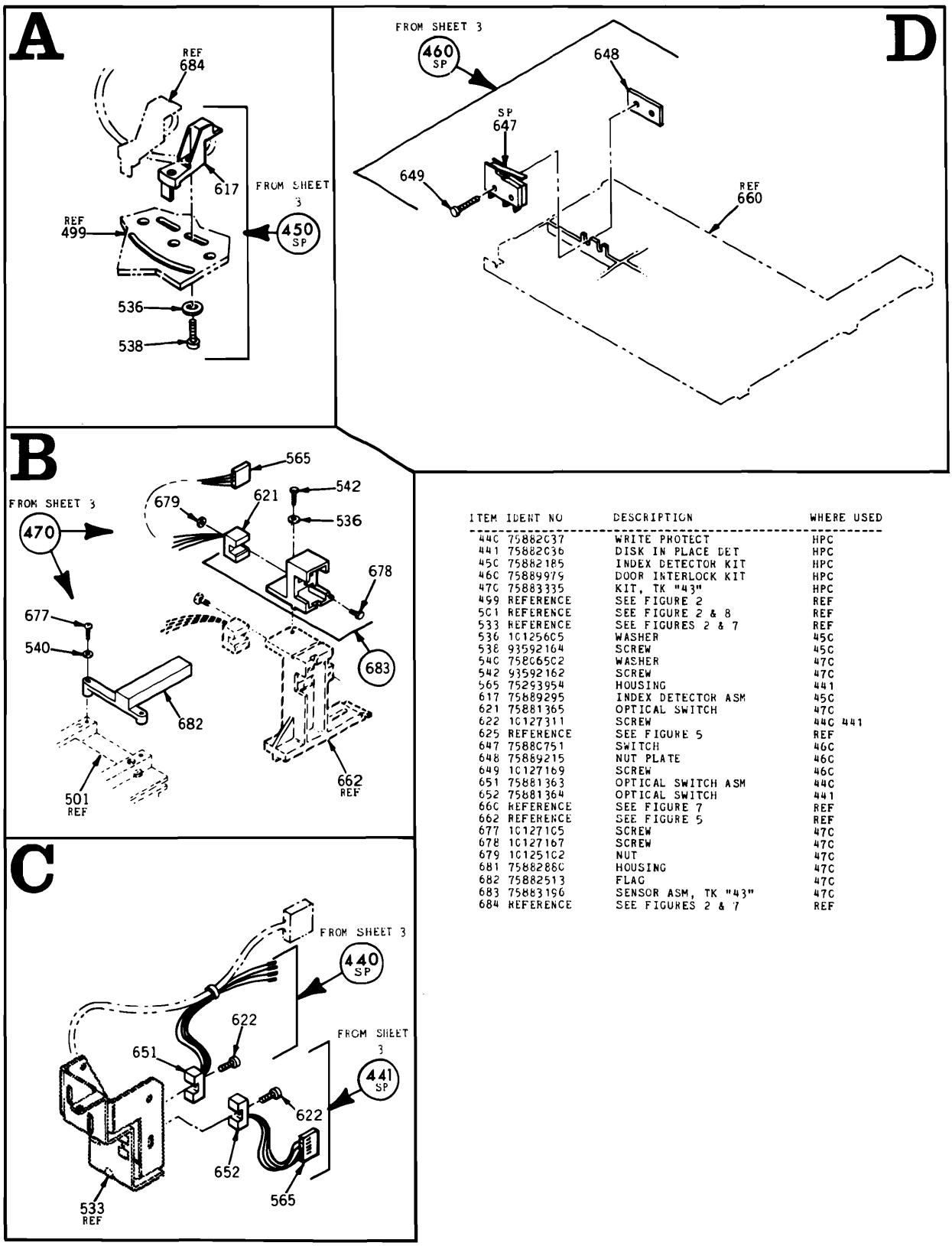

ITEM	IDENT NO	DESCRIPTION	WHERE USED
440	75882C37	WRITE PROTECT	HPC
441	75882C36	DISK IN PLACE DET	HPC
450	75882185	INDEX DETECTOR KIT	HPC
460	75889979	DOOR INTERLOCK KIT	HPC
470	75883335	KIT, TK "43"	HPC
499	REFERENCE	SEE FIGURE 2	REF
501	REFERENCE	SEE FIGURE 2 & 8	REF
533	REFERENCE	SEE FIGURES 2 & 7	REF
536	1C1256C5	WASHER	45C
538	93592164	SCREW	45C
540	75BC65C2	WASHER	47C
542	93592162	SCREW	47C
565	75293954	HOUSING	441
617	75889295	INDEX DETECTOR ASM	45C
621	75881365	OPTICAL SWITCH	47C
622	1C127311	SCREW	44C 441
625	REFERENCE	SEE FIGURE 5	REF
647	7588C751	SWITCH	46C
648	75889215	NUT PLATE	46C
649	1C127169	SCREW	46C
651	75881363	OPTICAL SWITCH ASM	44C
652	75881364	OPTICAL SWITCH	441
660	REFERENCE	SEE FIGURE 7	REF
662	REFERENCE	SEE FIGURE 5	REF
677	1C127105	SCREW	47C
678	1C127167	SCREW	47C
679	1C125102	NUT	47C
681	7588288C	HOUSING	47C
682	75882513	FLAG	47C
683	75883196	SENSOR ASM, TK "43"	47C
684	REFERENCE	SEE FIGURES 2 & 7	REF

FIGURE 8-5. FEATURE KITS

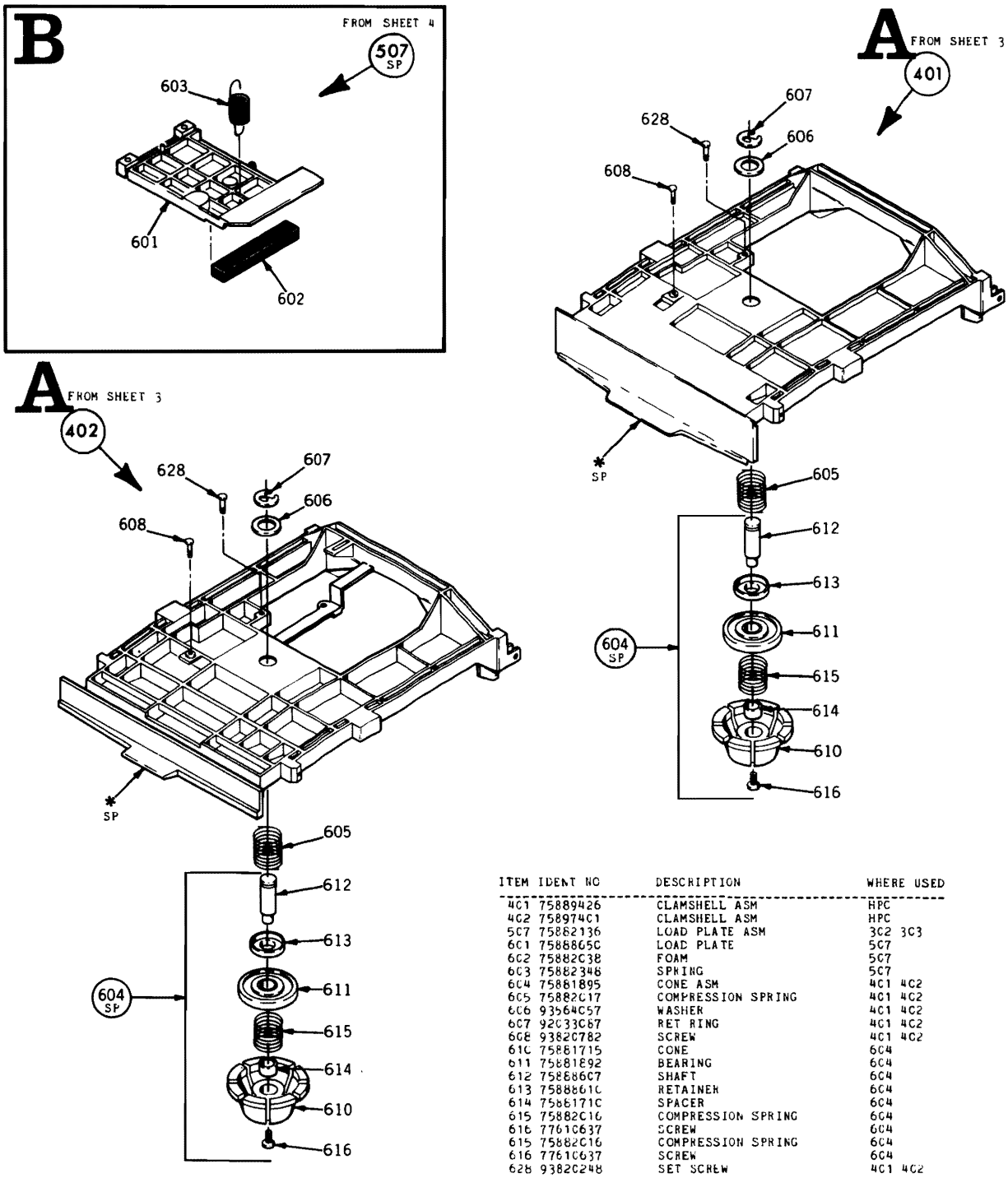

ITEM	IDENT NO	DESCRIPTION	WHERE USED
4C1	75889426	CLAMSHELL ASM	HPC
4C2	75897401	CLAMSHELL ASM	HPC
5C7	75882136	LOAD PLATE ASM	3C2 3C3
6C1	7588865C	LOAD PLATE	5C7
6C2	75882C38	FOAM	5C7
6C3	75882348	SPRING	5C7
6C4	75881895	CONE ASM	4C1 4C2
6C5	75882C17	COMPRESSION SPRING	4C1 4C2
6C6	93564C57	WASHER	4C1 4C2
6C7	92C33C87	RET RING	4C1 4C2
6C8	93820782	SCREW	4C1 4C2
61C	75881715	CONE	6C4
611	75881E92	BEARING	6C4
612	75888667	SHAFT	6C4
613	7588861C	RETAINER	6C4
614	7588171C	SPACER	6C4
615	75882C16	COMPRESSION SPRING	6C4
616	77610637	SCREW	6C4
615	75882C16	COMPRESSION SPRING	6C4
616	77610637	SCREW	6C4
628	93820248	SET SCREW	4C1 4C2

*REFERENCE
SEE FIGURE 1
FOR IDENTIFICATION

FIGURE 8-6. CLAMSHELL AND LOAD PLATE ASSEMBLIES

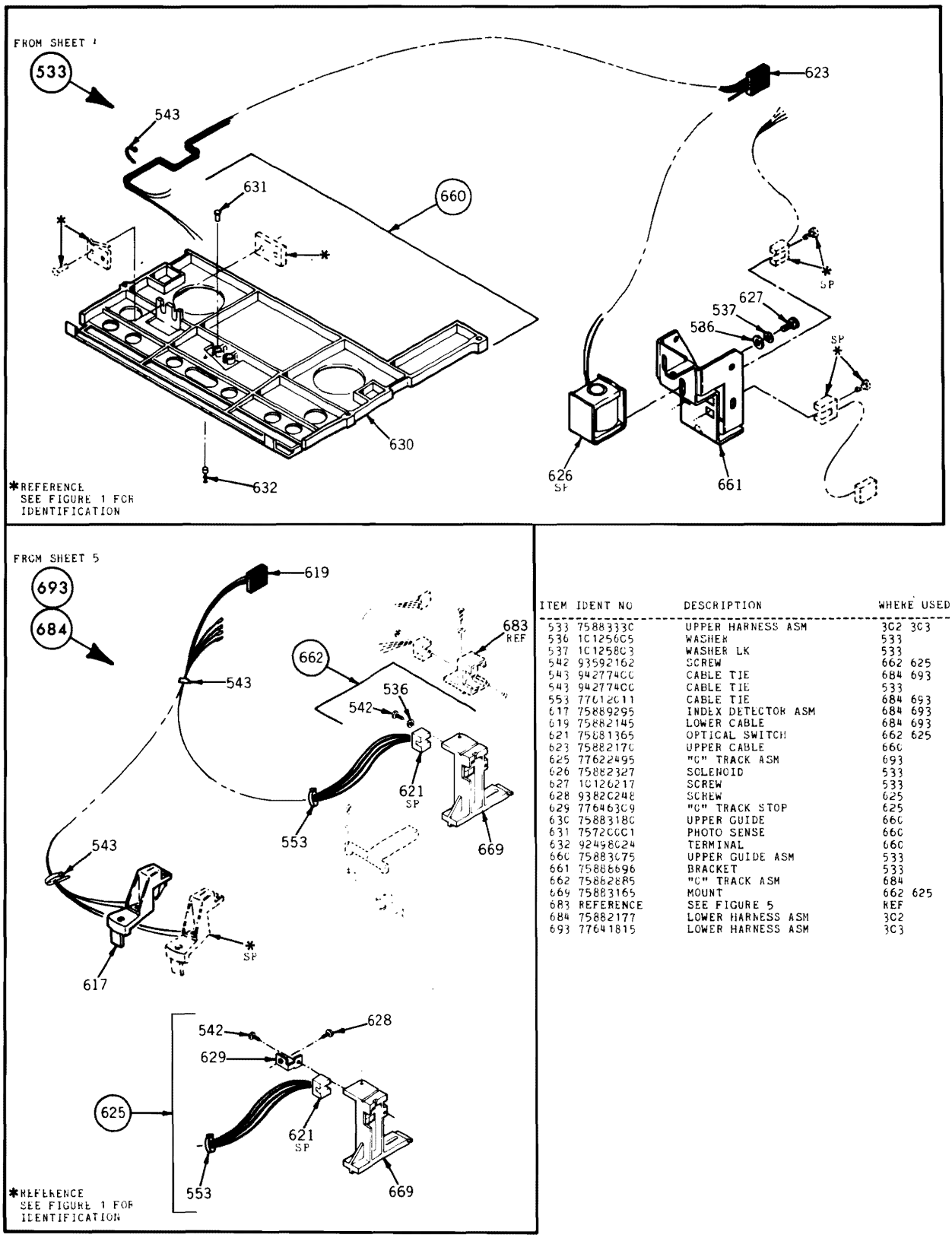

ITEM	IDENT NO	DESCRIPTION	WHERE USED
533	75888333C	UPPER HARNESS ASM	3C2 3C3
536	1C1256C5	WASHER	533
537	1C1258C3	WASHER LK	533
542	93592162	SCREW	662 625
543	942774CC	CABLE TIE	684 693
543	942774CC	CABLE TIE	533
553	77612C11	CABLE TIE	684 693
617	75889295	INDEX DETECTOR ASM	684 693
619	75882145	LOWER CABLE	684 693
621	75881365	OPTICAL SWITCH	662 625
623	75882170	UPPER CABLE	660
625	77622495	"C" TRACK ASM	693
626	75882327	SOLENOID	533
627	1C1262I7	SCREW	533
628	9382C248	SCREW	625
629	77646309	"C" TRACK STOP	625
630	75883180	UPPER GUIDE	660
631	7572CCC1	PHOTO SENSE	660
632	92458024	TERMINAL	660
660	75883075	UPPER GUIDE ASM	533
661	75886696	BRACKET	533
662	75862885	"C" TRACK ASM	684
669	75883165	MOUNT	662 625
683	REFERENCE	SEE FIGURE 5	REF
684	75882177	LOWER HARNESS ASM	3C2
693	77641815	LOWER HARNESS ASM	3C3

FIGURE 8-7. HARNESS ASSEMBLIES

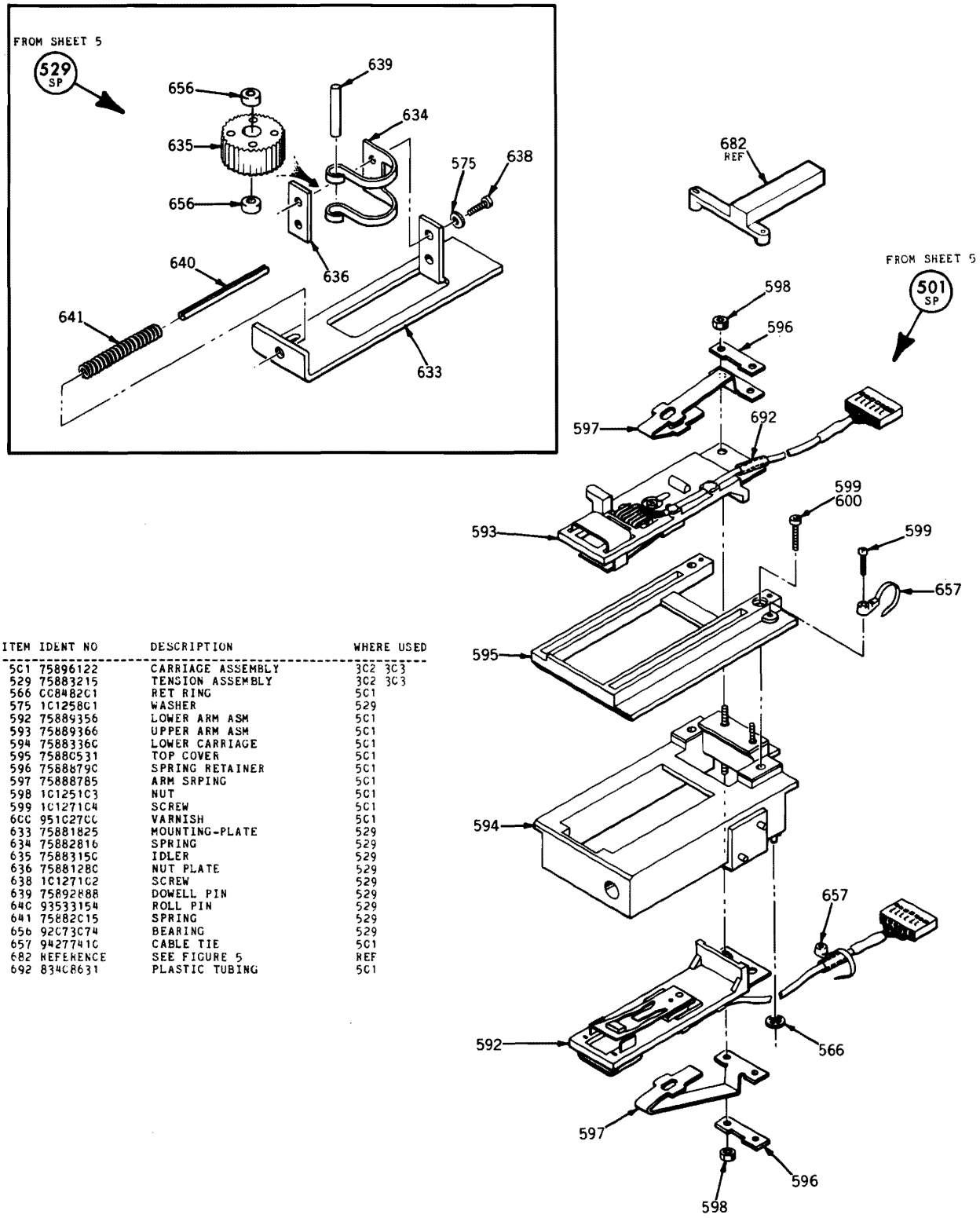

ITEM	IDENT NO	DESCRIPTION	WHERE USED
5C1	75896122	CARRIAGE ASSEMBLY	3C2 3C3
529	75883215	TENSION ASSEMBLY	3C2 3C3
566	CC8482C1	RET RING	5C1
575	1C1258C1	WASHER	529
592	75889356	LOWER ARM ASM	5C1
593	75889366	UPPER ARM ASM	5C1
594	75883360	LOWER CARRIAGE	5C1
595	75880531	TOP COVER	5C1
596	75888790	SPRING RETAINER	5C1
597	75888785	ARM SRPING	5C1
598	1C1251C3	NUT	5C1
599	1C1271C4	SCREW	5C1
600	951C270C	VARNISH	5C1
633	75881825	MOUNTING-PLATE	529
634	75882816	SPRING	529
635	75883150	IDLER	529
636	75881280	NUT PLATE	529
638	1C1271C2	SCREW	529
639	75892888	DOWELL PIN	529
640	93533154	ROLL PIN	529
641	75882C15	SPRING	529
656	92C73C74	BEARING	529
657	9427741C	CABLE TIE	5C1
682	REFERENCE	SEE FIGURE 5	REF
692	834C8631	PLASTIC TUBING	5C1

FIGURE 8-8. CARRIAGE AND TENSION ASSEMBLIES

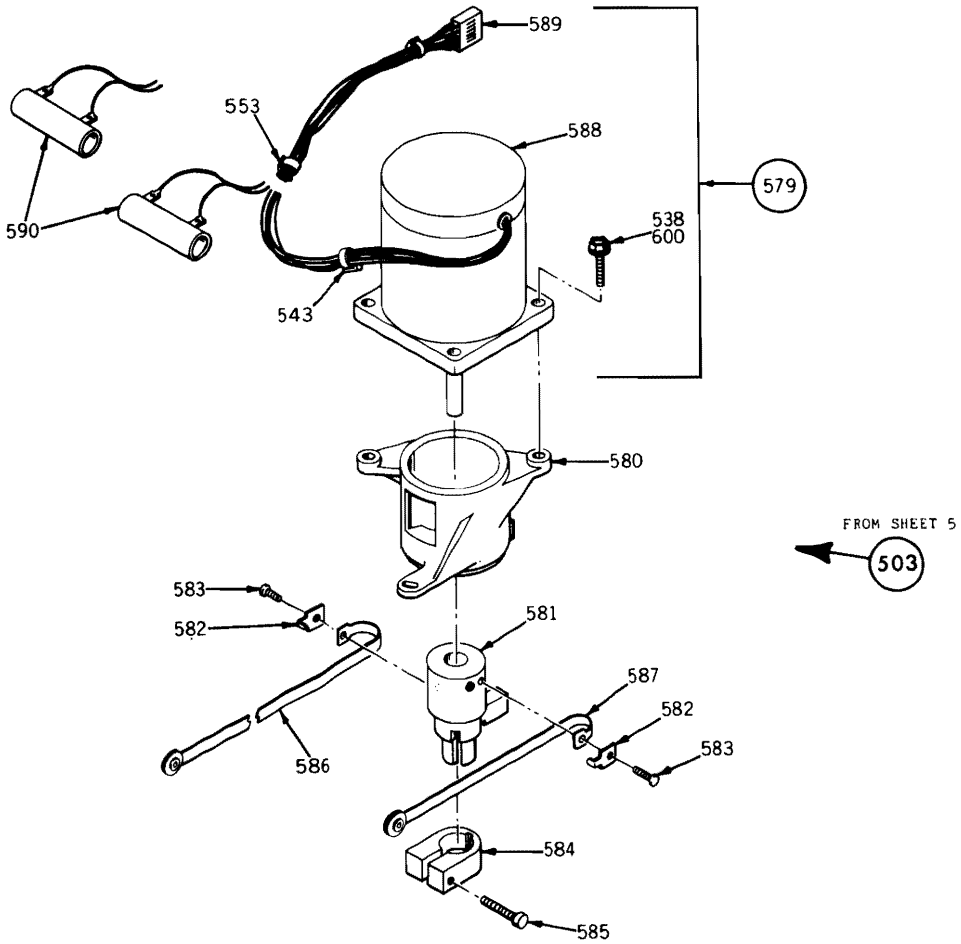

ITEM	IDENT NO	DESCRIPTION	WHERE USED
5C3	75892C07	ACTUATOR ASSEMBLY	3C2 3C3
532	75889396	EJECTOR ASM	3C2 3C3
538	93592164	SCREW	5C3
543	942774CC	CABLE TIE	579
553	77612C11	CABLE TIE	579
566	CC8482C1	RET RING	532
566	CC8482C1	RET RING	532
579	75881932	STEPPER MOTOR ASM	5C3
58C	75881563	MOTOR ADAPTER	5C3
581	75881441	PULLEY	5C3
582	75881785	BAND RETAINER	5C3
583	75882C26	SCREW	5C3
584	75881287	CLAMP	5C3
585	18862716	SCREW	5C3
586	7588312C	BAND	5C3
587	7588E3121	BAND	5C3
588	7588215C	STEPPER MOTOR	579
589	75883312	RESISTOR CABLE	579
59C	77612491	RESISTOR	579
6CC	951C27CC	VARNISH	5C3
643	7589C856	LATCH	532
644	7589355C	SPRING	532
646	75881575	SPRING	532
659	75893269	EJECTOR	532

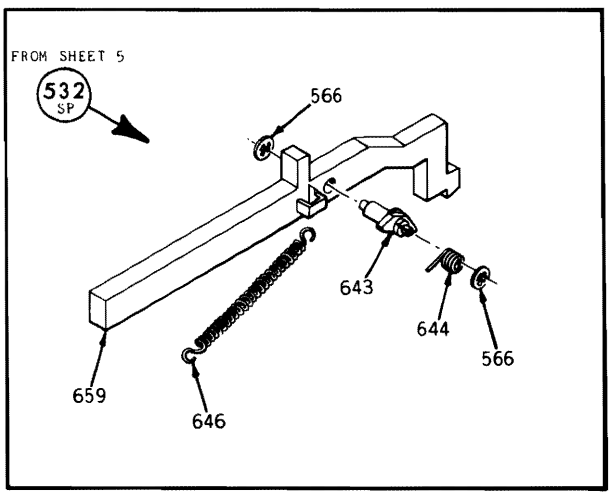

FIGURE 8-9. ACTUATOR AND EJECTOR ASSEMBLIES

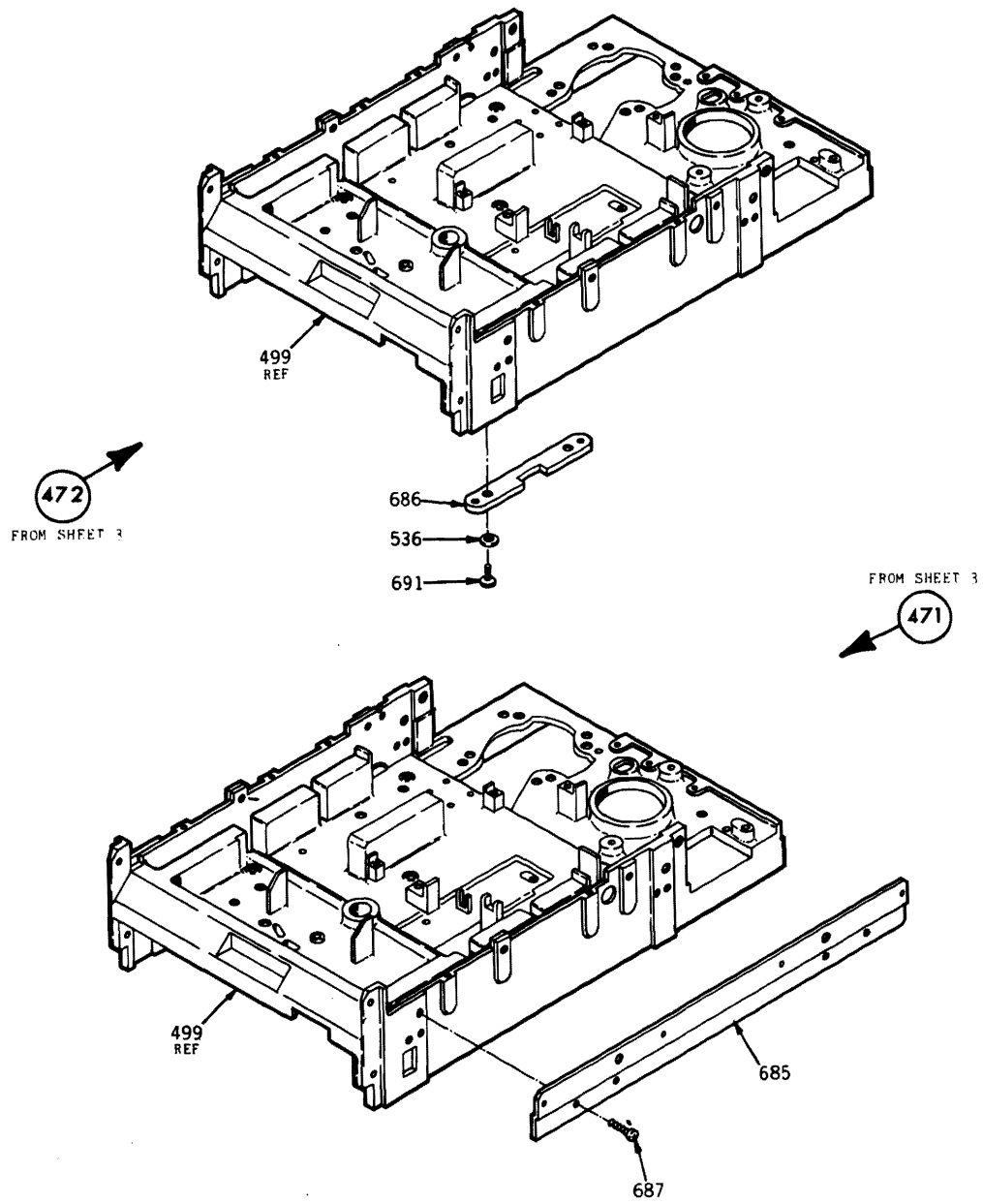

ITEM	IDENT NO	DESCRIPTION	WHERE USED
471	75883338	KIT, SIDE MTG	HPC
472	75894197	KIT, BOTTOM MTG	HPC
499	REFERENCE	SEE FIGURE 2	REF
536	10125605	WASHER	472
685	10127122	SCREW	471
686	75881607	ADAPTER	472
687	75883001	ADAPTER	471
691	18862716	SCREW	472

FIGURE 8-10. FEATURE KITS

8.6 PARTS LIST INSTRUCTIONS

8.6.1 ILLUSTRATION PARTS LISTS

The parts list for each illustration is an extract from the Top-Down Assembly/ Component Parts list and contains only those parts depicted. Refer to paragraph 8.6.2 for explanation of parts list.

8.6.2 TOP-DOWN ASSEMBLY/COMPONENT PARTS LIST

a. Starts at HPC level and lists all parts in Item Number sequence.
b. Correlates Item numbers with part Identification numbers and the Description of each.
c. Identifies where each part is used (where used column) within the device by listing the item number(s) of the next higher assembly.

NOTE

Items 300 through 499 will carry "HPC" in the "Where Used" column. Items shown for reference only will carry "REF."

d. Defines the location of each part by listing the sheet number(s) where depicted.

NOTE

The same part may be used in any number of assemblies or sheet locations.

8.6.3 CROSS REFERENCE INDEX

a. Lists all parts in numeric sequence (by Identification Number).
b. In conjunction with the referenced sheet number (third column) and illustrations, defines the physical location of each item identified.

8.6.4 SHEET NUMBER REFERENCING

Sheet numbers referenced on Parts Lists and Illustrations refers to sheet locations in this section. Example: Sheet reference 3 represents sheet 8-3, sheet 4 represents sheet 8-4, etc.

TOP-DOWN ASSEMBLY/COMPONENT PART LIST

ITEM	IDENT NO	DESCRIPTION	WHERE USED	SHEET
302	75896102	TOP MECHANICAL ASM	HPC	S05
302	75896102	TOP MECHANICAL ASM	HPC	S04
302	75896102	TOP MECHANICAL ASM	HPC	S03
303	75896103	TOP MECHANICAL ASM	HPC	S03
303	75896103	TOP MECHANICAL ASM	HPC	S05
303	75896103	TOP MECHANICAL ASM	HPC	S04
308	77650890	LATCH ASM	HPC	S03
309	75883185	LATCH ASM	HPC	S03
310	77650889	LATCH ASM	HPC	S03
350	75882589	DRIVE MOTOR ASM 60-120	HPC	S03
350	75882589	DRIVE MOTOR ASM 60-120	HPC	S06
351	75882592	DRIVE MOTOR ASM 50-220	HPC	S03
351	75882592	DRIVE MOTOR ASM 50-220	HPC	S06
352	75882591	DRIVE MOTOR ASM 60-220	HPC	S03
352	75882591	DRIVE MOTOR ASM 60-220	HPC	S06
353	75882855	DRIVE MOTOR ASM 60-120	HPC	S03
353	75882855	DRIVE MOTOR ASM 60-120	HPC	S06
354	75882858	DRIVE MOTOR ASM 50-220	HPC	S03
354	75882858	DRIVE MOTOR ASM 50-220	HPC	S06
355	75882856	DRIVE MOTOR ASM 50-120	HPC	S03
355	75882856	DRIVE MOTOR ASM 50-120	HPC	S06
356	75882857	DRIVE MOTOR ASM 60-220	HPC	S03
356	75882857	DRIVE MOTOR ASM 60-220	HPC	S06
399	77581102	CLAMSHELL (BLACK)	HPC	S03
400	77618401	CLAMSHELL (BLACK)	HPC	S03
401	75889426	CLAMSHELL ASM	HPC	S03
401	75889426	CLAMSHELL ASM	HPC	S09
402	75897401	CLAMSHELL ASM	HPC	S03
402	75897401	CLAMSHELL ASM	HPC	S09
403	77581106	CLAMSHELL (BROWN)	HPC	S03
404	77618428	CLAMSHELL (WHITE)	HPC	S03
405	77618429	CLAMSHELL (BRONZE)	HPC	S03
409	77899329	FRONT PANEL	HPC	S03
410	75899301	FRONT PANEL (BLACK)	HPC	S03
411	77631302	FRONT PANEL (BLACK)	HPC	S03
412	77631402	FRONT PANEL (BLACK)	HPC	S03
413	77631406	FRONT PANEL (BROWN)	HPC	S03
414	75889328	FRONT PANEL (WHITE)	HPC	S03
415	75881578	SPRING	HPC	S03
420	75889701	BUTTON (BLACK)	HPC	S03
421	75897201	BUTTON (BLACK)	HPC	S03
422	75897206	BUTTON (BROWN)	HPC	S03
423	75889728	BUTTON (WHITE)	HPC	S03
424	75889729	BUTTON	HPC	S03
430	75882401	FRONT PANEL ASM	HPC	S07
430	75882401	FRONT PANEL ASM	HPC	S03
431	75882406	FRONT PANEL ASM	HPC	S07
431	75882406	FRONT PANEL ASM	HPC	S03
432	75882405	FRONT PANEL ASM	HPC	S07
432	75882405	FRONT PANEL ASM	HPC	S03
433	75882404	FRONT PANEL ASM	HPC	S07
433	75882404	FRONT PANEL ASM	HPC	S03
434	75897950	FRONT PANEL ASM	HPC	S07
434	75897950	FRONT PANEL ASM	HPC	S03
435	75897951	FRONT PANEL ASM	HPC	S07
435	75897951	FRONT PANEL ASM	HPC	S03
436	75897952	FRONT PANEL ASM	HPC	S07
436	75897952	FRONT PANEL ASM	HPC	S03
437	75897953	FRONT PANEL ASM	HPC	S07
437	75897953	FRONT PANEL ASM	HPC	S03
440	75882037	WRITE PROTECT	HPC	S08
440	75882037	WRITE PROTECT	HPC	S03
441	75882036	DISK IN PLACE DET	HPC	S08
441	75882036	DISK IN PLACE DET	HPC	S03
450	75882185	INDEX DETECTOR KIT	HPC	S08
450	75882185	INDEX DETECTOR KIT	HPC	S03
460	75889979	DOOR INTERLOCK KIT	HPC	S06
460	75889979	DOOR INTERLOCK KIT	HPC	S03
470	75883335	KIT, TK "43"	HPC	S08
470	75883335	KIT, TK "43"	HPC	S03
471	75883336	KIT, SIDE MTG	HPC	S13
471	75883336	KIT, SIDE MTG	HPC	S03
472	75894197	KIT, BOTTOM MTG	HPC	S13
472	75894197	KIT, BOTTOM MTG	HPC	S03
499	75883128	BASE (MACHINED)	302 303	S05
499	75883128	BASE (MACHINED)	302 303	S04
499	REFERENCE	SEE FIGURE 2	REF	S13
499	REFERENCE	SEE FIGURE 2	REF	S08
501	75896122	CARRIAGE ASSEMBLY	302 303	S05
501	75896122	CARRIAGE ASSEMBLY	302 303	S11
501	REFERENCE	SEE FIGURE 2 & 8	REF	S08
502	75881591	SPINDLE	302 303	S04
503	75892007	ACTUATOR ASSEMBLY	302 303	S12
503	75892007	ACTUATOR ASSEMBLY	302 303	S05
506	75888675	BALL ASM	302 303	S04
507	75882136	LOAD PLATE ASM	302 303	S04
507	75882136	LOAD PLATE ASM	302 303	S09
508	75881326	GUIDE CARRIAGE	302 303	S05
509	75881275	GUIDE ROD	302 303	S05
510	77646600	PULLEY-SPINDLE	302 303	S04
512	77613697	BEARING, FLANGED	302 303	S04
513	93529005	WASHER-SPRING WAVE	302 303	S04
515	75883017	RETAINER	302 303	S05
516	75888590	HINGE PIN	302 303	S04
517	75888591	HINGE PIN	302 303	S04
518	75888595	PIN	302 303	S04
519	75890210	PIN, HITCH	302 303	S04
520	75890211	PIN, HITCH	302 303	S04
521	75888570	SPRING, CLAMSHELL	302 303	S04
523	75293203	BELT-FLAT	302 303	S04
524	75883240	LATCH BLOCK	302 303	S05
525	75882331	SOLENOID ASM	434 435	S07
528	75883095	GUARD, HEAD CABLE	302 303	S05
529	75883215	TENSION ASSEMBLY	302 303	S05
529	75883215	TENSION ASSEMBLY	302 303	S11
530	75774732	CLIP-PUSH IN	302 303	S05
531	75774736	CLIP-PUSH IN	302 303	S05
532	75889396	EJECTOR ASM	302 303	S05
532	75889396	EJECTOR ASM	302 303	S12
533	75883330	UPPER HARNESS ASM	302 303	S04
533	REFERENCE	SEE FIGURES 2 & 7	REF	S08
533	75883330	UPPER HARNESS ASM	302 303	S10
534	09023703	SCREW	302 303	S05
535	10127734	SCREW	302 303	S04
536	10125605	WASHER	302 303	S05
536	10125605	WASHER	302 303	S04
536	10125605	WASHER	450	S08
536	10125605	WASHER	533	S10
536	10125605	WASHER	472	S13
537	10125803	WASHER LK	533	S10
537	10125803	WASHER LK	302 303	S04
538	93592164	SCREW	450	S08
538	93592164	SCREW	503	S12
538	93592164	SCREW	302 303	S05
538	93592164	SCREW	302 303	S04
539	17901504	SCREW	302 303	S04
540	75806502	WASHER	432-435	S07
540	75806502	WASHER	470	S08
541	18862916	SCREW	302 303	S05
542	93592162	SCREW	662 625	S10
542	93592162	SCREW	654	S06
542	93592162	SCREW	302 303	S05
542	93592162	SCREW	302 303	S04
542	93592162	SCREW	470	S08
543	94277400	CABLE TIE	302 303	S04
543	94277400	CABLE TIE	684 693	S10
543	94277400	CABLE TIE	579	S12
543	94277400	CABLE TIE	350-356	S06
543	94277400	CABLE TIE	533	S10
544	93592202	SCREW	350-356	S06
545	10126401	WASHERS	302 303	S04
546	75731302	ELECTRICAL SYMBOL	302 303	S04
547	92012727	SCREW	302 303	S04
548	10126104	WASHER	350-356	S06
549	75738402	CAPACITOR	350 353	S06
549	75738402	CAPACITOR	355	S06
551	62121108	TERMINAL	350-356	S06
552	83435504	CONTACT	353	S06
553	77612011	CABLE TIE	684 693	S10
553	77612011	CABLE TIE	579	S12
554	16439600	MOUNTING BRKT	350-356	S06
555	75882341	CABLE	350-352	S06
556	75882490	BRACKET	350-352	S06
557	75882332	SOLENOID ASM	432	S07
558	77636695	SOLENOID MOUNT	432	S07
559	75738480	CAPACITOR	351 352	S06
559	75738480	CAPACITOR	354 356	S06
560	83435501	CONTACT	350-352	S06
560	83435501	CONTACT	354-356	S06
561	75726925	MOTOR	350 353	S06
561	75726925	MOTOR	355	S06
562	75726924	MOTOR	351 352	S06
562	75726924	MOTOR	354 356	S06
563	75896006	PULLEY-DUAL DR	350-356	S06
564	83413405	SCREW	350-356	S06
565	75293954	HOUSING	431-437	S07
565	75293954	HOUSING	441	S08
566	00848201	RET RING	501	S11
566	00848201	RET RING	532	S12
566	00848201	RET RING	532	S12
566	00848201	RET RING	431-437	S07
567	94277400	CABLE TIE	431-433	S07
568	75882330	SOLENOID ASM	433	S07
569	77632960	SOLENOID MOUNT	433-435	S07
570	75888600	SHAFT LOCK	432 433	S07
571	75882035	SPRING	432 433	S07
572	92033147	RET RING	432 433	S07
573	75882107	WASHER	432 433	S07
574	94376917	SCREW	432-435	S07
575	10125801	WASHER	432-435	S07
575	10125801	WASHER	529	S11
576	75882335	CABLE	431-437	S07
577	75810701	LED	431-433	S07
578	75810703	RET RING	431-433	S07
579	75881932	STEPPER MOTOR ASM	503	S12
580	75881563	MOTOR ADAPTER	503	S12
581	75881441	PULLEY	503	S12
582	75881785	BAND RETAINER	503	S12
583	75882026	SCREW	503	S12
584	75881287	CLAMP	503	S12
585	18862716	SCREW	503	S12
586	75883120	BAND	503	S12
587	75883121	BAND	503	S12
588	75882150	STEPPER MOTOR	579	S12
589	75883312	RESISTOR CABLE	579	S12
590	77612491	RESISTOR	579	S12
591	93820166	SET SCREW	432	S07
592	75889356	LOWER ARM ASM	501	S11
593	75889366	UPPER ARM ASM	501	S11
594	75883360	LOWER CARRIAGE	501	S11
595	75880531	TOP COVER	501	S11
596	75888790	SPRING RETAINER	501	S11
597	75888785	ARM SRPING	501	S11
598	10125103	NUT	501	S11
599	10127104	SCREW	501	S11
600	95102700	VARNISH	501	S11
600	95102700	VARNISH	503	S12
601	75888650	LOAD PLATE	507	S09
602	75882038	FOAM	507	S09
603	75882348	SPRING	507	S09

TOP-DOWN ASSEMBLY/COMPONENT PART LIST

ITEM	IDENT NO	DESCRIPTION	WHERE USED	SHEET
604	75881895	CONE ASM	401 402	S09
605	75882017	COMPRESSION SPRING	401 402	S09
606	93564057	WASHER	401 402	S09
607	92033087	RET RING	401 402	S09
608	93820782	SCREW	401 402	S09
610	75881715	CONE	604	S09
611	75881892	BEARING	604	S09
612	75888607	SHAFT	604	S09
613	75888610	RETAINER	604	S09
614	75881710	SPACER	604	S09
615	75882016	COMPRESSION SPRING	604	S09
615	75882016	COMPRESSION SPRING	604	S09
616	77610637	SCREW	604	S09
616	77610637	SCREW	604	S09
617	75889295	INDEX DETECTOR ASM	450	S08
617	75889295	INDEX DETECTOR ASM	684 693	S10
618	77612981	LIGHT EMITTING DIODE	434-437	S07
619	75882145	LOWER CABLE	684 693	S10
620	77610030	DOWEL PIN	434-437	S07
621	75881365	OPTICAL SWITCH	662 625	S10
621	75881365	OPTICAL SWITCH	470	S08
622	10127311	SCREW	440 441	S08
623	75882170	UPPER CABLE	660	S10
624	10126101	LOCK WASHER	302 303	S05
625	REFERENCE	SEE FIGURE 5	REF	S08
625	77622495	"O" TRACK ASM	693	S10
626	75882327	SOLENOID	533	S10
627	10126217	SCREW	533	S10
628	93820248	SET SCREW	401 402	S09
628	93820248	SCREW	625	S10
629	77646309	"O" TRACK STOP	625	S10
630	75883180	UPPER GUIDE	660	S10
631	75720001	PHOTO SENSE	660	S10
632	92498024	TERMINAL	660	S10
633	75881825	MOUNTING-PLATE	529	S11
634	75882816	SPRING	529	S11
635	75883150	IDLER	529	S11
636	75881280	NUT PLATE	529	S11
637	75899167	SPRING	430-433	S07
638	10127102	SCREW	432-435	S07
638	10127102	SCREW	529	S11
639	75892888	DOWEL PIN	529	S11
640	93533154	ROLL PIN	529	S11
641	75882015	SPRING	529	S11
642	77646804	BUMPER	434-437	S07
643	75890856	LATCH	532	S12
644	75893550	SPRING	532	S12
646	75881575	SPRING	532	S12
647	75880751	SWITCH	460	S08
648	75889215	NUT PLATE	460	S08
649	10127169	SCREW	460	S08
650	75899166	SPRING	434-437	S07
651	75881363	OPTICAL SWITCH ASM	440	S08
652	75881364	OPTICAL SWITCH	441	S08
654	75882895	LIFTER ASM	302 303	S06
654	75882895	LIFTER ASM	302 303	S04
656	92073074	BEARING	529	S11
657	94277410	CABLE TIE	501	S11
658	75883338	BUMPER	431-433	S07
659	75893269	EJECTOR	532	S12
660	REFERENCE	SEE FIGURE 7	REF	S08
660	75883075	UPPER GUIDE ASM	533	S10
661	75888696	BRACKET	533	S10
662	75882885	"O" TRACK ASM	684	S10
662	REFERENCE	SEE FIGURE 5	REF	S08
663	75882740	COVER	654	S06
664	75882735	CYLINDER	654	S06
665	77658915	PISTON	654	S06
666	75882725	ROLLER	654	S06
667	77658910	SPRING	654	S06
668	92021009	PIN	654	S06
669	75883165	MOUNT	662 625	S10
671	75883023	CABLE	355	S06
671	75883023	CABLE	353 354	S06
672	75882890	BRACKET	355	S06
672	75882890	BRACKET	353 354	S06
677	10127105	SCREW	470	S08
678	10127167	SCREW	470	S08
679	10125102	NUT	470	S08
681	75882880	HOUSING	470	S08
682	REFERENCE	SEE FIGURE 5	REF	S11
682	75882813	FLAG	470	S08
683	REFERENCE	SEE FIGURE 5	REF	S10
683	75883196	SENSOR ASM, TK "43"	470	S08
684	REFERENCE	SEE FIGURES 2 & 7	REF	S08
684	75882177	LOWER HARNESS ASM	302	S10
684	75882177	LOWER HARNESS ASM	302	S05
685	10127122	SCREW	471	S13
686	75881007	ADAPTER	472	S13
687	75883001	ADAPTER	471	S13
688	51891120	PLUG BUTTON	302 303	S04
689	75896400	LABEL	302 303	S04
690	75897601	CABLE GUARD	302 303	S05
691	10126216	SCREW	472	S13
692	83406631	PLASTIC TUBING	501	S11
693	77641815	LOWER HARNESS ASM	303	S05
693	77641815	LOWER HARNESS ASM	303	S10

CROSS REFERENCE INDEX

ITEM	IDENT NO	SHEET
399	77581102	S03
566	00848201	S07
566	00848201	S12
566	00848201	S12
566	00848201	S11
534	09023703	S05
679	10125102	S08
598	10125103	S11
536	10125605	S10
536	10125605	S13
536	10125605	S05
536	10125605	S04
536	10125605	S08
575	10125801	S11
575	10125801	S07
537	10125803	S10
537	10125803	S04
624	10126101	S05
548	10126104	S06
627	10126217	S10
545	10126401	S04
638	10127102	S07
638	10127102	S11
599	10127104	S11
677	10127105	S08
685	10127122	S13
678	10127167	S08
649	10127169	S08
622	10127311	S08
535	10127334	S04
554	16439600	S06
539	17901504	S04
691	18862716	S13
585	18862716	S12
541	18862916	S05
686	51891120	S04
551	62121108	S06
523	75293203	S04
565	75293954	S07
565	75293954	S08
631	75720001	S10
562	75726924	S06
562	75726924	S06
561	75726925	S06
561	75726925	S06
546	75731302	S04
549	75738402	S06
549	75738402	S06
559	75738480	S06
559	75738480	S06
530	75774732	S05
531	75774736	S05
540	75806502	S07
540	75806502	S08
577	75810701	S07
578	75810703	S07
595	75880531	S11
647	75880751	S08
509	75881275	S05
636	75881280	S11
584	75881287	S12
506	75881326	S05
651	75881363	S08
652	75881364	S08
621	75881365	S10
621	75881365	S08
581	75881441	S12
580	75881563	S12
646	75881575	S12
415	75881578	S03
502	75881591	S04
686	75881607	S13
614	75881710	S09
610	75881715	S09
582	75881785	S12
633	75881825	S11
611	75881892	S09
604	75881895	S09
579	75881932	S12
641	75882015	S11
615	75882016	S09
615	75882016	S09
605	75882017	S09
583	75882026	S12
571	75882035	S07
441	75882036	S03
441	75882036	S08
440	75882037	S03
440	75882037	S08
602	75882038	S09
573	75882107	S07
507	75882136	S09
507	75882136	S04
619	75882145	S10
588	75882150	S12
623	75882170	S10
684	75882177	S05
684	75882177	S10
450	75882185	S08
450	75882185	S03
626	75882327	S10
568	75882330	S07
525	75882331	S07
557	75882332	S07
576	75882335	S07

ITEM	IDENT NO	SHEET
555	75882341	S06
603	75882348	S09
430	75882401	S03
430	75882401	S07
433	75882404	S03
433	75882404	S07
432	75882405	S03
432	75882405	S07
431	75882406	S03
431	75882406	S07
556	75882490	S06
682	75882513	S08
350	75882589	S06
350	75882589	S03
352	75882591	S06
352	75882591	S03
351	75882592	S06
351	75882592	S03
666	75882725	S06
664	75882735	S06
663	75882740	S06
634	75882816	S11
353	75882855	S03
353	75882855	S06
355	75882856	S03
355	75882856	S06
356	75882857	S03
356	75882857	S06
354	75882858	S06
354	75882858	S03
681	75882880	S08
662	75882885	S10
672	75882890	S06
672	75882890	S06
654	75882895	S06
654	75882895	S04
687	75883001	S13
515	75883017	S05
671	75883023	S06
671	75883023	S06
660	75883075	S10
528	75883095	S05
586	75883120	S12
587	75883121	S12
499	75883128	S04
499	75883128	S05
635	75883150	S11
669	75883165	S10
630	75883180	S10
309	75883185	S03
683	75883196	S08
529	75883215	S11
529	75883215	S05
524	75883240	S05
589	75883312	S12
533	75883330	S04
533	75883330	S10
470	75883335	S08
470	75883335	S03
471	75883336	S13
471	75883336	S03
658	75883338	S07
594	75883360	S11
521	75888570	S04
516	75888590	S04
517	75888591	S04
518	75888595	S04
570	75888600	S07
612	75888607	S09
613	75888610	S09
601	75888650	S09
506	75888675	S04
661	75888696	S10
597	75888785	S11
596	75888790	S11
648	75889215	S08
617	75889295	S10
617	75889295	S08
414	75889328	S03
592	75889356	S11
593	75889366	S11
532	75889396	S05
532	75889396	S12
401	75889426	S03
401	75889426	S09
420	75889701	S03
423	75889728	S03
424	75889729	S03
460	75889979	S03
460	75889979	S08
519	75890210	S04
520	75890211	S04
643	75890856	S12
503	75892007	S12
503	75892007	S05
639	75892888	S11
659	75893269	S12
644	75893550	S12
472	75894197	S03
472	75894197	S13
563	75896006	S06

ITEM	IDENT NO	SHEET
302	75896102	S04
302	75896102	S03
302	75896102	S05
303	75896103	S03
303	75896103	S05
303	75896103	S04
501	75896122	S05
501	75896122	S11
689	75896400	S04
421	75897201	S03
422	75897206	S03
402	75897401	S03
402	75897401	S09
690	75897601	S05
434	75897950	S07
434	75897950	S03
435	75897951	S07
435	75897951	S03
436	75897952	S07
436	75897952	S03
437	75897953	S07
437	75897953	S03
650	75899166	S07
637	75899167	S07
410	75899301	S03
403	77581106	S03
620	77610030	S07
616	77610637	S09
616	77610637	S09
553	77612011	S12
553	77612011	S10
590	77612491	S12
618	77612981	S07
512	77613697	S04
400	77618401	S03
404	77618428	S03
405	77618429	S03
625	77622495	S10
411	77631302	S03
412	77631402	S03
413	77631406	S03
569	77632960	S07
558	77636695	S07
693	77641815	S05
693	77641815	S10
629	77646309	S10
510	77646600	S04
642	77646804	S07
310	77650889	S03
308	77650890	S03
667	77658910	S06
665	77658915	S06
409	77899329	S03
692	83408631	S11
564	83413405	S06
560	83435501	S06
560	83435501	S06
552	83435504	S06
547	92012727	S04
668	92021009	S06
607	92033087	S09
572	92033147	S07
656	92073074	S11
632	92498024	S10
513	93529005	S04
640	93533154	S11
606	93564057	S09
542	93592162	S10
542	93592162	S04
542	93592162	S08
542	93592162	S06
542	93592162	S05
538	93592164	S12
538	93592164	S05
538	93592164	S08
538	93592164	S04
544	93592202	S06
591	93820166	S07
628	93820248	S10
628	93820248	S09
608	93820782	S09
543	94277400	S10
543	94277400	S12
543	94277400	S06
567	94277400	S07
543	94277400	S04
543	94277400	S10
657	94277410	S11
574	94376917	S07
600	95102700	S11
600	95102700	S12
684	REFERENCE	S08
662	REFERENCE	S08
682	REFERENCE	S11
533	REFERENCE	S08
660	REFERENCE	S08
501	REFERENCE	S08
499	REFERENCE	S13
499	REFERENCE	S08
625	REFERENCE	S08
683	REFERENCE	S10

CONVERSION LIST

SERVICE CODE NUMBER	IDENTIFICATION CODE NUMBER	DESCRIPTION
4822 130 30829	94616400-1	DIODE
5322 111 94134	95894500-8	RES PAC 220/330
5322 113 44212	77612491	RESISTOR
5322 124 24195	75738478	CAPACITOR
5322 130 34502	51736700-9	DIODE 1N914A
5322 130 34574	56142000-1	DIODE -SILICOM
5322 130 34636	75720001	PHOTO SENSE
5322 130 44529	77836043-8	TRANSISTOR T1P120
5322 130 44763	77836044-6	TRANSISTOR T1P125
5322 209 54635	77612900-4	IC 5600 ROM32X8
5322 209 80077	66299100-9	IC SN7410N-00
5322 209 80148	39389700-4	IC N7404N
5322 209 80158	88897000-1	IC FCJ 191
5322 209 80234	66299103-3	IC SN7402N-00
5322 209 84073	96744155-1	IC N7406N
5322 209 84165	96744156-9	IC N7474N
5322 209 84201	88885700-0	IC N7486N
5322 209 84285	15158300-2	IC N7438N
5322 209 84528	66299099-3	IC N7400N
5322 209 84671	15105301-5	IC FJB9602
5322 209 84929	17182900-5	IC SN7493AN
5322 209 85025	15163100-9	IC MC1733
5322 209 85556	95794600-7	IC LM339N
5322 209 85577	16161100-1	IC 78M12CU
5322 209 85761	15161800-6	IC LM319N
5322 209 85928	15161600-0	IC 75461
5322 209 85931	77832315-4	IC LM3086
5322 209 86071	83452805-1	IC VOLT REG 78L12AWC
5322 216 25373	77618919	CIRCUIT BOARD
5322 218 74486	75881365	OPTICAL SWITCH
5322 218 74487	75882037	WRITE PROTECT
5322 218 74488	75882185	INDEX DETECTOR KIT
5322 255 44185	94260301-0	CONN.SOCKET
5322 268 44153	75293954	HOUSING
5322 270 14005	83452205-4	SWITCH-8POSITION
5322 281 34093	75882325	SOLENOID
5322 281 34094	75882330	SOLENOID ASM.
5322 358 24104	75293203	BELT-FLAT
5322 360 44041	75882730	PISTON
5322 361 84238	75881932	STEPPER MOTOR ASM
5322 361 84239	75882363	DRIVE MOTOR AS M
5322 395 34036	5112 291 43770	FLEX.DISC DRIVE 9406
5322 405 46353	75889396	EJECTOR ASSY
5322 414 26361	75889702	BUTTON (BLACK)
5322 417 64025	75883185	LATCH ASSY
5322 466 85822	75881430	BAND
5322 466 85823	75881431	BAND
5322 466 85824	75881785	BAND RETAINER
5322 466 85825	75882135	LOAD PLATE ASSY
5322 466 85904	75883120	BAND
5322 466 85905	75883121	BAND
5322 492 34617	75881575	SPRING
5322 492 34618	75882348	SPRING
5322 492 44221	75893550	SPRING
5322 492 54309	75882017	COMPRESSION SPRING
5322 492 54311	75882035	SPRING
5322 492 54312	75883311	SPRING
5322 492 64724	75888570	SPRING,CLAMSHELL
5322 492 64725	75890210	PIN,HITCH
5322 492 64726	75890211	PIN,HITCH

SERVICE CODE NUMBER	IDENTIFICATION CODE NUMBER	DESCRIPTION
5322 492 64784	75883017	RETAINER CLIP
5322 502 24569	75882025	SCREW
5322 502 34144	83413405	SCREW
5322 520 34211	75881441	PULLEY
5322 528 74214	75881591	SPINDLE
-		
5322 528 94248	75882725	ROLLER
5322 530 84089	93529005	WASHER.SPRING WAVE
5322 532 24561	75888165	SPACER
5322 532 54455	92073022	BEARING FLANGED
5322 535 74515	75774732	CLIP.PUSH IN
-		
5322 535 74516	75774736	CLIP-PUSH IN
5322 535 74586	75888595	PIN
5322 535 94928	75882192	ALIGMENT TOOL
5322 535 94929	75888590	HINGE PIN
5322 535 94931	75888591	HINGE PIN
-		
5322 535 94932	92021009	PIN
5322 691 64348	75881895	CONE ASSY
5322 691 64349	75883215	TENSION ASSEMBLY
5322 691 64351	75896122	CARRIAGE ASSEMBLY

WIRE LISTS

9.1 INTRODUCTION

The following paragraphs contain the following wire lists: Upper-Harness Assembly; Lower-Harness Assembly; Stepper Motor; Diskette in Place; Door-Lock-Solenoid Activity LED; Head Assemblies.

9.2 UPPER-HARNESS ASSEMBLY

Wire Color	Origin	Destination	Approximate Length, Inches
Violet	S/S Index Anode	J5-6	15 (381 mm)
Gray	D/S Index Cathode	J5-4	15 (381 mm)
Brown	Contact Door Switch	J5-1	15 (381 mm)
Yellow	N/O Door Switch	J5-2	15 (381 mm)
Orange	Head-Load Solenoid+	J5-3	9 (229 mm)
Black	Head-Load Solenoid-	J5-5	9 (229 mm)
Green	Write-Protect Anode	J5-11	9 (229 mm)
Red	Write-Protect Collector	J5-12	9 (229 mm)
Blue	Write-Protect Emitter	J5-7	9 (229 mm)
White	Write-Protect Cathode	J5-8	9 (229 mm)

9.3 LOWER-HARNESS ASSEMBLY

Wire Color	Origin	Destination	Approximate Length, Inches
Yellow	D/S Index Collector	J6-6	13 (330 mm)
Brown	D/S Index Emitter	J6-9	13 (330 mm)
Orange	S/S Index Collector	J6-5	13 (330 mm)
Black	S/S Index Emitter	J6-10	13 (330 mm)
Green	Anode Track 0	J6-4	9 (229 mm)
White	Cathode Track 0	J6-1	9 (229 mm)
Blue	Emitter Track 0	J6-2	9 (229 mm)
Red	Collector Track 0	J6-3	9 (229 mm)

9.4 STEPPER MOTOR

Wire Color	Origin	Destination	Approximate Length, Inches
Red/White	ØA	J3-5	12 (305 mm)
Green/White	ØB	J3-8	12 (305 mm)
Red	ØD	J3-9	12 (305 mm)
Green	ØC	J3-10	12 (305 mm)
Black	Motor Com (ØA & ØD)	J3-7	12 (305 mm)
White	Motor Com (ØB & ØC)	J3-6	12 (305 mm)
Orange	+R1	J3-3	21 (533 mm)
Yellow	-R1	J3-4	21 (533 mm)
Blue	R1 (Center Tap)	J3-2	20 (508 mm)

9.5 DOOR-LOCK-SOLENOID ACTIVITY LED

Wire Color	Origin	Destination	Approximate Length, Inches
Red	Door-Lock Solenoid+	J7-1	9 (229 mm)
Black	Door-Lock Solenoid-	J7-4	9 (229 mm)
Brown	Activity LED Anode	J7-2	9 (229 mm)
Blue	Activity LED Cathode	J7-3	9 (229 mm)

9.6 HEAD ASSEMBLIES

HEAD 0

Wire Color	Origin	Destination
Black	Read/Write	J2-1
White	Read/Write	J2-2
White (large wire)	Shield	J2-3
Green	Erase+	J2-4
Red	Center Tap	J2-5
-	Key	J2-6
Yellow	Erase-	J2-7

HEAD 1

Wire Color	Origin	Destination
Black	Read/Write	J2-8
White	Read/Write	J2-9
Red	Center Tap	J2-10
Green	Erase+	J2-11
White (large wire)	Shield	J2-12
-	Key	J2-13
Yellow	Erase-	J2-14

Appendix:

The manual is written for the old version of the flexible Disc Drive 1M, with an exception for the schematics, that are intended for the new version. (see pages 5-4 thr. 5.11/12).
To solve discrepancies, the schematics of the old version are added in this appendix.
Moreover, the pin designations, as used in the figures 5.1a thr. 5.1d, and the numbering of the testpoints, as shown on page 6-2, are added for the new version.

J1 PIN CONFIGURATION AND ASSEMBLY USAGE					
FUNCTION NAME	77618919				
-CLOCK SEPARATED					
-DIRECTION (OR) - STEP IN	14				
DISK TYPE	50				
-DOOR UNLOCK-1	42				
-DOOR UNLOCK-2	48				
-DOOR UNLOCK-3					
-DOOR UNLOCK-4					
-ERASE ENABLE	38				
-HEAD LOAD	04				
HEAD SELECT	40				
-INDEX	08				
-LOW CURRENT	10				
-READ DATA COMPOSITE	02				
-READ DATA SEPARATED					
-READY-1	28				
-READY-2	30				
-READY-3	32				
-READY-4	34				
-SECTOR					
-STEP (OR)-STEP OUT	12				
-TRACK 00	06				
-UNIT SELECT-1	20				
-UNIT SELECT-2	22				
-UNIT SELECT-3	24				
-UNIT SELECT-4	26				
-WRITE DATA	18				
-WRITE ENABLE	16				
-WRITE FAULT	44				
+WRITE FAULT					
-WRITE FAULT RESET	46				
-WRITE PROTECT	36				
GROUND	1-49 & 49 ODD NO. ONLY				
+24 VOLT RETURN					
+24 VOLTS					
+5 VOLTS					

XX255a

JUMPER CONFIGURATION																																	
ASSEMBLY NO	W1	W2	W3	W4	W5	W6	W7	W8	W9	W10	W11	W12	W13	W14	W15	W16	W17	W18	W19	W20	W21	W22	W23	W24	W25	W26	W27	W28	W29	W30	W31	W32	W33	W34	W35
77618919			X		X			X			X			X	X	X		X			X				X								X	X	

X255b

Figure 5-2. Schematic (Sheet 1 of 7)

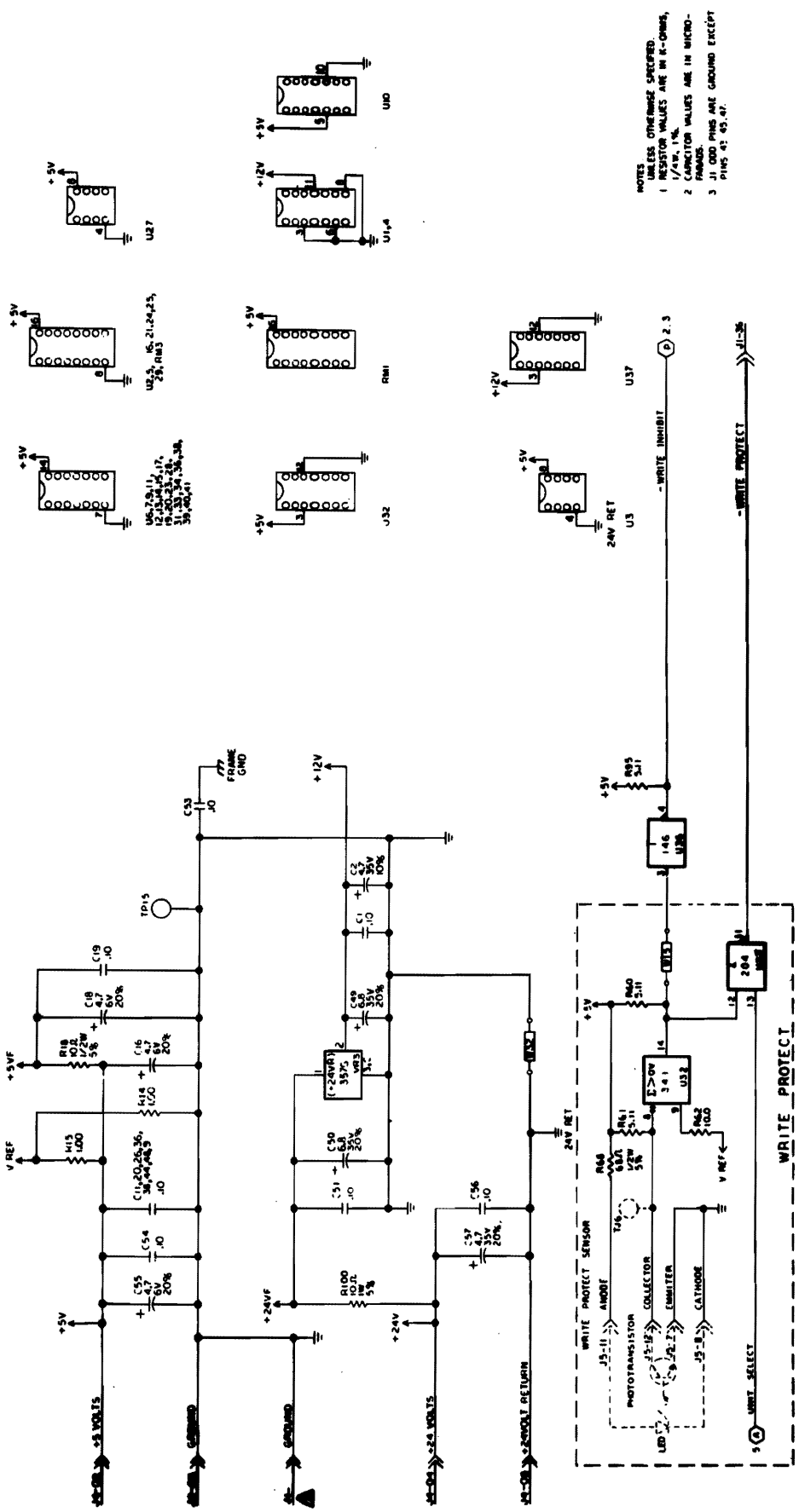

Figure 5-2. Schematics (Sheet 2 of 7)

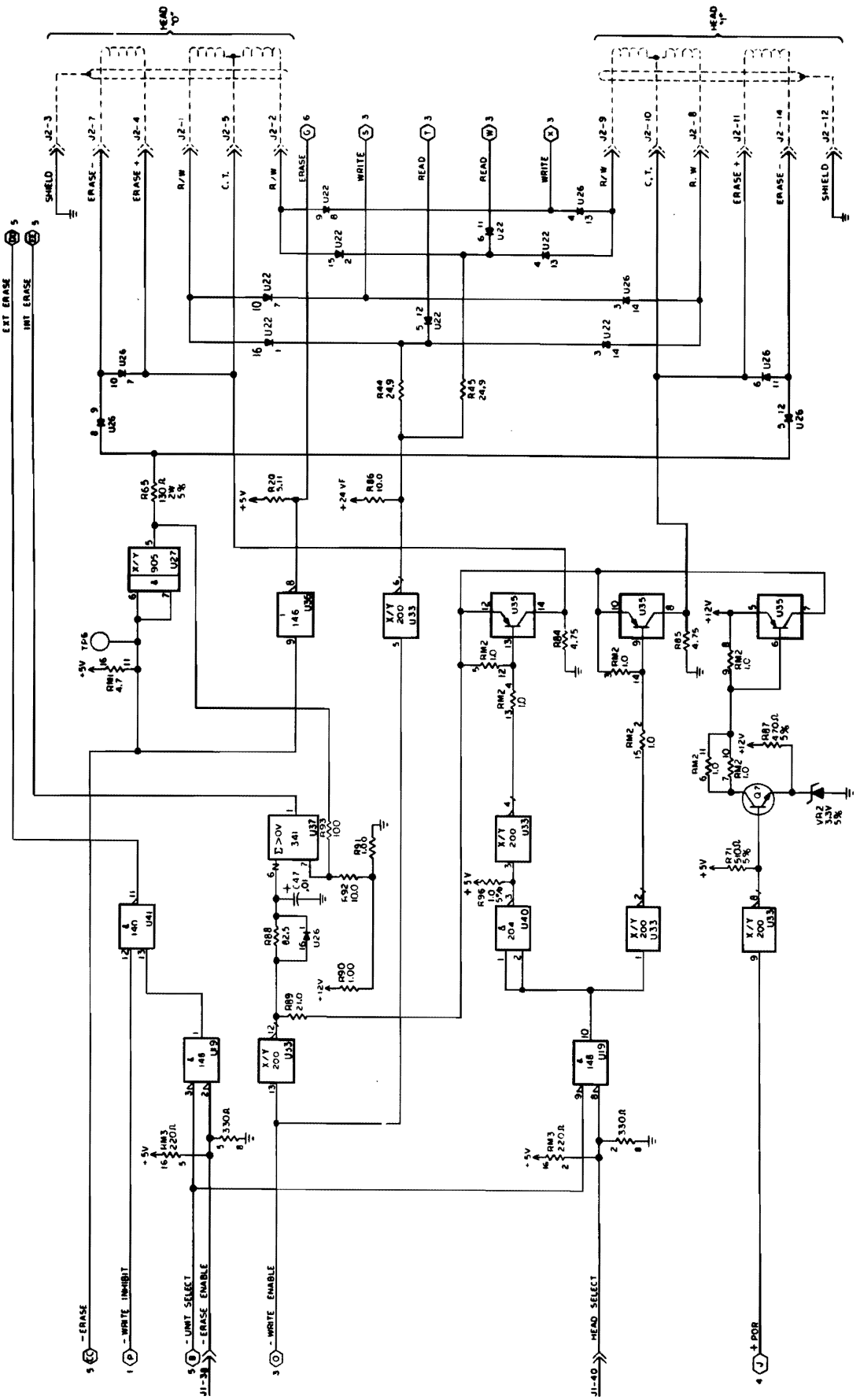

2

Figure 5-2. Schematics (Sheet 3 of 7)

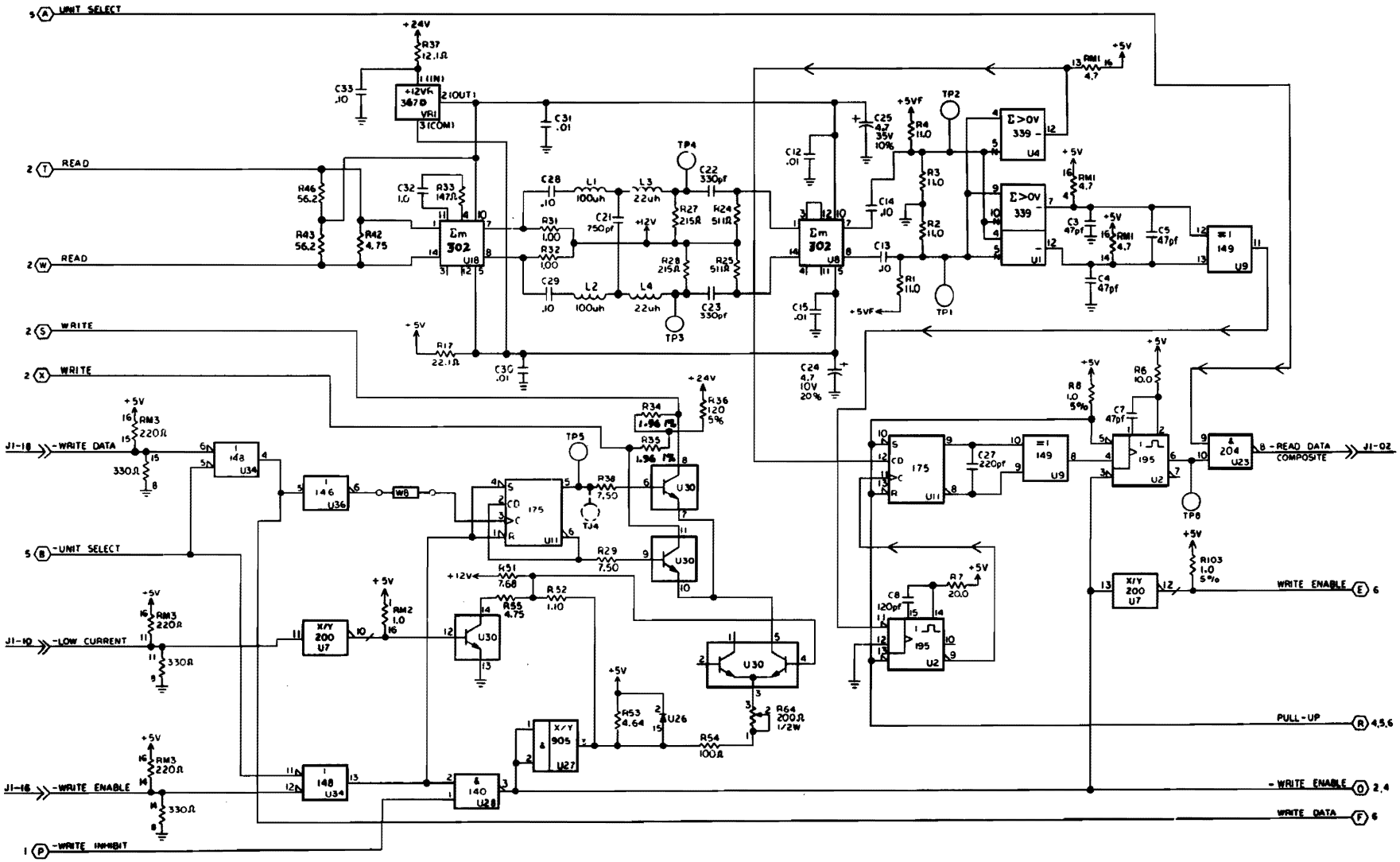

Figure 5-2. Schematics (Sheet 4 of 7)

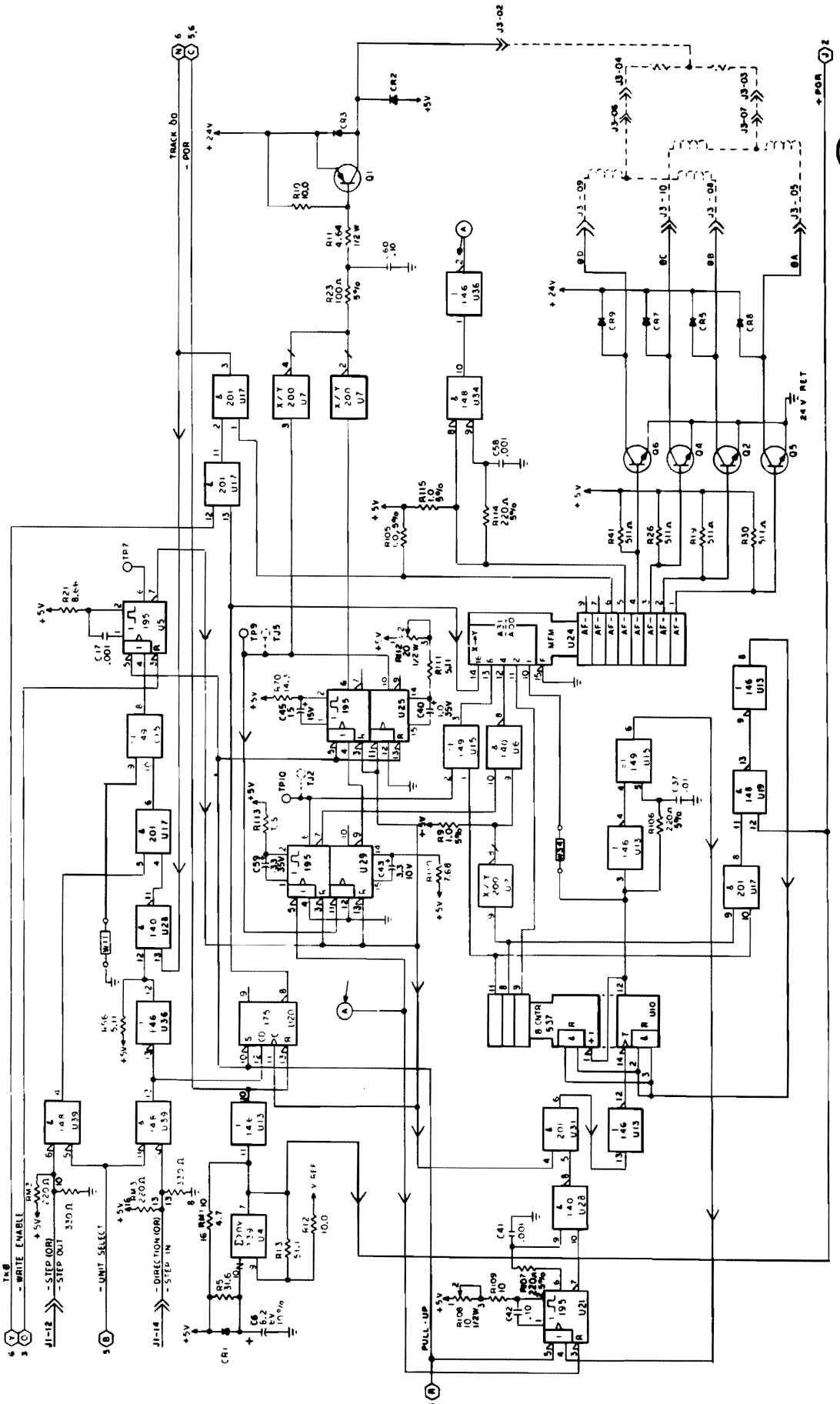

Figure 5-2. Schematics (Sheet 5 of 7)

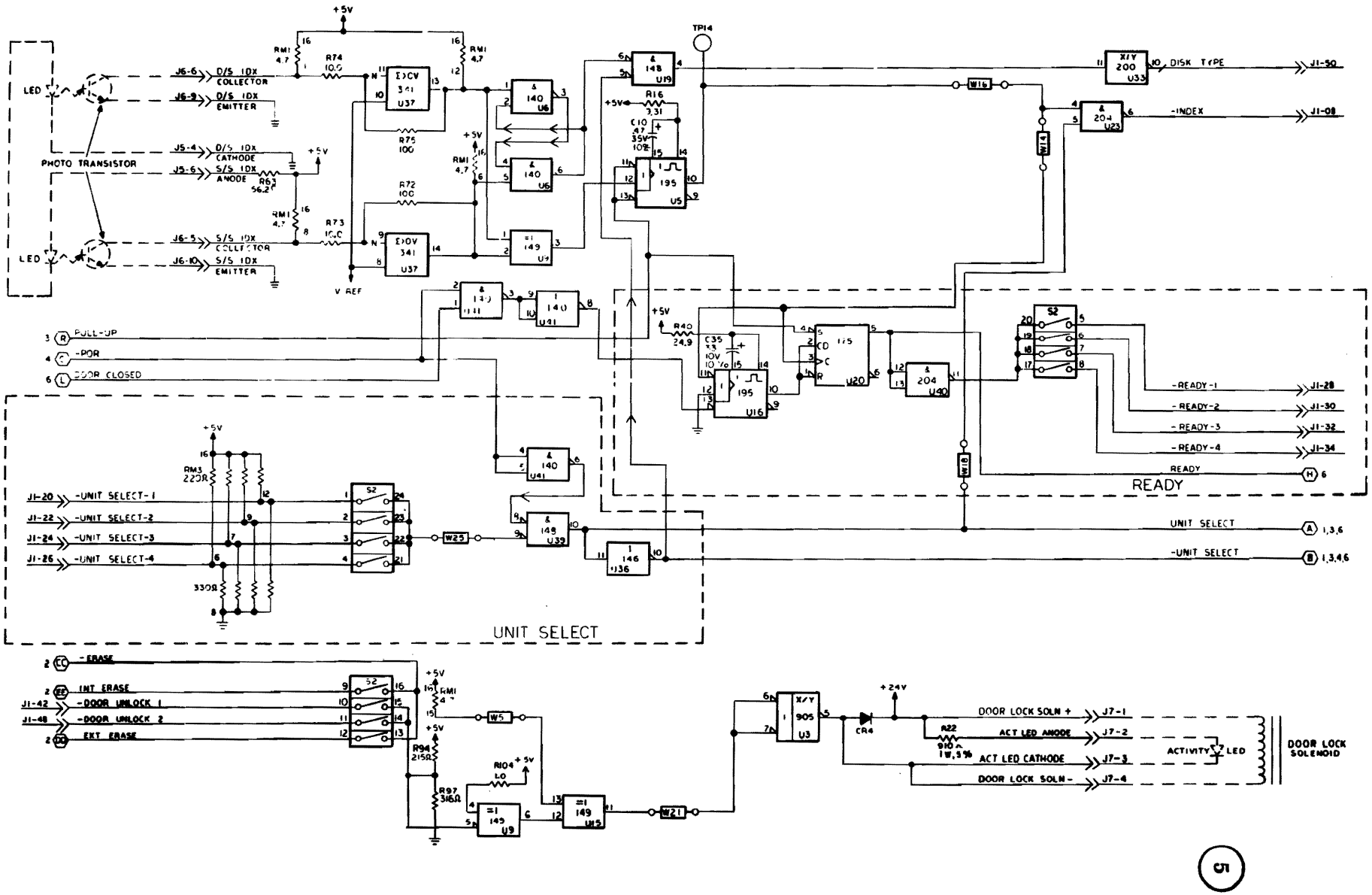

Figure 5-2. Schematics (Sheet 6 of 7)

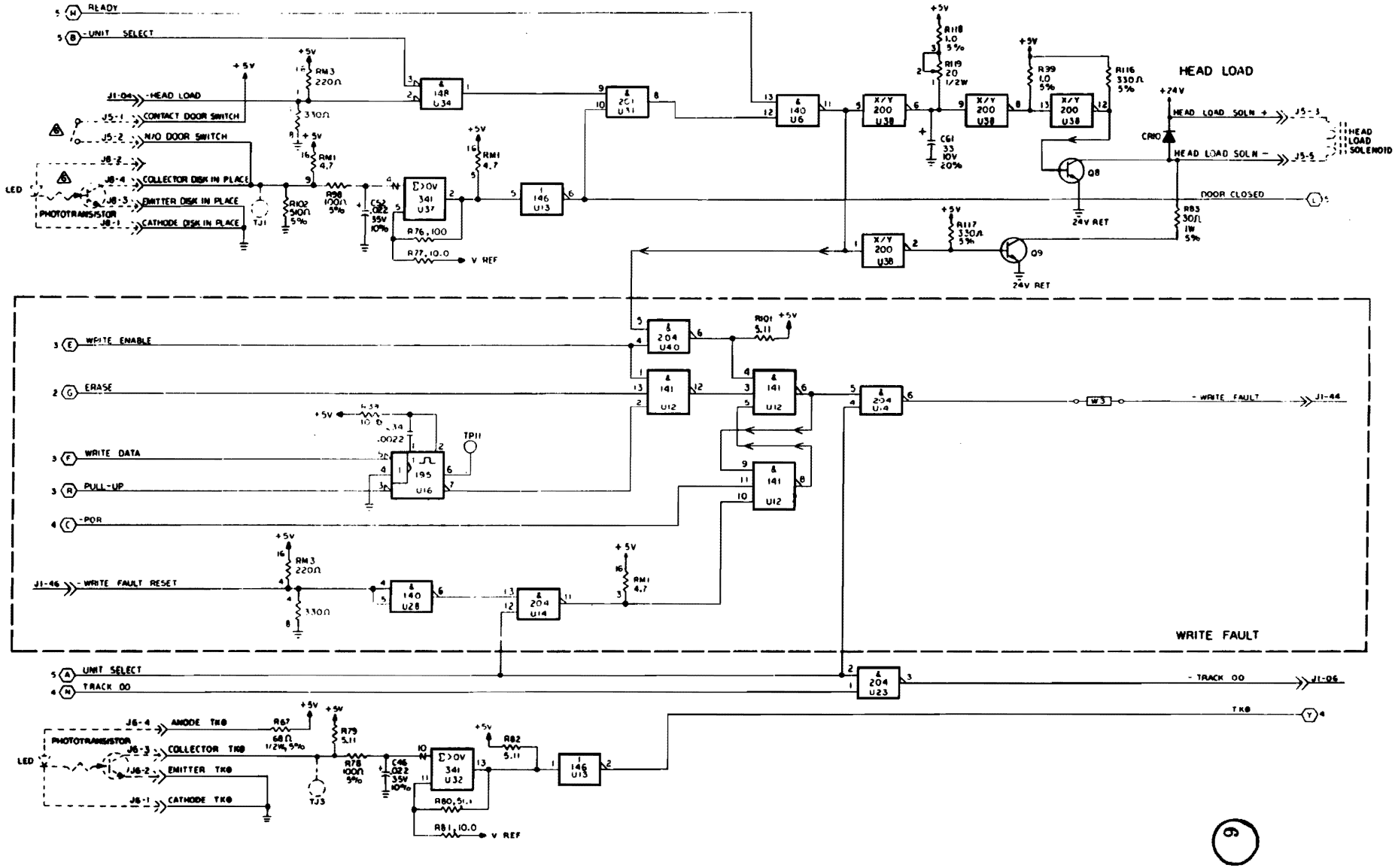

Figure 5-2. Schematics (Sheet 7 of 7)

P830-025

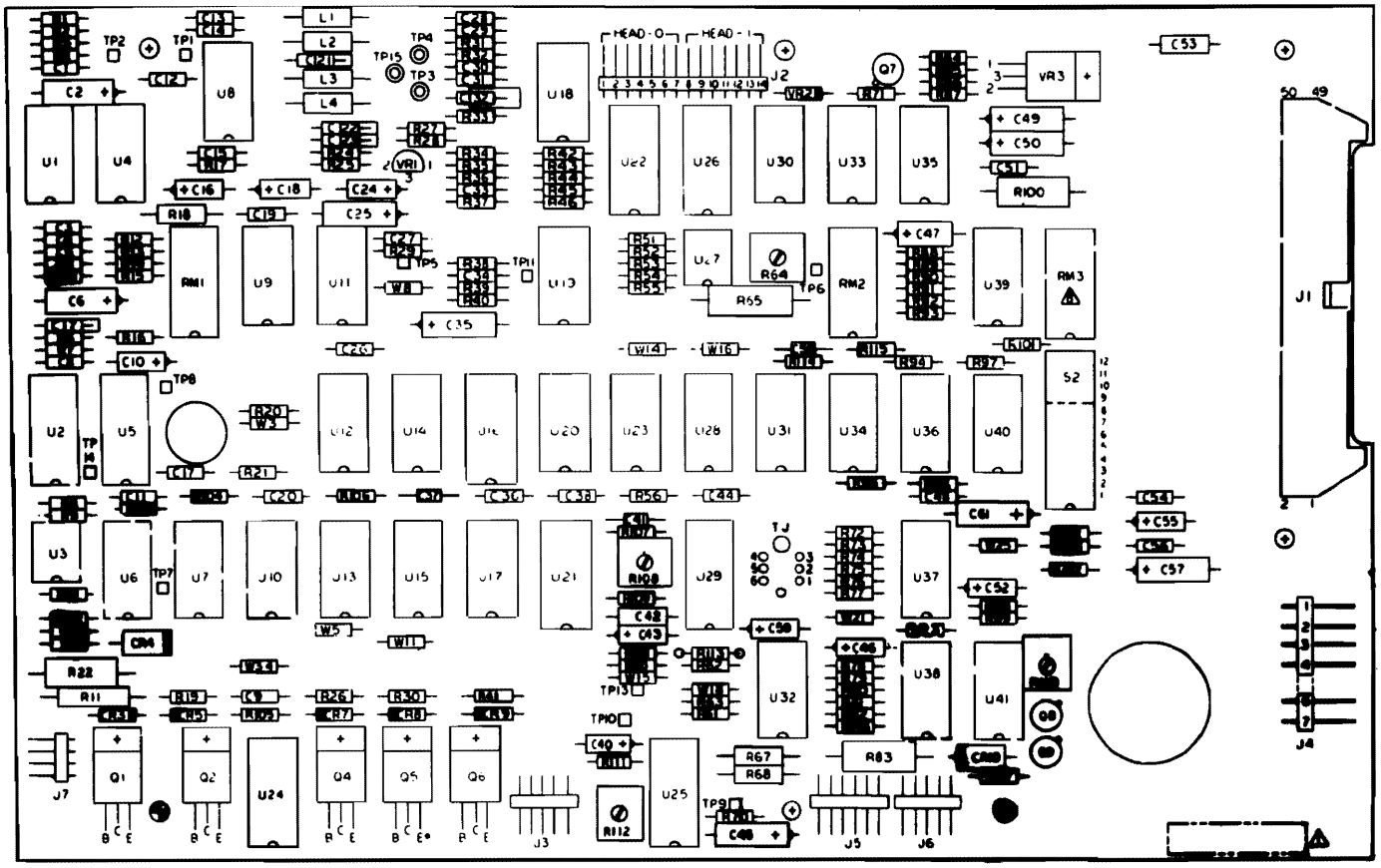

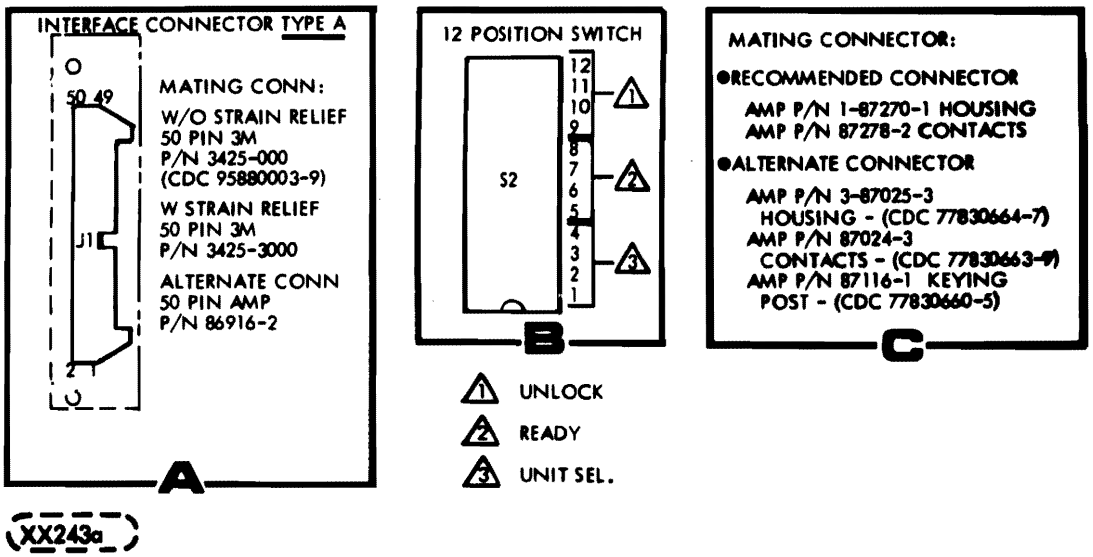

XX243a

Figure 5-3. Assembly and Parts List (Sheet 1 of 5)

RES	PL ITEM
R1	57
R2	57
R3	57
R4	57
R5	51
R6	35
R7	45
R8	55
R9	55
R 0	52
R11	67
R12	35
R13	50
R14	43
R15	43
R16	56
R17	39
R18	69
R19	54
R20	52
R21	53
R22	129
R23	42
R24	54
R25	54
R26	54
R27	41
R28	41
R29	46
R30	54
R31	43
R32	43
R33	78
R34	113
R35	113
R36	70
R37	40
R38	46
R39	35
R40	60
R41	54
R42	37
R43	36
R44	60
R45	60
R46	36
R47	—

RES	PL ITEM
—	—
—	—
—	—
R51	82
R52	47
R53	44
R54	61
R55	59
R56	52
—	—
—	—
—	—
R60	52
R61	52
R62	35
R63	116
R64	63
R65	114
—	—
R67	68
R68	68
R69	—
R70	62
R71	49
R72	115
R73	35
R74	35
R75	115
R76	115
R77	35
R78	42
R79	52
R80	50
R81	35
R82	52
R83	134
R84	59
R85	59
R86	35
R87	109
R88	110
R89	48
R90	43
R91	43
R92	35
R93	115
R94	137

RES	PL ITEM
R95	52
R96	55
R97	138
R98	42
R99	55
R100	73
R101	52
R102	49
R103	55
R104	55
R105	55
R106	71
R107	71
R108	89
R109	35
R110	58
R111	131
R112	89
R113	124
R114	71
R115	55
R116	122
R117	122
R118	55
R119	89
R120	—

IC	PL ITEM
U1	17
U2	10
U3	4
U4	17
U5	10
U6	8
U7	7
U8	16
U9	13
U10	121
U11	11
U12	5
U13	14
U14	6
U15	13
U16	10
U17	12
U18	16
U19	9
U20	11
U21	10
U22	117
U23	6
U24	24
U25	10
U26	117
U27	4
U28	8
U29	10
U30	18
U31	12
U32	15
U33	7
U34	9
U35	118
U36	14
U37	15
U38	7
U39	9
U40	6
U41	8

CAP	PL ITEM
C1	76
C2	94
C3	84
C4	84
C5	84
C6	91
C7	83
C8	86
C9	76
C10	97
C11	76
C12	75
C13	76
C14	76
C15	75
C16	92
C17	87
C18	92
C19	76
C20	76
C21	77
C22	79
C23	79
C24	85
C25	94
C26	76
C27	107
C28	76
C29	76
C30	75
C31	75
C32	80
C33	76
C34	88
C35	90
C36	76
C37	75
C38	76
C39	—
C40	123
C41	87
C42	81
C43	98
C44	76
C45	93
C46	99
C47	95

CAP	PL ITEM
C48	76
C49	96
C50	96
C51	76
C52	99
C53	81
C54	76
C55	92
C56	76
C57	102
C58	87
C59	111
C60	76
C61	133

CONN	PL ITEM
J1	—
J2	23
J3	128
J4	—
	—
J5	127
J6	128
J7	140
J8	—

JMPR	PL ITEM
—	—
W2	106
W3	—
W4	106
W5	136
W6	—
W7	—
W8	106
W9	106
W10	—
W11	106
W12	106
W13	—
W14	106
W15	106
W16	106
W17	—
W18	—
W19	—
W20	—
W21	136
W22	106
W23	—
W24	—
W25	106
W26	—
W27	106
W28	—
W29	—
W30	106
W31	—
W32	—
W33	136
W34	106
W35	—

IND	PL ITEM
L1	64
L2	64
L3	65
L4	65

VOLT REG	PL ITEM
VR1	74
VR2	108
VR3	19

RES MOD	PL ITEM
RM1	120
RM2	119
RM3	20,21

SWITCH	PL ITEM
S1	—
S2	135

TSTR	PL ITEM
Q1	27
Q2	26
—	—
Q4	26
Q5	26
Q6	26
Q7	28
Q8	28
Q9	28

DIODE	PL ITEM
CR1	29
CR2	31
CR3	31
CR4	139
CR5	31
—	—
CR7	31
CR8	31
CR9	31
CR10	30

Figure 5-3. Assembly and Parts List (Sheet 2 of 5)

Item No.	Part Number	Description	Remarks
1	77615300-9	PWA, 2-Sided FDD	
2	77615320-7	PWB, 2-Sided FDD	
4	15161600-0	IC 75461	
5	66299100-9	IC 7410	
6	15158300-2	IC 7438	
7	96744155-1	IC 7406	
8	66299099-3	IC 7400	
9	66299103-3	IC 7402	
10	15104301-5	IC 9602	
11	96744156-9	IC 7474	
12	88897000-1	IC 7408	
13	88885700-0	IC, 7486	
14	39389700-4	IC 7404	
15	95794600-7	IC LM339	
16	15163100-9	IC 733C	
17	15161800-6	IC LM319	
18	77832315-4	IC 3086	
19	15161100-1	Volt Reg 78M12	
20	95894500-8	Res PAC 220/330	
21	94260301-0	Socket 16 Pin	
22	94359504-1	Header-Flat Cable	
23	75743648-0	Header 14 Pos	
24	77612900-4	IC 5600 ROM 32x8	
25	92498021-2	Terminal, Swaged	
26	77836043-8	Transistor T1P120	
27	77836044-6	Transistor T1P125	
28	75722200-5	Transistor NPN	
29	51736700-9	Diode 1N914A	
30	56142000-1	Diode-Silicon	
31	94616400-1	Diode	
32	83452205-4	Switch-8 Position	
35	94360400-9	Res 1/4W 1% 10.0K	
36	94360472-8	Res 1/4W 1% 56.2K	
39	94360133-6	Res 1/4W 1% 22.1	
40	94360108-8	Res 1/4W 1% 12.1	
41	94360232-6	Res 1/4W 1% 215	
42	24500039-3	Res 1/4W 5% 100	
43	94360300-1	Res 1/4W 1% 1.00K	
44	94360364-7	Res 1/4W 1% 4.64K	
45	94360429-8	Res 1/4W 1% 20.0K	
46	94360384-5	Res 1/4W 1% 7.50K	
47	94360304-3	Res 1/4W 1% 1.10K	
48	94360431-4	Res 1/4W 1% 21.0K	
49	24500056-7	Res 1/4W 5% 510	
50	94360468-6	Res 1/4W 1% 51.1K	
51	94360448-8	Res 1/4W 1% 31.6K	
52	94360368-8	Res 1/4W 1% 5.11K	
53	94360390-2	Res 1/4W 1% 8.66K	
54	94360268-0	Res 1/4W 1% 511	
55	24500063-3	Res 1/4W 5% 1K	

Figure 5-3. Assembly and Parts List (Sheet 3 of 5)

Item No.	Part Number	Description	Remarks
56	94360393-6	Res 1/4W 1% 9.31K	
57	94360404-1	Res 1/4W 1% 11.0K	
59	94360365-4	Res 1/4W 1% 4.75K	
60	94360438-9	Res 1/4W 1% 24.9K	
61	94360200-3	Res 1/4W 1% 100	
62	94360415-7	Res 1/4W 1% 14.3K	
63	94372601-8	Res Vari 20% 200	
64	75887607-2	Inductor 5% 100UH	
65	75887599-1	Inductor 5% 22UH	
68	24500135-9	Res 1/2W 5% 68	
69	24500115-1	Res 1/2W 5% 10	
70	17705914-4	Res 1/4W 5% .12 MEG	
71	24500047-6	Res 1/4W 5% 220	
73	24507101-4	Res 1W 5% 10	
74	83452805-1	Volt Reg 78L12 AWC	
75	94240411-2	Cap 50V 10% 0.01UF	
76	94361400-8	Cap 50V +80-20% .10UF	
77	94227247-7	Cap 100V 2% 750	
78	94360216-9	Res 1/4W 1% 147	
79	94227238-6	Cap 100V 2% 330	
80	77830567-2	Cap 25V +80-20% 1.0UF	
81	75890977-4	Cap, 100V, .10UF	
82	94360385-2	Res 1/4W 1% 7.68K	
83	94227218-8	Cap 500V +/-1PF 47	
84	94240419-5	Cap 50V 10% 47	
85	24504346-8	Cap 10V 20% 4.7UF	
86	94240422-9	Cap 50V 10% 120	
87	94240401-3	Cap 50V 10% 1000	
88	94240402-1	Cap 50V 10% 2200	
89	94372606-7	Res Vari 20% 10K	
90	17706718-8	Cap 10V 10% 33UF	
91	24505260-0	Cap 6V 10% 8.2UF	
92	24504310-4	Cap 6V 20% 4.7UF	
93	24504370-8	Cap 15V 20% 15UF	
94	24505237-8	Cap 35V 10% 4.7UF	
95	24505205-5	Cap 35V 10% .01UF	
96	24504339-3	Cap 35V 20% 6.8UF	
97	24505225-3	Cap 35V 10% .47UF	
98	17706706-3	Cap 10V 10% 3.3UF	
99	24505209-7	Cap 35V 10% .022 UF	
100	77600000-2	Right Angle Header	
101	77600002-8	Right Angle Header	
102	24504337-7	Cap 35V 20% 4.7UF	
103	95510024-3	Nut Hex Mach (NC)	
104	10125801-0	Spring Lock Washer	
105	95683502-9	Stud, Press	
106	94358500-0	Jmpr Wire, Molded	
107	94240407-0	Cap 50V 10% 220	
108	15101103-8	Diode V.R. 3.3V 5%	

Figure 5-3. Assembly and Parts List (Sheet 4 of 5)

Item No.	Part No.	Description	Remarks
109	24500055-9	Res 1/4W 5% 470	
110	94360488-4	Res 1/4W 1% 82.5K	
111	24505223-8	Cap 35V 10% 0.33UF	
113	94360328-2	Res 1/4W 1% 1.96K	
114	24504842-6	Res 2W 5% 130	
115	94360500-6	Res 1/4W 1% 100K	
116	94360172-4	Res 1/4W 1% 56.2	
117	75884570-5	Diode Array 8 DIC16	
118	75887207-1	Transistor Q2T2905	
119	75738610-7	Resistor Module 1.0K	
120	75738663-6	Resistor Module	
121	17182900-5	IC 7493	
122	24500051-8	Res 1/4W 5% 330	
123	24505229-5	Cap 35V 10% 1.0UF	
124	94357500-1	Resistor Test Select	
127	77612189-9	Right Angle Header	
128	77612188-1	Right Angle Header	
130	77612165-9	Terminal Slotted	
131	94240448-4	Cap 50V 10% 0.10UF	
132	94372607-5	Res Vari 20% 20K	
133	24504353-4	Cap 10V 20% 33UF	
134	24507112-1	Res 1W 5% 30	
135	83452209-6	Switch, 12 Position	
136	94358500-0	Jmpr, Wire, Molded	
137	94360248-2	Res 1/4W 1% 316	
138	94360232-6	Res 1/4W 1% 215	
139	56142000-1	Diode-Silicon	
140	75743538-1	Header 4 Pos	

Figure 5-3. Assembly and Parts List (Sheet 5 of 5)

	Old Version	New Version
Figure 5-1a:		
	TP 3-4	TP 5-6
	TP 1-2	TP 2-1
	U9 PIN11	U8 PIN8
	U2 PIN9	U13 PIN7
	U11 PIN9	U12 PIN5
	U11 PIN8	U12 PIN6
	U9 PIN8	U8 PIN6
	U2 PIN6/TP8	U13 PIN10/TP10

	V_{TP7}	V_{TP3}
Figure 5-1c:		
	U10 PIN12	U17 PIN12/TP15
	TP10 U29-6	TP14, U2-6
	TP9	TP12
	U29 PIN9	U2 PIN9
	U25 PIN6	U5 PIN6
	U20 PIN8	U12 PIN8

	V_{TP7}	V_{TP3}
Figure 5-1d:		
	U10 PIN12	U17 PIN12/TP15
	TP10	TP14
	TP9	TP12
	U29 PIN9	U2 PIN9
	U25 PIN6	U5 PIN6
	U20 PIN8	U12 PIN8

Testpoints

Old Version	New Version
TP 1	2
2	1
3	5
4	6
5,	13
6	8
7	3
8	10
9	12
10	14
11	-
12	-
14	9
15	4
	15

Table 6-1