Data Systems

PHILIPS

Service Manual

Flexible Disc Drive
P830-015
PTS6867
PTS8861

A PUBLICATION OF
PHILIPS DATA SYSTEMS
APELDOORN, THE NETHERLANDS

PUB. NO. 5122 991 29601

DATE May 1979

Great care has been taken to ensure that the information contained in this handbook is accurate and complete. Should any errors or omissions be discovered, however, or should any user wish to make a suggestion for improving this handbook, he is invited to send the relevant details to:

PHILIPS DATA SYSTEMS
SERV. DOC. AND TRAINING DEPT.
P.O. Box 245, APELDOORN,
THE NETHERLANDS.

Copyright © by PHILIPS DATA SYSTEMS.
All rights strictly reserved. Reproduction or issue to third parties in any form whatever is not permitted without written authority from the publisher.

REVISION RECORD

REV	DATE	TABLE OF CONTENTS SHEETS AFFECTED	MANUAL/SECTION REVISION STATUS												CHANGE AUTHORITY
			1	2	3	4	5	6	7	8	9	10	11	12	
A	ISSUE		A	A	A	A	A	A	A	B	A				JAM
B	77 Jan JUN 2		A	A	A	B	B	B	A	B	A				PL 12895
C	77 JULY 26	ii	C	A	A	B	C	B	A	B	A				PL 12929
D	77 Jan OCT 14	ii, iv	D	A	A	D	D	B	A	B	A				PL 12953
E	77 Ja NOV 8	i i	D	A	A	D	E	E	A	B	A				PL 12981
F	77 Jan DEC 6	ii	D	A	A	D	E	E	A	C	A				PL 12997
G	78 Jan FEB 2	ii	D	A	A	D	E	G	A	C	A				PL 21011
H	78 Jan MAR 2	ii, vi, viii	D	A	A	D	E	H	A	D	A				PL21020
J	78 Jan MAR 28	iv	D	A	A	D	E	H	A	E	A				PL 21028
K	78 TC MAY 4	ii, iv	K	A	A	D	K	K	A	E	A				PL 21044
L	78 TC MAY 31	ii	K	A	A	D	K	K	A	F	A				PL 21062
M	78 PF AUG 1	ii, iv	K	A	A	D	M	K	A	F	A				PL 21068
N	78 PF OCT 9	ii	K	A	A	D	N	K	A	F	A				PL 21083
P	78 PF OCT 26	ii	K	A	A	D	N	K	A	G	A				PL 21102
R	78 PF NOV 22	ii, iv.	K	A	A	D	N	K	A	G	A				PL 21105
S	78 PF DEC 21	ii	K	A	A	D	S	K	A	G	A				PL 21114
T	79 Feb 14	ii	K	A	A	D	T	T	A	H	A				PL 21129
U	79 TC MAR 27	ii	L	A	A	E	U	U	A	H	A				PL 21141

Address comments concerning this manual to:

Technical Publications
Magnetic Peripherals Inc.
4000 Northwest 39th Expressway
Oklahoma City, Oklahoma 73112

or use the enclosed user comment sheet.

© 1977
Magnetic Peripherals Inc.

Printed in the United States of America
All Rights Reserved

PREFACE

This manual provides the information needed to install, operate and maintain the Control Data Corporation Flexible Disk Drive (FDD) and is intended to support customer engineers who require detailed information about the Flexible Disk Drive's operation.

The total content of the manual is comprised of two publications, each having a unique publication number, and is contained in one volume. The Manual's publication number (77834769) is that of the front matter, sections one through seven, and section nine. This number should be used when making reference to the Flexible Disk Drive Hardware Reference Maintenance Manual. Section VIII, Parts Data, is identified by the unique publication number 77834771.

This manual applies to several models of the FDD. A configurator sheet is provided on the following page which describes each FDD configuration that this manual will support. Refer to the equipment nameplate located on the right hand side of the unit (as viewed from the front) to determine the appropriate Top Mechanical Assembly (TMA) and Model numbers. Then use the Configurator sheet as a starting point to establish the maintenance level for the device.

FLEXIBLE DISK DRIVE CONFIGURATOR SHEET

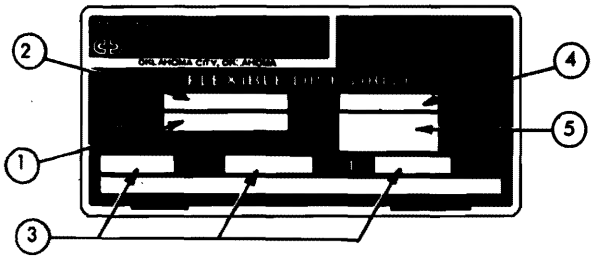

1. TOP MECHANICAL ASSEMBLY NO. (TMA)
2. MODEL NO. (BR8XXX)
3. AC POWER REQUIRED (ON UNITS LABELED 50/60 Hz CHECK CONFIGURATION OF PULLEY FOR FREQUENCY).
4. EQUIPMENT STATUS NUMBER
5. UNIT SERIAL NO.

POWER REQ																										
VDC	+5 & +24 AT J7																									
	+5 & +24 AT I/O J1																									
VAC	240, 1ø																									
	220, 1ø																									
	120 1ø																									
	100 1ø																									
WRITE SPLICE ADJ. (See Table 6-2)																										
CIRCUIT BD. CONFIG. (See Table 5-1)																										
DAISY-CHAIN INTERFACE																										
STANDARD INTERFACE																										
TMA NO.	MODEL NO											TMA NO.	MODEL NO													
75744001	BR803A	X		506	603		X			X		75744041	BR8A2N		X	505	603	X				X				
002	BR803B	X		506	603			X		X		042														
003	BR803C	X		506	603	X				X		043														
004	BR803D	X		506	603	X				X		044														
005	BR803E	X		502	603		X			X		045														
006	BR803F	X		502	603			X		X		046														
007	BR803G	X		502	603		X			X		047	BR8A5A		X	508	603		X				X			
008	BR803H	X		502	603			X		X		048	BR8A5B		X	508	603			X			X			
009												049	BR8A2W	X		501	603			X		X				
010												050	BR8A2Y	X		501	603			X		X				
011												051	BR8A6B	X		506	603			X		X				
012												052	BR803U	X		506	603		X			X				
013	BR803N	X		503	602		X			X		053	BR8A2S		X	510	603			X						
014	BR803P	X		503	602			X		X		054	BR8A2T		X	510	603			X						
015	BR803R	X		503	602	X				X		055	BR8A2U	X		512	603		X			X				
016	BR803S	X		503	602	X				X		056	BR8A2V	X		507	603			X						
017	BR803J	X		502	603				X	X		057	BR8A2Z		X	505	603									
018	BR803K	X		502	603				X	X		058	BR8A3G		X	504	601		X							
019	BR803L	X		513	603			X		X		059	BR8A3H		X	504	601			X						
020	BR803M	X		513	603		X			X		060	-		X	509	603			X						
021	BR8A3C	X		502	603			X		X		061	BR8A5C		X	508	603				X					
022	BR8A3D	X		502	603		X			X		062	BR8A5D		X	511	603			X						
023	BR8A3E	X		502	603			X		X		063														
024	BR8A3F	X		502	603		X			X		064														
025	BR8A2A		X	505	603		X				X	065														
026	BR803T	X		503	603				X	X		066														
027												067														
028	BR8A3A	X		501	603		X			X		068														
029												069														
030	BR8A2B		X	505	603			X			X	070														
031	BR8A2C		X	505	603	X					X	071														
032	BR8A2D		X	505	603				X		X	072														
033	BR8A2E		X	505	603	X					X	073														
034	BR8A2F	X		506	603			X		X		074														
035	BR8A2G			510	603		X					075														
036	BR8A2H	X		506	603			X		X		076														
037	BR8A2J		X	505	603		X				X	077														
038	BR8A2K		X	509	603			X			X	078														
039			X	505	603	X					X	079														

BB111a

TABLE OF CONTENTS

SECTION			PAGE
I	GENERAL DESCRIPTION		
1.1	INTRODUCTION		1-1
1.2	PURPOSE AND USE OF EQUIPMENT		1-1
1.3	PRODUCT DESCRIPTION		1-1
	1.3.1	Physical Description	1-2
	1.3.2	Electrical Description	1-2
	1.3.3	Performance Characteristics	1-2
II	OPERATION		
2.1	INTRODUCTION		2-1
2.2	OPERATING INSTRUCTIONS		2-1
	2.2.1	Flexible Diskette Loading	2-1
	2.2.2	Flexible Diskette Removal	2-1
2.3	ERROR RECOVERY		2-1
	2.3.1	Seek Error	2-1
	2.3.2	Write Error	2-1
	2.3.3	Read Error	2-2
2.4	DISKETTE HANDLING RECOMMENDATIONS		2-2
III	INSTALLATION AND CHECKOUT		
3.1	INTRODUCTION		3-1
3.2	UNPACKING		3-1
3.3	INSTALLATION		3-1
3.4	CABLING AND CONNECTIONS		3-1
	3.4.1	Input/Output Cable	3-1
	3.4.2	DC Power Connection	3-2
	3.4.3	AC Power Connection	3-2
3.5	ENVIRONMENT		3-2
3.6	INITIAL CHECKOUT		3-2
	3.6.1	Operating Frequency	3-3
IV	THEORY OF OPERATION		
4.1	INTRODUCTION		4-1
4.2	GENERAL DESCRIPTION		4-1
4.3	FUNCTIONAL DESCRIPTION		4-3
	4.3.1	Control Logic	4-3
	4.3.2	Write and Fault Logic	4-6
	4.3.3	Read Logic	4-6
	4.3.4	Disk Drive	4-7
	4.3.5	Read/Write Head	4-7

SECTION PAGE

4.4 CONTROL AND DATA LINE CHARACTERISTICS 4-7
4.4.1 Logic Levels 4-7
4.4.2 Transmitter Characteristics 4-7
4.4.3 Line Receiver Characteristics 4-7
4.4.4 Control and Data Line Functions 4-8

V DIAGRAMS

5.1 INTRODUCTION 5-1

VI MAINTENANCE

6.1 INTRODUCTION 6-1
6.2 MAINTENANCE TOOLS 6-1
6.3 PREVENTIVE MAINTENANCE 6-1
6.4 HEAD CLEANING 6-1
6.5 TROUBLESHOOTING 6-2
6.5.1 DC Voltage and Signal Check 6-2
6.5.2 Diskette Not Rotating 6-5
6.5.3 Ready Signal Missing 6-6
6.5.4 Drive Not Responding to Commands 6-7
6.5.5 Index Pulse Missing 6-8
6.5.6 Head Not Loading 6-9
6.5.7 Read/Write Head not Stepping 6-10
6.5.8 No Track "00" Indicator 6-12
6.5.9 Read Errors 6-13
6.5.10 Write Errors 6-15
6.5.11 Write Protect Inoperative 6-17
6.6 ADJUSTMENT PROCEDURES 6-18
6.6.1 Carriage-Stop Adjustment 6-18
6.6.2 Burst to Index Check and Adjustment 6-19.2
6.6.3 Actuator Alignment (Diskette) 6-21
6.6.4 Push Rod Travel Adjustment 6-22
6.6.5 Door Interlock Switch Adjustment 6-23
6.6.6 Disk Load Bail Adjustment 6-24
6.6.7 Spindle and Cone Adjustment 6-25
6.6.8 Write Protect Assembly Adjustment 6-26
6.6.9 Track "00" Switch Adjustment 6-26
6.7 REMOVAL AND REPLACEMENT PROCEDURES 6-27
6.7.1 Printed Circuit Board (PWA) 6-27
6.7.2 Actuator Assembly 6-27
6.7.3 Drive Motor Assembly 6-29
6.7.4 Head Load Pad Replacement 6-29
6.7.5 Solenoid Replacement and Tang Adjustment 6-29
6.7.6 Carriage and/or Stepper Motor Replacement 6-31

SECTION PAGE

6.8 FREQUENY CONVERSION 6-31
6.8.1 Operating Frequencies Conversion Procedure 6-31

VII MAINTENANCE AIDS

7.1 INTRODUCTION 7-1
7.2 PHYSICAL DESCRIPTION (Logic) 7-1
7.3 USE OF RELATIVE LEVEL INDICATORS 7-1
7.4 INTEGRATED CIRCUITS 7-1

VIII PARTS DATA

8.1 INTRODUCTION 8-1
8.2 ILLUSTRATIONS 8-1
8.3 PARTS LISTS 8-1
8.4 TOP MECHANICAL AND ASSEMBLY LOCATOR 8-1
8.4.1 Top Mechanical Assembly (TMA) 8-1
8.5 REPLACEMENT PARTS 8-1
8.6 PARTS LIST INSTRUCTIONS 8-10
8.6.1 Illustration Parts Lists 8-10
8.6.2 Top-Down Assembly/Component Parts List 8-10
8.6.3 Cross Reference List 8-10
8.6.4 Sheet Number Referencing 8-10

IX WIRE LISTS

9.1 INTRODUCTION 9-1
9.2 UPPER HARNESS ASSEMBLIES 9-1
9.3 LOWER HARNESS ASSEMBLY 9-1
9.4 STEPPER MOTOR 9-1
9.5 WRITE PROTECT 9-1

LIST OF ILLUSTRATIONS

FIGURE	TITLE	PAGE
2-1	Diskette Installation	2-2
3-1	AC Cable Assembly	3-3
4-1	Functional Block Diagram	4-5
5-1	Timing	5-2
5-2	Schematics	5-4
5-3	Assembly and Parts List	5-10
6-1	-Head Load and Door Interlock Switch	6-3
6-2	Differential Read Signal for Entire Track	6-4
6-3	Differential Read Signal for Portion of Outer Track	6-4
6-4	Write Data, Write F/F Output, and Head Write Voltage for Outer Track	6-4
6-5	Base and Chassis Support Assembly	6-19
6-6	Carriage-Stop Adjustment	6-19.1
6-6a	Plastic Carriage-Stop and Stop-Gauge Assemblies	6-19.1
6-6b	Metal Carriage-Stop Assembly	6-19.1
6-7	Write Splice Bit to Index Timing	6-20
6-8	Head Alignment Amplitude	6-22
6-9	Chassis Base Assembly	6-23
6-10	Disk Load Solenoid	6-24
6-11	Spindle and Cone	6-25
6-12	Base Casting Assembly	6-28
6-13	Head Load Pad Replacement Illustration	6-30
6-14	Solenoid Adjustment	6-31
6-15	Drive Pulley Reversal	6-32
7-1	Inversion Conventions	7-1
7-2	Integrated Circuit	7-2
7-3	Schematic Symbols	7-2

LIST OF TABLES

TABLE	TITLE	PAGE
4-1	Phase Sequence of Stepper Motor	4-3
4-2	Input/Output Lines	4-8
5-1	PWA Configurator	5-1
6-1	Flowchart Reference	6-2

GENERAL DESCRIPTION 1

1.1 INTRODUCTION

The Flexible Disk Drive (FDD) is a compact, portable, random access, data storage device that interfaces with a central processor via a control unit. Input/Output data and control signals are transmitted by means of an I/O cable.

1.2 PURPOSE AND USE OF EQUIPMENT

Data, in the form of magnetized bits, is written on, or read from the tracks of a rotating diskette. The FDD uses a single, flexible, removable diskette (one recording surface) enclosed in a sealed jacket. The unit is capable of hard-sector or soft-sector (missing clock) format operation, but the missing clock must be recovered externally (from the FDD).

1.3 PRODUCT DESCRIPTION

The major FDD components are the spindle, disk drive motor, read/write head, stepping motor, track indexing device, and printed circuit board.

The options include Write Protect, Data/Clock Separation, Power Reduction, Sector Separation, Unit Select, Ready, Door Unlock, Write Fault, and Hour Meter.

All FDD components are mounted on a base assembly. The front panel has a spring loaded door through which the diskette is installed. The door is mechanically linked to the disk loading mechanism and the head load interlock switch; therefore, when the door is closed the Read/Write head may be loaded on the diskette in preparation for the transfer of data.

Standard Models Versus Daisy-Chain Models - Throughout this manual certain features and operation of the Flexible Disk Drive are described in terms of the manner in which the FDD is designed to be connected to its controller, either standard or daisy chain.

Standard models are designed to be connected to their associated controller in star fashion wherein each FDD unit has its own complete umbilical cable connection to the controller, with no interconnection between FDD units. Standard FDD model units are always in a ready state for reading or writing operation after initial preparation and turn on.

Daisy-chain models are designed so that one to four FDD units may be connected serially to a common controller. The controller continously monitors the operational readiness of each FDD in its chain and commands and controls the reading and writing operation of any selected FDD unit in its chain.

1.3.1 PHYSICAL DESCRIPTION

The physical dimensions for the equipment are as follows:

Height	4.97 inches (126.2mm)
Width	8.78 inches (223.0mm)
Depth	14.24 inches (361.7mm)
Weight	12 lbs. (5.44 kgm)

1.3.2 ELECTRICAL DESCRIPTION

The electrical specifications for the equipment are as follows:

- DC Power Source (Supplied by Host Equipment)

  Without Stepper-Power Reduction
  +24 Volts (± 10%) @ 1.3 A Typical
  + 5 Volts (± 5%) @ 0.8 A Typical

  With Stepper-Power Reduction
  +24V (±10%) @ { 1.3A Typical, Stepping / 0.3A Typical, Not Stepping
  + 5V (± 5%) @ 1.0 A Typical, Not Stepping

- A. C. Power Source - Refer to the FDD configurator or FDD nameplate to determine A. C. Power requirements.

1.3.3 PERFORMANCE CHARACTERISTICS

The equipment specifications for the FDD are as follows:

- ACCESSING TIME

Maximum Access Time	770 ms
Maximum One-Track Access Time	20 ms
Average Access Time	263 ms

- RECORDING

Mode	Double Freq.	MFM
Density (nominal)	1836 BPI(72.3 BPmm) 3268 BPI(128.7 BPmm)	3672 BPI (144.6 BPmm) Outer Track 6536 BPI (257.3 BPmm) Inner Track
Data Transfer Rate	249, 984 bits/sec	499, 968 bits/sec
Bits/Byte	8	8
Bits/Track	41,664	83,328
Tracks	77	77
Sectors	Format Determined	Format Determined

- DATA CAPACITY

Bytes/Track	5,208	10,416
Bits/Track	41,664	83,328
Bits/Diskette	3,208,128	6,416,256

- **FLEXIBLE DISKETTE (Optional)**

	CDC 421-60W, Single Density,or Equiv. CDC 423-60W, Double Density, or Equiv.
Diskette Dimensions	8 x 8 inches (203.2 x 203.2mm) (including jacket
Useable Diskette Recording Surfaces	1
Diskette Surface Diameter	7.88 inches (200.1mm)
Recording Radii	Track 76 (inner) 2.0290 inches (515mm) nominal Track 00 (outer) 3.6123 inches (918mm) nominal
Diskette Surface Coating	Magnetic Oxide
Diskette Velocity	360 rpm

- **READ/WRITE HEAD**

Head Unit	1	
Track Width	0.013 in.	(0.33 mm)
Track Spacing	0.02083 in.	(0.529 mm)
Erase to Read/Write Gap	0.035 in.	(0.889 mm)

OPERATION 2

2.1 INTRODUCTION

The FDD is under direct control of the input/output and power sources. No special start-up procedure is required. Operation is fully automatic and requires no operator intervention during normal operation.

2.2 OPERATING INSTRUCTIONS

Verify that power and I/O cables are securely attached before operation.

2.2.1 FLEXIBLE DISKETTE LOADING

a. Apply AC/DC power to unit.
b. Open FDD door.
c. Remove diskette from storage envelope as shown in Figure 2-1.
d. On units with the Write-Protect option, be sure the Write-Protect slot in the jacket is open, as shown in Figure 2-1, if the diskette is to be write-protected.
e. If a diskette with a Write-Protect slot is not utilizing the Write Protect, that is, it will be written on, the slot must be covered with a piece of tape which is opaque to infrared.
f. Carefully slide diskette into FDD, as shown in Figure 2-1, until jacket is solidly against stops.
g. Carefully close unit door. Ensure that jacket is properly seated, spindle has engaged diskette, and door is closed and latched.
h. Protect the empty envelope from liquids, dust, and metallic materials.

2.2.2 FLEXIBLE DISKETTE REMOVAL

a. Open FDD door to stop diskette rotation and disenagage spindle.
b. Remove diskette from FDD and put it in its storage envelope.
c. Close FDD door.

2.3 ERROR RECOVERY

The following paragraphs give information needed to recover from possible errors in equipment operation.

2.3.1 SEEK ERROR

Seek errors will rarely occur unless the stepping rate is significantly exceeded. In the event of a seek error, recalibration of track location can be achieved by repetitive Step Out commands until a Track 00 signal is received.

2.3.2 WRITE ERROR

To guard against degradation from imperfections in the media, no more than four attempts to write a record should be used when Read After Write errors are encountered. In the event a record cannot be successfully written within four attempts, it is recommended that the sector or track be labeled defective and an alternate sector or track assigned. If more than two defective tracks are encountered, it is recommended that the diskette be replaced.

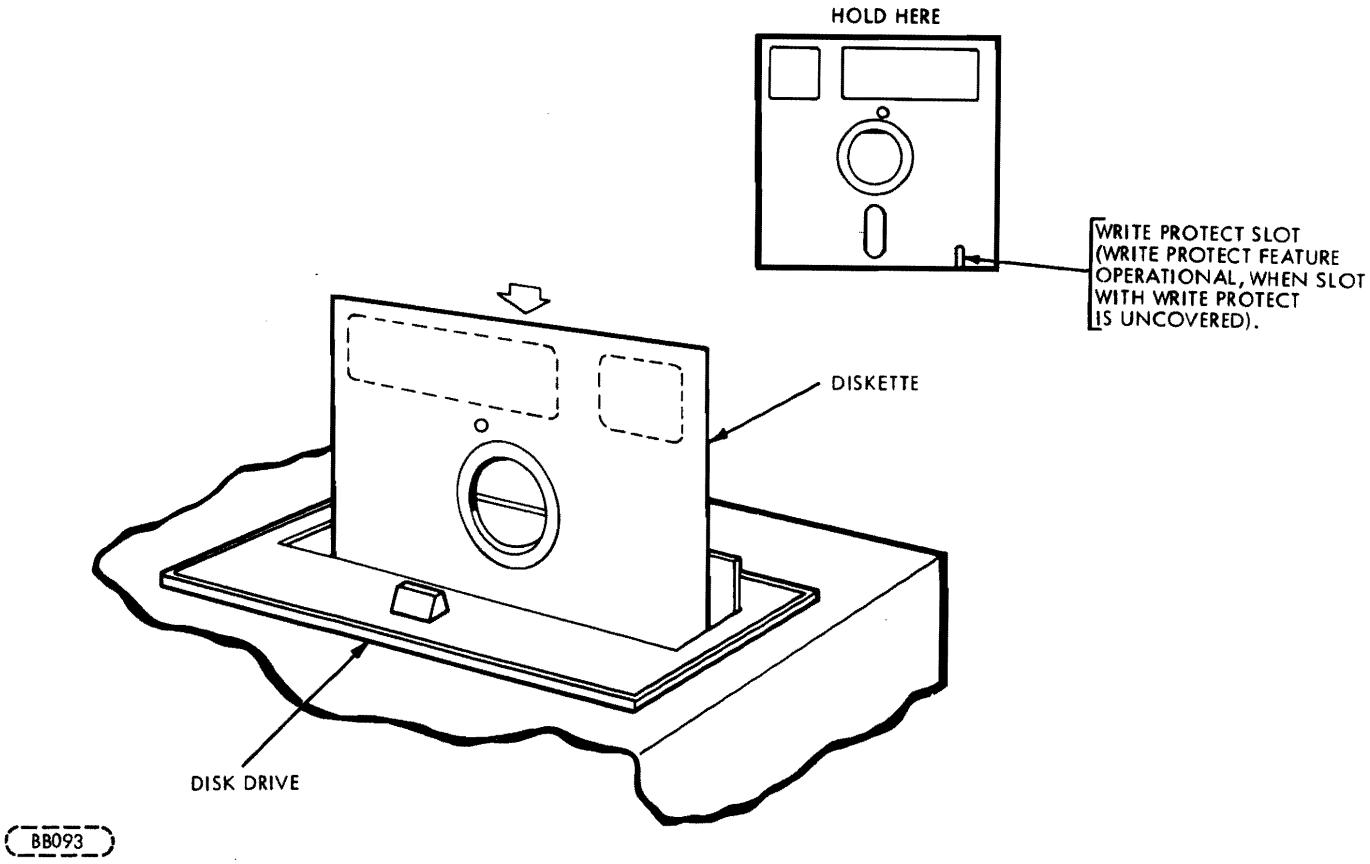

Figure 2-1. Diskette Installation

2.3.3 READ ERROR

In the event of a Read error, up to 10 attempts should be made to recover with re-reads. If after 10 attempts the data has not been recovered, step the head several tracks away and then re-position to recover the data. Unloading the head when data transfers are not imminent will increase the data reliability and extend the diskette life.

2.4 DISKETTE HANDLING RECOMMENDATIONS

Since the recorded diskette contains vital information, reasonable care should be exercised in its handling. Longer diskette life and trouble free operation will result if the following recommendations are followed.

a. Do not use a writing device which deposits flakes e.g., lead or grease pencils, when writing on diskette jacket label.
b. Do not fasten paper clips to diskette jacket edges.
c. Do not touch diskette surface exposed by jacket slot.
d. Do not clean diskette in any manner.
e. Keep diskette away from magnetic fields and from ferromagnetic materials that may be magnetized.

f. Return diskette to envelope when removed from FDD.
g. Protect diskette from liquids, dust, and metallic substances at all times.
h. Do not exceed the following storage environmental conditions:

Temperature:	50° to 125°F (10° to 56.1°C)
Relative Humidity:	8% to 80%
Maximum Wet Bulb:	85°F (29.4°C)

i. Diskettes should be stored in a box or cabinet when not in use.

INSTALLATION AND CHECKOUT 3

3.1 INTRODUCTION

This section provides the information and procedures necessary to put an FDD into operation.

3.2 UNPACKING

Unpack FDD as follows:

a. Cut banding and lift top half of styrofoam shell from unit.
b. Lift unit in polyethylene bag from bottom half of styrofoam shell and remove unit from polyethylene bag.

During unpacking, care must be used so that any tools being used do not inflict damage to the unit. As a unit is unpacked, inspect it for possible shipping damage. All claims for this type of damage should be filed promptly with the carrier involved. If a claim is filed for damages, save the original packing materials.

3.3 INSTALLATION

Install the FDD in the designated location in the host equipment.

3.4 CABLING AND CONNECTIONS

Connect the AC cable, I/O cable, and DC cable if applicable between the FDD and host equipment.

3.4.1 INPUT-OUTPUT CABLE

The maximum cable length from connector to connector is 25 feet. All inputs and outputs require pairs, one line for function, one for ground. The characteristic impedance is typically 120 ohms.

The information relative to the I/O connector (J1) and pin/signal assignments are defined in Table 5-1, Figure 5-2, and Figure 5-3.

On models designed for daisy-chain operation, the terminating resistor pack RM1 (See Figure 5-3) is to be installed in the end FDD (farthest from the controller) ONLY. Terminators in more than one FDD during daisy-chain hookup may result in damage to the controller.

For daisy-chain configurations, W32, W33, and W34 determine the FDD position in the daisy-chain. W32 is used with the door unlock option. Therefore, to change the position of the FDD in the daisy-chain, the jumpers must be unsoldered and moved to the desired location, see Figure 5-3B. Optionally switch S1 (S2 if door unlock option is included) is provided on the circuit board to enable changing the position of the FDD in the daisy-chain by switch selection.

3.4.2 DC POWER CONNECTION

DC power (user-supplied) for standard FDD models is transmitted from the controller via the I/O cable through the interface connector (J1) on the printed circuited board. Daisy-chain FDD models receive DC power (user-supplied) through a power cable which interfaces with its mating connector (J7) on the printed circuit board. The pin assignments and line functions are shown on sheets 1 and 6 of the schematics, Figure 5-2. The mating connector is described in Figure 5-3.

3.4.3 AC POWER CONNECTION

The AC Power Cable (CDC P/N 75292202 or equivalent - see Figure 3-1) is an optional item supplied on order. The cable consists of stranded wire, 18 AWG minimum with center pin connection utilized as frame ground. Refer to Figure 3-1 for connector part numbers and attachment.

3.5 ENVIRONMENT

Operating and storage environments of the FDD are as follows:

Operating: 50° to 100°F (10° to 38°C) 12°F (-11°C)/hr max. fluctuation
20% to 80% relative humidity
(providing there is no condensation)

Non-Operating:
-30° to +150°F (-35° to 65°C)
5% to 95% relative humidity
(providing there is no condensation)
Max. Wet Bulb 80°F (27°C)

3.6 INITIAL CHECKOUT

This procedure should be used to determine that FDD is operational. The procedure assumes that the unit is installed and the I/O and power cables are connected.

a. Apply ac power to unit and visually check that the spindle rotates.
b. Apply dc power to unit.
c. For Daisy-Chain FDD models using dipswitch S1 or S2 instead of jumpers W32, W33, and W34:
   1. Close one of the Unit Select switches (dip switch positions 1, 2, 3, or 4) located on the circuit board.
   2. Close one of the Ready switches (dip switch positions 5, 6, 7, or 8) located on the circuit board.
   3. If the Door Unlock option is installed, close one of the Door Unlock switches (dip switch positions 9, 10, 11, or 12) located on the circuit board.
d. Insert diskette as described in Section 2.
e. Apply a head-load-command signal to the unit and close the access door. Check that the head-load solenoid actuates, and the door microswitch is actuated.
f. Apply a stepping-command signal to the unit and check that the actuator steps the head as commanded.
g. Remove diskette.
h. Remove the command signals and power from the unit.

3.6.1 OPERATING FREQUENCY

If the required operating frequency is different than that which the unit is configured, the procedure for converting operating frequencies using the dual diameter reversible pulley is provided in Section 6, "Frequency Conversion" for applicable models.

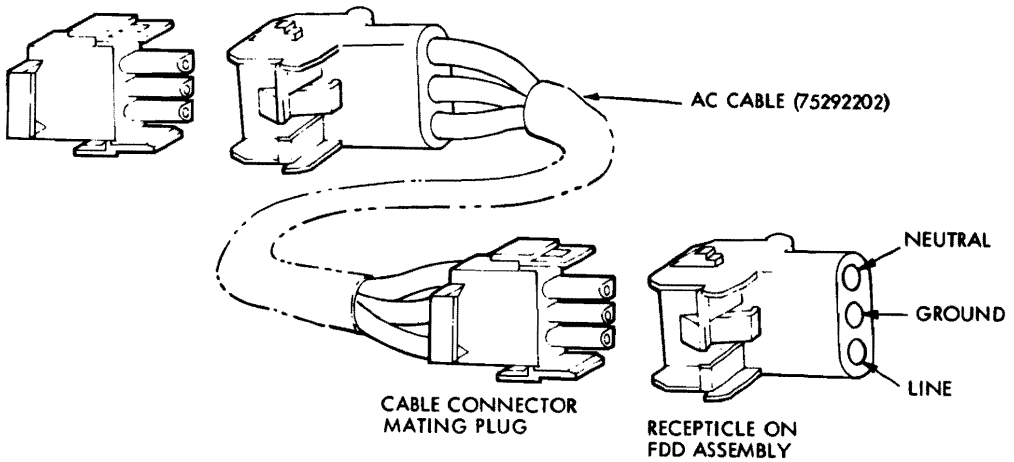

Figure 3-1. AC Cable Assembly

THEORY OF OPERATION 4

4.1 INTRODUCTION

The basic functions performed by the standard and daisy-chain models of the FDD are: (1) Receive and generate control signals, (2) Position the Read/Write head on selected tracks, and (3) Write or Read data upon command from the FDD controller. In the case of daisy-chain models, these functions are accomplished upon selection after initial indication to the controller that the FDD is ready to operate and accept commands. The standard models should be regarded as always selected.

The theory of operation for the FDD is divided into two parts. The first part gives a general theory of operation. The second part gives a detailed functional description of all major components both electronic and mechanical and describes all signals exchanged between the FDD and the controller.

4.2 GENERAL DESCRIPTION

The basic function of the FDD is to indicate to the controller when it is ready to operate, and respond to the commands of the controller to: (1) Receive and generate control signals, (2) Position the Read/Write head to selected tracks, and (3) Write or Read data on the diskette when selected. All of the functions described which are options may not apply to your particular FDD model. (Refer to the Preface at the front of the manual).

Signals received and transmitted by the FDD are shown in Figure 4-1, and explained in Table 4-2. All signals received by the FDD, except the door unlock signal, are gated with Unit Select so that no stepping, reading, or writing can be performed on an unselected FDD. Also, all signals generated within the FDD, except the Ready signal, are gated with Unit Select so that no signals can be transmitted from an unselected FDD.

During the write operation, the selected FDD receives Write Enable, Head Load, Write Data, and Low Current (Track 43 or greater) signals. If a Write Fault occurs, it will be transmitted to the controller. During Read operation, the selected FDD will receive a Head Load command. The Write Enable line remaining high implies a read operation. Under these conditions, the FDD will transmit Separated Data, Separated Clock, and Composite Read Data signals to the controller. Controller step in and step out commands are received initiating a track seek operation on a selected FDD. The FDD transmits Index and Sector pulses as long as it is selected. Also, the selected FDD transmits a Track 00 signal to the controller whenever the Read/Write head is at Track 00.

Positioning of the carriage-mounted Read/Write head is accomplished by a lead scew driven by a stepper motor. Each step command from the user system increments the stepper motor which, in turn, rotates the lead screw 15°. Each 15° rotation of the lead screw moves the Read/Write head one track position. The FDD has a power reduction option which reduces the stepper motor power 15 milliseconds after the last step command.

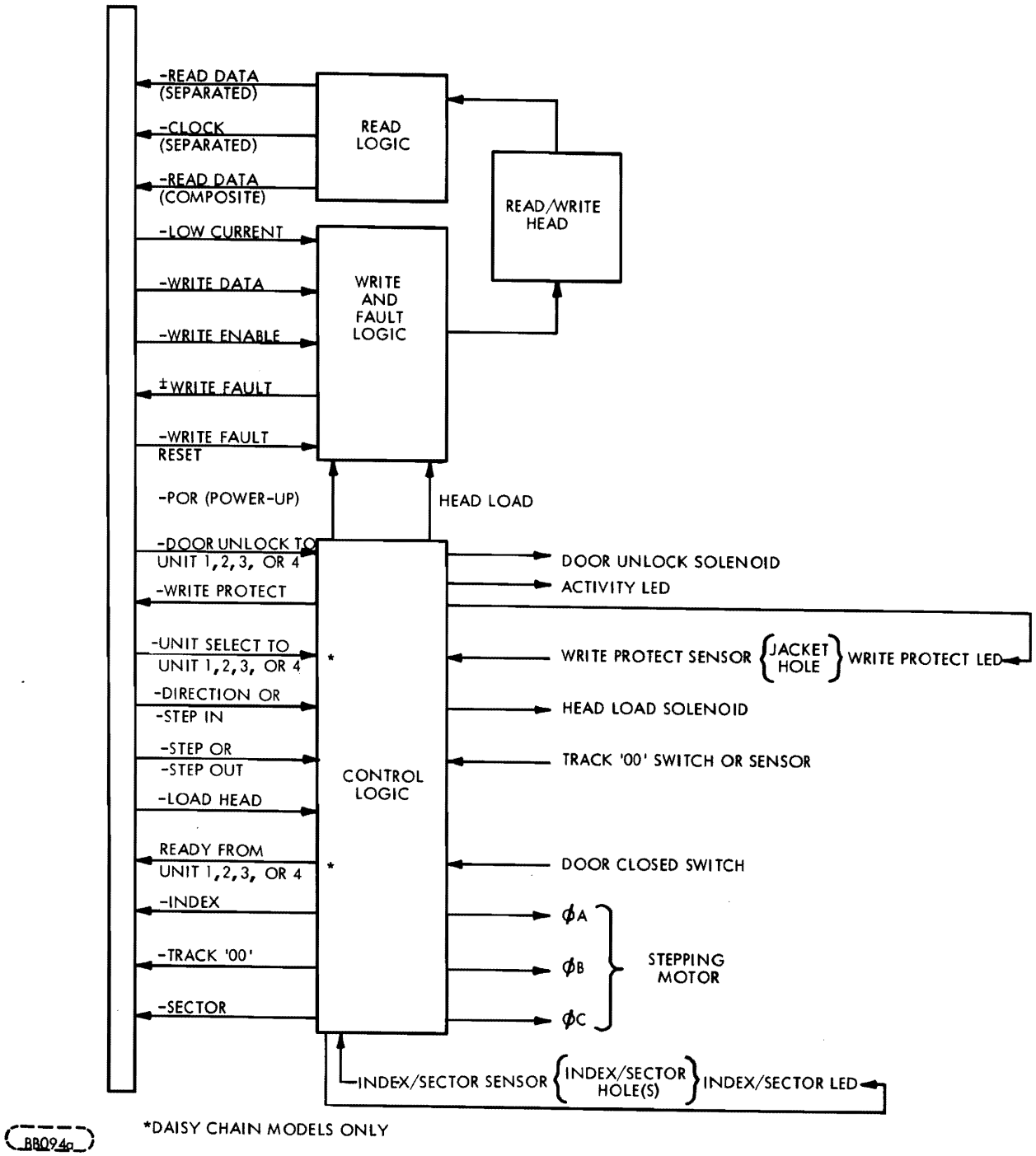

Figure 4-1. Functional Block Diagram

A reading or writing operation begins by placing the Read/Write head in contact with the disk with a Head Load command and at the desired track. To write on the disk, Write Enable is sent by the controller to condition the write logic. The write current then in the head, reverses polarity synchronous with the low-to-high transitions of the Write Data pulses from the controller. The current reversals cause magnetic flux reversals, the data and clock bits which are induced on the desired disk track. Erasure of previously recorded data is simultaneously accomplished during the writing operation in addition to a delayed-tunnel-erase which ensures disk interchangeability.

To read from the disk, magnetized bits in the format of the pre-recorded data are sensed by the read/write head. This signal is amplified, digitized, separated into clock and data information, and transmitted to the user system.

4.3 FUNCTIONAL DESCRIPTION

Refer to Figures 4-1, 5-1, and the Schematic Diagram, Figure 5-2, for the following discussion.

The FDD is divided into the following major functional areas:

a. Control Logic
b. Write and Fault Logic
c. Read Logic
d. Disk Drive
e. Read/Write Head

4.3.1 CONTROL LOGIC

The functions of the control logic are to generate the signals that (a) establish the ready status of the FDD, (b) step the Read/Write head in or out upon selection and command of the controller, (c) load the head on the disk for read/write operations, (d) protect the disk from writing if the write protect hole is present, (e) indicate when the Read/Write head is at Track 00, (f) generate the index and sector pulses when the diskette is rotating and the FDD is selected, (g) unlock the FDD door latch upon command of the controller through one of four switch or jumper-selected control lines, and (h) unit selection of the FDD.

a. The Ready signal is generated when the disk comes up to proper operating speed. The index pulses are used to re-trigger the multivibrator (U31 pin 5). The output of this element will remain high on a continuous basis when the repetition rate of the index pulses is shorter than the time out of U31 pin 7. This logic function is used to control the R/S flip flop (U19) to generate the Ready signal. W33 or switches (5, 6, 7 and 8) allow selection of the relative position of each FDD within the Daisy Chain Configuration.

b. At initial voltage application, the two flip flops of U25 are asynchronously reset through the action of comparater U30. At the instant the 5V appears, U30 pin 1 will go high, forcing pins 1 and 13 of U25 low, and forcing output pins 6 and 8 of U25 high. As capacitor C43 is charged, U30 pin 1 will switch low, assisted by hysteresis. This will cause the reset signal to go high and remain high as long as the +5 volts remains present.

Each step command received sequentially energizes one of the three phases of the stepper motor. Either the logic level of the Direction signal or the use of Step In or Step Out signals determine whether the phase sequence is Ø A, ØB, ØC, ØA. . . or ØA, ØC, ØB, and ØA.

Movement of the Read/Write head is initiated by the step commands from the controller. the head is stepped one track, either toward the spindle (In) or away from the spindle (Out), with each step command. The direction is regulated by the status of the Direction line (a low level of the Direction line causes the Read/Write head to step toward the spindle, and a high level causes the Read/Write head to step away from the spindle) or by commanding either the Step In or Step Out Line.

Drive to the specific stepper motor phases, A, B, and C, is provided by logic-driven darlington transistors Q3, 4, and 5. The logic drivers also decode the activated stepper phase information from the outputs of U25's flip flops. The leading edge of a step command triggers the three microsecond one-shot U16, whose trailing edge clocks the flip flops.

The phase sequence through which the stepper motor is driven (see Table 4-1) is controlled by the steering logic: gates U27 pin 8; U27 pin 11; U28 pin 3; and U28 pin 6. These gates receive direction information from U22 pin 4. The output of this gate is high during the rising edge of the flip-flop clock for the step in sequence. It is low during the step out sequence. Encoded information, indicating the active stepper motor phase at the time a step command has been issued, is fed to the steering logic from flip flop U25 output pins 5, 6, 8, and 9.

Table 4-1. Phase Sequence of Stepper Motor

Change the Active Phase Ø		To Step
From	To	
A	B	IN
B	C	
C	A	
A	C	OUT
B	A	
C	B	

The power reduction option, which reduces the stepper motor power 15 milliseconds after the last step command, is accomplished through the retriggerable one shot multivibrator U26 at pin 7. The time out of this one shot is approximately 15 milliseconds. Step commands which occur at a repetition rate of 10 milliseconds will hold U26 low. This has the effect of holding transistor Q2 on, and clamping the center tap of the stepper motor at + 24 volts. When the last step command is received, the one shot will time out and go high. This turns Q2 off, leaving the center tap of the stepper floating. The inductive reaction of the stepper motor winding in use at that

instant of time will force the voltage at the center tap toward a negative voltage; however, the +5 volt clamp through CR11 will prevent the voltage from dropping lower than approximately 4.3 volts. The stepper motor voltage will then remain at this level until the next step command is received, which will force Q2 to the on state again.

c. The Read/Write head of a selected FDD can be loaded when the disk is fully installed and the front panel door is closed. Closing the front panel door actuates the door interlock switch which completes the circuit to the head load solenoid. When the controller sends a Head Load signal, the head load solenoid is energized causing the armature bail to actuate. The actuation of the bail permits the head load arm and its pressure pad, under tension, to hold the disk surface against the Read/Write head.

d. The Write Protect function is accomplished through use of an LED (light-emitting diode) and a photo-transistor. These are mounted such that the presence of a write protect hole in the jacket of the diskette will cause pin 14 of comparator U30 to be driven high. This signal is gated with Unit Select and Write Enable to inhibit writing on any diskette possessing a write protect hole.

e. Track 00 signal is generated when the carriage assembly closes the Track 00 switch. Closing this switch sets the latch formed by the two gates of U29 pin 2 and U29 pin 4. The output of this latch (pin 2) is gated with ØA and Unit Select to provide the Track 00 signal that is transmitted to the controller from U15 pin 6. Capability exists for an optical light source (LED) and sensor (photo-transistor) to be used instead of a switch. The sensor output is fed into U30 pin 10, a comparator with hysteresis.

f. The beginning of each disk track is indicated by an Index pulse. The disk rotates between a light source (LED) and a sensor (photo transistor). When the index hole in the disk passes over the light source, light is detected by the sensor. The sensor output is amplified and transmitted to the controller as the Index pulse when the FDD is selected.

An index/sector separator can be provided on the FDD for use with hard sectored diskettes. Proper operation of the ready function requires that the index pulses be separated in the FDD. The composite index/sector signal is applied to input pin 11 of one-shot multivibrator U31. Feedback from output pin 10 to input pin 12 causes the one-shot to be non-retriggerable. ANDing the two outputs with the composite index/sector signal provides the separated index and sector signals.

g. The Door Unlock function enables the controller to activate a door unlocking solenoid and LED indicator by applying a low level to one of four jumper or switch selectable control lines. These lines are not gates with Unit Select. The four unlock positions of dipswitch S2 are 13, 14, 15, and 16, when jumper W32 is not used.

h. The unit select function inhibits all Command and status signals except Door Unlock and Ready. The position of the FDD in the daisy chain configuration is determined by the location of jumper W34 or the activation of switches 1, 2, 3, and 4.

4.3.2 WRITE AND FAULT LOGIC

A write operation begins with a Write Enable command from the controller when the FDD is selected. This command simultaneously enables the write data switching drivers (flip flop U9 pins 5 and 6), the write data gate (U5 pin 5), blocks the input to the read circuit by reverse biasing diodes CR1 through CR4, and after a delay energizes the erase windings. Data applied to the Write Data input alternately switches a constant write current through the write drivers to the head windings. Low Current operation, used when writing on track 43 or greater, is selected by switching a shunt resistor (R38) into the write current source. The current source, U11 pin 5, is a current mirror circuit which causes the current into pin 5 to mirror the current into U11 pin 1.

A Write Fault signal is generated if Write Enable is commanded and the head is not loaded (head load solenoid not energized), or Write Enable is commanded and no data is applied, or Write Enable is commanded but Write Data is applied at the wrong rate. Either one or both of the conditions sets the Write Fault latch (U6). Commanding a Write Fault Reset clears the Write Fault signal by resetting the Write Fault latch.

4.3.3 READ LOGIC

Read operation is enabled when the Read/Write head is loaded on the diskette and Write Enable is not commanded. With Write Enable not commanded, the data blocking diodes (CR1 through CR4) are forward biased and data sensed by the Read/Write head is fed to the read data circuit. The read signal from the diskette is in the form of a sine wave.

This analog signal is amplified by U3, filtered, differentiated by C12/R11 and C13/R12, amplified by U2, and coupled to a comparator/logic circuit to detect zero crossings and reject noise in the differentiated read signal.

The out-of-phase comparators U1 pins 7 and 12 have rise and fall times whose differences are exaggerated by slow-down capacitor C2. This results in a narrow negative pulse at U8 pin 11 which triggers a one microsecond retriggerable one-shot, U26 pin 9.

Flip flop U9 pins 8 and 9 perform a noise rejection function in that noise near the zero crossings of the amplified differentiated data only result in retriggering U26 pin 9. This appears as jitter in the clock for the flip flop whose data input, derived from redundant comparator U10 pin 12, has by that time stabilized.

Another slow-down capacitor, C5, causes a negative 60ns pulse to appear at the output of U8 pin 8 whenever the flip flop toggles. Although shifted in time by approximately the delay of one-shot U26 pin 9, each pulse corresponds to a zero crossing of the differentiated signal, and a peak of the analog read signal. Jitter at the flip flop clock input and U8 pin 8, which is due to noise at the zero crossings, will not affect the 250ns composite data pulse width.

Optional clock and data separation is provided by the 3/4 cell one shot U17 pin 9. It times out 2.9 microseconds from the leading edge of the 250 nanosecond composite data pulse. During the timeout of the one shot, the DC reset is removed from flip flop U19 pin 13. This enables the flip flop to clock a high from the data input pin 12 to output pin 9 on the trailing edge of the composite data pulse. (Note: The separator must be preconditioned with two cells of "zero" data bits for proper operation). When the flip flop changes state, steering logic gate U18 pin 8 holds the clocking inputs to the one shot and flip flop high. The separated clock signal is held high during this interval through the action of gates U20 pin 11 and U14 pin 6 identical to U18 pin 8. The flip flop enables the "one" data bit to appear at U18 pin 6, U20 pin 8, and U14 pin 3 during this 3/4

cell time. If no "one" data bit is present in the composite data, the -Read Data Separated signal will remain high. At the end of the 3/4 cell timeout, the flip flop is reset to repeat the operation.

4.3.4 DISK DRIVE

Disk drive is accomplished by clamping the diskette between the cone assembly and a belt driven spindle. The spindle is rotated at 360 rpm by the disk drive motor. A dual pulley option permits 50 or 60 Hz operation without a motor change.

4.3.5 READ/WRITE HEAD

The Read/Write head is in direct contact with the diskette during read or write operation. Since the head is rigidly mounted on the carriage assembly, head load is achieved by a solenoid actuated bail allowing the head load arm to force the diskette against the Read/Write head. The head surface is designed for maximum signal transfer to and from the magnetic surface of the diskette with minimum head/disk wear. The tunnel erase gap DC-erases the intertrack area to improve off-track signal-to-noise ratio and permit diskette interchange between units.

4.4 CONTROL AND DATA LINE CHARACTERISTICS

All signal lines must be terminated at the receiver with a characteristic impedance of 120 ohms, typically. Transmission is by 26 AWG (min.), 120 ohm flat cable or twisted pair (one twist per inch) with a maximum line length of 25 feet. Figure 5-1 shows the timing of typical operations.

4.4.1 LOGIC LEVELS

The following definitions will be used throughout this manual:

low = Logic 1, Active State	Refers to the low-voltage condition + 0.4VDC Max.
high = Logic 0, Inactive State	Refers to the high-voltage condition † 2.4 VDC Min.

4.4.2 TRANSMITTER CHARACTERISTICS

The FDD uses the TTL7438 (quad 2-input buffer or driver) to transmit all control and data signals. This transmitter is capable of sinking a current of 48ma with an output voltage of 0.4 volt.

4.4.3 LINE RECEIVER CHARACTERISTICS

The FDD uses the SN7400 family gates for line receivers. The input of each receiver is terminated in 120 ohms.

4.4.4 CONTROL AND DATA LINE FUNCTIONS

The signals that are exchanged are described in Table 4-2 and are shown relative to a point of origin in Figure 4-1.

Table 4-2. Input/Output Lines

SIGNAL	FUNCTION
INPUT LINES	
-STEP **	A 10 microsecond (minimum) logic 1 level pulse on this line causes the head to move one track as determined by the direction line.
-DIRECTION **	A logic 1 level on this line and step pulse causes the head to move one track inward toward the center of the diskette. A logic 0 level on this line and step pulse causes the head to move one track outward from the center of the diskette.
-STEP IN **	A 10 microsecond (minimum) logic 1 level pulse on this line causes the head to move one track inward toward the center of the diskette.
-STEP OUT **	A 10 microsecond (minimum) logic 1 level pulse on this line causes the head to move one track outward from the center of the diskette.
-HEAD LOAD	A logic 1 level on this line loads the diskette against the head through the use of a pressure pad on the opposing side of the diskette. The logic 1 level must be initiated 60 milliseconds prior to initiating a read or write operation to allow for head load settling time. For increased head and media life, this signal should be at a logic 0 whenever a data transfer operation is not in process or pending.

**Only one pair of signals per FDD.

Table 4-2. (continued)

SIGNAL	FUNCTION
INPUT LINES	
-WRITE ENABLE	To enable the FDD write driver, this line is held at a logic 1. To disable the FDD write driver and enable the FDD read circuitry, this line is held at logic 0. 500 microseconds minimum is required after a write operation before read data is stable.
-WRITE FAULT RESET	A logic 1 level on this line clears the write fault latch.
-WRITE DATA	This line contains the composite double frequency coded write clock and data information to the FDD. The write clock and data pulses must be 250 nanoseconds ±20% in length and are true at the logic 1 level. Information to be recorded on the diskette is derived from the transition of each pulse from logic 1 to logic 0 if W2 is present, or from logic 0 to logic 1 if W3 is present on the PWA.
-LOW CURRENT	This line reduces write current for tracks 43 or greater. A low level reduces write current.
-UNIT SELECT	On this line a logic 1 level with W21 and W22 present or a logic 0 level with W20 and W23 present enables the FDD interface except for -Door Unlock and -Ready.
-DOOR UNLOCK	A logic 1 level onthis line illuminates an LED indicator on the front panel of the FDD and activates a solenoid which unlocks the door latch mechanism, permitting manual opening of the door.
OUTPUT LINES	
-READY	A logic 1 level indicates that the door is closed, a diskette is rotating, and that no write fault condition exists.
-INDEX	This line gives an indication of the rotational position of the diskette by outputting a logic 1 pulse for every index hole of the diskette. The 1.5 millisecond pulse is generated by sensing the index hole in the diskette using a photo-optical technique.

Table 4-2. (continued)

SIGNAL	FUNCTION
OUTPUT LINES	
-SECTOR	This line gives an indication of the rotational position of the diskette by outputting a logic 1 pulse for every sector hole of the diskette. The 1.5 millisecond pulse is generated by sensing the sector holes with the same photo-optical assembly used for index.
+ WRITE FAULT	A logic 0 level indicates one or more of the following fault conditions. -Write enable without head load. -Write enable without write data. Incorrect write data rate.
-WRITE FAULT	A logic 1 level indicates one or more of the following fault conditions. -Write enable without head load. -Write enable without write data. Incorrect write data rate. A write fault can be cleared by a logic 1 on the write fault reset line.
-TRACK 00	A logic 1 level indicates that the head is positioned over Track 00.
-WRITE PROTECT	Logic 1 level indicates that hole on diskette is uncovered.
-READ DATA (Separated)*	This line contains the separated data information. A logic 1 level pulse of 250 nsec corresponds to a data 1 bit read from the diskette.
-CLOCK (Separated)*	This line contains the separated clock information. A logic 1 level pulse of 250 nsec corresponds to a clock bit read from the diskette.
-READ DATA (Composite)	This line contains the unseparated data and clock information. A logic 1 level pulse of 250 nsec corresponds to a data or clock bit read from the diskette.

*The signals are valid only when double frequency recording without missing clock is used.

5.1 INTRODUCTION

This section contains the printed circuit board documentation and related timing diagrams. This documentation applies to the printed circuit boards listed in Table 5-1. Refer to the Configurator sheet, located in the front of the manual, to determine the assembly number of the circuit board being serviced.

Figure 5-1 shows timing diagrams which illustrate signal/time relationships during read, write,step-in and step-out operations. Figure 5-2 is the printed circuit board schematics and Figure 5-3 contains the assembly drawing and parts list.

Table 5-1. PWA Configurator

(See Figure 5-3)

CONFIG. REF. NO.	CIRCUIT BOARD IDENT. NO.	OPTION CHART: INTERFACE CONNECTOR TYPE	ACTIVITY INDICATOR	WRITE FAULT	DOOR UNLOCK	READY	UNIT SELECT	SECTOR SEPARATION	POWER REDUCTION	DATA CLOCK SEPARATION	WRITE PROTECT	HOUR METER
501	75890300	A									X	
502	75890350	C									X	
503	75890400	D		X	X	X		X	X		X	
504	75890450	A		X		X		X	X		X	
505	75890500	A		X	X	X		X	X		X	
506	75890550	B			X						X	
507	75890600	A		X				X	X		X	
508	75890650	A		X		X		X	X	X	X	X
509	75890700	A			X	X		X	X		X	
510	75890750	A		X	X	X		X	X		X	
511	75896300	A		X		X		X	X	X	X	X
512	75892150	C				X					X	
513	77614500	B			X						X	

X161a

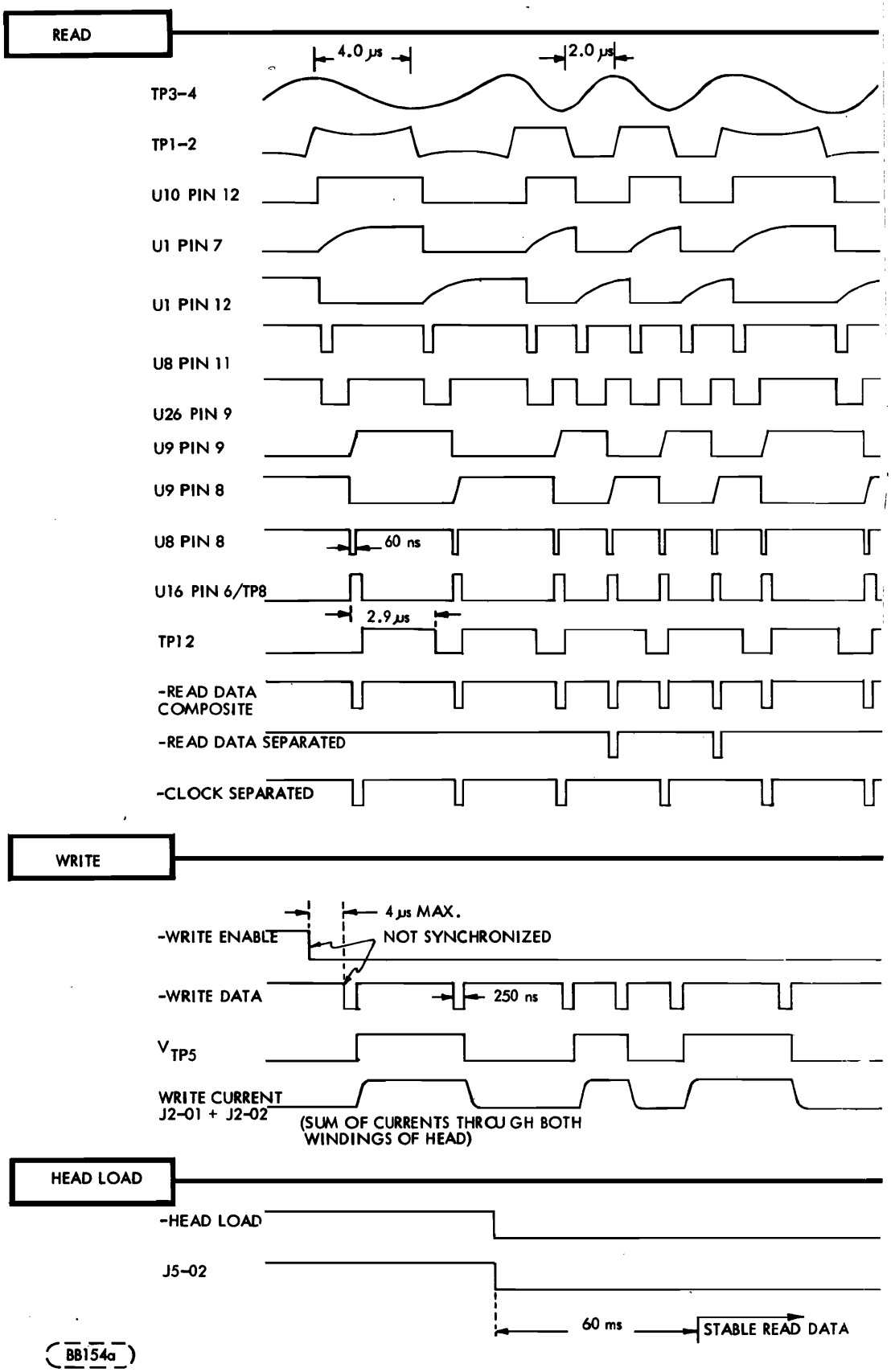

Figure 5-1. Timing

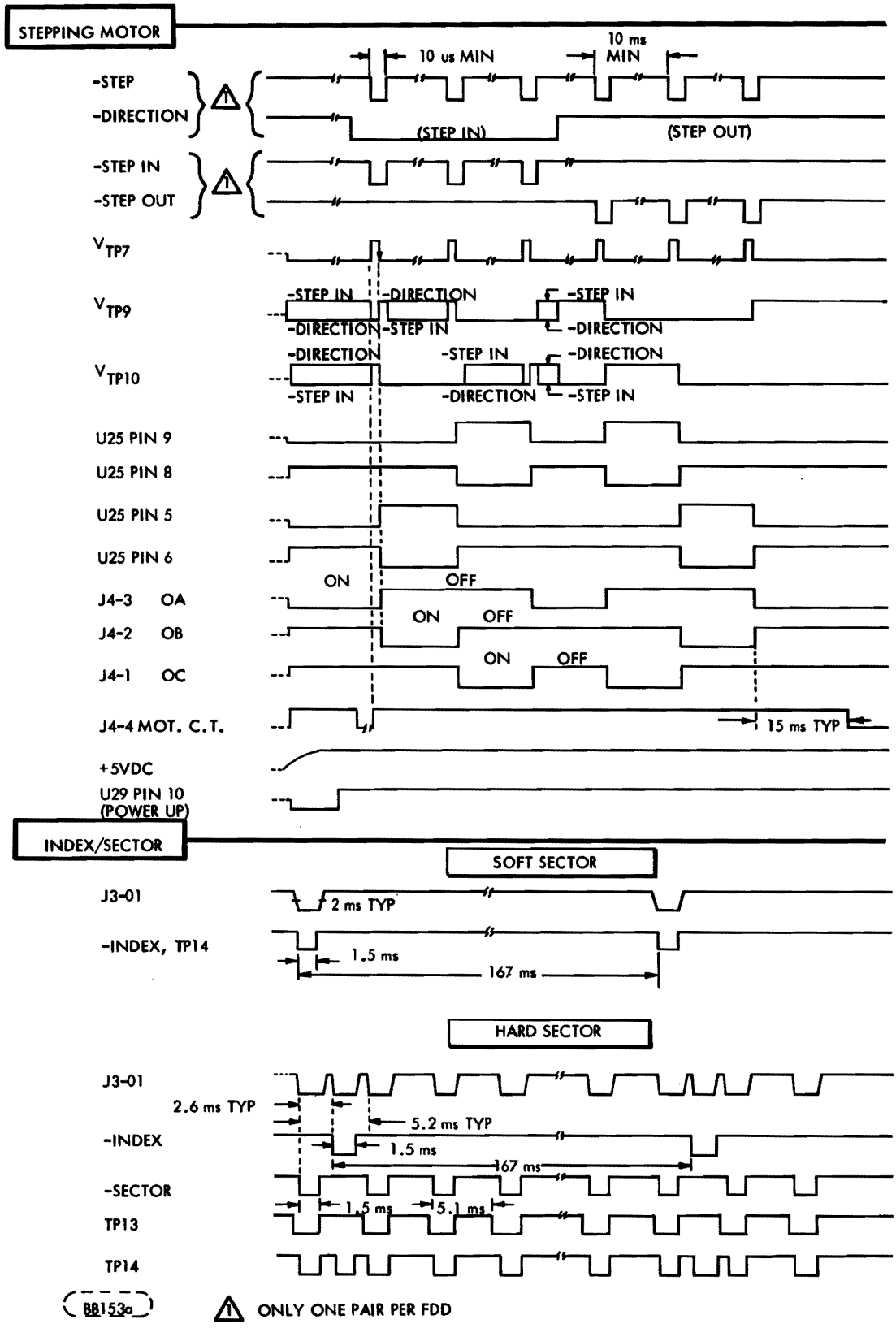

Figure 5-1. Timing (continued)

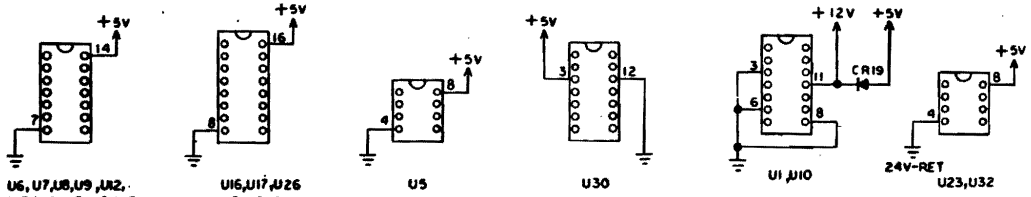

Figure 5-2. Schematics (Sheet 1 of 6)

ASSEMBLY NO.	TABLE B JUMPER CONFIGURATION (W1 – W37)
75890300-9	
75890350-4	
75890400-7	
75890450-2	
75890500-4	
75890550-9	
75890600-2	
75890650-7	
75890700-0	
75890750-5	
75892150-6	
77614500-5	
75896300-3	
77622600-3	
77624750-4	

TABLE A															
ASSEMBLY NO.	R21	R34	R37	R57	R86	U7	U14	U15	RMI-A	RMI-B	C12	C13	C73	C32
75890300 – 9	8.25	511Ω	1.10	8.66	6.81	204	204	204	220Ω	330Ω	330pf	330pf	—	.001
75890350 – 4	8.25	511Ω	1.10	8.66	31.6	204	204	204	220Ω	330Ω	330pf	330pf	—	.001
75890400 – 7	6.81	383Ω	619Ω	8.66	31.6	210	210	210	220Ω	330Ω	1000pf	1000pf	1000pf	.001
75890450 – 2	8.25	511Ω	1.10	8.66	31.6	204	204	204	220Ω	330Ω	330pf	330pf	—	.001
75890500 – 4	8.25	511Ω	1.10	8.66	31.6	204	204	204	220Ω	330Ω	330pf	330pf	—	.001
75890550 – 9	8.25	511Ω	1.10	8.66	31.6	204	204	204	220Ω	330Ω	330pf	330pf	—	.001
75890600 – 2	8.25	511Ω	1.10	8.66	31.6	204	204	204	220Ω	330Ω	330pf	330pf	—	.001
75890650 – 7	8.25	511Ω	1.10	8.66	31.6	204	204	204	220Ω	330Ω	330pf	330pf	—	.001
75890700 – 0	8.25	511Ω	1.10	8.66	31.6	204	204	204	220Ω	330Ω	330pf	330pf	—	.001
75890750 – 5	8.25	511Ω	1.10	8.66	31.6	204	204	204	220Ω	330Ω	330pf	330pf	—	.001
75892150 – 6	8.25	511Ω	1.10	8.66	31.6	204	204	204	220Ω	330Ω	330pf	330pf	—	.001
77614500 – 5	8.25	511Ω	1.10	8.66	31.6	210	210	210	330Ω	NONE	330pf	330pf	—	.001
75896300 – 3	8.25	511Ω	1.10	20.0	31.6	204	204	204	220Ω	330Ω	330pf	330pf	—	.68
77622600 – 3	8.25	511Ω	1.10	8.66	31.6	204	204	204	220Ω	330Ω	330pf	330pf	—	.001
77624750 – 3	8.25	511Ω	1.10	8.66	31.6	204	204	204	220Ω	330Ω	330pf	330pf	—	.001

J1 PIN CONFIGURATION AND ASSEMBLY USAGE							
FUNCTION NAME	75890450 75890500 75890600 75890700 75890750 77623400	77614500 75890550	75890400	75892150 75890350	75896300 75890650	75890300	
-WRITE FAULT RESET	46	52	6	48	46	49	
-WRITE DATA	18	50	9	42	18	47	
-WRITE ENABLE	16	48	10	40	16	45	
-LOW CURRENT	10	36	7	44	10	35	
+WRITE FAULT	—	—	—	50	—	—	
-HEAD LOAD	4	26	8	26	4	25	
-DIRECTION	14	—	—	—	14	—	
-STEP	12	—	—	—	12	—	
-INDEX	8	32	5	28	8	31	
-READ DATA COMPOSITE	2	20	14	34	2	19	
-TRACK 00	6	28	13	30	6	27	
-WRITE FAULT	44	40	4	—	44	39	
-READ DATA SEPARATED	38	18	1	—	38	17	
-CLOCK SEPARATED	42	22	2	—	—	21	
-WRITE PROTECT	36	—	3	—	36	—	
-UNIT SELECT 1	20	—	—	—	20	—	
-UNIT SELECT 2	22	—	—	—	22	—	
-UNIT SELECT 3	24	—	—	—	24	—	
-UNIT SELECT 4	26	—	—	—	26	—	
-READY 1	28	—	—	—	28	—	
-READY 2	30	—	—	—	30	—	
-READY 3	32	—	—	—	32	—	
-READY 4	34	—	—	—	34	—	
-DOOR UNLOCK 1	—	—	—	—	40	—	
-DOOR UNLOCK 2	—	—	—	—	42	—	
-DOOR UNLOCK 3	—	—	—	—	48	—	
-DOOR UNLOCK 4	—	—	—	—	50	—	
GROUND	1 THRU 49 ODD NO.S ONLY	1 THRU 9, 17 THRU 51 ODD ONLY	26 THRU 48	1 — 15 23 — 49 ODD ONLY	1 — 49 ODD NO.S ONLY	2 — 10 18 — 50 EVEN ONLY	
+5 VOLTS	—	2 & 4	18 & 19	2, 4 & 6	—	1, 3, 7 & 9	
+24 VOLTS	—	12 & 14	24 & 25	18, 20 & 22	—	11, 13 & 15	
+24 VOLTS RETURN	—	11 & 13	49 & 50	17, 19 & 21	—	12, 14 & 16	
-12 VOLTS	—	—	—	14	—	—	
- 5 VOLTS	—	6	21 & 22	10	—	5	
- SECTOR	—	—	—	—	—	—	
-STEP IN	—	46	11	38	—	43	
-STEP OUT	—	44	12	46	—	41	
-SECTOR	—	—	—	—	—	—	

NOTES:
UNLESS OTHERWISE SPECIFIED:
1. RESISTOR VALUES ARE IN K-OHMS 1/4W, 1%
2. CAPACITOR VALUES ARE IN MICRO-FARADS
3. SEE TABLE FOR J1 CONNECTOR PIN DESIGNATIONS. ALL OTHER CONN. NO'S SHOWN IN BODY OF SCHEMATIC
4. DOTTED BOXES INDICATE OPTIONS
5. SEE "TABLE A" FOR COMPONENT VALUES OR I.C. ELEMENT IDENTIFIERS
6. SEE "TABLE B" FOR PWB JUMPER CONFIGURATION
7. THESE PINS RESERVED; VOLTAGES NOT USED
8. FOR EXTERNAL COMPONENT INFORMATION SEE SH. 6
9. NOT PRESENT ON 77624750 ASSY CONFIGURATION.
10. PRESENT ONLY ON 77624750 ASSY CONFIGURATION.

1

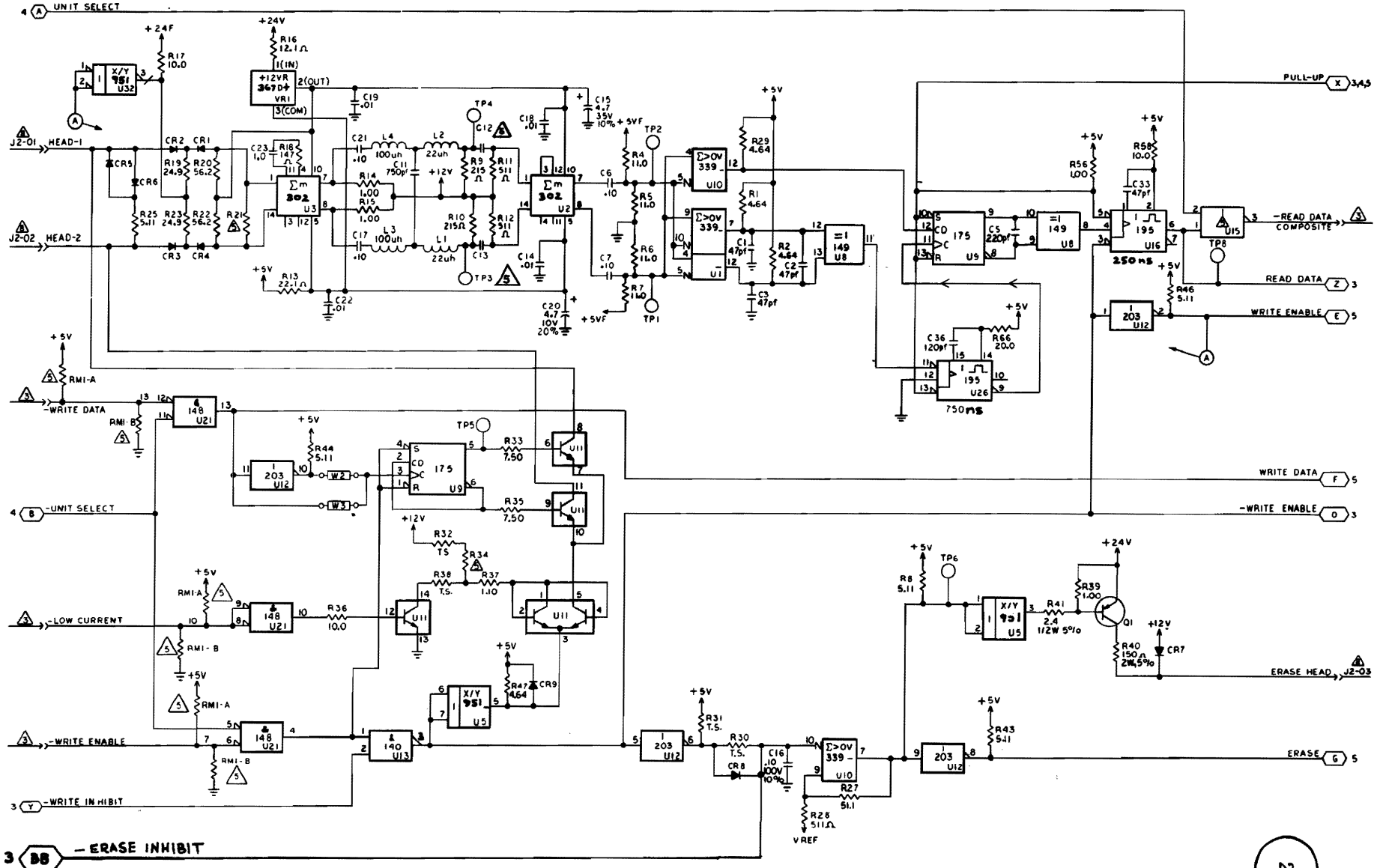

Figure 5-2. Schematics (Sheet 2 of 6)

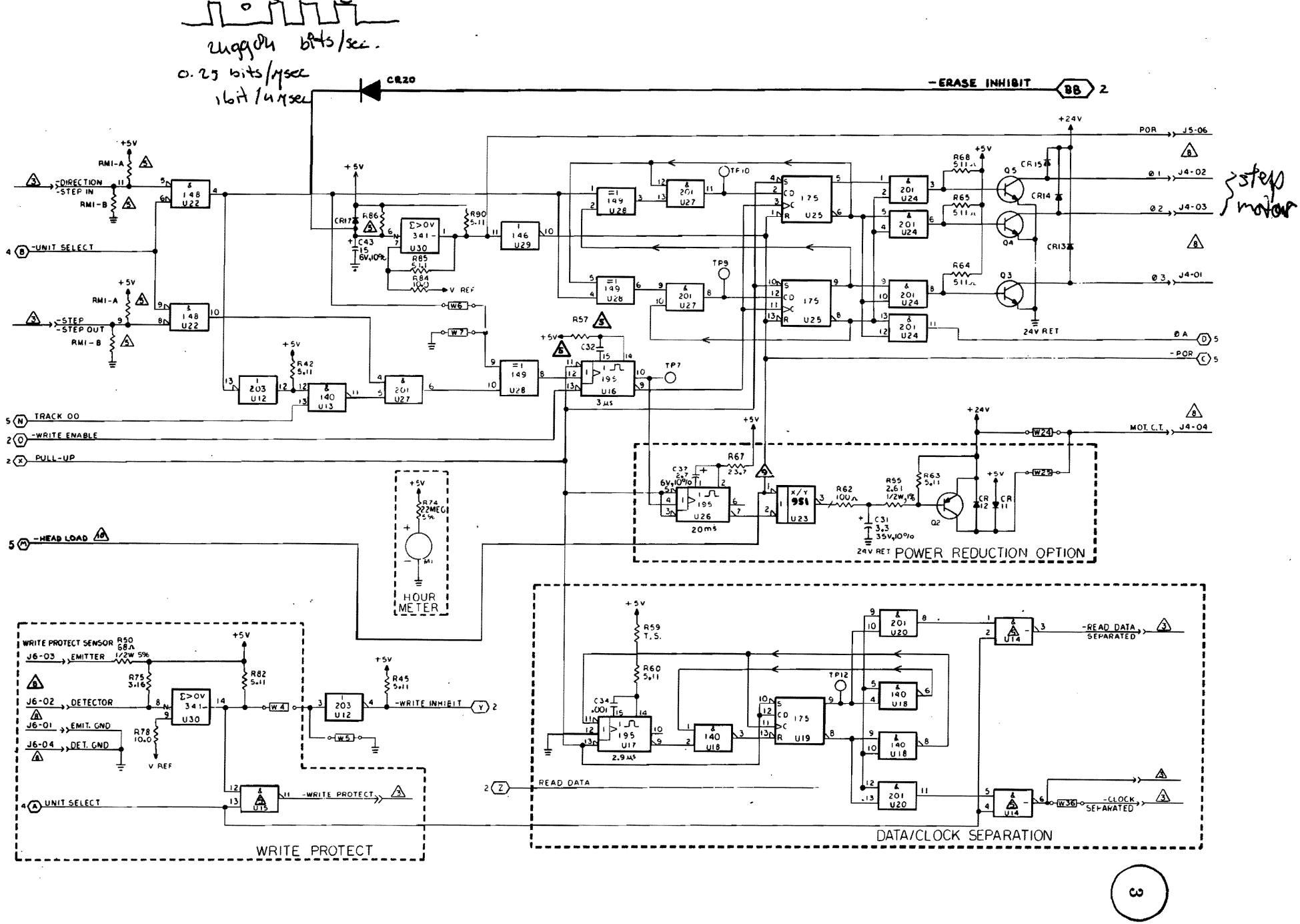

Figure 5-2. Schematics (Sheet 3 of 6)

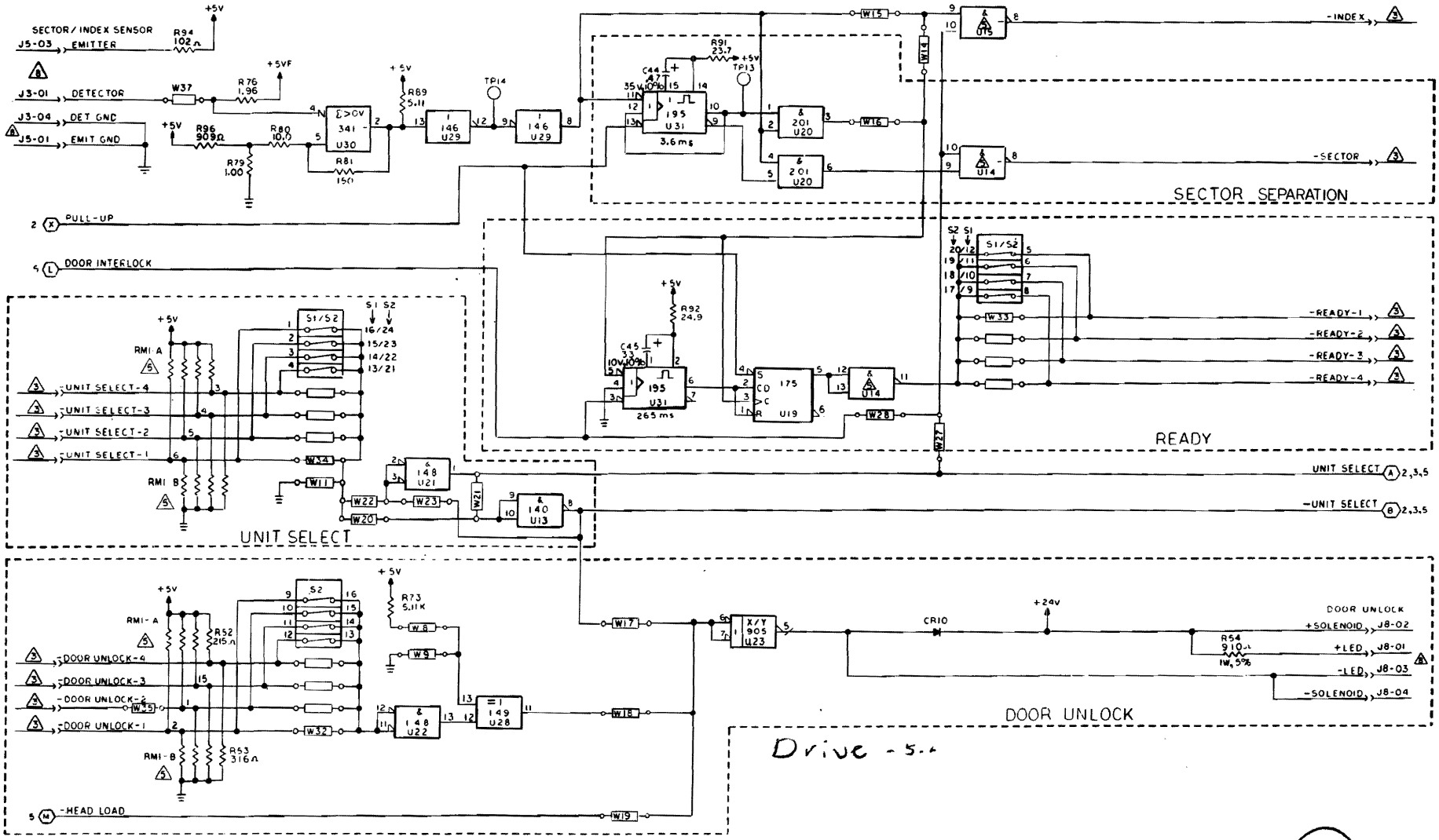

Figure 5-2. Schematics (Sheet 4 of 6)

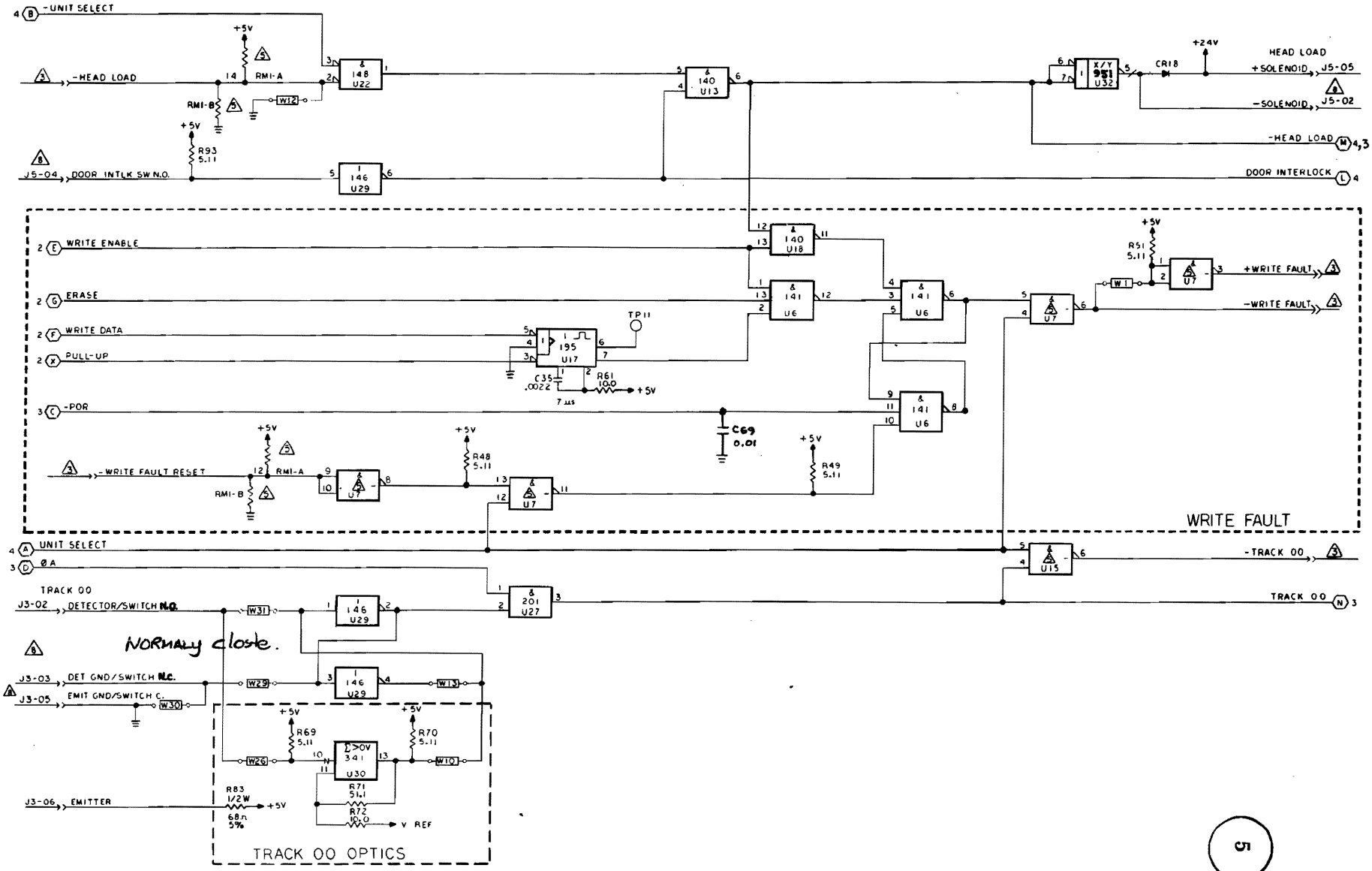

Figure 5-2. Schematics (Sheet 5 of 6)

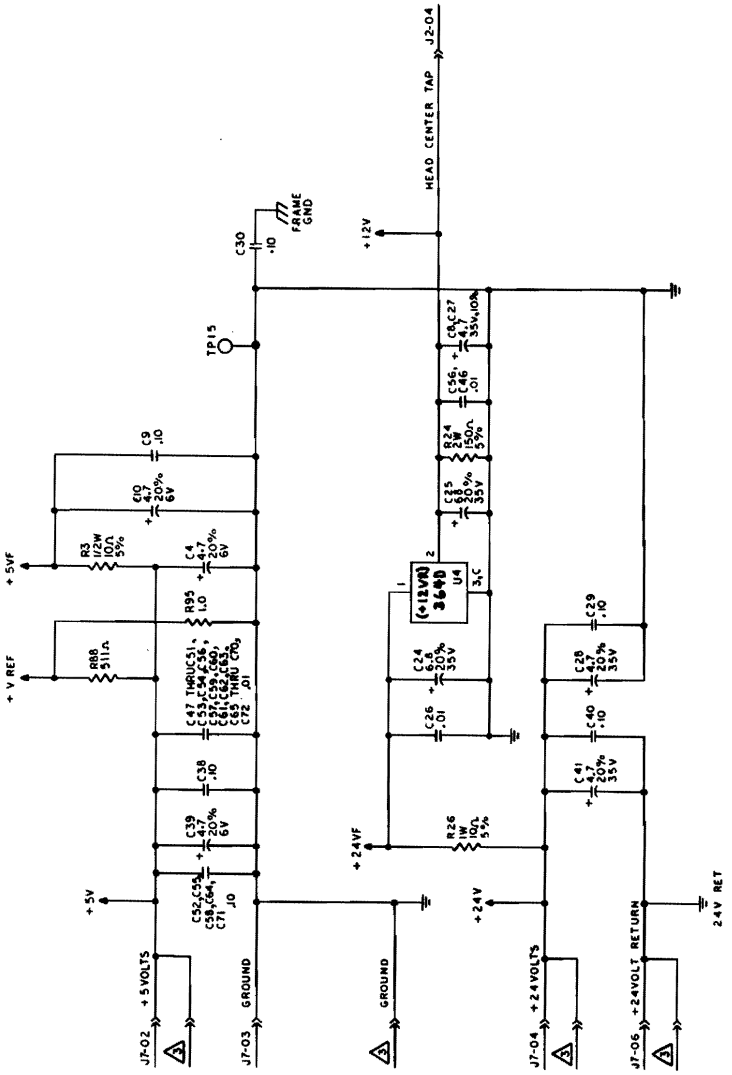

Figure 5-2. Schematics (Sheet 6 of 6)

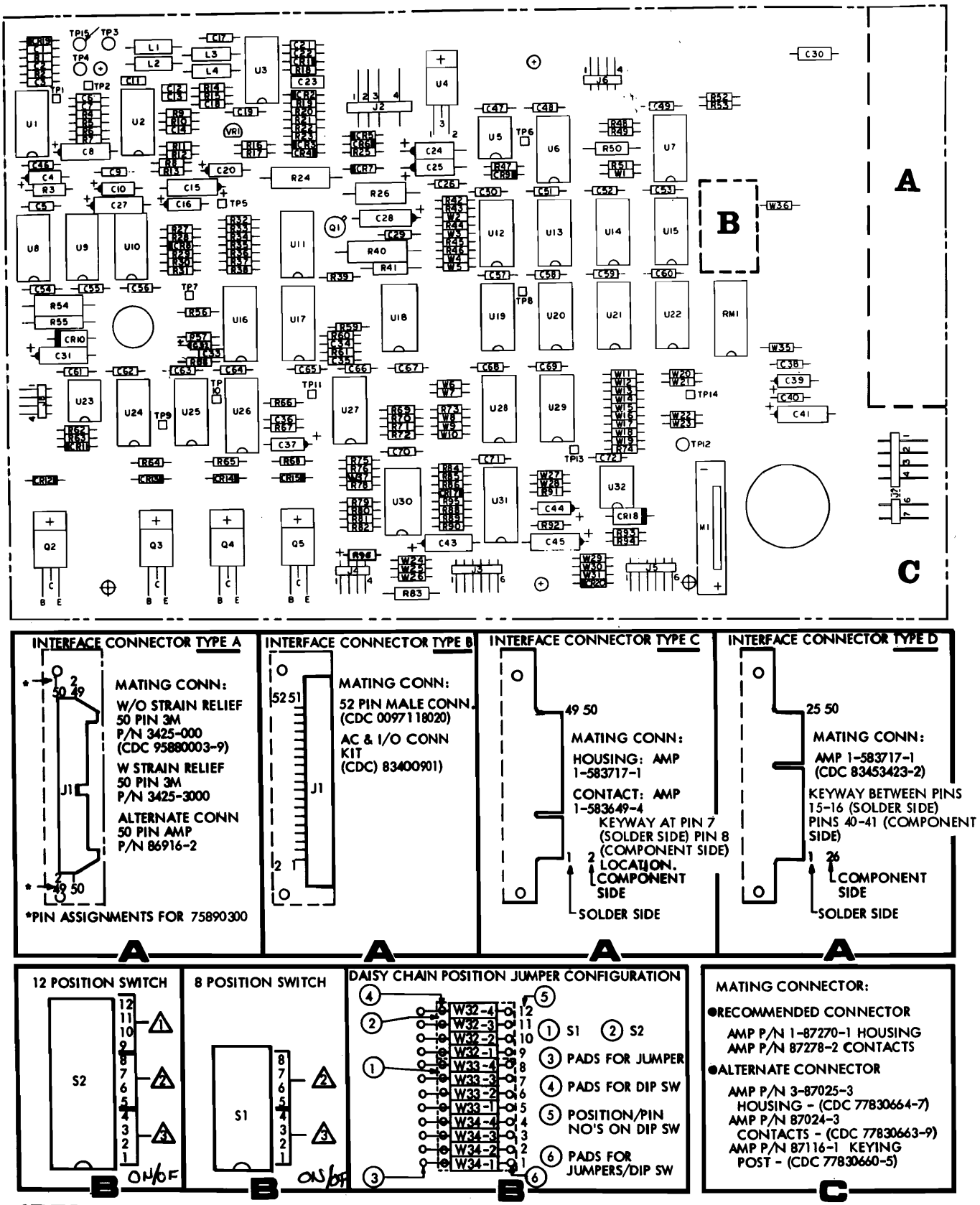

Figure 5-3. Assembly and Parts List (Sheet 1 of 5)

RES	PL ITEM
R1	44
R2	44
R3	69
R4	57
R5	57
R6	57
R7	57
R8	52
R9	41
R10	41
R11	54
R12	54
R13	39
R14	43
R15	43
R16	40
R17	35
R18	78
R19	60
R20	36
R21	37#
R22	36
R23	60
R24	71
R25	52
R26	73
R27	50
R28	54
R29	44
R30	63
R31	63
R32	63
R33	46
R34	54##
R35	46
R36	35
R37	47ΔΔΔ
R38	63
R39	43
R40	71
R41	70
R42	52
R43	52
R44	52
R45	52
R46	52
R47	44

X155a

RES	PL ITEM
R48	52
R49	52
R51	52
R52	62
R53	38
R54	72
R55	67
R56	43
R57	53 •
R58	35
R59	63
R60	52
R61	35
R62	61
R63	52
R64	54
R65	54
R66	45
R67	55
R68	54
R69	52
R70	52
R71	50
R72	36
R73	52
R76	42
R77	
R78	35
R79	43
R80	35
R81	58
R82	52
R84	35
R85	50
R86	51*
R87	
R88	54
R89	52
R90	52
R91	55
R92	60
R93	52
R94	56
R95	43
R96	119

CAP	PL ITEM
C1	84
C2	84
C3	84
C4	92
C5	107
C6	76
C7	76
C8	94
C9	76
C10	92
C11	77
C12	79Δ
C13	79Δ
C14	75
C15	94
C16	95
C17	76
C18	75
C19	75
C20	85
C21	76
C22	75
C23	80
C24	96
C25	96
C26	82
C27	94
C28	102
C29	76
C30	81
C31	98
C32	87••
C33	83
C34	87
C35	88
C36	86
C37	93
C38	76
C39	92
C40	76
C41	102
C42	
C43	91
C44	97
C45	90
C46	76
C47	89

CAP	PL ITEM
C48	
C49	
C50	
C51	
C52	76
C53	
C54	
C55	76
C56	76
C57	
C58	76
C59	
C60	
C61	
C62	
C63	
C64	76
C65	
C66	
C67	
C68	82ΔΔ
C69	82
C70	
C71	76
C72	76
C73	Δ

DIO	PL ITEM
CR1	29
CR2	29
CR3	29
CR4	29
CR5	29
CR6	29
CR7	29
CR8	29
CR9	29
CR10	30
CR11	31
CR12	31
CR13	31
CR14	31
CR15	31
CR16	
CR17	29
CR18	30
CR19	31
CR20	114

IC	PL ITEM
U1	17
U2	16
U3	16
U4	19
U5	4
U6	5
U7	6**
U8	13
U9	11
U10	17
U11	18
U12	7
U13	8
U14	6**
U15	6**
U16	10
U17	10
U18	8
U19	••#
U20	•••
U21	9
U22	9
U23	***
U24	12
U25	11
U26	10
U27	12
U28	13
U29	14
U30	15
U31	
U32	4

RES MOD	PL ITEM
RM 1	20###

MET	PL ITEM

REG	PL ITEM
VR1	74

JMPR	PL ITEM
W1	106
W2	106
W3	
W4	106
W5	106
W6	106
W7	106
W8	106
W9	
W10	
W11	106
W12	106
W13	106
W14	106
W15	106
W16	106
W17	106
W18	106
W19	
W20	106
W21	106
W22	106
W23	106
W24	106
W25	106
W26	
W27	106
W28	106
W29	106
W30	
W31	106
W32	
W33	
W34	
W35	106
W36	106
W37	106

IND	PL ITEM
L1	65
L2	65
L3	64
L4	64

CONN	PL ITEM
J1	22
J2	23
J3	116
J4	25
J5	24
J6	25
J7	100
	101
J8	25

TSTR	PL ITEM
Q1	28
Q2	27
Q3	26
Q4	26
Q5	26

SW	PL ITEM
S1	32
S2	33

*EXCEPT 77890300 WHICH IS ITEM 118
**EXCEPT 77890400 AND 77614500 WHICH IS ITEM 121
#EXCEPT 77890400 WHICH IS ITEM 118
##EXCEPT 77890400 WHICH IS ITEM 120
###EXCEPT 77614500 WHICH IS ITEM 122.
• EXCEPT 75896300 WHICH IS ITEM 45
•• EXCEPT 75896300 WHICH IS ITEM 124
*** EXCEPT 75892150 WHICH IS ITEM 4
••# EXCEPT 77614500 WHICH IS ITEM 11
••• EXCEPT 77614500 WHICH IS ITEM 12
Δ EXCEPT 75890400 WHICH IS ITEM 123
ΔΔ EXCEPT 75890300, 75890400, 75890550, 75892150, 77614500 WHICH ARE BLANK
ΔΔΔ EXCEPT 75890400 WHICH IS ITEM 125

Figure 5-3. Assembly and Parts List (Sheet 2 of 5)

Item No.	Part Number	Description	Remarks
2	75890320-7	PWB Improved FDD - Std	(6)
2	75890370-2	PWB Improved FDD - H	(7)
2	75890420-5	PWB Improved FDD-D/G	(8)
2	75890770-3	PWB Improved FDD-P	(10)
2	77624770-2	PWB Improved FDD-D/S	(11)
2	75890570-7	PWB Improved FDD-N	(9)
4	15161600-0	IC 75461 Driver, Dual Peripheral	
5	66299100-9	IC 7410 Triple 3-Input NAND	
6	15158300-2	IC 7438 Quad 2-Input NAND Buffer (OC)	(1)
7	15161300-7	IC 7405 Hex Invert (Open Collector)	
8	66299099-3	IC 7400 Quad 2- Input NAND	
9	66299103-3	IC 7402 Quad 2-Input NOR	
10	15104301-5	IC 9602 MV, Dual Retrigger TTL	
11	96744156-9	IC 7474 TTL Dual D Type F/F	
12	88897000-1	IC 7408 TTL Quad 2-Input AND	
13	88885700-0	IC 7486 TTL Quad 2-Input Exclusive OR	
14	39389700-4	IC 7404 TTL Hex Inverter	
15	95794600-7	IC LM339 Comparator, Quad	
16	15163100-9	IC 733C	
17	15161800-6	IC LM319 Comparator, Dual	
18	77832315-4	IC 3086 Transistor Array, 3 Single 1 current	
19	15161100-1	78M12 Voltage Regulator	
20	95894500-8	Res Pac 220/330	
21	94260301-0	Socket 16 Pin	(2)
21	51848401-1	Socket 16 Pin	(5)
22	94359504-1	Header-Flat Cable	(3)
22	75773900-8	Header-Right Angle	(4)
23	75772401-8	Connector Hdr	
24	75743719-9	Header-Right Angle	
25	75743717-3	Header-Right Angle	
26	77836043-8	Transistor T1P120	
27	77836044-6	Transistor T1P125	
28	77835186-6	Transistor 2N2907A	
29	51736700-9	Diode 1N914A	
30	56142000-1	Diode-Silicon	
31	94616400-1	Diode	
32	83452205-4	Switch-8 Position	
33	83452209-6	Switch-12 Position	
35	94360400-9	Res 1/4W 1% 10.0K	
36	94360472-8	Res 1/4W 1% 56.2K	
37	94360388-6	Res 1/4W 1% 8.25K	
38	94360248-2	Res 1/4W 1% 316	
39	94360133-6	Res 1/4W 1% 22.1	
40	94360108-8	Res 1/4W 1% 12.1	
41	94360232-6	Res 1/4W 1% 215	
42	94360328-2	Res 1/4W 1% 1.96K	
43	94360300-1	Res 1/4W 1% 1.0K	
44	94360364-7	Res 1/4W 1% 4.64K	
45	94360429-8	Res 1/4W 1% 20.0K	
46	94360384-5	Res 1/4W 1% 7.50K	
47	94360304-3	Res 1/4W 1% 1.10K	
50	94360468-6	Res 1/4W 1% 51.1K	
51	94360448-8	Res 1/4W 1% 31.6K	

Figure 5-3. Assembly and Parts List (Sheet 3 of 5)

Item No.	Part Number	Description	Remarks
52	94360368-8	Res 1/4W 1% 5.11K	
53	94360390-2	Res 1/4W 1% 8.66K	
54	94360268-0	Res 1/4W 1% 511	
55	94360436-3	Res 1/4W 1% 23.7K	
56	94360201-1	Res 1/4W 1% 102	
57	94360404-1	Res 1/4W 1% 11.0K	
58	94360517-0	Res 1/4W 1% 150K	
60	94360438-9	Res 1/4W 1% 24.9K	
61	94360200-3	Res 1/4W 1% 100	
62	94360232-6	Res 1/4W 1% 215	
63	94357500-1	Resistor Test Select	
64	75887607-2	Inductor 5% 100 UH	
65	75887599-1	Inductor 5% 22 UH	
67	92577340-0	Res 1/2W 1% 2.61K	
68	24500235-9	Res 1/2W 5% 68	
69	24500115-1	Res 1/2W 5% 10	
70	24500172-2	Res 1/2W 5% 2.4K	
71	24504843-4	Res 2W 5% 150	
72	24507162-6	Res 1W 5% 910	
73	24507101-4	Res 1W 5% 10	
74	83452805-1	78L12 AWC Volt Reg.	
75	92496227-7	Cap 100V 20% .01UF	
76	94361400-8	Cap 50V +80-20% 0.10UF	
77	94227247-7	Cap 100V 2% 750	
78	94360216-9	Res 1/4W 1% 147	
79	94227238-6	Cap 100V 2% 330	
80	77830567-2	Cap 25V + 80 -20% 1.0UF	
81	75890977-4	Cap 100V 0.10 UF	
82	75808537-7	Cap 100V 10% 0.01 UF	
83	94227218-8	Cap 500V +/- 1 PF 47	
84	75808509-6	Cap 100V 10% 47	
85	24504346-8	Cap 10V 20% 4.7UF	
86	75808514-6	Cap 100V 10% 120	
87	75808525-2	Cap 100V 10% 1000	
88	75808529-4	Cap 100V 10% 2200	
90	17706718-8	Cap 10V 10% 33 UF	
91	24505263-4	Cap 6V 10% 15 UF	
92	24504310-4	Cap 6V 20% 4.7UF	
93	24505254-3	Cap 6V 10% 2.7UF	
94	24505237-8	Cap 35V 10% 4.7 UF	
95	75808549-2	Cap 100V 10% 0.10UF	
96	24504339-3	Cap 35V 20% 6.8UF	
97	24505225-3	Cap 35V 10% .47UF	
98	24505235-2	Cap 35V 10% 3.3UF	
100	77600000-2	Right Angle Header	

Figure 5-3. Assembly and Parts List (Sheet 4 of 5)

Item No.	Part Number	Description	Remarks
101	77600002-8	Right Angle Header	
102	24504337-7	Cap 35V 20% 4.7UF	
103	10125103-1	Scr Nut-Hex Mach 4-40	
104	10126400-0	Washers Ext Tooth Lo	
105	93640012-6	Stud-Self Clinching	
106	77832252-9	Lead, Electrical	
107	75808517-9	Cap 100V 10% 220	
113	92498021-2	Terminal, Swaged	
114	77612009-9	Diode, 1N770	
115	94360348-0	Res 1/4W 1% 3.16K	
116	75743718-1	Header-Right Angle	
118	94360380-3	Res 1/4W 1% 6.81K	
119	94360292-0	Res 1/4W 1% 909	
120	94360256-5	Res 1/4W 1% 383	
121	88885600-2	IC 7437	
122	75738655-2	Resistor Module	
123	94227250-1	Cap 100V 2% 1000	
124	38879326-7	Cap 50V 20% 0.68 UF	

NOTES:

(1) Not Used on 75890400 & 77614500
(2) Used on 75890600 & 75890750 Only
(3) Not Used on 75890300, 75890350, 75890550, 75892150 & 77614500.
(4) Used on 75890550 & 77614500 Only
(5) Used on 75890450, 75890500, 75890650, 75890700
(6) Used on 75890300 Only
(7) Used on 75890350 & 75892150 Only
(8) Used on 75890400 Only
(9) Used on 75890550 & 77614500 Only
(10) Used on 75890450, 75890500, 75890600, 75890650, 75890700 & 75890750 Only

Figure 5-3. Assembly and Parts List (Sheet 5 of 5)

6.1 INTRODUCTION

This section contains the instructions required to maintain the FDD. The information is provided in the form of preventive maintenance, troubleshooting and corrective maintenance.

6.2 MAINTENANCE TOOLS

The special tools (or equivalent) required to maintain an FDD are as follows:

DESCRIPTION	CDC PART NUMBER
Alignment Diskette (Optional)	Model 421-51W
Outer Stop Gauge	83401300
Inner Stop Gauge	83401400

The standard tools required to maintain the FDD are as follows:

- Socket Wrenches
  Sizes: 5/16" (7.94mm), 1/4" (6.35mm), 3/16" (4.76mm), 11/32" (8.73mm)
- Allen Wrenches
  Sizes: 0.050" (1.27mm), 1/16" (1.59mm), 5/64" (1.98mm), 7/64" (2.78mm)
- Oscilloscope, Tektronix 335, or equivalent.
- Feeler Gauges, wire
  Sizes: 0.030" (0.762mm), 0.058" (1.47mm), 0.060" (1.52mm), 0.062" (1.58mm), 0.072" (1.83mm), 0.079" (2.01mm)
- Feeler Gauge, Shim: 0.072" (1.83mm)

6.3 PREVENTIVE MAINTENANCE

The head load pad should be inspected after 650 hours of head-load time. If pad is worn, dirty, torn, or loose it should be replaced. (See paragraph 6.7.4).

6.4 HEAD CLEANING

On occasions the Read/Write head may require cleaning. If this situation occurs clean head as follows:

CAUTION

Do not smoke while cleaning. Do not touch a head surface with fingers. Do not leave residue or lint on the head surfaces. Residual particles can result in a scored disk and/or loss of a head.

Do not raise head-load arm to the 90-degree position and then release it; damage to the load-arm spring and/or to the head (core and ceramics) could result.

a. Use lint-free cloth to lightly drybuff head surface. Cleaning is completed if deposits are removed.

b. If oxide deposits were not removed in step (a), dampen (do not soak) cloth with cleaning solution (91% isopropyl alcohol) and wipe head surface. Finish by lightly dry buffing again to ensure that the head is dry and no alcohol residue is left.

6.5 TROUBLESHOOTING

An improperly adjusted FDD may exhibit symptoms of one that has a malfunction; therefore, the Adjustment Procedures (paragraph 6.6) should be performed before assuming that the unit has failed. If the malfunction still exists after the performance of the adjustment procedures, consult Table 6-1 and the Troubleshooting Flow Charts for the symptoms observed, checks to be made, and action to be taken. Refer to Figure 6-1 for test points. Before troubleshooting is started, check all DC supply voltages.

Table 6-1. Flowchart Reference

Flowchart Paragraph No.	Symptoms
6.5.2	Diskette Not Rotating
6.5.3	Read Signal Missing
6.5.4	Drive Not Responding to Commands
6.5.5	Index Pulse Missing
6.5.6	Head Not Loading
6.5.7	Read/Write Head Stepping
6.5.8	No Track 00 Indication
6.5.9	Read Errors
6.5.10	Write Errors
6.5.11	Write Protect Inoperative

6.5.1 DC VOLTAGE AND SIGNAL CHECK

a. Input power should be +5VDC ±5% and +24VDC ±10% measured at the input to the FDD (refer to paragraph 3.4.2).

b. Test Points: The signals at the test points should conform to the various diagrams and waveforms as listed:

Test Point No.	Refer to Fig. No.	Comments
1	5-1	Differentiated Analog
2	5-1	Read Data (Differential)
3	5-1, 6-2, 6-3	Analog Read Data
4	5-1, 6-2, 6-3	(Differential)
5	5-1, 6-4	Write flip flop
6	- - -	Not for Field Use*
7	5-1	Stepper One-Shot
8	5-1	+Composite Read Data
9	5-1	Stepper Steering Logic

*Erase current should be 80mA typically into J2-03 when the FDD is write enabled.

b. -contd.

Test Point No.	Refer to Fig. No.	Comments
10	5-1	Stepper Steering Logic
11	---	Not for Field Use**
12	5-1	3/4 Cell Timing
13	5-1	Sector One-Shot
14	5-1	Index/Sector

c. Signals should conform to Figure 5-1 and Figures 6-1 through 6-4.

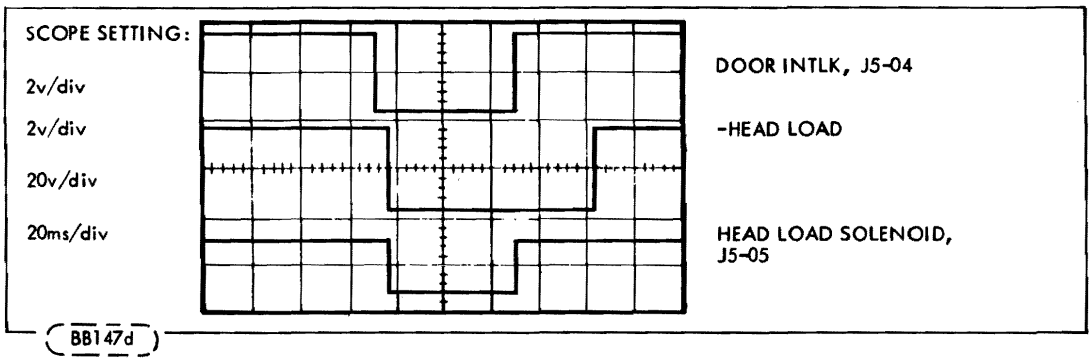

Figure 6-1. -Head Load and Door Interlock Switch

**A Write Fault should occur when the FDD is Write Enabled and no Write Data is sent.

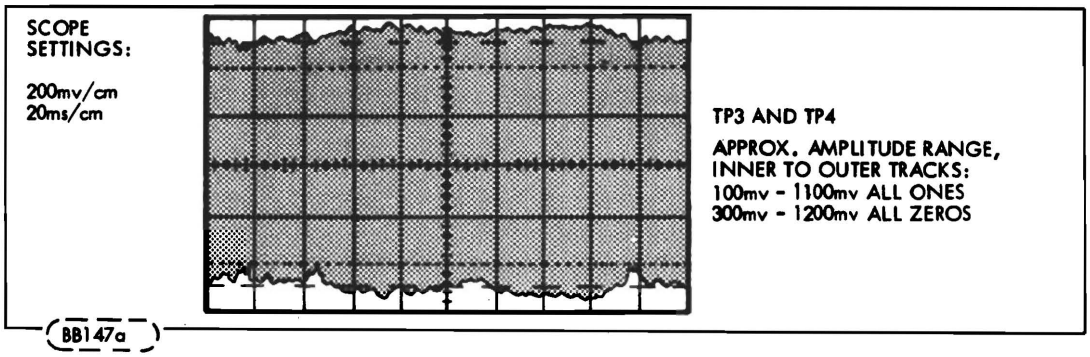

Figure 6-2. Differential Read Signal for Entire Track

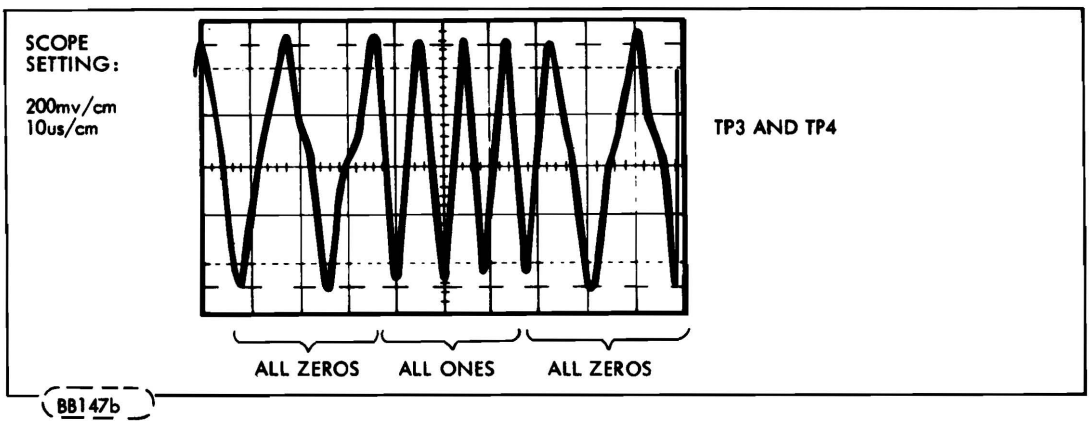

Figure 6-3. Differential Read Signal for Portion of Outer Track

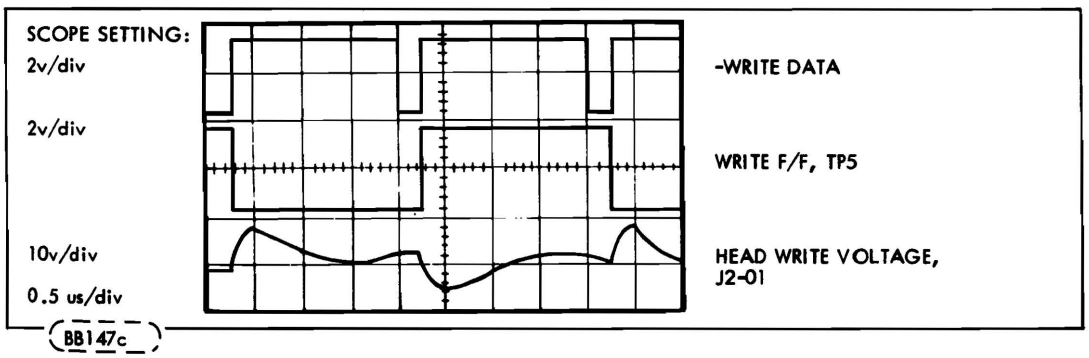

Figure 6-4. Write Data, Write F/F Output, and Head Write Voltage for Outer Track

6.5.2 DISKETTE NOT ROTATING

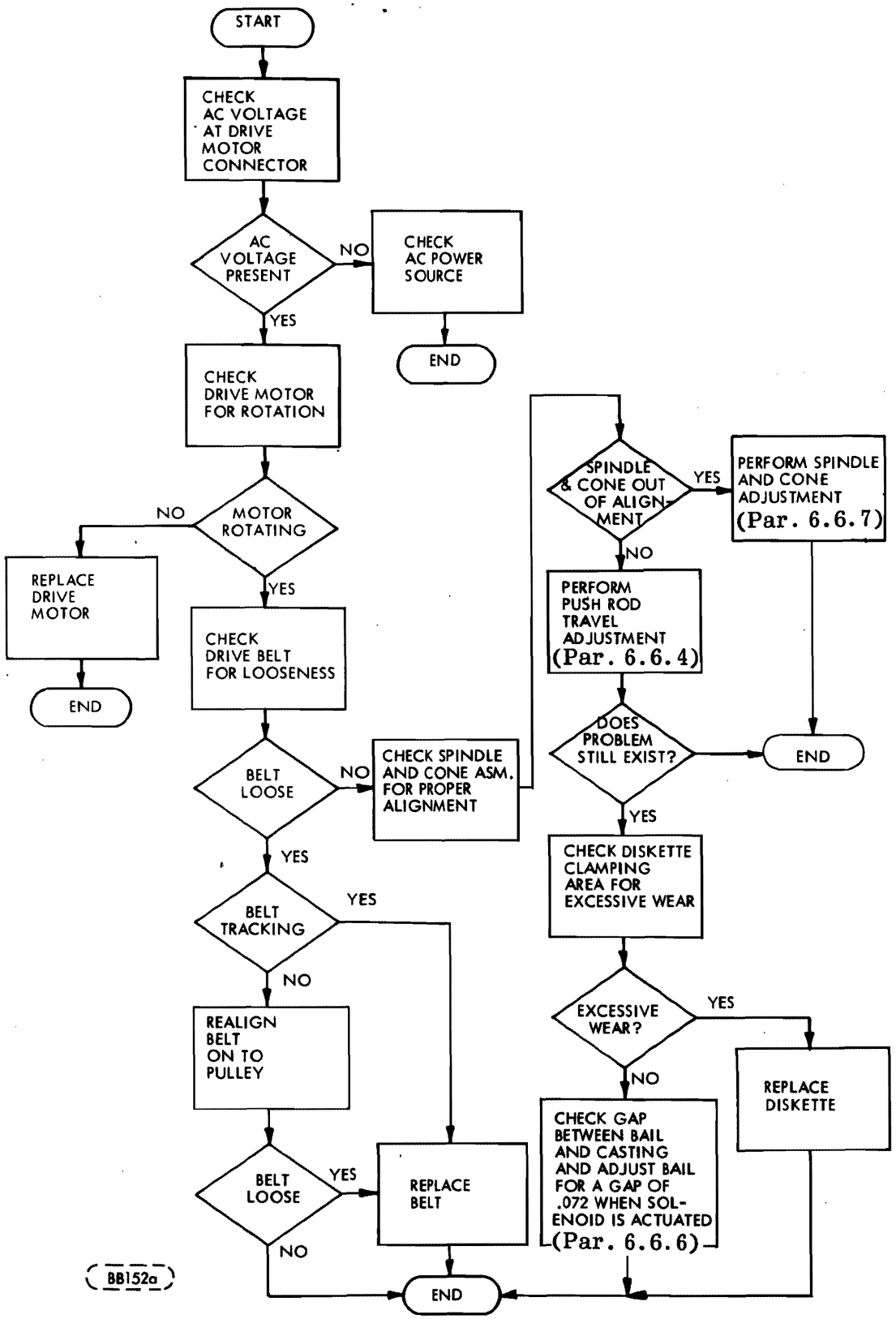

6.5.3 READY SIGNAL MISSING (Daisy Chain Units)

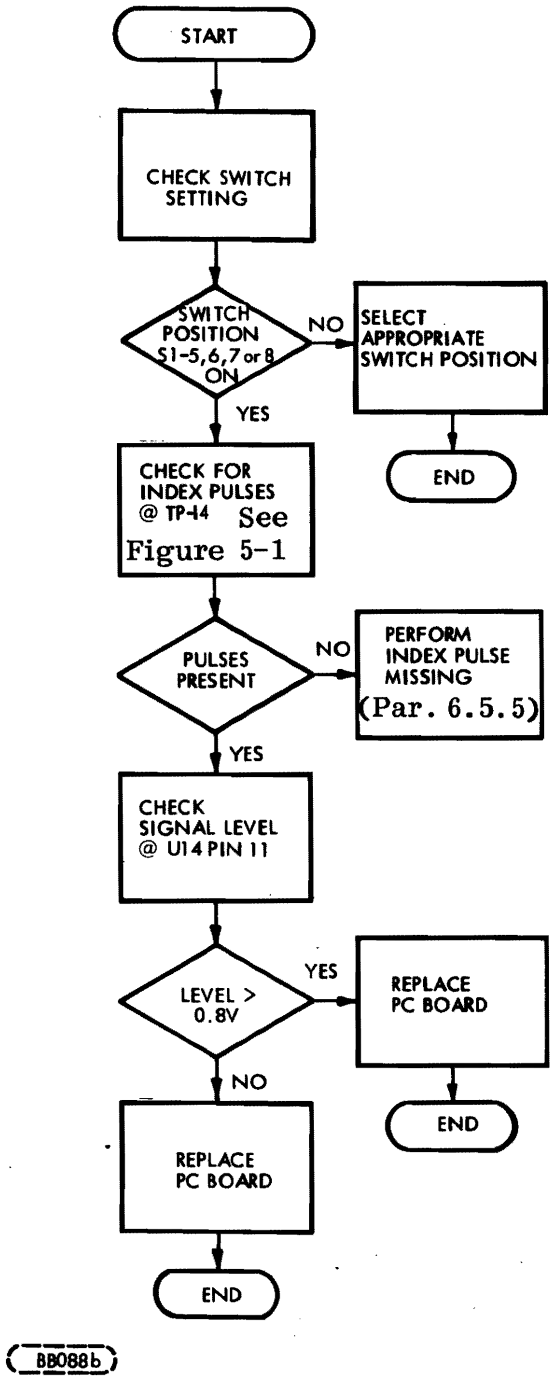

6.5.4 DRIVE NOT RESPONDING TO COMMANDS (Daisy Chain Units)

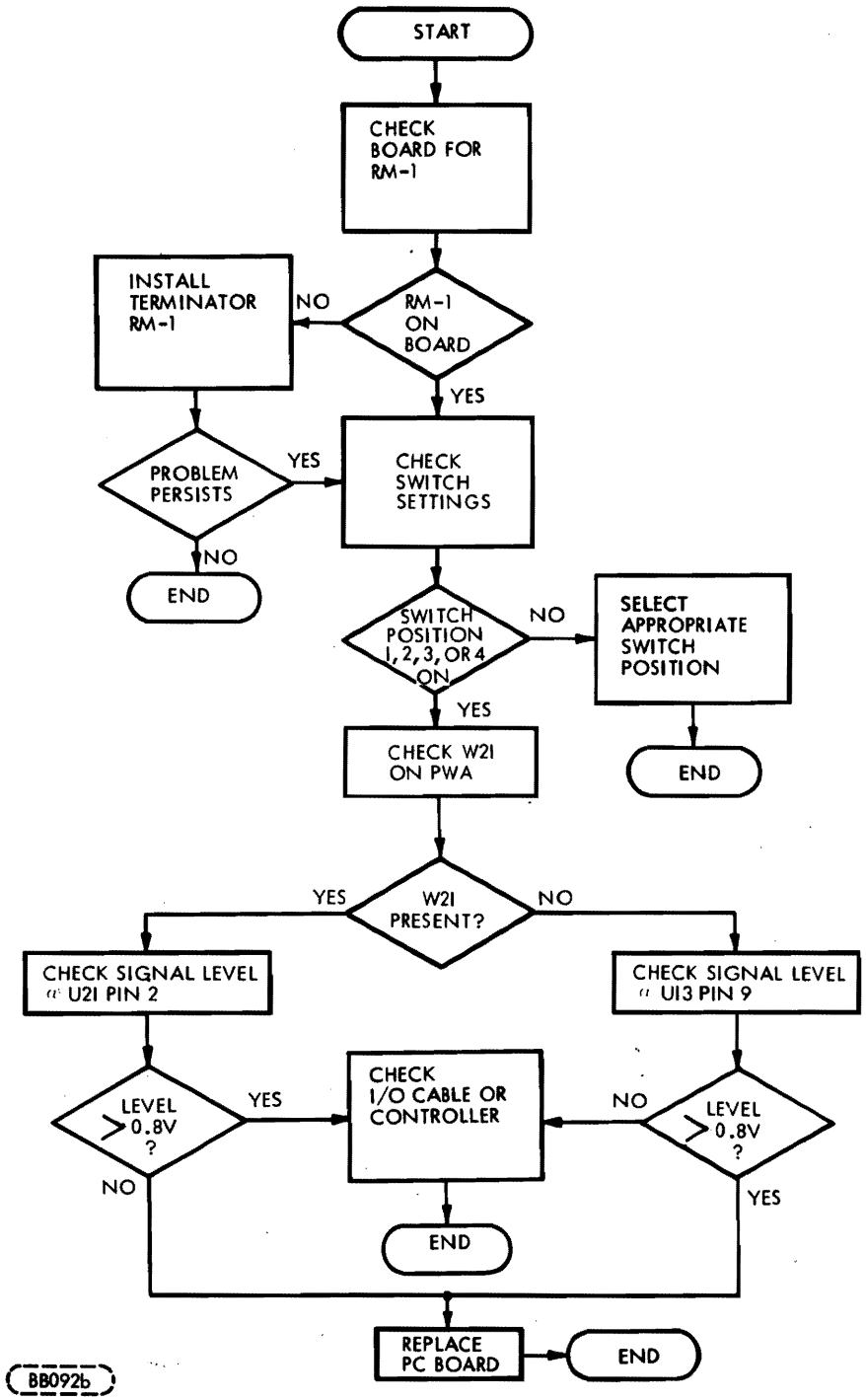

6.5.5 INDEX PULSE MISSING

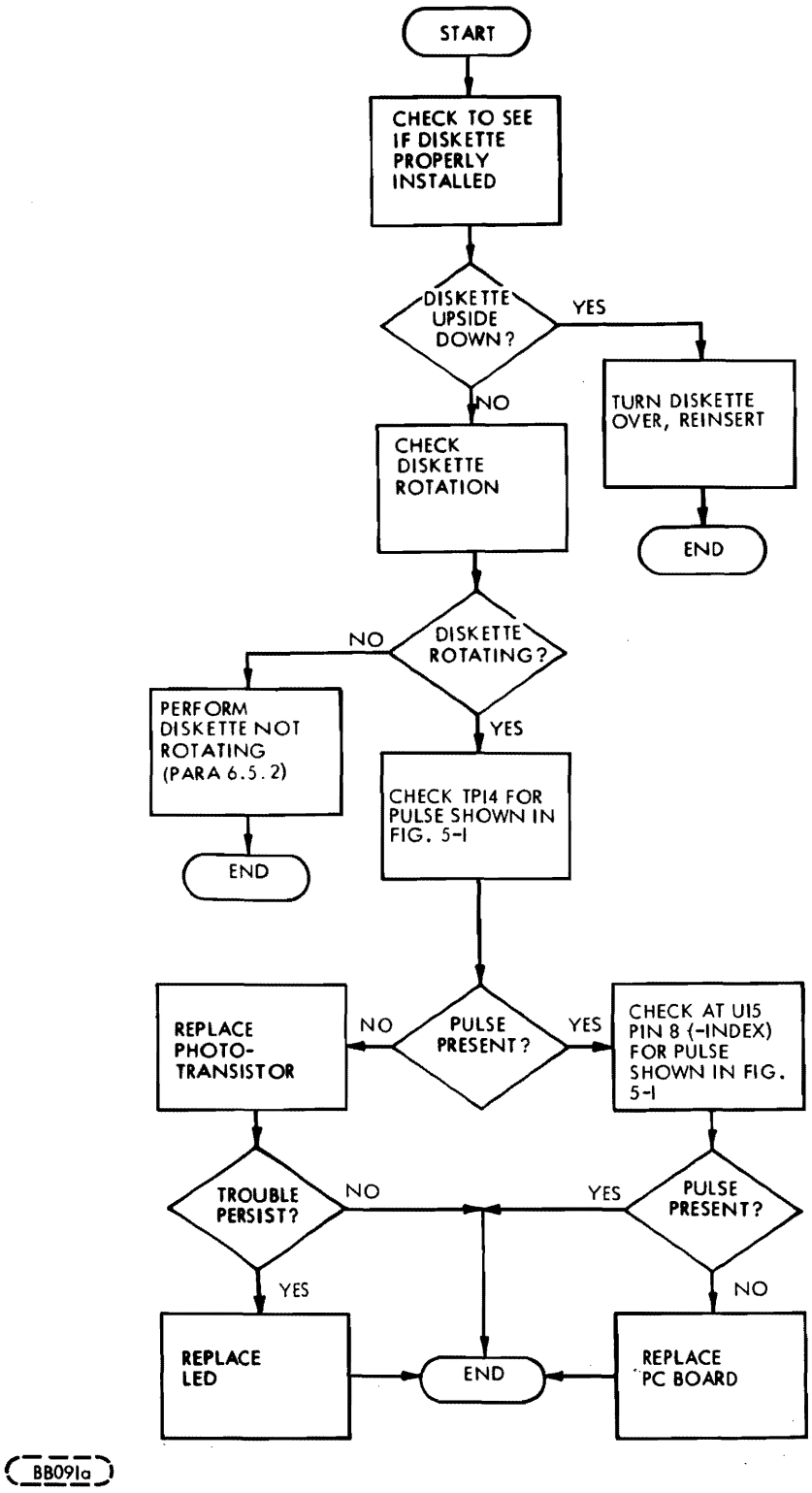

6.5.6 HEAD NOT LOADING

(Perform procedure 6.5.4 prior to performing this trouble shooting procedure).

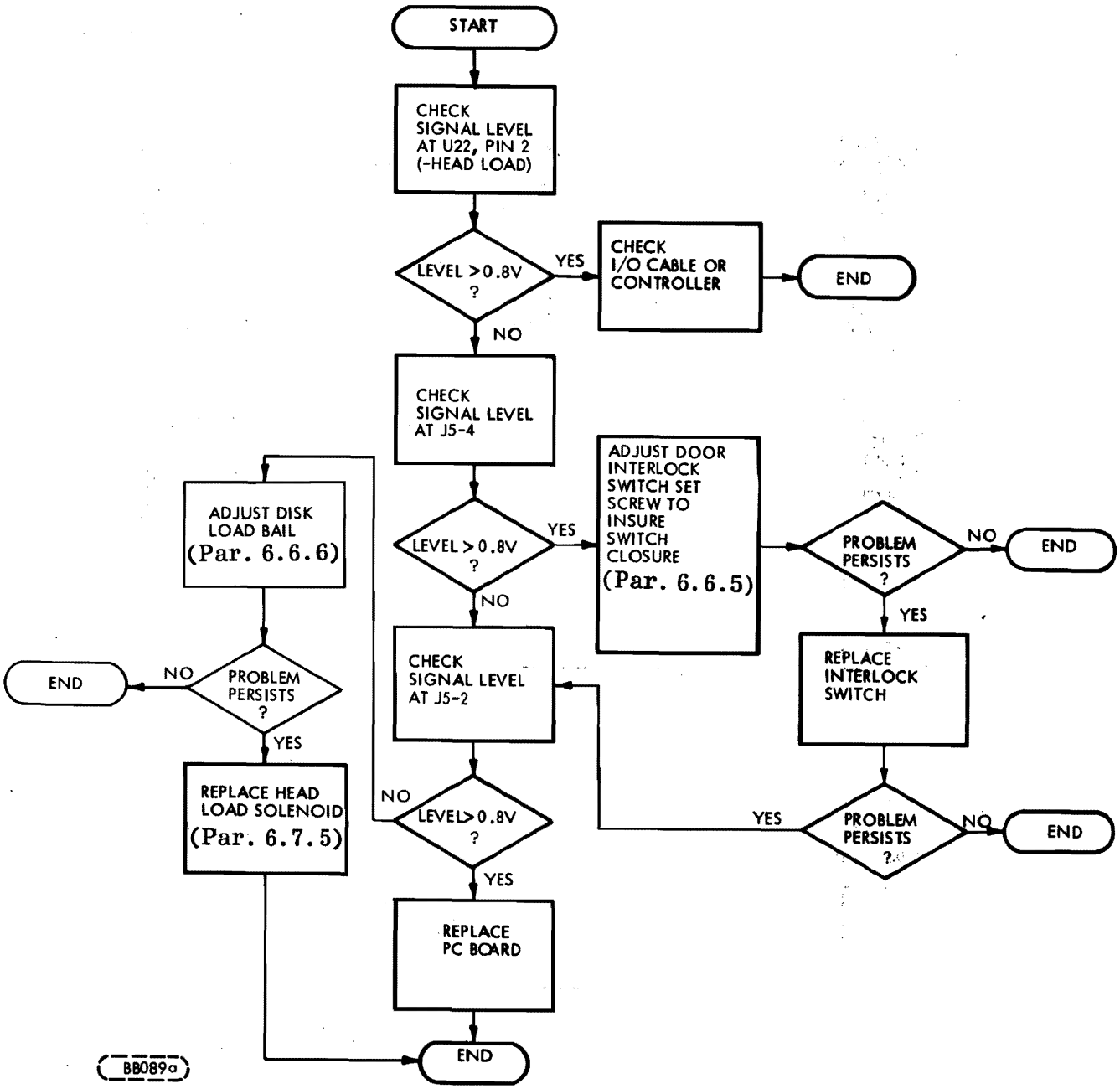

6.5.7 READ/WRITE HEAD NOT STEPPING

Refer to 6.5.4 prior to starting this trouble shooting procedure.

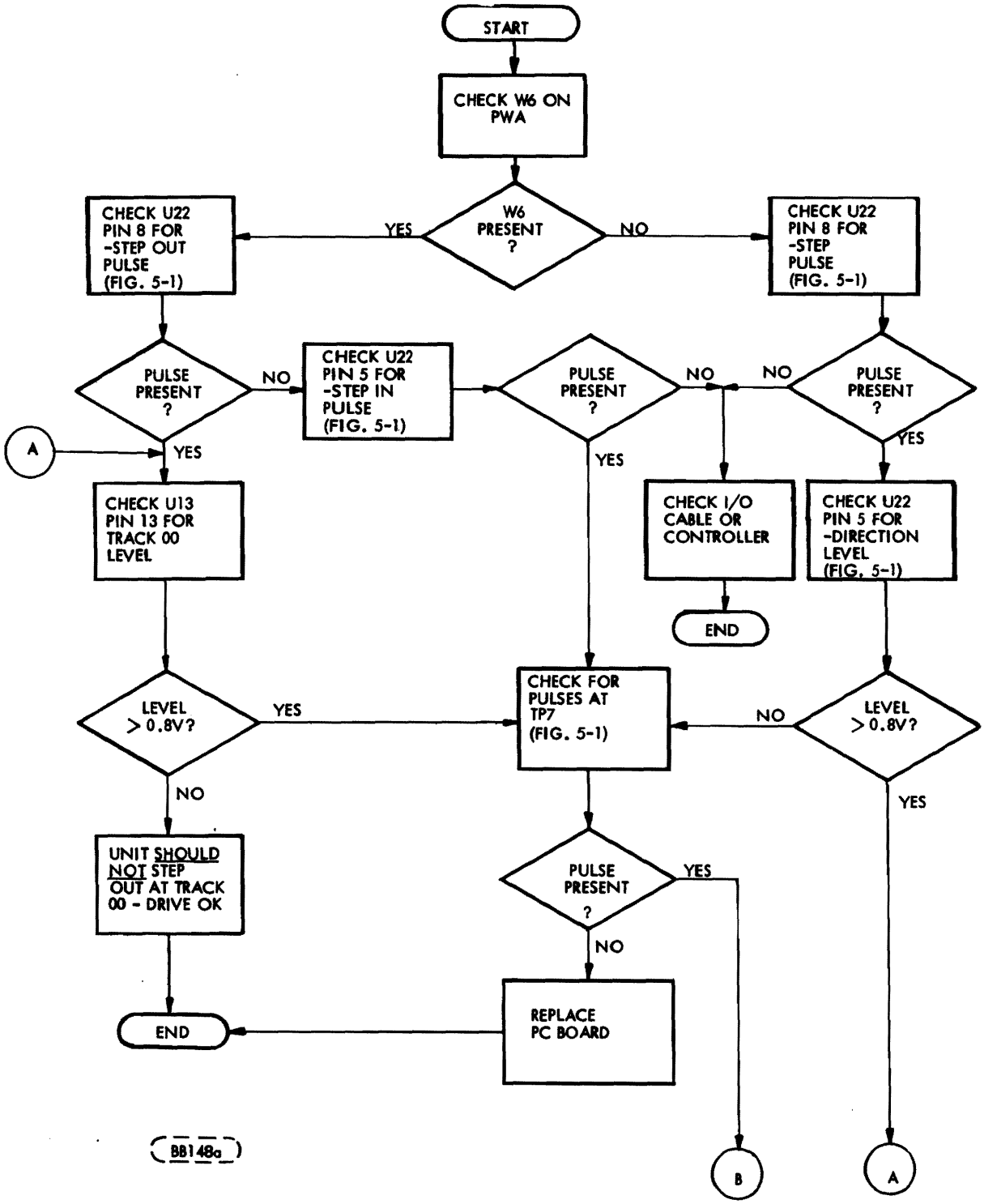

6.5.7 -contd.

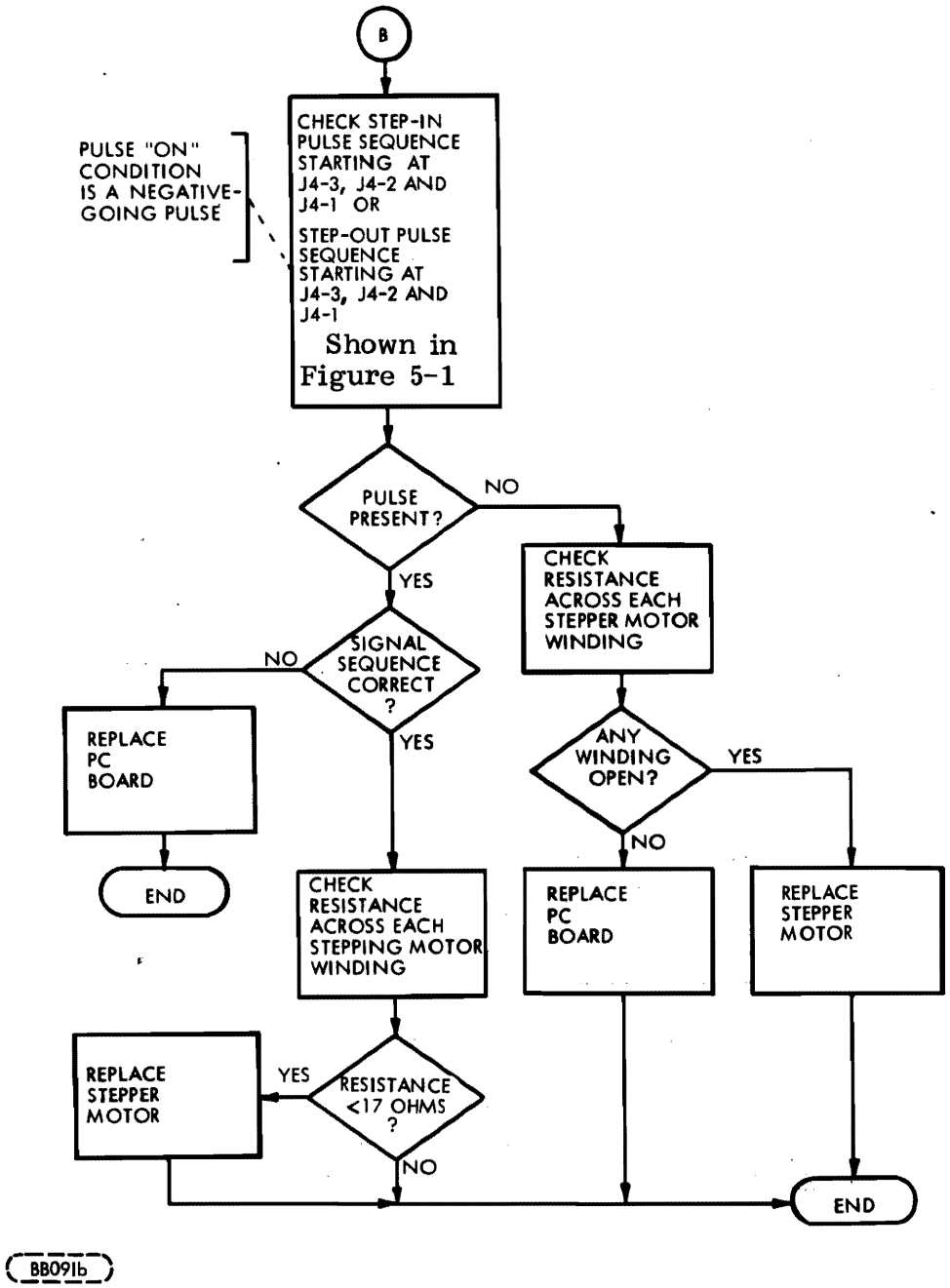
B
CHECK STEP-IN PULSE SEQUENCE STARTING AT J4-3, J4-2 AND J4-1 OR
STEP-OUT PULSE SEQUENCE STARTING AT J4-3, J4-2 AND J4-1
Shown in Figure 5-1
PULSE "ON" CONDITION IS A NEGATIVE-GOING PULSE
PULSE PRESENT?
NO
YES
CHECK RESISTANCE ACROSS EACH STEPPER MOTOR WINDING
SIGNAL SEQUENCE CORRECT ?
NO
YES
REPLACE PC BOARD
END
ANY WINDING OPEN?
YES
NO
CHECK RESISTANCE ACROSS EACH STEPPING MOTOR WINDING
REPLACE PC BOARD
REPLACE STEPPER MOTOR
REPLACE STEPPER MOTOR
YES
RESISTANCE <17 OHMS ?
NO
END
BB09Ib

6.5.8 NO TRACK '00' INDICATION

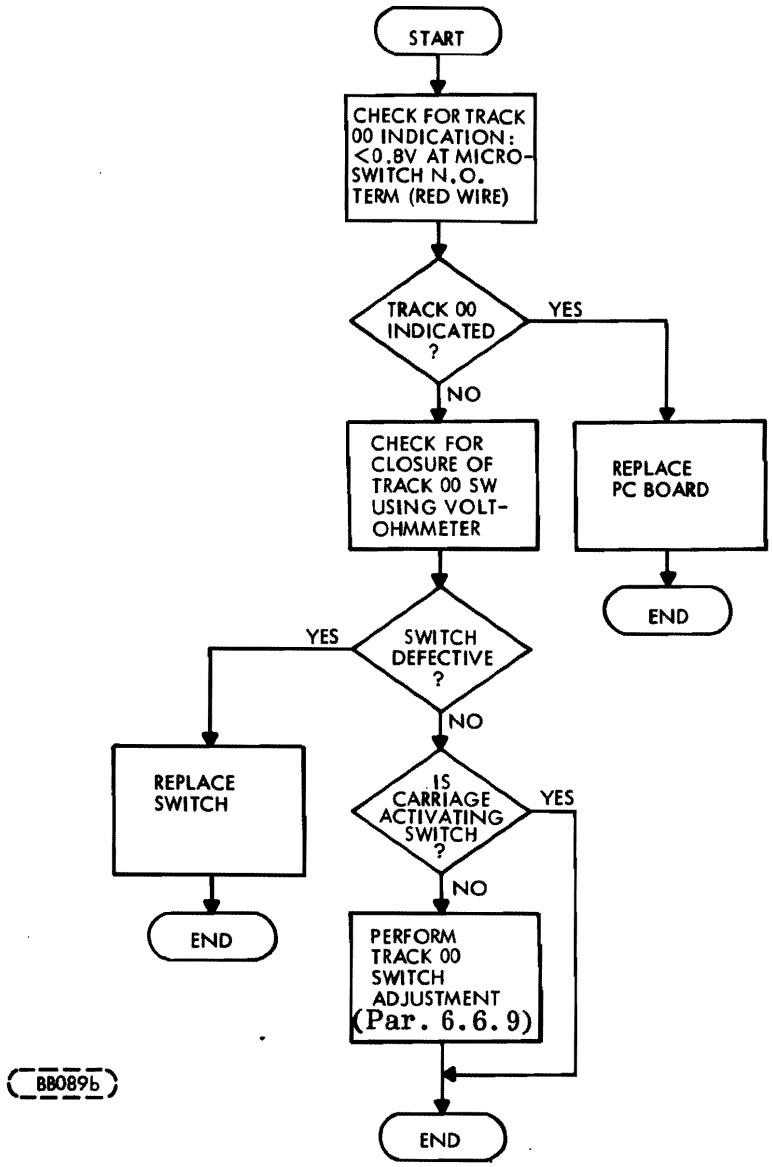

6.5.9 READ ERRORS

Refer to 6.5.4 prior to starting this trouble shooting procedure.

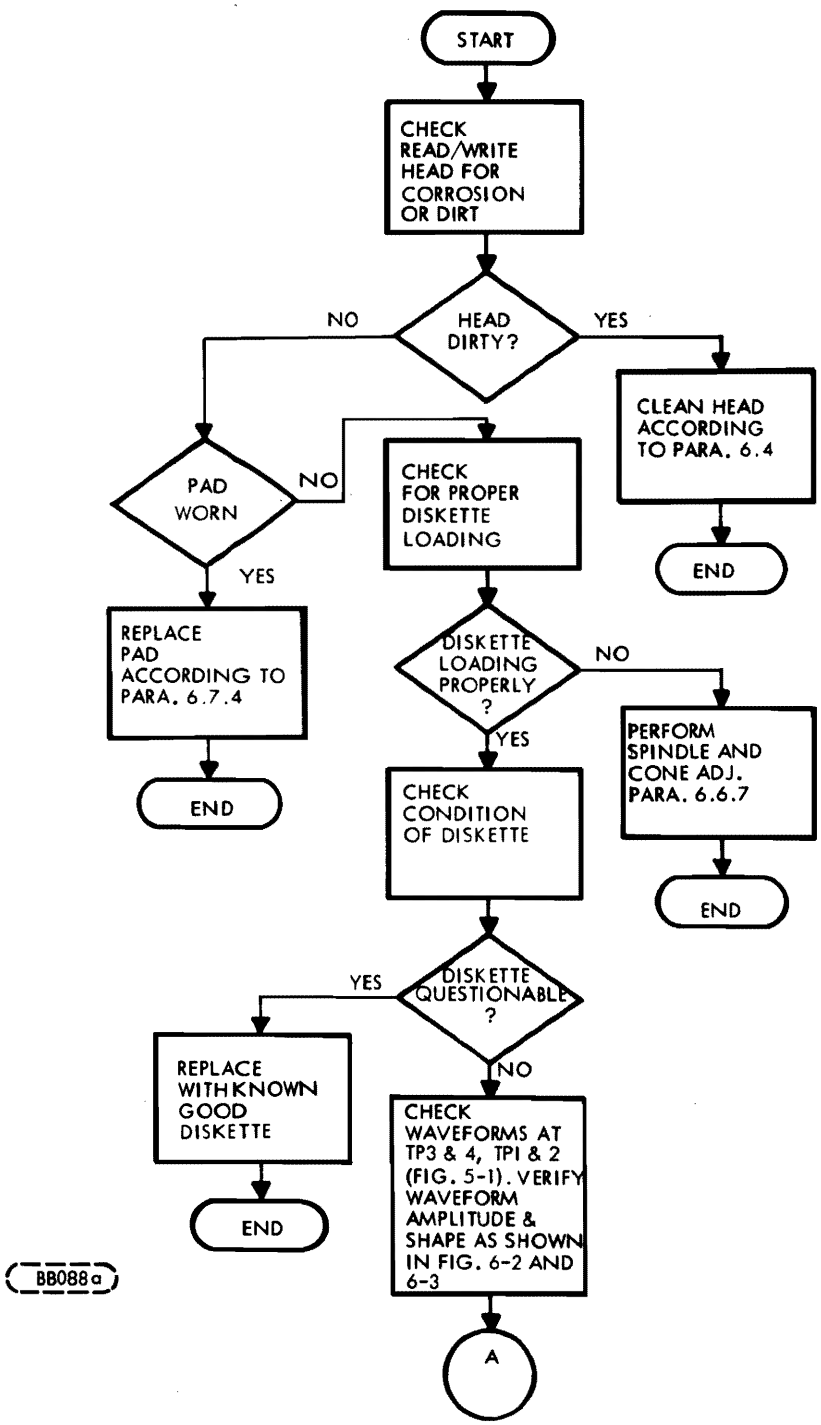

6.5.9 -contd.

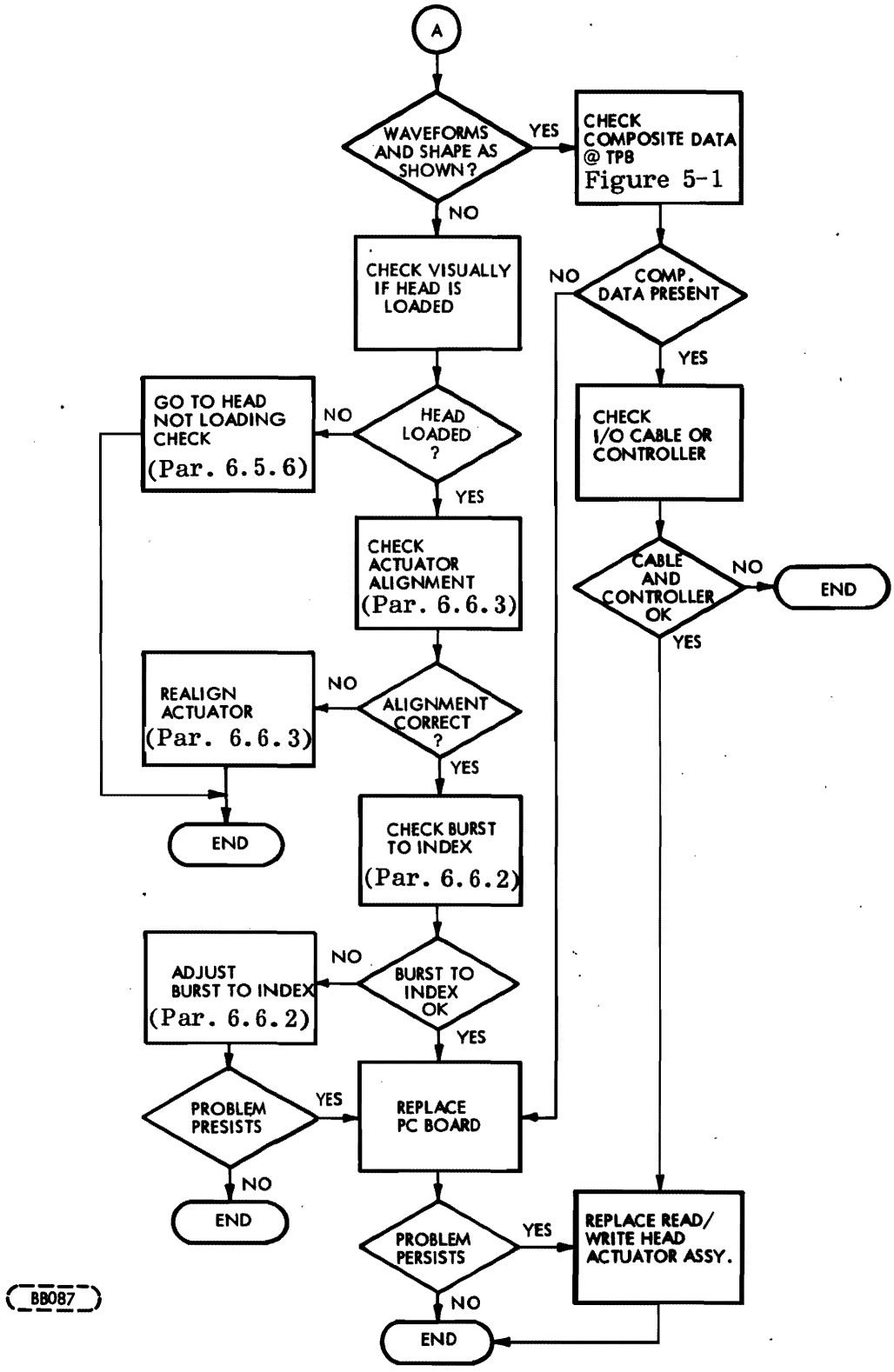
A
WAVEFORMS AND SHAPE AS SHOWN?
YES
CHECK COMPOSITE DATA @ TPB
Figure 5-1
NO
CHECK VISUALLY IF HEAD IS LOADED
NO
COMP. DATA PRESENT
YES
GO TO HEAD NOT LOADING CHECK (Par. 6.5.6)
NO
HEAD LOADED ?
YES
CHECK I/O CABLE OR CONTROLLER
CHECK ACTUATOR ALIGNMENT (Par. 6.6.3)
CABLE AND CONTROLLER OK
NO
END
YES
REALIGN ACTUATOR (Par. 6.6.3)
NO
ALIGNMENT CORRECT ?
YES
END
CHECK BURST TO INDEX (Par. 6.6.2)
ADJUST BURST TO INDEX (Par. 6.6.2)
NO
BURST TO INDEX OK
YES
PROBLEM PRESISTS
YES
REPLACE PC BOARD
NO
END
PROBLEM PERSISTS
YES
REPLACE READ/ WRITE HEAD ACTUATOR ASSY.
NO
END
BB087

6.5.10 WRITE ERRORS

Refer to 6.5.4 prior to starting this trouble shooting procedure.

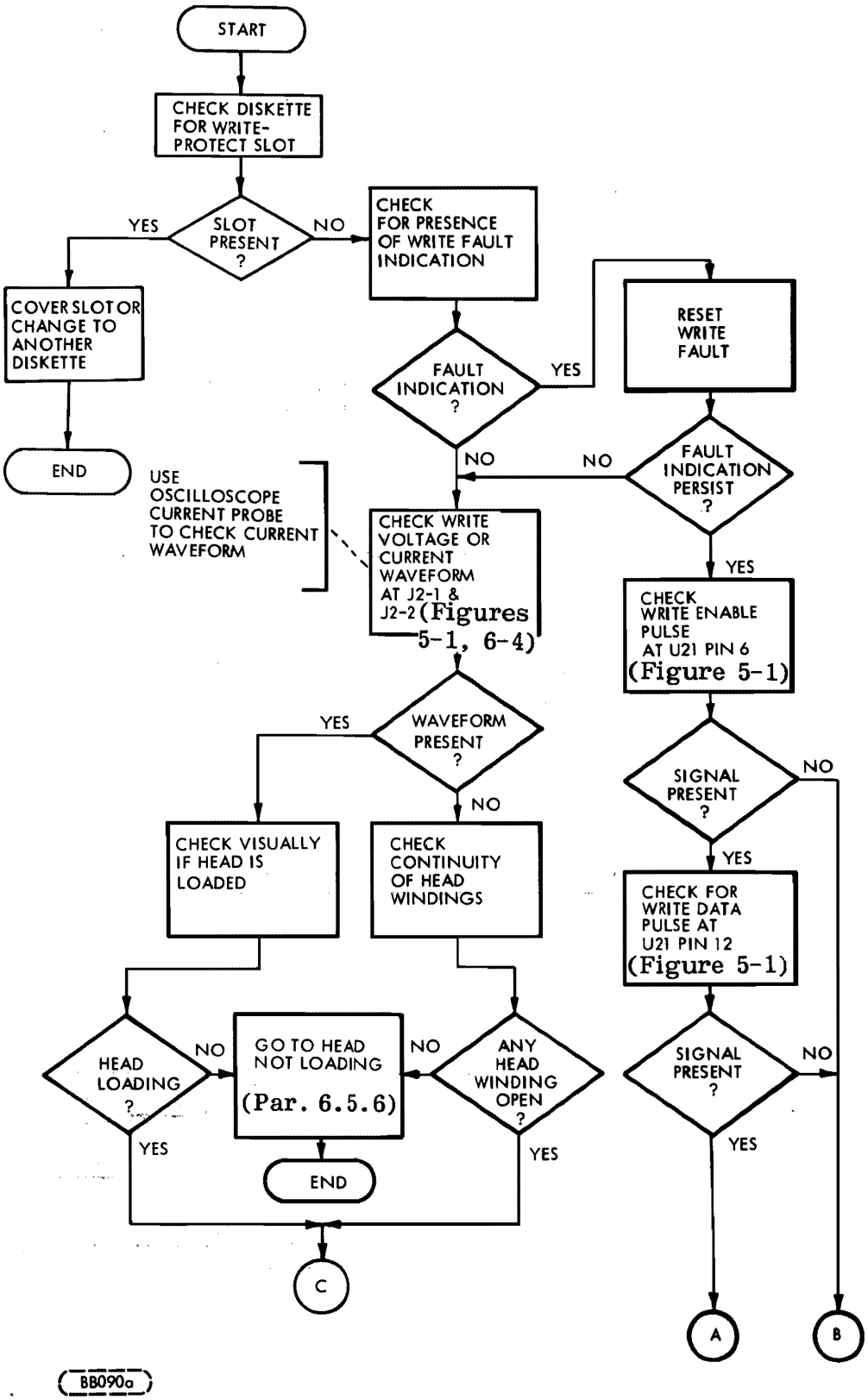

6.5.10 -contd.

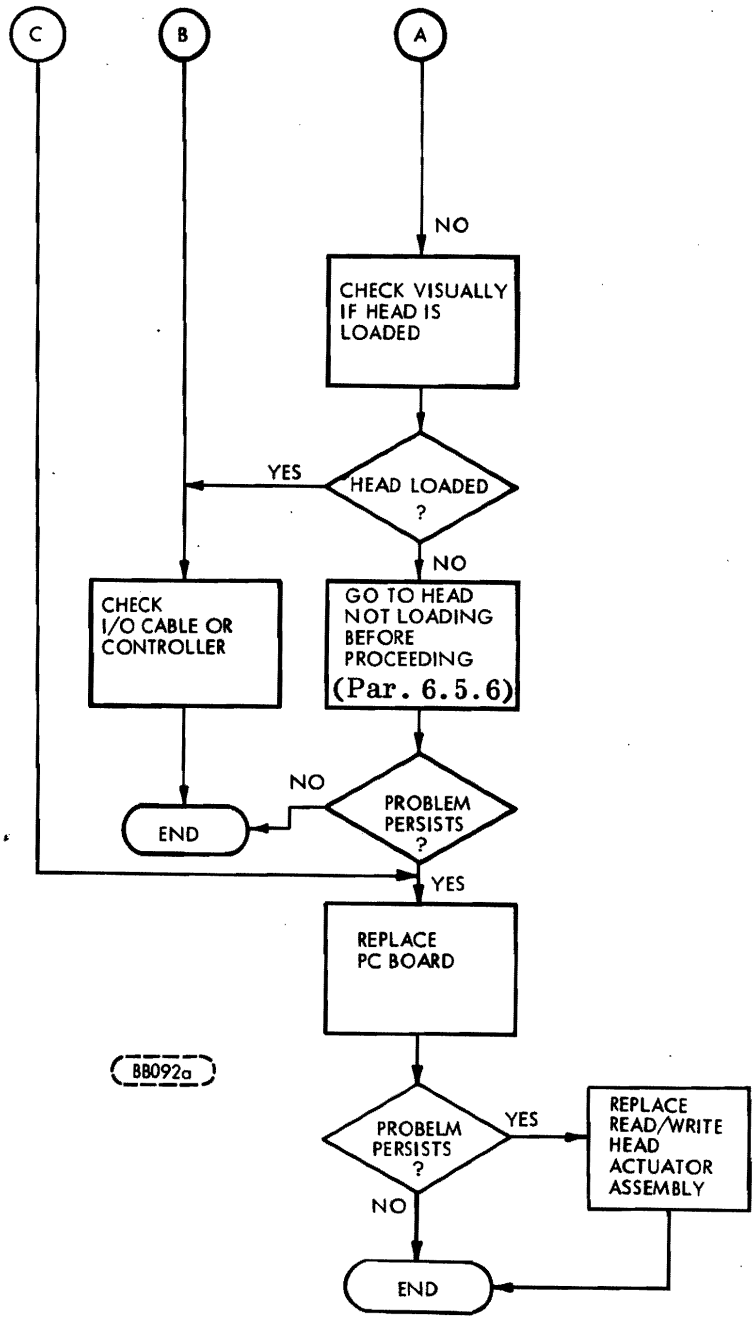
C
B
A
NO
CHECK VISUALLY IF HEAD IS LOADED
YES
HEAD LOADED ?
NO
CHECK I/O CABLE OR CONTROLLER
GO TO HEAD NOT LOADING BEFORE PROCEEDING (Par. 6.5.6)
NO
PROBLEM PERSISTS ?
END
YES
REPLACE PC BOARD
BB092a
PROBELM PERSISTS ?
YES
REPLACE READ/WRITE HEAD ACTUATOR ASSEMBLY
NO
END

6.5.11 WRITE PROTECT INOPERATIVE

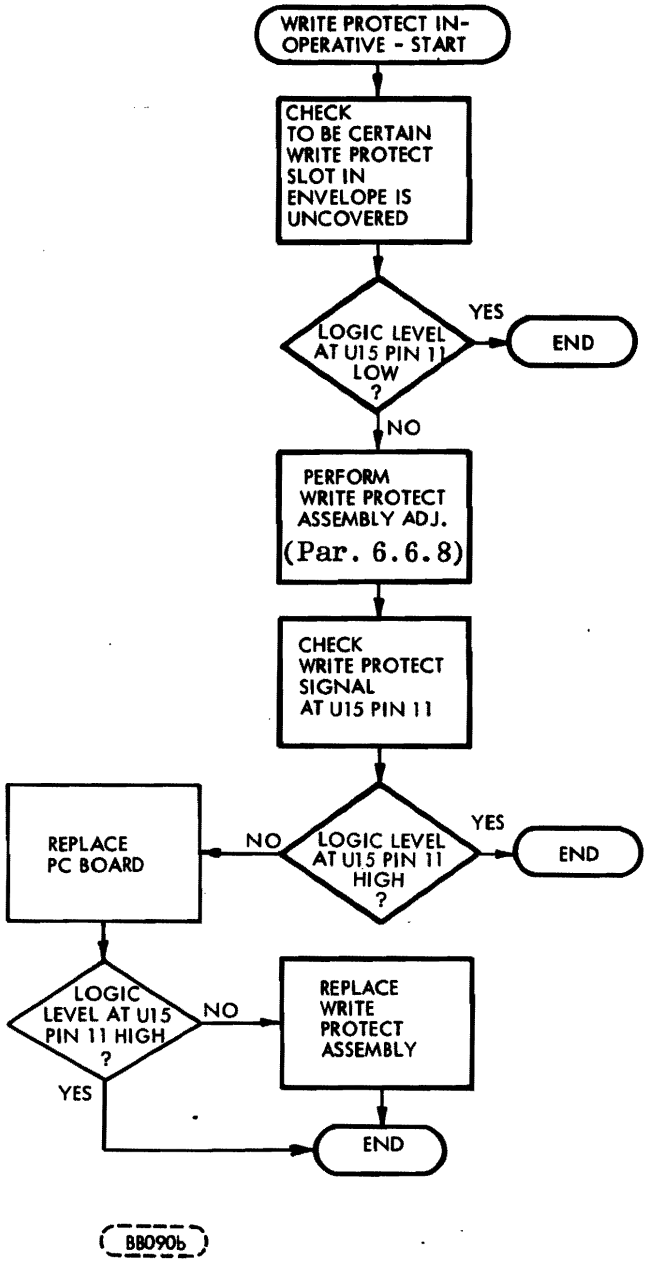

6.6 ADJUSTMENT PROCEDURES

6.6.1 CARRIAGE-STOP ADJUSTMENT

This procedure must be performed whenever actuator alignment or Track 00 adjustment has been performed.

Visually inspect the head-carriage assembly and determine that it comprises either black plastic carriage stops as shown in Figure 6a, or a metal carriage-stop assembly mounted on the carriage guide bar as shown in Figure 6b. To adjust the plastic carriage stops (Figure 6a), follow the procedure given in 6.6.1.1. To adjust the metal carriage-stop assembly (Figure 6b), follow the procedure given in 6.6.1.2.

6.6.1.1 Plastic Carriage-Stop Assembly

a. Place outer stop gauge (CDC P/N 83401400) against carriage as shown in Figure 6-6.
b. Loosen outer carriage stop screw (see Figure 6-6) and move outer stop until tooth contacts stop gauge as shown in Figure 6-6. Tighten stop screw and remove gauge.

c. Step Read/Write head to Track 76.
d. Place inner carriage stop gauge (CDC P/N 83401300) against carriage as shown in Figure 6-6.
e. Loosen inner stop screw (see Figure 6-6) and move inner stop until it contacts stop gauge as shown in Figure 6-6. Tighten stop screw and remove gauge.

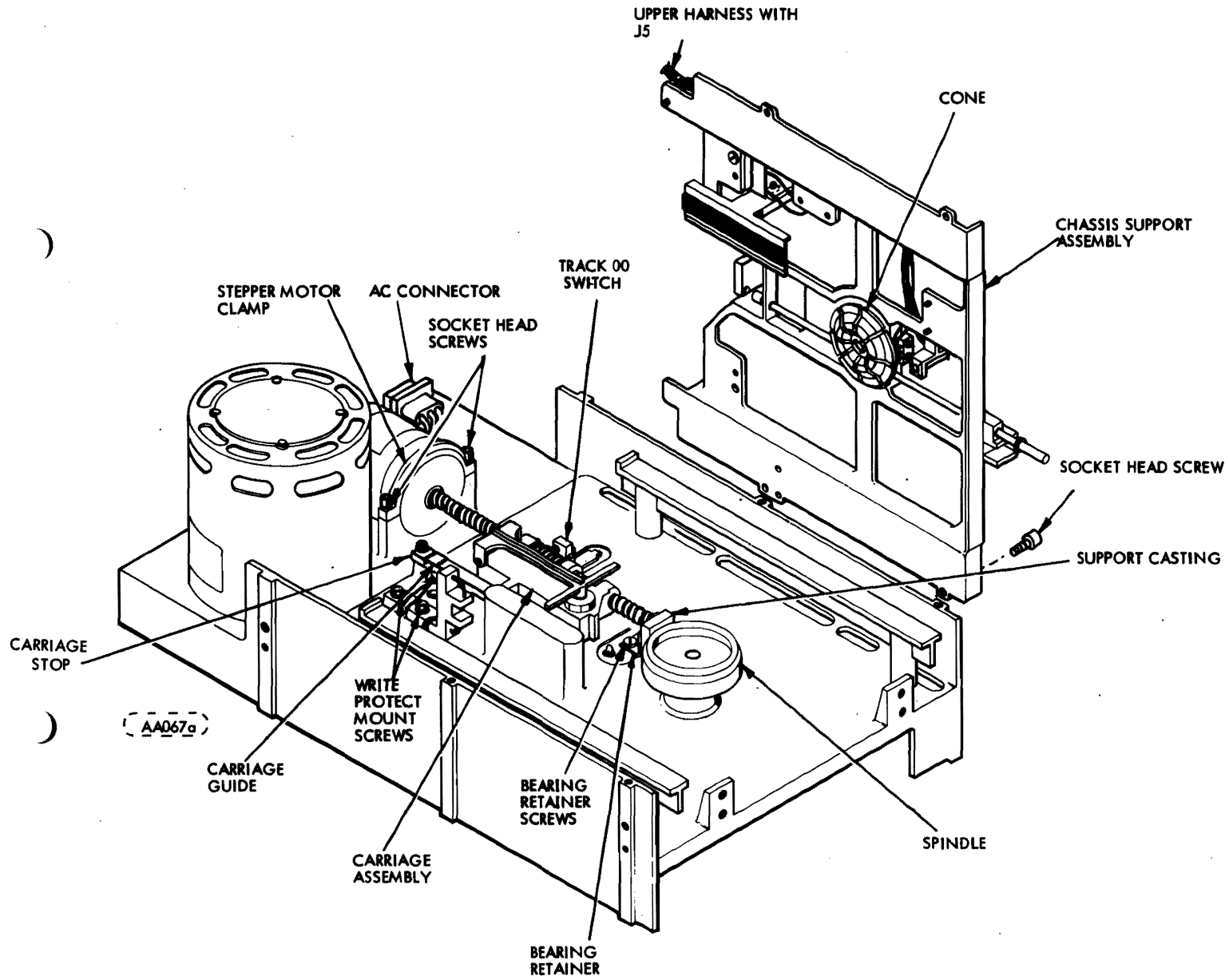

Figure 6-5. Base and Chassis Support Assembly

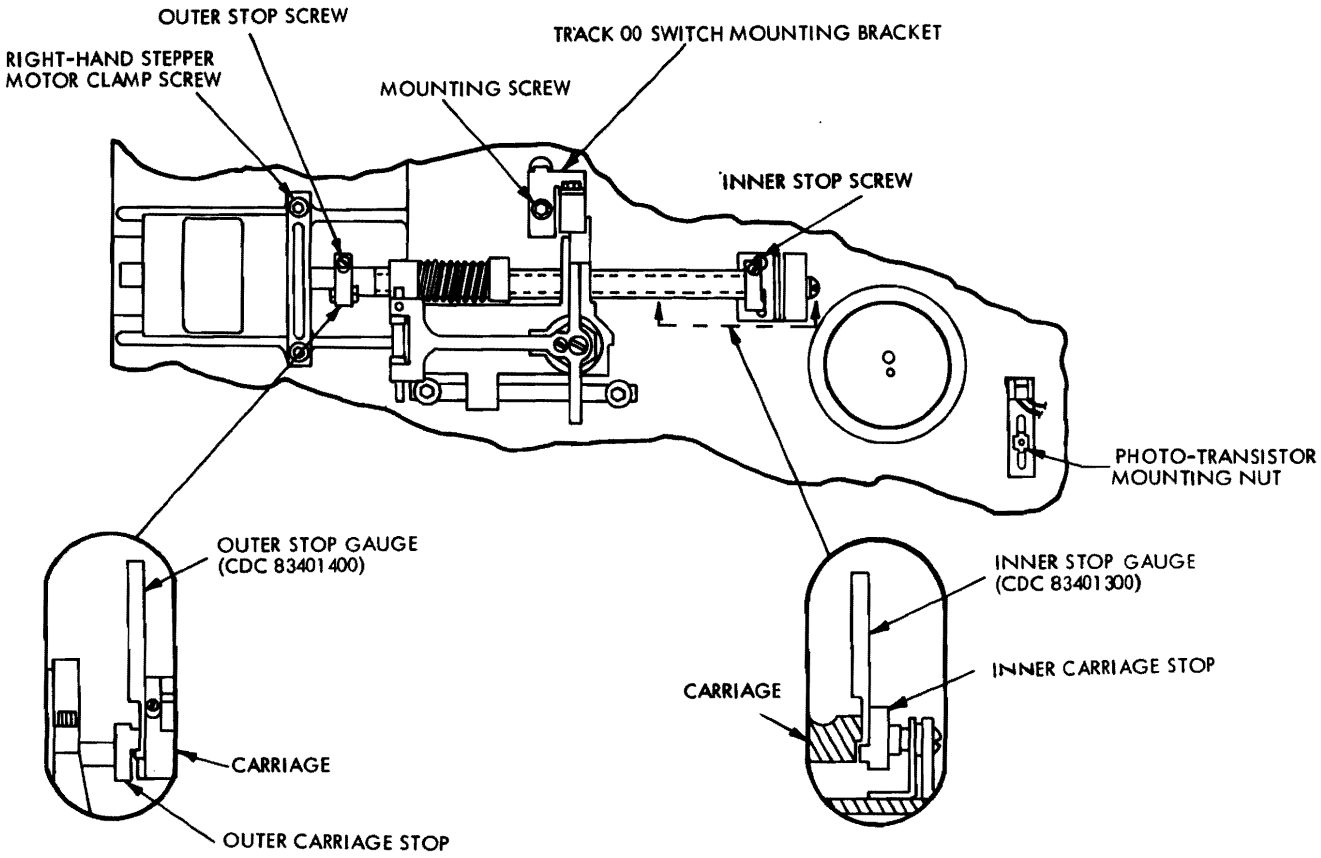

D144b

a. Plastic Carriage-Stop and Stop-Gauge Assemblies

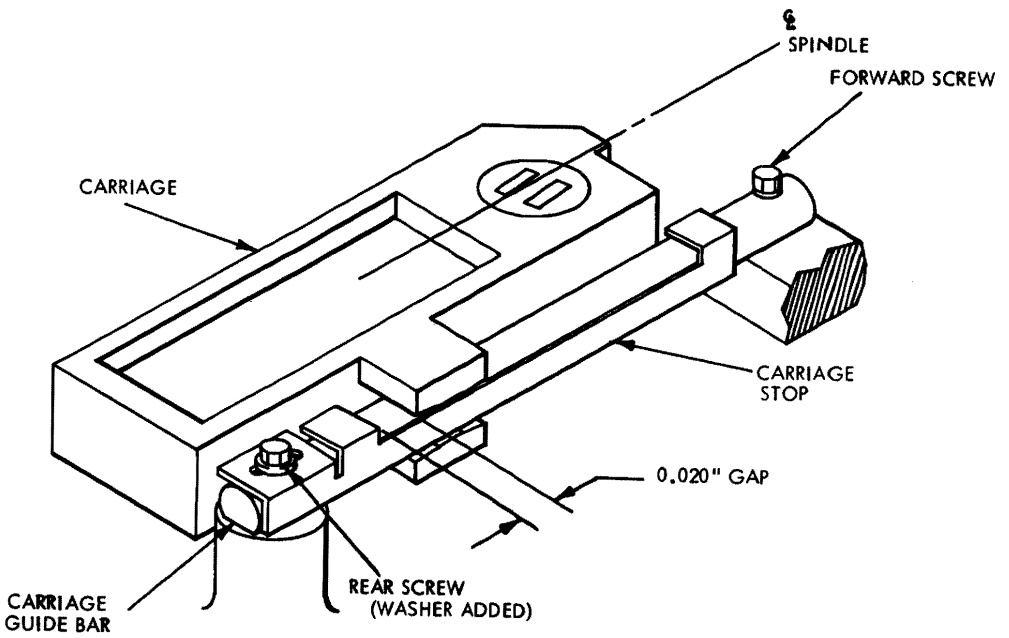

X327a

b. Metal Carriage-Stop Assembly

Figure 6-6. Carriage-Stop Adjustment

6.6.1.2 Metal Carriage-Stop Assembly

This procedure must be performed whenever actuator alignment or Track 00 adjustment has been performed.

a. As shown in Figure 6-6b, using a 0.020-inch shim, adjust outer (rear) stop clearance beyond track 00 and tighten rear screw, torque to 8-10 inch-lbs.

b. Rotate the motor shaft manually to check for interference.

6.6.2 BURST TO INDEX CHECK AND ADJUSTMENT

The Alignment Diskette is used to perform this procedure.

a. Precondition the alignment diskette (421-51W) by allowing it to reach room temperature for one hour.
b. Install the alignment diskette.

CAUTION

The Alignment Diskette is for read only. Extreme caution should be used to assure this diskette is not written on.

c. Seek to Track Zero, then seek to Track One and Read. (No data is recorded on Track One.)

d. Connect Channel 1 of scope to TP3 on the PWA, Channel 2 to Index TP14 of the PWA. Set up the scope as follows:

Chan 1 Volt/Div to: 0.1 volt/div
Chan 2 Volt/Div to: 2 volt/div

d. -contd.

Chan 1 voltage to: AC	Source to: Chan 1
Chan 2 voltage to: AC	Coupling to: Low Freq. (Hi Freq. Reject)
Vert. Mode to: Add	Trig. Mode to: Normal
Slope (Sync) to: Pos.	Time Base to: 50us/div

e. Adjust the time from write splice bit to the leading edge of the index pulse until it measures per Table 6-2. (Refer to Figure 6-7 to adjust the write splice to index time, loosen the Allen head screw holding the phototransistor located on bottom of chassis toward the front of the unit.) Using the adjustment handle protruding through the casting, move the phototransistor until the specification is met. Tighten the Allenscrew while observing the scope signal. Verify that the adjustment did not change. If the adjustment cannot be achieved, it may be necessary to adjust the LED sensor located on the top plate assembly.

f. After the adjustment has been made and specification met, change the scope time base to 0.5ms/div and verify that the index pulse width measures 1.5 ±0.7ms (from 0.8ms to 2.2ms). If the index pulse width is not within specification, adjust the LED sensor located onthe top plate assembly. If the pulse width cannot be adjusted to meet specification, the sensor assembly or PWA must be replaced and steps "a" through "f" repeated.

g. All scope settings are to remain as defined in the original setup in step "d", but it may be necessary to slightly adjust the sync. Seek to track 00 then seek to track 1 and perform a read. While observing the signal on the signal ont he scope, remove and reinsert the diskette three times.

After each insertion, verify that the change in the time from write splice to leading edge of index is less than 50 us. If the change is greater than 50 us, the cone and spindle must be aligned or replaced (see section 6.6.7) and steps "a" through "g" repeated.

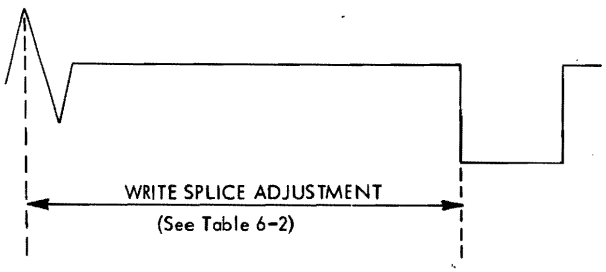

AA036c

Figure 6-7. Write Splice Bit to Index Timing

Table 6-2. Write Splice Adjustment

CONFIG. REF. NO.	WRITE SPLICE ADJ. (µS)
601	450 ±50
602	150 ±60
603	450 ±100

6.6.3 ACTUATOR ALIGNMENT (Diskette)

The Alignment Diskette is used to perform this procedure. Install jumper from U26 Pin 7 to ground.

a. Alignment Diskette 421-51W shall be preconditioned by allowing it to reach room temperature for one hour.

b. Install the alignment diskette.

CAUTION

The alignment diskette is for read only. Extreme caution should be used to assure this diskette is not written on.

c. Step to track 38 (00100110) and perform a read. (No data is recorded on track 38. The tester or system requirements should be noted; refer to tester or system instructions for operation.)

d. Connect Channel 1 of scope to TP3 on the PWA and Channel 2 to TP4 on the PWA.

e. Connect the external sync probe to index at TP14 on PWA.

f. Set up the scope as follows:

Channel 1: volts/div to: 0.1 volts/div
Channel 2: volts/div to: 0.1 volts/div (inverted)
Channel 1: input to: AC
Channel 2: inputs to: AC

Vertical Mode to: Add
Slope (Sync) to: Positive
Trigger Source to: External
Trigger Coupling to: Low Frequency (High Frequency Reject)
Trigger Mode to: Normal
Time Base to: 20 msec/div

NOTE

Scope trace after trigger level is adjusted for repetitive trace should display an envelope of data "Cateyes" consisting of two lobes (refer to Figure 6-8 A). If no such pattern can be displayed, manually turn the stepper motor shaft extending from the rear of the stepper motor one-quarter turn either way to locate pattern. Then proceed to step "h".

g. Change the volts/div of Channel 1 and Channel 2 to 0.02 volts/div. Move the trace on the scope (Position Knob) up until the bottom of the two lobes are setting approximately on the base line (refer to Figure 6-8 B). For an acceptably aligned unit, the voltage ratio of the smaller lobe to the larger lobe should exceed 80%.

h. If not in alignment, loosen the stepper motor clamp mounting screws to where a gap exists between the clamp and casting (see Figure 6-9) and slowly rotate the stepper motor to adjust the amplitude until the amplitude of both lobes is the same, that is, the difference between the bottoms of both lobes is less than 5mV.

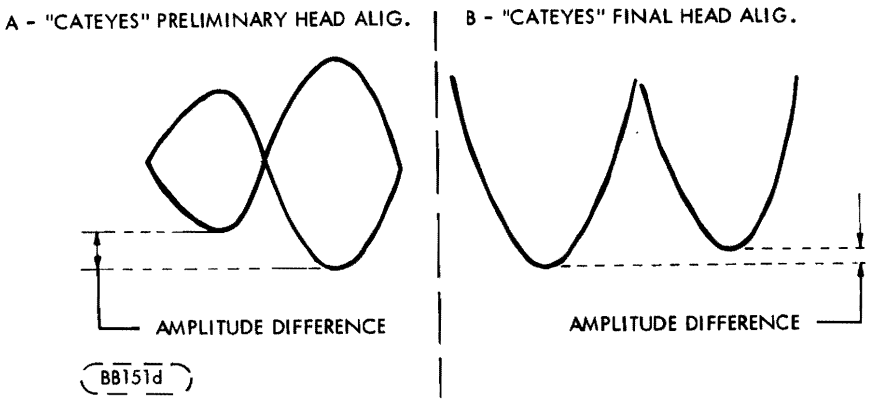

Figure 6-8. Head Alignment Amplitude

i. Tighten the stepper motor clamp. Return to track 00, then seek back to track 38. Verify that the 5mv specification is still met. If the specification is not met, readjust the stepper motor, return to zero and seek back to track 38. Repeat the adjustment until the 5mv specification is met.

j. Remove alignment diskette.

k. Perform Track 00 Switch Adjustment Paragraph 6.6.9.

l. Perform Stop Gauge Adjustment per Paragraph 6.6.1.

m. Recheck all adjustments made in this procedure and repeat all steps having out-of-tolerance indications.

6.6.4 PUSH ROD TRAVEL ADJUSTMENT

This procedure must be performed whenever chassis support (Figure 6-9) is removed and replaced.

a. With front panel door closed, verify that a gap exists between the retaining ring and the disk load bushing of approximately 0.030 inch (0.762mm) (refer to Fig. 6-9). Perform steps b and c if out of adjustment.

b. Back-off the Door Interlock Switch Adjustment set screw.

c. Adjust disk load arm set screw (Figure 6-9) until gap is approximately 0.030 in. (0.762mm), with door closed.

d. Proceed to Door Interlock Switch Adjustment (paragraph 6.6.5)

6.6.5 DOOR INTERLOCK SWITCH ADJUSTMENT

This procedure must be performed whenever the Push Rod Travel Adjustment procedure is performed.

a. Verify that interlock switch closes (when closing the door) prior to the door latching. Perform step (b) if switch and door are out of sync.

b. With door closed, adjust set-screw at end of disk load arm (Figure 6-9) while holding door closed against metal stop. Adjust set-screw until micro-switch is almost adjusted flush to top of switch case. This ensures that as the nylon tips on the push-rod wear down, the switch will still close.

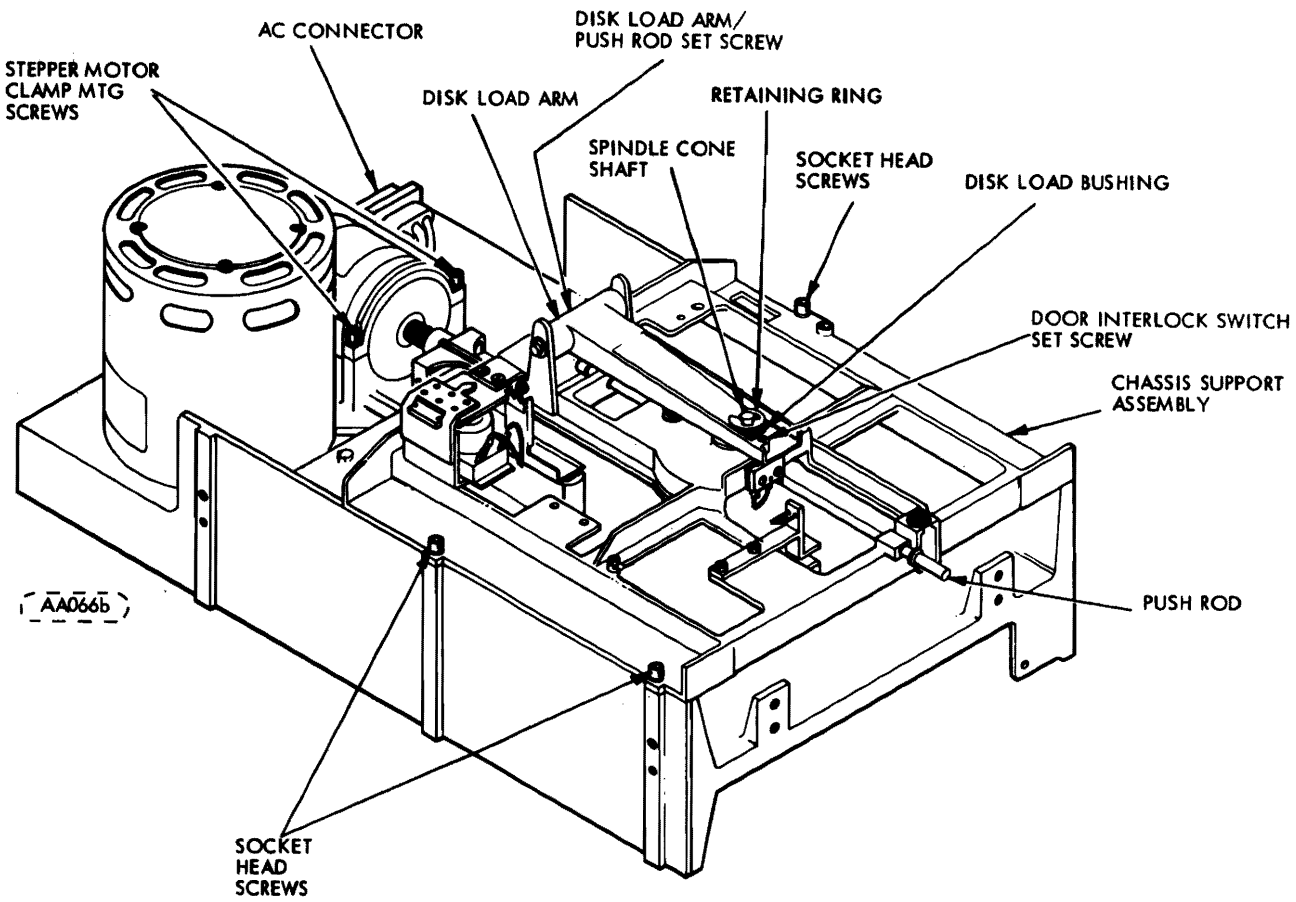

Figure 6-9. Chassis Base Assembly

6.6.6 DISK LOAD BAIL ADJUSTMENT

This procedure must be performed whenever the solenoid or bail are removed or the screw holding the bail becomes loose.

a. Place a 0.072" (1.83mm) feeler gauge on boss of bottom support casting underneath bail.

NOTE

Caution must be taken to ensure gauge is not under foam padding.

b. Energize solenoid.
c. Loosen mounting screw on bail (Figure 6-10).
d. Adjust Bail so it is flat against the top of the gauge.

NOTE

On early units, the bail did not have a convex dimple and guide slot. When adjusting these units, the spacing must be checked at both ends of the bail to ensure it is parallel to the boss.

e. Tighten mounting screw.

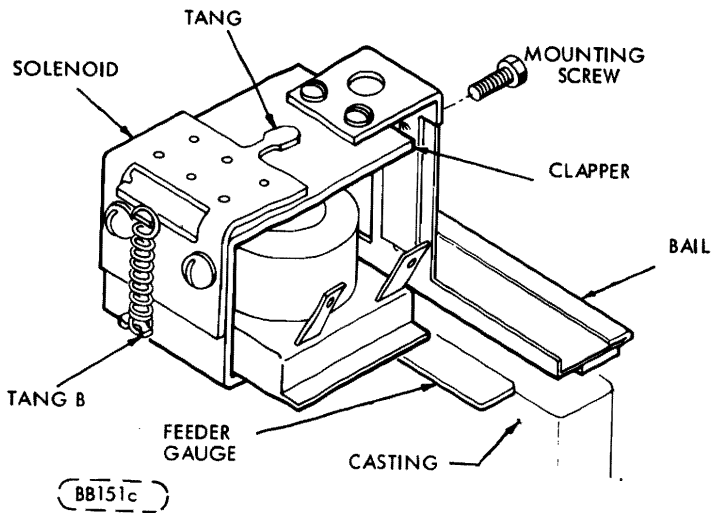

Figure 6-10. Disk Load Solenoid

6.6.7 SPINDLE AND CONE ADJUSTMENT

This procedure must be performed whenever the spindle and cone are out of alignment or whenever the actuator assembly is removed or replaced.

a. Loosen chassis support assembly (Figure 6-9).
b. Position chassis assembly by pushing down on the spindle cone shaft so cone seats in the spindle (Figure 6-11).
c. Slowly close door without spindle turning. Spindle top surface and cone spindle contact surface must meet at the same time on the full circumference of the spindle (see Figure 6-11).
d. Complete door closing slowly. Visually verify that all segments on the cone that can be seen are fully seated in the spindle. Slowly rotate spindle and verify that all cone segments are seated and that the segments do not seat as the spindle is rotated as evidenced by a "clicking" sound or observing the segments seating.
e. Repeat fully opening and closing door four times. Verify that after each closing all cone segments are fully closed. Verify that the load arm does not bind when door is opened and closed.
f. Secure socket head screws (Figure 6-9) and again recheck steps "c" through "e".

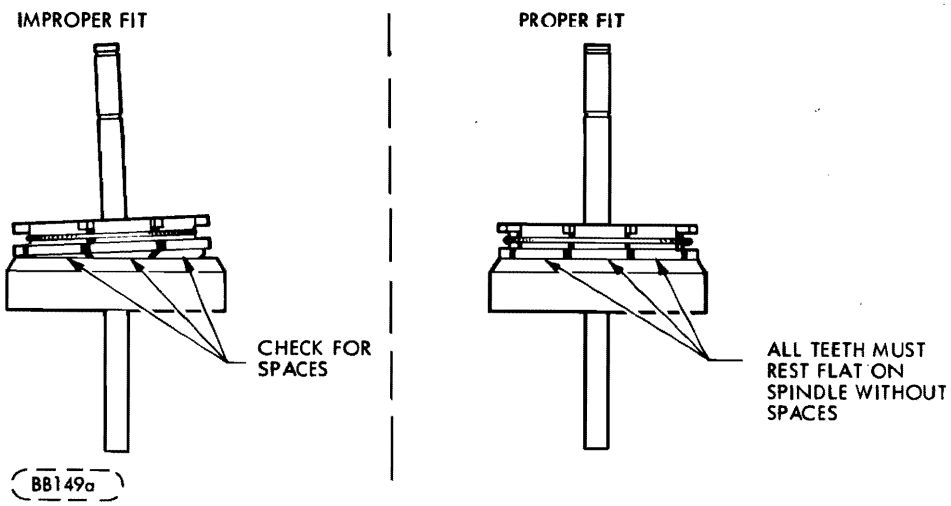

Figure 6-11. Spindle and Cone

6.6.8 WRITE PROTECT ASSEMBLY ADJUSTMENT

This adjustment will be required whenever the unit is dis-assembled, or a different style diskette is utilized in the unit.

a. With a Write Protected diskette installed in the unit (Write Protect slot uncovered), monitor U15 pin 11 for the WRITE PROTECT signal. A continuous logically high signal will be present whenever the Write Protect assembly is properly adjusted. A logically low signal will appear if not properly adjusted.

b. To adjust, loosen the two hex-head screws holding the sensor mount in place. With the front panel door open, push down on the disk load arm (Figure 6-9) to insure that the disk is in the loaded position (Figure 6-10). At the same time, grasp the end of the envelope and move from side-to-side, and forward and backward while observing the WRITE PROTECT signal at U15 pin 11. Adjust the mount until the WRITE PROTECT signal is present for any position of the envelope.

c. Tighten the mount screws, and re-check to verify signal under all conditions of envelope position.

6.6.9 TRACK '00' SWITCH ADJUSTMENT

Perform either the mechanical or electrical procedure given below whenever the Track 00 switch has been replaced, or the device fails to give current Track 00 indication, or if head has been realigned.

- Mechanical Adjustment

a. Step read/write head out to track 01.
b. Place a 0.010 (0.254 mm) feeler gauge between carriage assembly and Track 00 switch, as shown in Figure 6-6 .
c. Verify that Track 00 switch closes by observing Track 00 signal at terminal J3-2 on Component Board Assembly (see Figure 6-1).
d. If Track 00 signal does not occur, loosen Track 00 switch bracket mount screw and rotate switch bracket forward until Track 00 signal occurs.

- Electrical Adjustment *

e. Step Read/Write head out to Track 00.
f. Do a continuous two track seek (back and forth between Tracks 00 and 02).
g. Verify that the duty cycle of the signal observed at terminal J3-2 is 40% to 60%.
h. If the signal is not 40% to 60% duty cycle, loosen Track 00 switch bracket mount screw and rotate switch bracket until signal is set to 40% to 60% duty cycle.

---

* For all equipment nos. except BR803E, F, G, H, J, K and BR8A3C, D, E and F.

6.7 REMOVAL AND REPLACEMENT PROCEDURES

The following procedures give the proper sequence for removal and replacement of major assemblies. To avoid damage to parts, the procedure must be performed in sequence.

6.7.1 PRINTED CIRCUIT BOARD (PWA)

a. Disconnect I/O Cable from J1 (refer to Figure 6-1).
b. Disconnect harnesses from connectors on printed circuit board.
c. Remove two screws from printed circuit board adjacent to connector J1 (Figure 6-12).
d. Remove PWA by detatching it from the four push-in clips shown in Figure 6-12.
e. To replace printed circuit board push clips through printed circuit board.
f. Replace two screws adjacent to connector J1.
g. Reconnect harness and I/O cable.
h. Set dipswitch S1/S2 if applicable.
i. Perform Burst to Index Check and adjust if necessary (paragraph 6.6.2).

6.7.2 ACTUATOR ASSEMBLY

a. Open front panel door.
b. Disconnect harness from J2 and J4 on printed circuit board (see Figure 6-1).
c. Remove four (4) socket head screws securing chassis support (Figure 6-9).
d. Slide chassis support back far enough to clear push rod (Figure 6-16) of front panel and lift support clear of chassis.
e. Remove two (2) screws securing bearing retainer (Figure 6-5).
f. Remove stepper motor clamp by removing two socket head screws (Figure 6-5). Remove Cable Clamp.
g. Carefully slide actuator assembly (stepper motor, actuator, and bearings at the end of stepper shaft) straight out toward the rear of the FDD until unit is clear of the casting.
h. To replace actuator assembly, slip bearings into support casting, Figure 6-5 . (Assure carriage assembly is fitted on carriage guide.)

CAUTION

The wavy spring washer between the two bearings can prevent the bearings from being inserted into the support casting if the washer has slipped off-center and protrudes beyond the circumference of the bearings. If this happens, loosen the retainer screw on the end of the shaft so the bearings can separate and the washer can be repositioned. The screw must be retightened after the bearings are successfully inserted.

j. Replace stepper motor clamp and two socket head screws (Figure 6-5).
k. Secure the bearing retainer by replacing the two bearing retainer screws (Figure 6-5).

CAUTION

The bearing retainer clamp should have an included angle of approximately 92° between the base and side. When base is securely fastened to chassis, this will assure proper tension on bearings. If a gap exists between bearing and retainer or if bearing is being bound up by retainer, this angle must be checked.

l. Perform Actuator Alignment Procedure, (paragraph 6.6.3).
m. Perform Spindle and Cone Adjustment, (paragraph 6.6.7).
n. Perform Push-Rod Travel Adjustment, (paragraph 6.6.4).

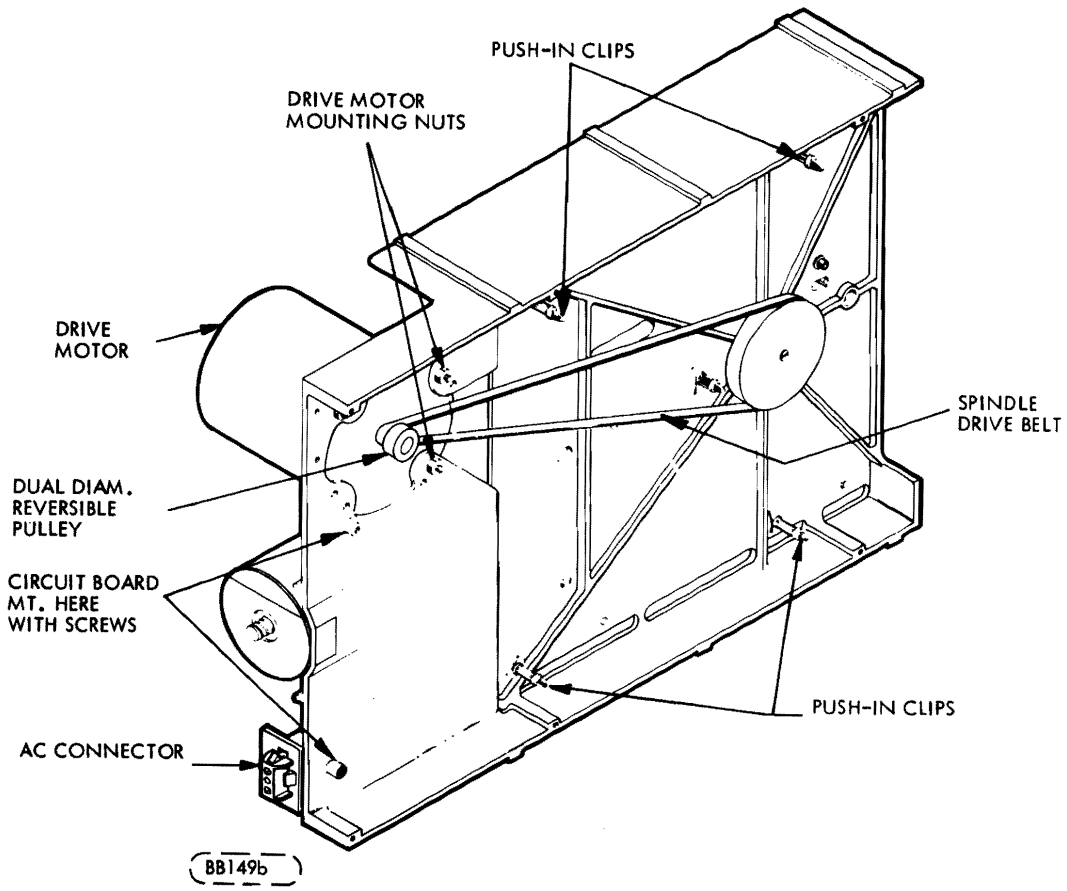

Figure 6-12. Base Casting Assembly

6.7.3 DRIVE MOTOR ASSEMBLY

a. Perform removal procedure for printed circuit board (paragraph 6.7.1).
b. Remove screws securing drive motor cable clamps.
c. Remove AC connector from bracket. (Figure 6-12)
d. Remove spindle drive belt (Figure 6-12)
e. Remove three (3) nuts securing drive motor (Figure 6-12)
f. Remove drive motor assembly (drive motor, capacitor, and AC connector).
g. To replace drive motor assembly perform, in reverse order, steps f through a substituting word replace for word remove.

6.7.4 HEAD LOAD PAD REPLACEMENT

CAUTION

Do not raise the head-load arm to the 90-degree position and then release it; damage to the load-arm spring and/or to the head (core and ceramics) could result.

a. Remove power from the unit.
b. Move the carriage assembly to its rear most position (toward the stepper motor) by turning the aft part of the stepper motor shaft (Figure 6-13.) This will provide clearance for lifting the head load arm.
c. Lift the head load arm until the head load pad is visible (see Figure 6-13).
d. If head load arm is a 77603108 (Figure 6-13) proceed to step h, if not go to step e.
e. Remove the used pad with a sharp tool, if necessary, and discard. Be sure to remove all of the old pad and adhesive. Alcohol may be used to remove the old adhesive.
f. Remove the protective backing from the new head load pad and position pad in center of recess of head load arm. Press pad firmly to insure adhesion with a clean tongue depressor or with thumb using a lint free cloth to protect the pad from grease or dirt.
g. Go to step n.
h. Loosen clamping screw holding rim of head load pad.
i. Insert screw driver and rotate head load pad so flattened side will clear clamping screw.
j. Remove Pad Holder Assembly.
k. Insert new Assembly, with flat side toward clamping screw.
l. Assuring that head load pad is fully seated, rotate pad 180°.
m. Tighten clamping screw to hold pad in place.
n. Lower arm gently onto head.

6.7.5 SOLENOID REPLACEMENT AND TANG ADJUSTMENT

This procedure must be performed whenever the solenoid is out of alignment or whenever the solenoid assembly is replaced.

a. Place the tapered end of a flat head screw driver between Tang A and solenoid clapper. (See Figure 6-10).
b. Gently bend the tang upward with the screwdriver.
c. Using a 0.060 inch (1.52mm) wire feeler gauge, insert the feeler gauge in the gap between the underside of the clapper and the coil core. (See Figure 6-14)

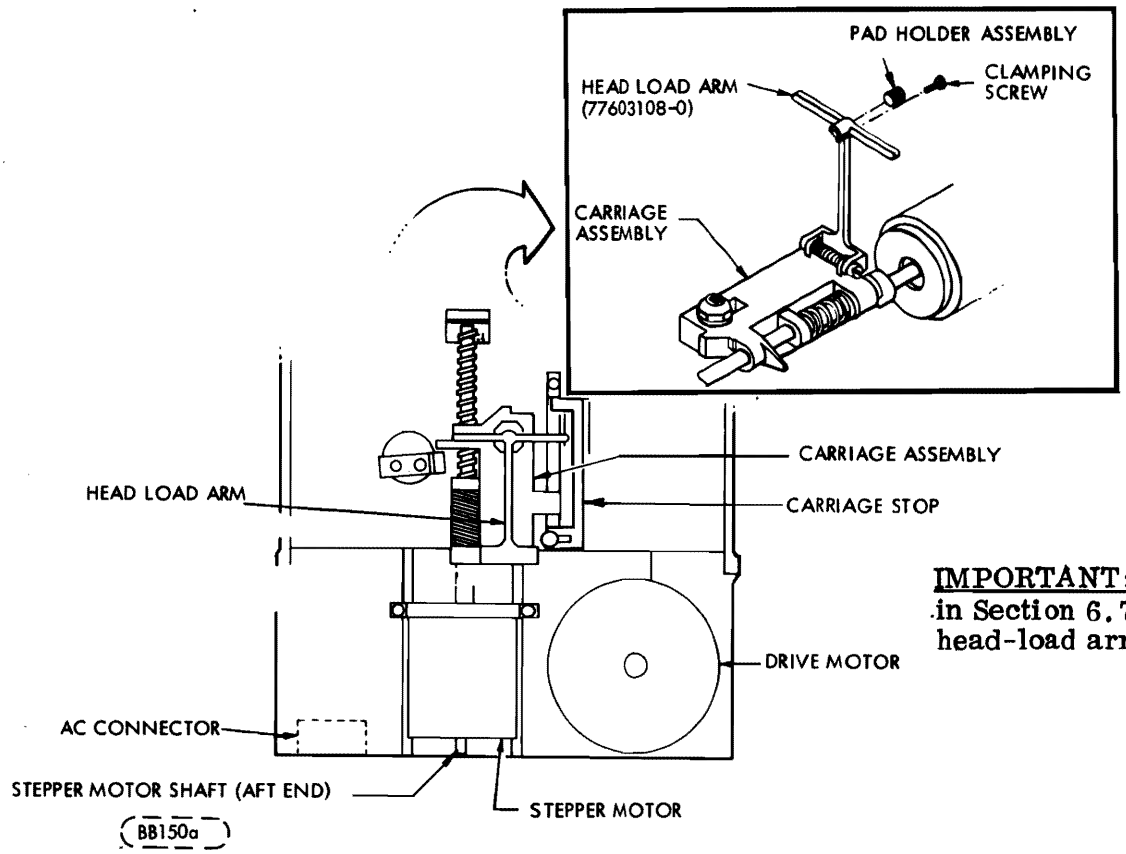

NOTE

IMPORTANT: Refer to **CAUTION** in Section 6.7.4 before handling head-load arm.

Figure 6-13. Head Load Pad Replacement Illustration

d. If unable to insert 0.060 inch (1.52mm) wire feeler gauge, continue to gently bend tang upward until feeler gauge can be inserted.
e. Next, attempt to insert a 0.062 in (1.58mm) wire feeler gauge between the underside of the clapper and the coil.
f. If this gauge can be inserted, bend tang down until 0.062 inch (1.58mm) feeler gauge will not insert in gap between clapper and coil core.
g. Insert a 0.058 in (1.47mm) wire feeler gauge in gap between underside of clapper and coil core.
h. If 0.058 in (1.47mm) feeler gauge will not fit, bend tang up slightly.
i. Continue checking with the 0.062 inch (1.58mm) wire gauge feeler and 0.058 inch (1.47mm) wire gauge until the following condition is achieved:
   1. 0.062 inch (1.58mm) feeler gauge will not pass between tang and clapper;
   2. 0.058 inch (1.47mm) feeler gauge passes freely between tang and clapper.
j. Check spring adjustment by gently pressing down on clapper until the 0.060 inch (1.52mm) ±0.002 in (0.051mm) gap is closed.
k. Allow clapper to rise slowly and release.
l. Clapper should be in contact with the tang.
m. If not, bend the lower tang B, Figure 6-10; downward gently.
n. Recheck that the clapper rise and perform step m until clapper and tang make contact.
o. Check bail adjustment per paragraph 6.6.6.

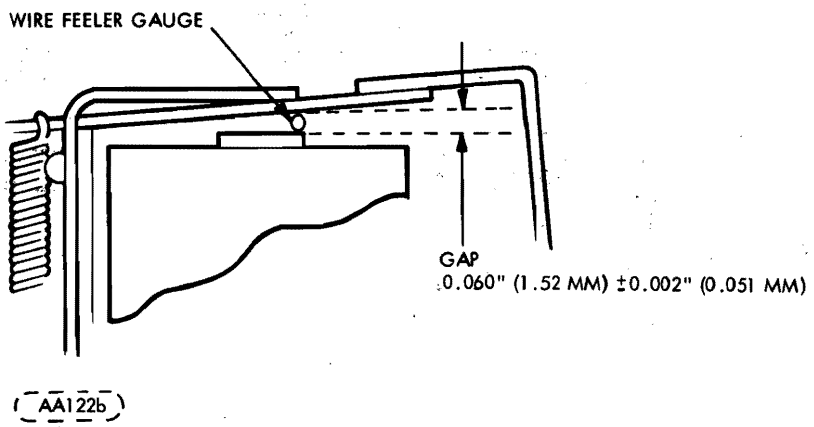

Figure 6-14. Solenoid Adjustment

6.7.6 CARRIAGE AND/OR STEPPER MOTOR REPLACEMENT

The carriage and stepper motor are to be replaced as one assembly, being factory assembled and tested only. Refer to Section 6.7.2.

6.8 FREQUENCY CONVERSION

6.8.1 OPERATING FREQUENCIES CONVERSION PROCEDURE

This procedure is to be used to convert the FDD unit from 60 Hz operation to 50 Hz operation or vice versa.. This is accomplished by reversing the dual diameter reversible pulley on the spindle motor shaft (Figure 6-12) using the following steps:

a. Remove AC power.
b. Remove Printed Circuit Board Assembly per paragraph 6.7.1.
c. Remove the belt from the spindle motor pulley. (Accessible from the under side of unit).
d. Loosen set-screw and remove pulley.
e. Reverse pulley and replace on motor shaft.
f. Position pulley allowing 0.079" (2.01 mm) ± 0.010" (0.254 mm) between shoulder of motor mounting screws and pulley (Figure 6-15).
g. Tighten down set-screw.
h. Replace belt and Printed Circuit Board.

CAUTION

It is IMPORTANT that the new operating frequency be marked on the unit's rating nameplate.

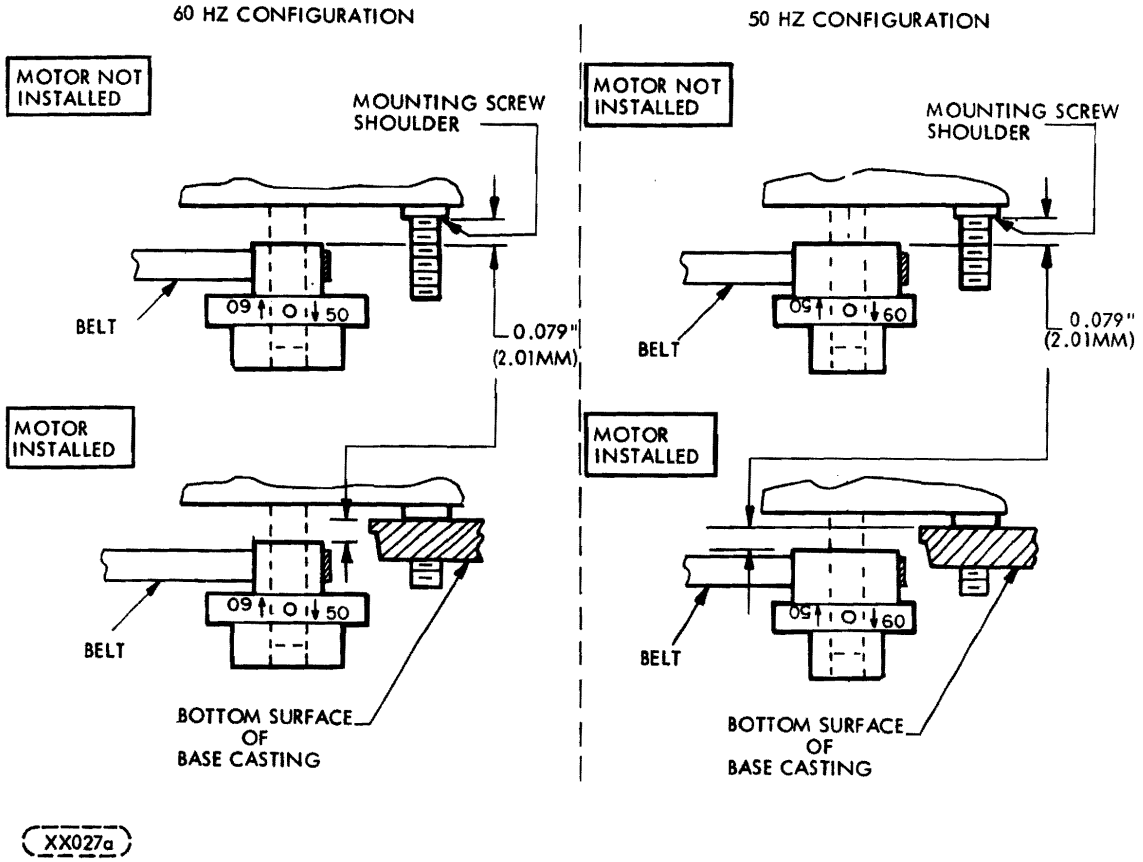

Figure 6-15. Drive Pulley Reversal

7.1 INTRODUCTION

This section contains detailed information on the logic circuits used in the FDD. The logic consists of two types of circuits: discrete component and integrated circuits (IC). Integrated circuits are contained within a single chip and discrete component circuits contain individually identifiable resistors, capacitors, transistors, etc.

7.2 PHYSICAL DESCRIPTION (Logic)

All components are mounted on one side of the printed circuit board. The board is 8 x 11 inches (203.2mm x 279.4mm) and contain both IC and discrete component circuits.

7.3 USE OF RELATIVE LEVEL INDICATORS

The relative level indicator is a small triangle located on the input or output to a logic block. The presence or absence of this indicator indicates the conditions that are necessary to satisfy the function of the logic block. The presence of the triangle indicates a 0 logic level on that line is needed to satisfy the function. The absence of the triangle indicates a logical 1 is needed to satisfy the function.

The relative level indicator depicts the occurrence of inversion. Figure 7-1 shows some representative examples of the relative level indicator being used in this manner.

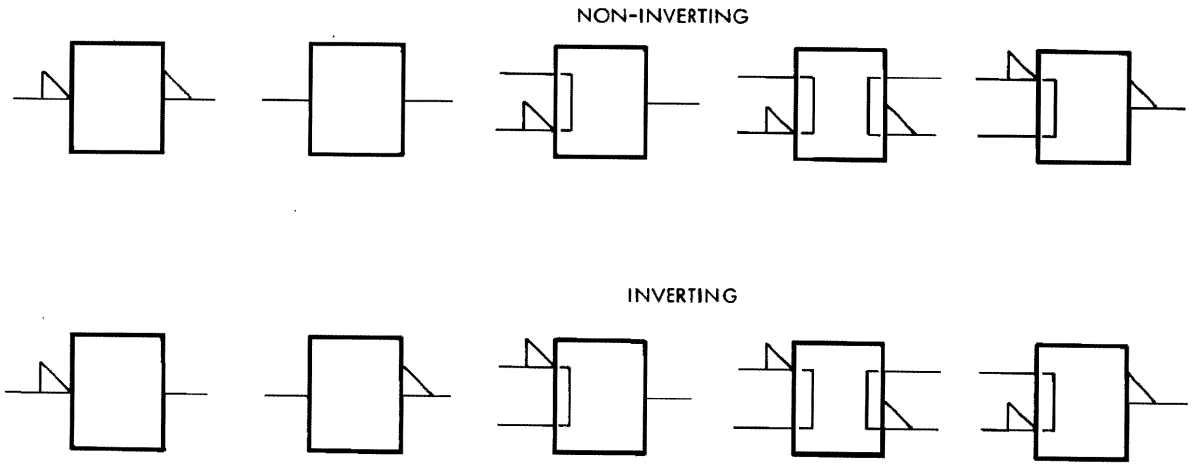

Figure 7-1. Inversion Conventions

7.4 INTEGRATED CIRCUITS

Figure 7-2 shows an example of a schematic block and the information that it contains. The first line gives the function symbol which identifies the logic function that the block performs. Refer to Figure 7-3 for a summary of function symbols. The second line gives the CDC element number. The third line on the schematic block gives the circuit reference designation.

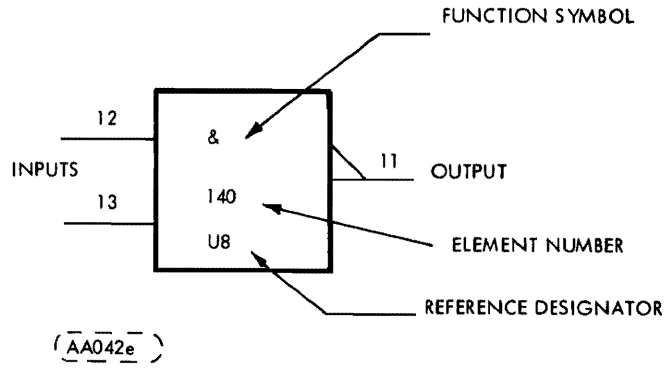

Figure 7-2. Integrated Circuit

FUNCTION SYMBOLS	
&	AND GATE OR INVERTER
1	OR GATE OR INVERTER
=1	EXCLUSIVE OR
1 ⎍	ONE SHOT
Σ	SUMMING CIRCUIT. NUMBER FOLLOWING (EXAMPLE 100) INDICATES GAIN OF 100
X/Y	LEVEL CONVERSION - TRANSMISSION LINE TO LOGIC LEVEL, SWITCH STATE TO LOGIC LEVEL OR LOGIC LEVEL TO POWER OUTPUT
	SCHMITT TRIGGER (LOWER TRIP POINT ADJUSTABLE)
GENERAL SYMBOLS	
	INDICATES NON STANDARD LOGIC LEVEL
	INDICATES ANALOG SIGNAL
	TEST POINTS
	INHIBITING INPUT

BB151b

Figure 7-3. Schematic Symbols

PARTS DATA

8.1 INTRODUCTION

This section contains an illustrated parts breakdown that describes and illustrates all variations of the Flexible Disk Drive (FDD). In general, parts are in disassembly sequence but do not necessarily indicate the maximum recommended disassembly of parts in the field.

8.2 ILLUSTRATIONS

Item numbers within a circle (1) indicate an assembly (group of parts). Item numbers without a circle, 1, indicate a single part; a group of parts that are pinned or press fitted together; or a group of parts which is normally replaced as an assembly.

8.3 PARTS LISTS

In addition to the accompaning parts list on each illustration, two additional Parts Lists are available; the Top-Down Assembly/Component Parts List and the Cross Reference Index. Instruction for the use of all Parts lists in paragraph 8.6.

8.4 TOP MECHANICAL AND ASSEMBLY LOCATION

In conjunction with Table 8-1, Figure 8-1 serves two purposes;

1. When used with Table 8-1, it identifies all unique parts and assemblies for each FDD variation.
2. It identifies by sheet location where all major assemblies are broken down.

8.4.1 TOP MECHANICAL ASSEMBLY (TMA)

To determine what parts are used on a particular model, find the applicable model in Table 8-1. The corresponding item number represents the last three digits of the TMA number. Example: Model BR803N, TMA number 75744013. The item numbers at the top of Table 8-1 corresponds with the item numbers in Figure 8-1. All parts and assemblies that apply will be identified with an 'X' ('0' means not applicable).

8.5 REPLACEMENT PARTS

When ordering replacement parts for the FDD, the inclusion of the Model designation and the figure, item and part identification numbers for each part ordered will ensure positive identification of parts. Before ordering parts however, refer to paragraph 8.7 spare parts.

NOTE

Replacement parts for all OEM engineering evaluation units (BRXXXX TMA099) must be obtained from MPI OEM Engineering.

Table 8-1. Top Mechanical Assembly Configurator

MODELS	I T M A	ITEM NUMBERS 1111111111 0000000001 1234567890	1111111111 1111111112 1234567890	1111111111 2222222223 1234567890	1111111111 3333333334 1234567890	1111111111 4444444445 1234567890	1111111111 5555555556 1234567890	1111111111 6666666667 1234567890
BR803A	001	XX00000000	0000000000	0X000X0000	0X0000X000	XX0X0XX000	0000X00000	0000000000
BR803B	002	X0X0000000	0000000000	0X000X0000	0X0000X000	XX0X0XX000	0000X00000	0000000000
BR803C	003	X00X000000	0000000000	0X000X0000	0X0000X000	XX0X0XX000	0000X00000	0000000000
BR803D	004	X000X00000	0000000000	0X000X0000	0X0000X000	XX0X0XX000	0000X00000	0000000000
BR803E	005	X000000000	X000000000	0X000X0000	00X000X000	XX0X0XX000	0000X00000	0000000000
BR803F	006	X00000X000	0000000000	0X000X0000	00X000X000	XX0X0XX000	0000X00000	0000000000
BR803G	007	X000000000	X000000000	0X000X0000	000X00X000	XX0X0XX000	0000X00000	0000000000
BR803H	008	X0X0000000	0000000000	0X000X0000	000X00X000	XX0X0XX000	0000X00000	0000000000
BR805A	009	XX00000000	0000000000	0X00XX0000	0000X0X000	XX0X0XXX00	0000X00000	0000000000
BR805B	010	X0X0000000	0000000000	0X00XX0000	0000X0X000	XX0X0XXX00	0000X00000	0000000000
BR805C	011	X00X000000	0000000000	0X00XX0000	0000X0X000	XX0X0XXX00	0000X00000	0000000000
BR805D	012	X000X00000	0000000000	0X00XX0000	0000X0X000	XX0X0XXX00	0000X00000	0000000000
BR803N	013	XX00000000	0000000000	0X00XX0000	0000X0X000	XX0X0XXX00	0000X00000	0000000000
BR803P	014	X0X0000000	0000000000	0X00XX0000	0000X0X000	XX0X0XXX00	0000X00000	0000000000
BR803R	015	X000X00000	0000000000	0X00XX0000	0000X0X000	XX0X0XXX00	0000X00000	0000000000
BR803S	016	X00X000000	0000000000	0X00XX0000	0000X0X000	XX0X0XXX00	0000X00000	0000000000
BR803J	017	X000000000	0000X00000	0X000X0000	00X000X000	XX0X0XX0X0	0000X00000	0000000000
BR803K	018	X000000000	0000X00000	0X000X0000	000X00X000	XX0X0XX0X0	0000X00000	0000000000
BR803L	019	X000000000	0000000000	0X000X000X	00000XX000	XX000XX0X0	0000X00000	0000000000
BR803M	020	X000000000	0000000000	0X000X00X0	00000XX000	XX000XX0X0	0000X00000	0000000000
BR8A3C	021	X000000X00	0000000000	0X000X0000	00X000X000	XX0X0XX0X0	0000X00000	0000000000
BR8A3D	022	X0000000X0	0000000000	0X000X0000	00X000X000	XX0X0XX0X0	0000X00000	0000000000
BR8A3E	023	X000000X00	0000000000	0X000X0000	000X00X000	XX0X0XX0X0	0000X00000	0000000000
BR8A3F	024	X0000000X0	0000000000	0X000X0000	000X00X000	XX0X0XX0X0	0000X00000	0000000000
BR8A2A	025	XX00000000	0000000000	0X00XX0000	0X00000X00	XX0X0XX000	0000X00000	0000000000
BR803T	026	X0000X0000	0000000000	0X00XX0000	0000X0X000	XX0X0XXX00	0000X00000	0000000000
BR805E	027	X0000X0000	0000000000	0X00XX0000	0000X0X000	XX0X0XXX00	0000X00000	0000000000
BR8A3A	028	X000000000	X000000000	0X000X0000	0X0000X000	XX0X0XX000	0000X00000	0000000000
BR8A3B	029	0000000000	0000000000	0000000000	0000000000	00000X0000	0000000000	0000000000
BR8A2B	030	0000000000	0000000000	0000000000	0000000X00	00000X0000	0000X00000	0000000000
BR8A2C	031	X00X000000	0000000000	0X00XX0000	0X00000X00	XX0X0XX000	0000X00000	0000000000
BR8A2D	032	X0000X0000	0000000000	0X00XX0000	0X00000X00	XX0X0XX000	0000X00000	0000000000
BR8A2E	033	X000X00000	0000000000	0X00XX0000	0X00000X00	XX0X0XX000	0000X00000	0000000000
BR8A2F	034	X000000000	00X0000000	0X000X0000	0X0000X000	XX0X0XX000	0000X00000	0000000000
BR8A2G	035	XX00000000	0000000000	0X00XX0000	0000000X00	XX0X0XX000	0000X00000	000000000X
BR8A2H	036	X000000000	0000000000	0X0X0X0000	0X00000X00	XX00XXX000	0000X00000	0000000000
BR8A2J	037	XX00000000	0000000000	0X000X0000	0X00000X00	XX0X0XX000	0000X00000	0000000000
BR8A2K	038	X000000000	00X0000000	0X000X0000	0X00000X00	XX0X0XX000	0000X00000	0000000000
BR8A2L	039	X00000X000	0000000000	0X00XX0000	0X00000X00	XX0X0XX000	0000X00000	0000000000
BR8A2M	040	X000000000	0000000000	0X00XX0000	0X00000XX0	XX0X0XX0X0	0000X00000	0X00000000
BR8A2N	041	X000X00000	0000000000	0X000X0000	0X00000X00	XX0X0XX000	0000X00000	0000000000
BR8A2P	042	000000000X	0000X00000	0X000X0000	X00000X00X	00XX0X00X0	0000X0000X	000X000X00
BR8A2R	043	0000000000	0000000000	0000000000	0000000000	0000000000	0000000000	0000000000
BR8A4A	044	0000000000	0000X00000	0X000XXX00	X00000X00X	00X00X00X0	0X00XXXX00	000X000X00
BR8A4B	045	0000000000	0000000000	0000000000	0000000000	0000000000	0000000000	0000000000
BR8A7A	046	000000000X	0000X00000	0X000X0000	X00000X00X	00XX0X00X0	0000X00000	000X000X00
BR8A5A	047	X0000000X0	0000000000	0X00XX0000	0000000X00	XX0X0XX0X0	0000X00000	XX0000000
BR8A5B	048	X000000000	0000000000	0X00XX0000	0000000XX0	XX0X0XX0X0	0000X00000	XX0000000
BR8A2W	049	X00000X000	0000000000	0X000X0000	0X0000X000	XX0X0XX000	0000X00000	0000000000
BR8A2Y	050	X000000000	00X0000000	0X000X0000	0X0000X000	XX0X0XX000	0000X00000	0000000000
BR8A6B	051	X0X0000000	0000000000	0X000X0000	0X0000X000	XX0X0XX000	0000X00000	0000000000
BR803U	052	X000000000	X000000000	0X000X0000	0X0000X000	XX0X0XX000	0000X00000	0000000000
BR8A2S	053	X000000000	0000000000	0X00XX0000	0X00000XX0	XX0X0XX0X0	0000X00000	0000000000
BR8A2T	054	X000000X00	0000000000	0X00XX0000	0X00000X00	XX0X0XX0X0	0000X00000	0000000000
BR8A2U	055	X000000000	X000000000	0X000X0000	00X000X000	XX0X0XX000	0000X00000	0000000000
	056	X000000000	00X0000000	0X00XX0000	0X00000X00	XX0X0XX000	0000X00000	0000000000
BR8A2Z	057	X0000000X0	0000000000	0X000X0000	0X00000X00	XX0X0XX0X0	0000X00000	0000000000
BR8A3G	058	XX00000000	0000000000	0X00XX0000	0X00000X00	XX0X0XX000	0000X00000	0000000000
BR8A3H	059	X0X0000000	0000000000	0X00XX0000	0X00000X00	XX0X0XX000	0000X00000	0000000000
	060	X000000000	00X0000000	0X000X0000	0X00000X00	XX0X0XX000	0000X00000	0000X00000
BR8A5C	061	X000000000	000X000000	0X00XX0000	0000000X00	XX0X0XX0X0	0000X00000	XX0000000
BR8A5D	062	X000000000	0000000000	0X00XX0000	0000000XX0	XX0X0XX0X0	0000X00000	XX0000000
BRXXXX	099	OEM ENGINEERING UNIT						

ITEM	IDENT NO	DESCRIPTION	WHERE USED
101	83458201	CHASSIS ASM-COMMON PARTS	TMA
102	75291920	DRIVE MOTOR ASM 60 HZ	TMA
103	75291923	DRIVE MOTOR ASM 50 HZ	TMA
104	75291926	DRIVE MOTOR ASM 60 HZ	TMA
105	75291927	DRIVE MOTOR ASM 50 HZ	TMA
106	75291928	DRIVE MOTOR ASM 50 HZ	TMA
107	75291925	DRIVE MOTOR ASM 50 HZ	TMA
108	75881778	DRIVE MOTOR ASM 50 HZ	TMA
109	75881775	DRIVE MOTOR ASM 60 HZ	TMA
111	75291921	DRIVE MOTOR ASM 60 HZ	TMA
113	75291924	DRIVE MOTOR ASM 60 HZ	TMA
115	75891480	CHASSIS ASM-COMMON PARTS	TMA
122	94277416	STRAP, CABLE TIE	TMA
124	75291902	DRIVE MOTOR ASM 50 HZ	TMA
125	83427801	WRITE PROTECT ASM	TMA
126	92602001	CLAMP	TMA
127	77830690	DISKETTE DETECT ASM	TMA
128	75881779	DRIVE MOTOR ASM 60 HZ	TMA
129	75881780	DRIVE MOTOR ASM 50 HZ	TMA
130	75881781	DRIVE MOTOR ASM 60 HZ	TMA
131	83401806	FRONT PANEL ASM	TMA
132	83401801	FRONT PANEL ASM	TMA
133	83401802	FRONT PANEL ASM	TMA
134	83401803	FRONT PANEL ASM	TMA
135	83401804	FRONT PANEL ASM	TMA
136	83401805	FRONT PANEL ASM	TMA
137	75791510	ACTUATOR ASM	TMA
138	75791511	ACTUATOR ASM	TMA
140	77830685	UPPER HARNESS ASM	TMA
141	75747301	UPPER HARNESS ASM	TMA
142	83403502	LOWER HARNES ASM	TMA
143	83403503	LOWER HARNESS ASM	TMA
144	83403700	CONNECTOR BRACKET	TMA
145	75272300	CONNECTOR BRACKET	TMA
146	77830538	CSA LABEL	TMA

ITEM	IDENT NO	DESCRIPTION	WHERE USED
147	77594901	TRACK SWITCH ASM	TMA
148	83460101	AMP CONN KIT	TMA
149	75746702	CAPACITOR BRACKET	TMA
152	77832691	MOUNTING KIT	TMA
155	93592240	SCREW-WASHER	TMA
156	77830641	AC CONN & RELAY ASM	TMA
157	77830995	COVER	TMA
158	17901508	SCREW	TMA
160	77834336	LABEL, FCO	TMA
161	77834543	FRONT PANEL ASSY	TMA
162	75746701	CAPACITOR BRACKET	TMA
164	77836055	LABEL	TMA
168	77594704	OPT TRACK SENSE ASSY	TMA
170	83401808	FRONT PANEL ASSY	TMA
336	93592160	SCREW, SELF TAP	TMA

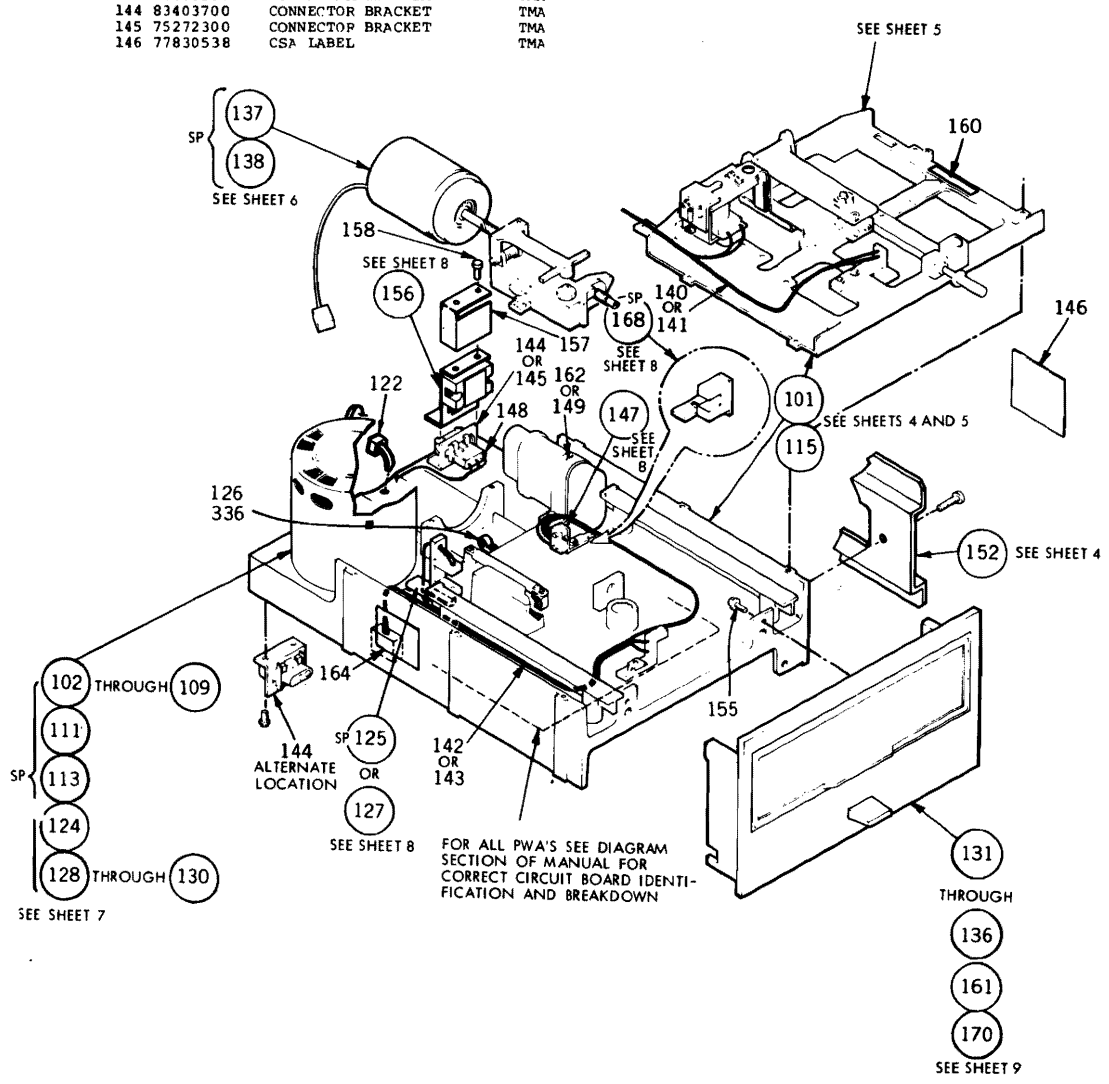

Figure 8-1. Top Mechanical Assembly

ITEM	IDENT NO	DESCRIPTION	WHERE USED
101	83458201	CHASSIS ASM-COMMON PARTS	TMA
115	75891480	CHASSIS ASM-COMMON PARTS	TMA
152	77832691	MOUNTING KIT	TMA
178	10125801	WASHERS SPR LOCK	101 115
180	75293203	BELT-FLAT	101 115
183	75774732	CLIP-PUSH IN	101 115
184	75774736	CLIP-PUSH IN	101 115
186	10125803	WASHERS SPR LOCK	101 115
188	77832145	LABEL IDENT	101 115
190	94217702	NUT-SELF LOCK, STL 8	101 115
191	92073022	BEARING FLANGED	101 115
192	93529005	WASHER-SPRING WAVE	101 115
196	16402506	CLAMP CABLE	101 115
199	09000403	SCREW BIND HEAD	101 115
202	10126222	SCREW HEX SOC HD	101 115
205	93592086	SCR HEX SELF TAP	101 115
208	92602003	CLAMP, CABLE-NYLON	101 115
209	10126214	SCR HEX SOC HD CAP	101 115
210	83427900	PLATE-NUT	101 115
218	75882450	CARRIAGE STOP	101 115
219	93592488	SCREW	101 115
255	10127131	SCREW	152
256	10125805	LOCK WASHER	152
301	77830975	ADAPTER	152
336	93592160	SCREW, SELF TAP	101 115
339	10126401	STAR LOCK WASHER	101 115
340	75731302	ELECTRICAL SYMBOL	101 115
342	77594800	DECAL	152
360	75886086	BASE-MECHANISM, DIE	101
361	83403601	SPINDLE	101 115
362	75747000	SPACER BEARING	101 115
363	75745200	PULLEY-SPINDLE	101 115
364	75886087	BASE-MECHANISM, DIE	115
365	83461800	CLAMP, STEPPER MOTOR	101 115
366	75292400	GUIDE-CARRIAGE	101 115
377	93592486	SCREW	101 115
388	10125603	WASHER	101 115

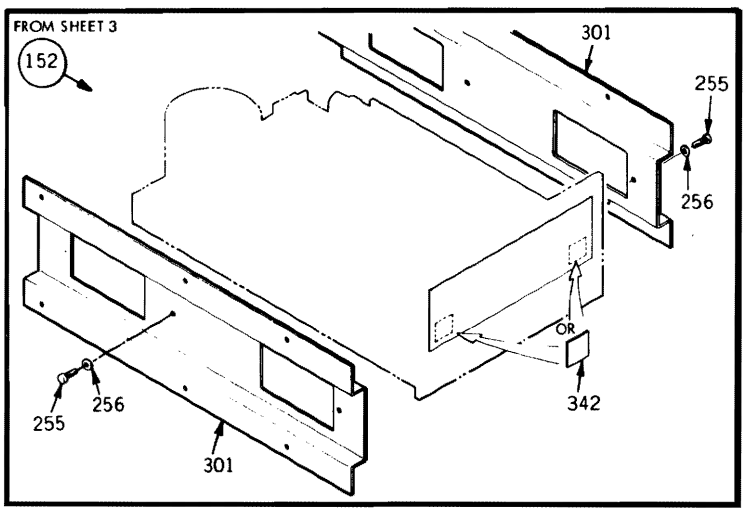

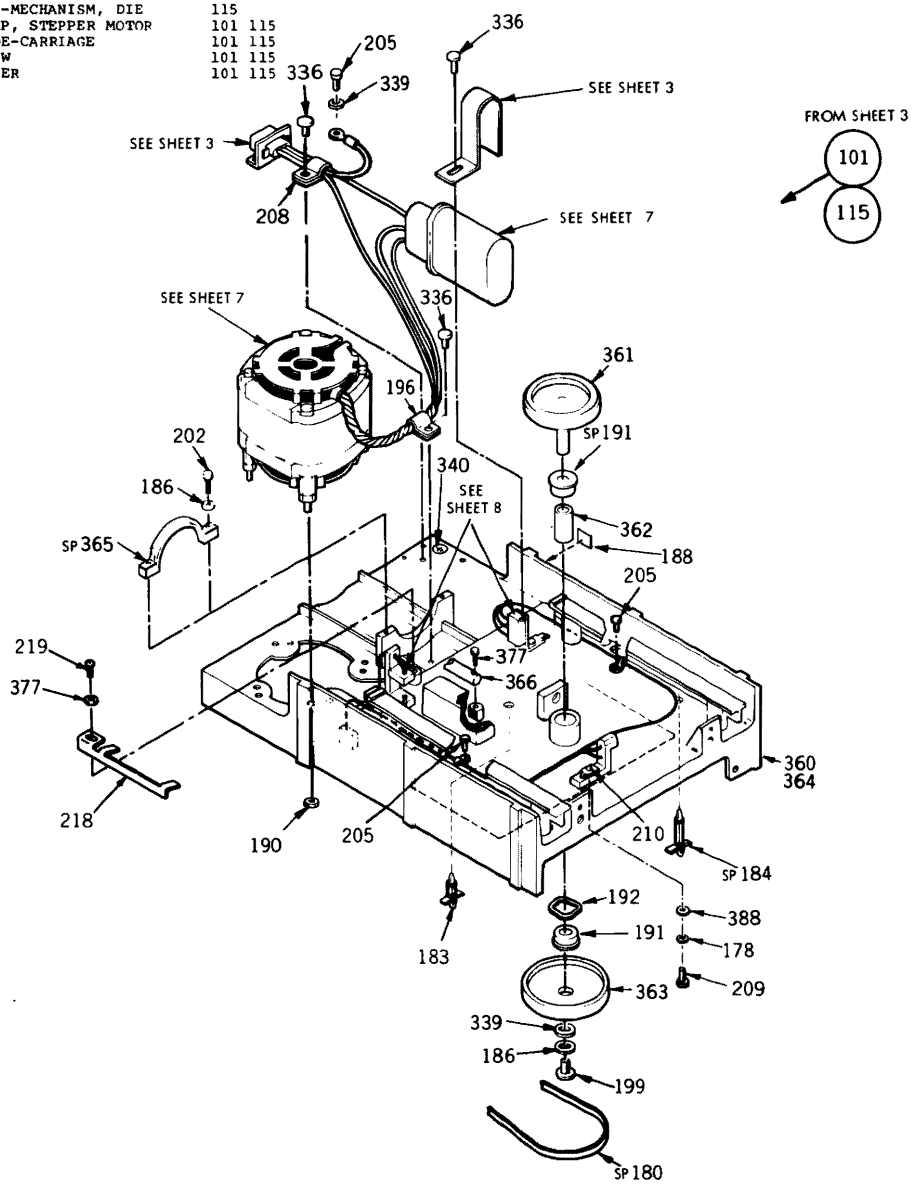

Figure 8-2. FDD Common Parts (Sheet 1 of 2)

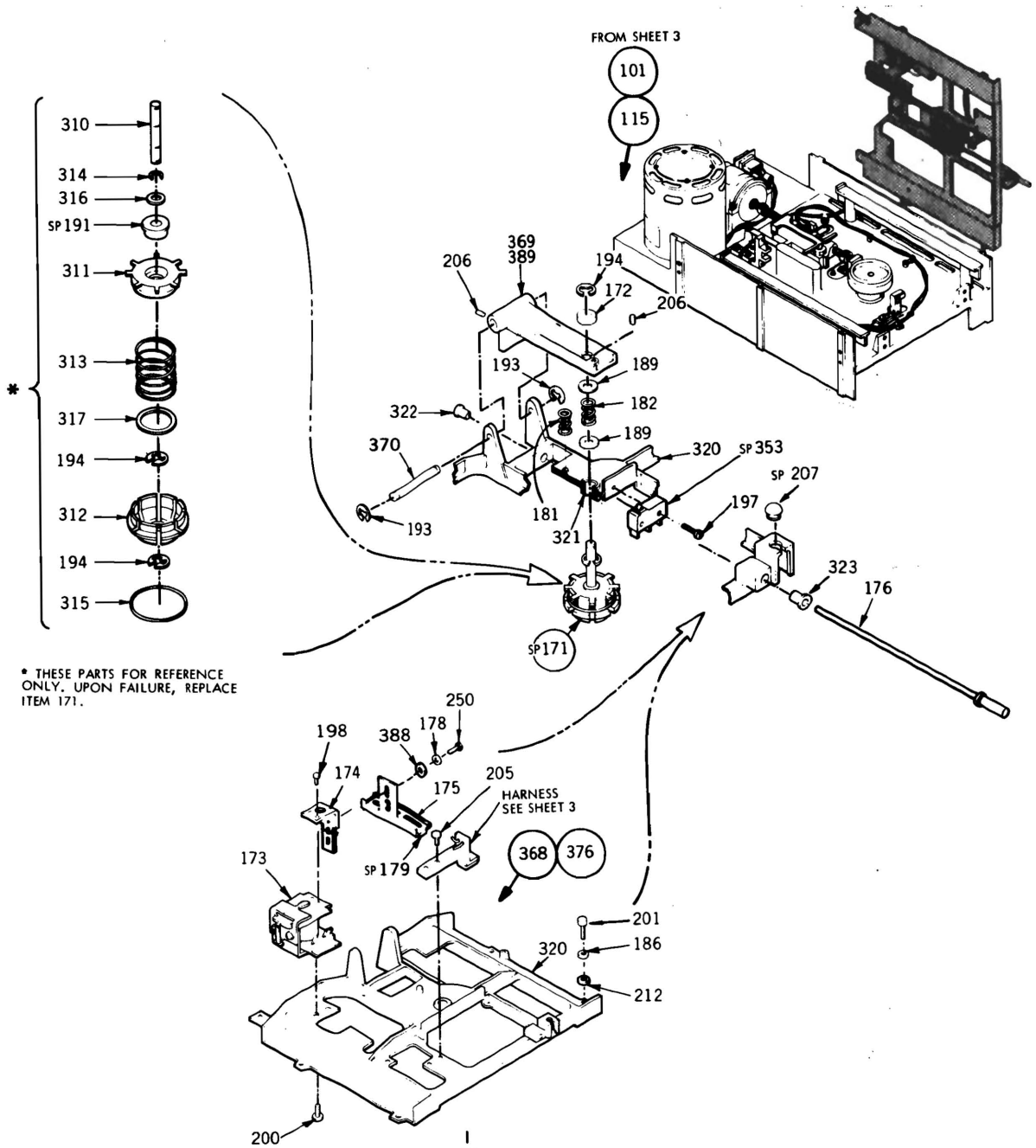

ITEM	IDENT NO	DESCRIPTION	WHERE USED
101	83458201	CHASSIS ASM-COMMON PARTS	TMA
115	75891480	CHASSIS ASM-COMMON PARTS	TMA
171	83402101	CONE ASM	101 115
172	75273200	BUSHING	101 115
173	75747202	SOLENOID	101 115
174	77834331	EXTENSION ARMATURE	101 115
175	77834326	BAIL APMATURE	101 115
176	75885163	PUSH ROD ASSY	101 115
178	10125801	WASHERS SPR LOCK	101 115
179	77830732	FOAM PAD	101 115
181	75292609	SPRING-COMPRESSION	101 115
182	75292617	SPRING-COMPRESSION	101 115
186	10125803	WASHERS SPR LOCK	101 115
189	77835200	WASHER, NYLON	101 115
191	92073022	BEARING FLANGED	171
193	92033037	RING RETAINING	101 115
194	92033038	RETAINING RING	101 171
194	92033038	RETAINING RING	115
197	09000005	SCREW BIND HEAD	101 115
198	09000202	SCREW BIND HEAD	101 115
200	09000504	SCREW BIND HEAD	101 115
201	10126219	SCR HEX SOC HD CAP	101 115
205	93592086	SCR HEX SELF TAP	101 115

ITEM	IDENT NO	DESCRIPTION	WHERE USED
206	83413408	SCREW-SELF LOCKING	101 115
207	83411202	BUMPER DOOR	101 115
212	75806503	FLAT WASHER	101 115
250	93592482	SCR HEX HD	101 115
310	75790803	SHAFT	171
311	83426400	EXPANDER-CONE	171
312	77830481	CONE-DISK LOAD	171
313	83402200	SPRING CONE	171
314	92033029	RETAINING RING	171
315	83409701	SPRING-GARTER	171
316	94047069	WASHER	171
317	77835201	WASHER	171
320	75812011	SUPPORT DIE CAST MACHINED	368
321	75292807	BEARING-CYLINDRICAL	368
322	75813201	BUSHING, PUSH ROD MOLDED	368
323	75813202	BUSHING, PUSH ROD MOLDED	368
353	75724401	ACTUATOR SWITCH	101 115
368	75812021	SUPPORT-ASSEMBLED	101
369	83402803	ARM-DISK LOAD	101
370	75273000	PIN DISK LOAD ARM	101 115
376	75812022	SUPPORT-ASSEMBLED	115
388	10125603	WASHER	101 115
389	83402804	ARM-DISK LOAD	115

Figure 8-2. FDD Common Parts (Sheet 2 of 2)

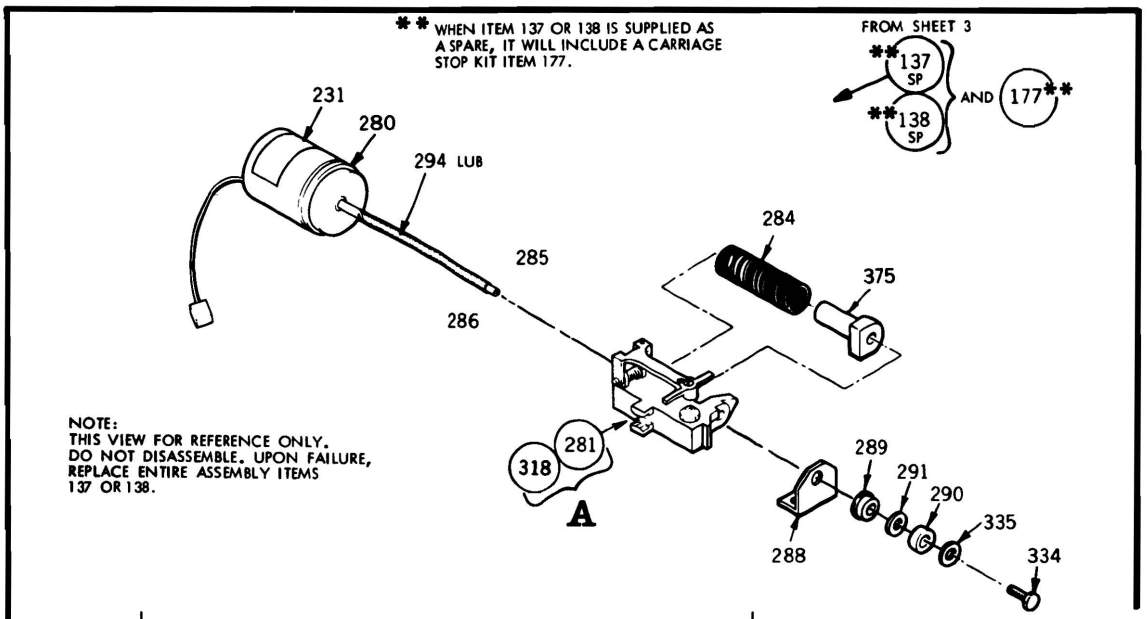

ITEM	IDENT NO	DESCRIPTION	WHERE USED
137	75791510	ACTUATOR ASM	TMA
138	75791511	ACTUATOR ASM	TMA
177	75882711	CARRIAGE STOP KIT	137 138
231	75790000	CAUTION LABEL	137 138
257	83460400	HOLDER PAD	326
280	75747801	STEPPER MOTOR ASM	137 138
281	77839902	CARRIAGE ASM	137
284	77594000	SPRING-CARRIAGE	137 138
286	10126209	SCR-SOC HP CAP	281 318
288	75813000	RETAINER-BEARING	137 138
289	92073020	BEARING FLANGED	137 138
290	94217207	BRG BALL-EXT INNER R	137 138
291	93529001	WASHER-SPRING WAVE	137 138
294	77832456	LUBRICANT	137 138
306	83460701	PAD HEAD LOAD	326
318	77839901	CARRIAGE ASSY	138
325	77603100	ARM-HEAD LOAD	281 318
326	77830482	HOLDER-PAD ASSY	281 318
329	77830998	PIN CARRIAGE	281 318
330	77830999	SPRING TORSION	281 318
331	94047068	WASHER, SPECIAL	281 318
333	10127310	SCREW SLOTTED	281 318
334	10125001	SCREW HEX HD	137 138
335	94047000	WASHER	137 138

ITEM	IDENT NO	DESCRIPTION	WHERE USED
346	83426204	CARRIAGE HEAD ASSY	281
358	83426205	CARRIAGE HEAD ASSY	318
373	77835304	LABEL	324 358
375	83427303	NUT CARRIAGE	137 138

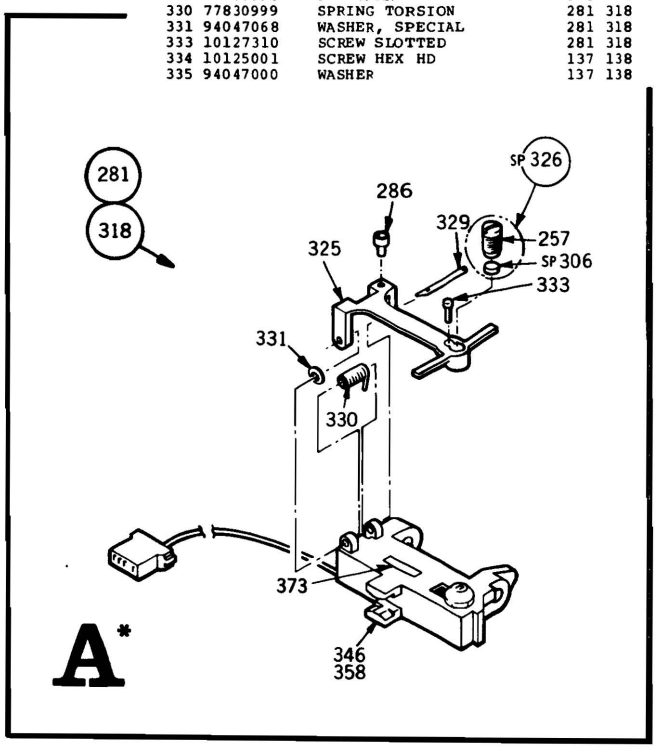

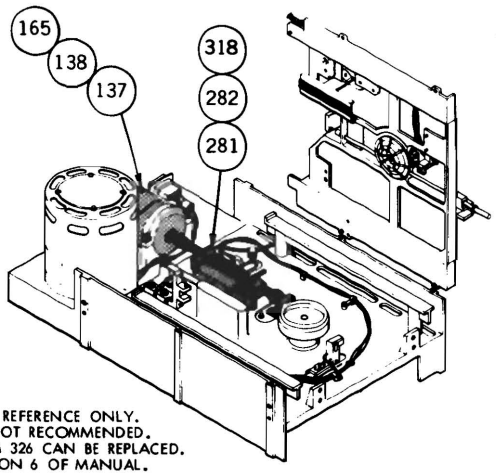

* THIS VIEW FOR REFERENCE ONLY. DISASSEMBLY NOT RECOMMENDED. HOWEVER, ITEM 326 CAN BE REPLACED. REFER TO SECTION 6 OF MANUAL.

Figure 8-3. Actuator and Carriage Assemblies

ITEM	IDENT NO	DESCRIPTION	WHERE USED
102	75291920	DRIVE MOTOR ASM 60 HZ	TMA
103	75291923	DRIVE MOTOR ASM 50 HZ	TMA
104	75291926	DRIVE MOTOR ASM 60 HZ	TMA
105	75291927	DRIVE MOTOR ASM 50 HZ	TMA
106	75291928	DRIVE MOTOR ASM 50 HZ	TMA
107	75291925	DRIVE MOTOR ASM 50 HZ	TMA
108	75881778	DRIVE MOTOR ASM 50 HZ	TMA
109	75881775	DRIVE MOTOR ASM 60 HZ	TMA
111	75291921	DRIVE MOTOR ASM 60 HZ	TMA
113	75291924	DRIVE MOTOR ASM 60 HZ	TMA
124	75291902	DRIVE MOTOR ASM 50 HZ	TMA
128	75881779	DRIVE MOTOR ASM 60 HZ	TMA
129	75881780	DRIVE MOTOR ASM 50 HZ	TMA
130	77881781	DRIVE MOTOR ASM 60 HZ	TMA

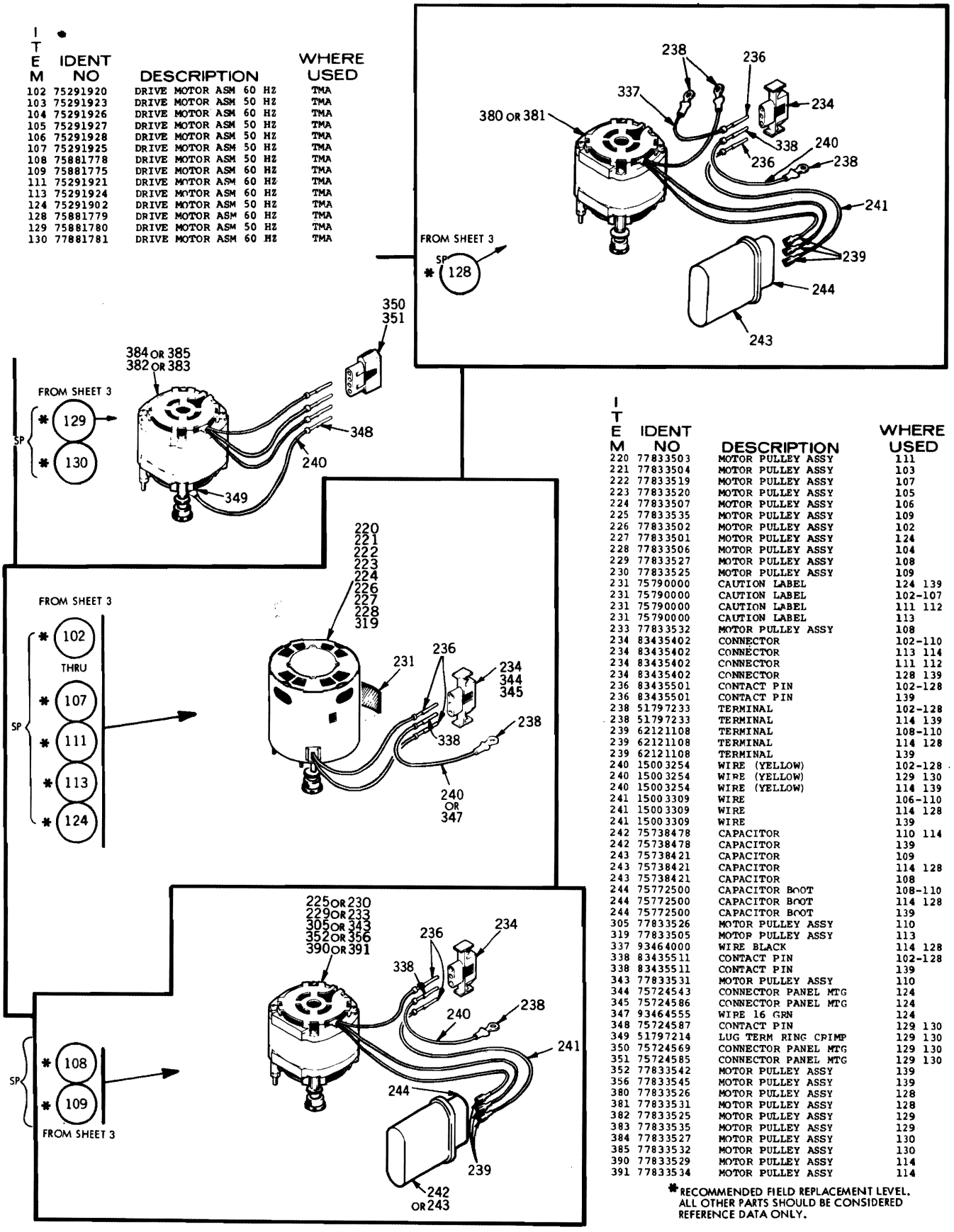

ITEM	IDENT NO	DESCRIPTION	WHERE USED
220	77833503	MOTOR PULLEY ASSY	111
221	77833504	MOTOR PULLEY ASSY	103
222	77833519	MOTOR PULLEY ASSY	107
223	77833520	MOTOR PULLEY ASSY	105
224	77833507	MOTOR PULLEY ASSY	106
225	77833535	MOTOR PULLEY ASSY	109
226	77833502	MOTOR PULLEY ASSY	102
227	77833501	MOTOR PULLEY ASSY	124
228	77833506	MOTOR PULLEY ASSY	104
229	77833527	MOTOR PULLEY ASSY	108
230	77833525	MOTOR PULLEY ASSY	109
231	75790000	CAUTION LABEL	124 139
231	75790000	CAUTION LABEL	102-107
231	75790000	CAUTION LABEL	111 112
231	75790000	CAUTION LABEL	113
233	77833532	MOTOR PULLEY ASSY	108
234	83435402	CONNECTOR	102-110
234	83435402	CONNECTOR	113 114
234	83435402	CONNECTOR	111 112
234	83435402	CONNECTOR	128 139
236	83435501	CONTACT PIN	102-128
236	83435501	CONTACT PIN	139
238	51797233	TERMINAL	102-128
238	51797233	TERMINAL	114 139
239	62121108	TERMINAL	108-110
239	62121108	TERMINAL	114 128
239	62121108	TERMINAL	139
240	15003254	WIRE (YELLOW)	102-128
240	15003254	WIRE (YELLOW)	129 130
240	15003254	WIRE (YELLOW)	114 139
241	15003309	WIRE	106-110
241	15003309	WIRE	114 128
241	15003309	WIRE	139
242	75738478	CAPACITOR	110 114
242	75738478	CAPACITOR	139
243	75738421	CAPACITOR	109
243	75738421	CAPACITOR	114 128
243	75738421	CAPACITOR	108
244	75772500	CAPACITOR BOOT	108-110
244	75772500	CAPACITOR BOOT	114 128
244	75772500	CAPACITOR BOOT	139
305	77833526	MOTOR PULLEY ASSY	110
319	77833505	MOTOR PULLEY ASSY	113
337	93464000	WIRE BLACK	114 128
338	83435511	CONTACT PIN	102-128
338	83435511	CONTACT PIN	139
343	77833531	MOTOR PULLEY ASSY	110
344	75724543	CONNECTOR PANEL MTG	124
345	75724586	CONNECTOR PANEL MTG	124
347	93464555	WIRE 16 GRN	124
348	75724587	CONTACT PIN	129 130
349	51797214	LUG TERM RING CRIMP	129 130
350	75724569	CONNECTOR PANEL MTG	129 130
351	75724585	CONNECTOR PANEL MTG	129 130
352	77833542	MOTOR PULLEY ASSY	139
356	77833545	MOTOR PULLEY ASSY	139
380	77833526	MOTOR PULLEY ASSY	128
381	77833531	MOTOR PULLEY ASSY	128
382	77833525	MOTOR PULLEY ASSY	129
383	77833535	MOTOR PULLEY ASSY	129
384	77833527	MOTOR PULLEY ASSY	130
385	77833532	MOTOR PULLEY ASSY	130
390	77833529	MOTOR PULLEY ASSY	114
391	77833534	MOTOR PULLEY ASSY	114

*RECOMMENDED FIELD REPLACEMENT LEVEL. ALL OTHER PARTS SHOULD BE CONSIDERED REFERENCE DATA ONLY.

Figure 8-4. Drive Motor Assembly

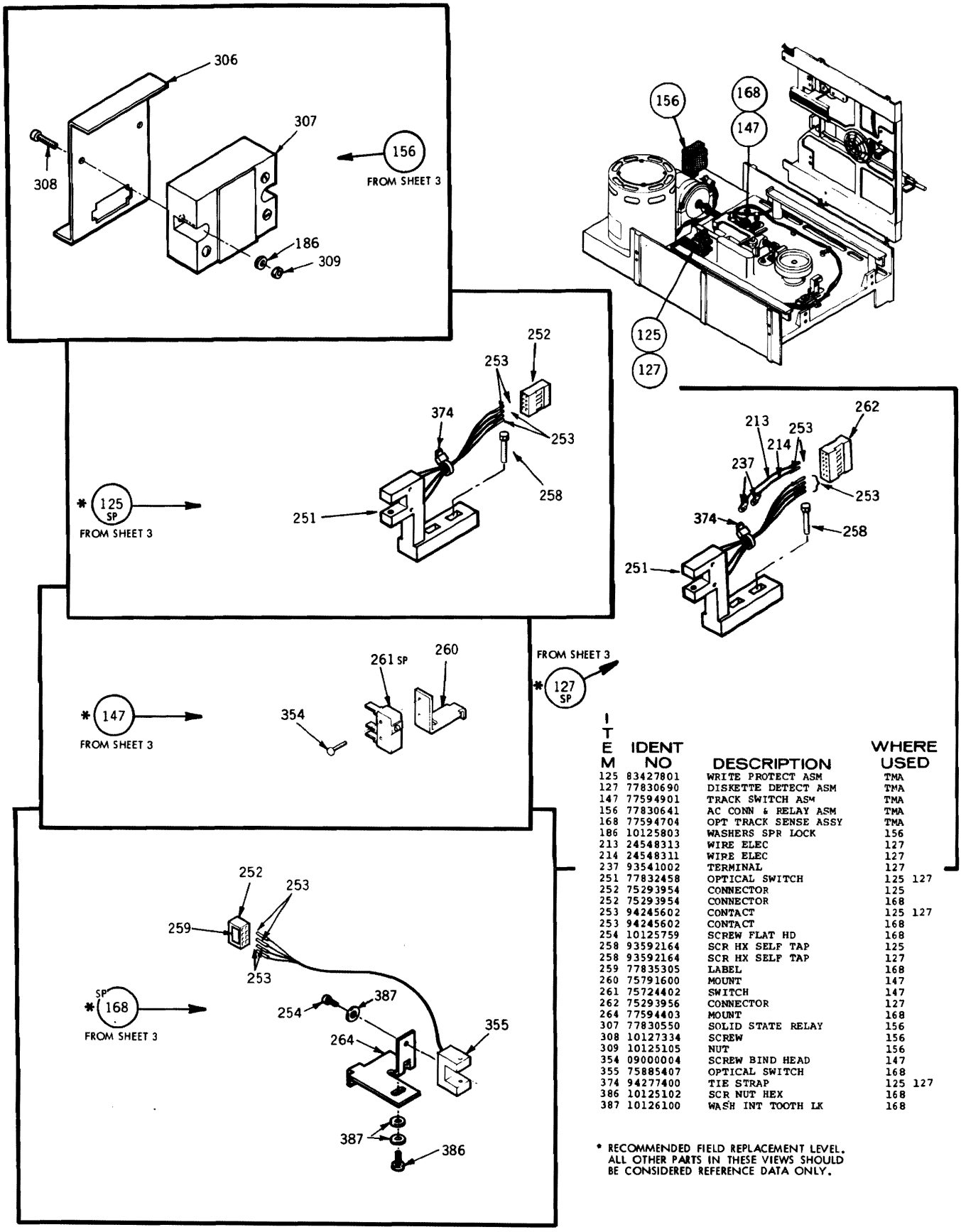

ITEM	IDENT NO	DESCRIPTION	WHERE USED
125	83427801	WRITE PROTECT ASM	TMA
127	77830690	DISKETTE DETECT ASM	TMA
147	77594901	TRACK SWITCH ASM	TMA
156	77830641	AC CONN & RELAY ASM	TMA
168	77594704	OPT TRACK SENSE ASSY	TMA
186	10125803	WASHERS SPR LOCK	156
213	24548313	WIRE ELEC	127
214	24548311	WIRE ELEC	127
237	93541002	TERMINAL	127
251	77832458	OPTICAL SWITCH	125 127
252	75293954	CONNECTOR	125
252	75293954	CONNECTOR	168
253	94245602	CONTACT	125 127
253	94245602	CONTACT	168
254	10125759	SCREW FLAT HD	168
258	93592164	SCR HX SELF TAP	125
258	93592164	SCR HX SELF TAP	127
259	77835305	LABEL	168
260	75791600	MOUNT	147
261	75724402	SWITCH	147
262	75293956	CONNECTOR	127
264	77594403	MOUNT	168
307	77830550	SOLID STATE RELAY	156
308	10127334	SCREW	156
309	10125105	NUT	156
354	09000004	SCREW BIND HEAD	147
355	75885407	OPTICAL SWITCH	168
374	94277400	TIE STRAP	125 127
386	10125102	SCR NUT HEX	168
387	10126100	WASH INT TOOTH LK	168

* RECOMMENDED FIELD REPLACEMENT LEVEL. ALL OTHER PARTS IN THESE VIEWS SHOULD BE CONSIDERED REFERENCE DATA ONLY.

Figure 8-5. Miscellaneous Sub-Assemblies

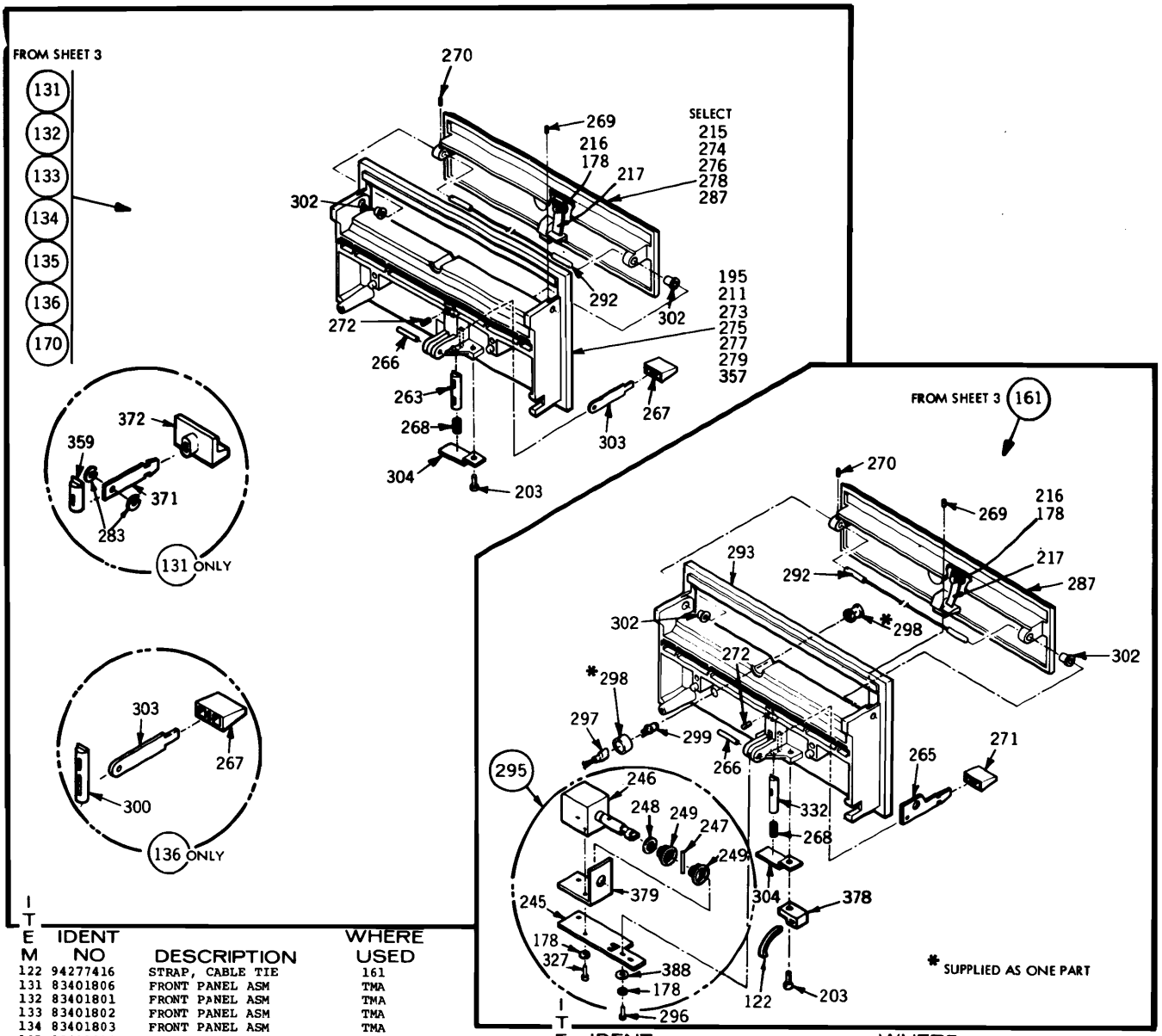

ITEM	IDENT NO	DESCRIPTION	WHERE USED
122	94277416	STRAP, CABLE TIE	161
131	83401806	FRONT PANEL ASM	TMA
132	83401801	FRONT PANEL ASM	TMA
133	83401802	FRONT PANEL ASM	TMA
134	83401803	FRONT PANEL ASM	TMA
135	83401804	FRONT PANEL ASM	TMA
136	83401805	FRONT PANEL ASM	TMA
161	77834543	FRONT PANEL ASSY	TMA
170	83401808	FRONT PANEL ASSY	TMA
178	10125801	WASHEPS SPR LOCK	161
178	10125801	WASHERS SPR LOCK	131-136
195	83426624	PANEL FRONT FIN BLK	132
203	93592162	SCR HX WASHER SLF TA	131-136
203	93592162	SCR HX WASHER SLF TA	161
211	83426626	PANEL FRONT FIN BLU	170
215	75812126	DOOR FINISHED BLU	170
216	93592080	SCR HEX WSR HD	131-136
216	93592080	SCR HEX WSR HD	161
217	75884657	LEAF SPRING	131-136
217	75884657	LEAF SPRING	161
245	77835131	SOLENOID BRKT	295
246	77834212	SOLENOID	295
247	93530103	PIN ROLL	295
248	75806507	WASHER	295
249	77834323	SPRING	295
263	83402301	LATCH-DOOR INJEC MOL	131-136
265	77834318	LEVER-DOOR	161
266	92096099	PIN-GROOVED	131-136
266	92096099	PIN-GROOVED	161
267	75292700	KNOB-LEVER	132-136
268	83401200	SPRING-LATCH	131-136
268	83401200	SPRING-LATCH	161
269	83413406	SCR SET SOC HD 6-32	131-136
269	83413406	SCR SET SOC HD 6-32	161
270	83413407	SCREW SET SOC HD 4	131-136
270	83413407	SCREW SET SOC HD 4	161
271	75292701	KNOB-LEVER	161
272	83413404	SCREW-SELF LOCKING	131-136
272	83413404	SCREW-SELF LOCKING	161

ITEM	IDENT NO	DESCRIPTION	WHERE USED
273	83426621	PANEL FRONT, BLACK HW	133
274	75812121	DOOR, FINISHED, PA-BLK	133
275	83426622	PANEL FRONT, WHITE HW	134
276	75812122	DOOR, FINISHED, PA-WHT	134
277	83426623	PANEL FRONT, FIN BLUE	135
278	75812123	DOOR, FINISHED, PA-BLU	135
279	83461110	FRONT PANEL FINISHED	136
283	75881371	SHIM	131
287	75812124	DOOR FINISHED BLACK	132 136
287	75812124	DOOR FINISHED BLACK	161
287	75812124	DOOR FINISHED BLACK	131
292	83403202	BAR TORSION DOOR	131-136
292	83403202	BAR TORSION DOOR	161
293	83461111	FRONT PANEL	161
295	77835133	DOOR LK ASSY	161
296	91976207	SCREW	161
297	77833702	HARNESS DR LK	161
298	75810703	DIODE LIGHT	161
299	75810701	DIODE LIGHT	161
300	83461200	LATCH DOOR	136
302	83401500	BUSHING-DOOR INJECT	131-136
302	83401500	BUSHING-DOOR INJECT	161
303	75746000	LEVER-DOOR	136 132
304	75746800	BRACKET LATCH	131-136
304	75746800	BRACKET LATCH	161
327	10127321	SCR PAN HD	295
332	75889161	LATCH DOOR	161
357	77832410	PANEL FRONT BLK-BURR	131
359	77830977	LATCH DOOR	131
371	75881370	LEVER DOOR	131
372	77832119	BUTTON LATCH	131
378	95862300	ANCHOR CABLE TIE	161
379	77835132	SPACER BKT	295

Figure 8-6. Front Panel Assembly

8.6 PARTS LIST INSTRUCTIONS

8.6.1 ILLUSTRATION PARTS LISTS

The parts list for each illustration is an extract from the Top-Down Assembly/Component Parts list and contains only those parts depicted. Refer to paragraph 8.6.2 for explanation of parts list.

8.6.2 TOP-DOWN ASSEMBLY/COMPONENT PARTS LIST

a. Starts at TMA level and lists all parts in Item Number sequence.
b. Correlates Item numbers with part Identification numbers and the Description of each.
c. Identifies where each part is used (where used column) within the device by listing the item number(s) of the next higher assembly.

NOTE

Where used data for Figure 8-1 is labeled TMA. Refer to Table 8-1 for correct application of parts (refer to paragraph 8.4).

d. Defines the location of each part by listing the sheet number(s) where depicted.

NOTE

The same part may be used in any number of assemblies or sheet locations.

8.6.3 CROSS REFERENCE LIST

a. In conjunction with the referenced identification code number and illustrations defines the service code number. tions
b. Lists all spare parts in numeric sequence.

8.6.4 SHEET NUMBER REFERENCING

Sheet number references of Parts Lists and Illustrations refers to sheet locations in this section. Example: Sheet reference 3 represents sheet 8-3, sheet 4 represents sheet 8-4, etc.

8.7 SPARE PARTS (SP)

This Illustrated Parts Breakdown is complete to the extent that all parts and assemblies are depicted and identified. Replacement part availability depends on the materials and provisioning operation of the supplier.

To assist the service representative in selecting replacement parts with minimum requisitioning lead times, engineering recommended spare parts which reflect the intended service level of the device are identified with the letters SP adjacent to the item number on the face of each illustration. Replaceable non-spared items will require longer requisitioning lead times.

Top-Down Assembly/Component Parts List

ITEM	IDENT NO	DESCRIPTION	WHERE USED	SH
101	83458201	CHASSIS ASM-COMMON PARTS	TMA	S3
101	83458201	CHASSIS ASM-COMMON PARTS	TMA	S4
101	83458201	CHASSIS ASM-COMMON PARTS	TMA	S5
102	75291920	DRIVE MOTOR ASM 60 HZ	TMA	S3
102	75291920	DRIVE MOTOR ASM 60 HZ	TMA	S7
103	75291923	DRIVE MOTOR ASM 50 HZ	TMA	S3
103	75291923	DRIVE MOTOR ASM 50 HZ	TMA	S7
104	75291926	DRIVE MOTOR ASM 60 HZ	TMA	S3
104	75291926	DRIVE MOTOR ASM 60 HZ	TMA	S7
105	75291927	DRIVE MOTOR ASM 50 HZ	TMA	S3
105	75291927	DRIVE MOTOR ASM 50 HZ	TMA	S7
106	75291928	DRIVE MOTOR ASM 50 HZ	TMA	S3
106	75291928	DRIVE MOTOR ASM 50 HZ	TMA	S7
107	75291925	DRIVE MOTOR ASM 50 HZ	TMA	S3
107	75291925	DRIVE MOTOR ASM 50 HZ	TMA	S7
108	75881778	DRIVE MOTOR ASM 50 HZ	TMA	S3
108	75881778	DRIVE MOTOR ASM 50 HZ	TMA	S7
109	75881775	DRIVE MOTOR ASM 60 HZ	TMA	S3
109	75881775	DRIVE MOTOR ASM 60 HZ	TMA	S7
111	75291921	DRIVE MOTOR ASM 60 HZ	TMA	S3
111	75291921	DRIVE MOTOR ASM 60 HZ	TMA	S7
113	75291924	DRIVE MOTOR ASM 60 HZ	TMA	S3
113	75291924	DRIVE MOTOR ASM 60 HZ	TMA	S7
115	75891480	CHASSIS ASM-COMMON PARTS	TMA	S3
115	75891480	CHASSIS ASM-COMMON PARTS	TMA	S4
115	75891480	CHASSIS ASM-COMMON PARTS	TMA	S5
122	94277416	STRAP, CABLE TIE	TMA	S3
122	94277416	STRAP, CABLE TIE	161	S9
124	75291902	DRIVE MOTOR ASM 50 HZ	TMA	S3
124	75291902	DRIVE MOTOR ASM 50 HZ	TMA	S7
125	83427801	WRITE PROTECT ASM	TMA	S3
125	83427801	WRITE PROTECT ASM	TMA	S8
126	92602001	CLAMP	TMA	S3
127	77830690	DISKETTE DETECT ASM	TMA	S3
127	77830690	DISKETTE DETECT ASM	TMA	S8
128	75881779	DRIVE MOTOR ASM 60 HZ	TMA	S3
128	75881779	DRIVE MOTOR ASM 60 HZ	TMA	S7
129	75881780	DRIVE MOTOR ASM 50 HZ	TMA	S3
129	75881780	DRIVE MOTOR ASM 50 HZ	TMA	S7
130	75881781	DRIVE MOTOR ASM 60 HZ	TMA	S3
130	77881781	DRIVE MOTOR ASM 60 HZ	TMA	S7
131	83401806	FRONT PANEL ASM	TMA	S3
131	83401806	FRONT PANEL ASM	TMA	S9
132	83401801	FRONT PANEL ASM	TMA	S3
132	83401801	FRONT PANEL ASM	TMA	S9
133	83401802	FRONT PANEL ASM	TMA	S3
133	83401802	FRONT PANEL ASM	TMA	S9
134	83401803	FRONT PANEL ASM	TMA	S3
134	83401803	FRONT PANEL ASM	TMA	S9
135	83401804	FRONT PANEL ASM	TMA	S3
135	83401804	FRONT PANEL ASM	TMA	S9
136	83401805	FRONT PANEL ASM	TMA	S3
136	83401805	FRONT PANEL ASM	TMA	S9
137	75791510	ACTUATOR ASM	TMA	S3
137	75791510	ACTUATOR ASM	TMA	S6
138	75791511	ACTUATOR ASM	TMA	S3
138	75791511	ACTUATOR ASM	TMA	S6
140	77830685	UPPER HARNESS ASM	TMA	S3
141	75747301	UPPER HARNESS ASM	TMA	S3
142	83403502	LOWER HARNES ASM	TMA	S3
143	83403503	LOWER HARNESS ASM	TMA	S3
144	83403700	CONNECTOR BRACKET	TMA	S3
145	75272300	CONNECTOR BRACKET	TMA	S3
146	77830538	CSA LABEL	TMA	S3
147	77594901	TRACK SWITCH ASM	TMA	S3
147	77594901	TRACK SWITCH ASM	TMA	S8
148	83460101	AMP CONN KIT	TMA	S3
149	75746702	CAPACITOR BRACKET	TMA	S3
152	77832691	MOUNTING KIT	TMA	S3
152	77832691	MOUNTING KIT	TMA	S4
155	93592240	SCREW-WASHER	TMA	S3
156	77830641	AC CONN & RELAY ASM	TMA	S3
156	77830641	AC CONN & RELAY ASM	TMA	S8
157	77830995	COVER	TMA	S3
158	17901508	SCREW	TMA	S3
160	77834336	LABEL, FCO	TMA	S3
161	77834543	FRONT PANEL ASSY	TMA	S3
161	77834543	FRONT PANEL ASSY	TMA	S9
162	75746701	CAPACITOR BRACKET	TMA	S3
164	77836055	LABEL	TMA	S3
168	77594704	OPT TRACK SENSE ASSY	TMA	S3
168	77594704	OPT TRACK SENSE ASSY	TMA	S8
170	83401808	FRONT PANEL ASSY	TMA	S3
170	83401808	FRONT PANEL ASSY	TMA	S9
171	83402101	CONE ASM	101 115	S5
172	75273200	BUSHING	101 115	S5
173	75747202	SOLENOID	101 115	S5
174	77834331	EXTENSION ARMATURE	101 115	S5
175	77834326	BAIL ARMATURE	101 115	S5
176	75885163	PUSH ROD ASSY	101 115	S5
177	75882711	CARRIAGE STOP KIT	137 138	S6
178	10125801	WASHERS SPR LOCK	101 115	S4
178	10125801	WASHERS SPR LOCK	101 115	S5
178	10125801	WASHERS SPR LOCK	161	S9
178	10125801	WASHERS SPR LOCK	131-136	S9
179	77830732	FOAM PAD	101 115	S5
180	75293203	BELT-FLAT	101 115	S4
181	75292609	SPRING-COMPRESSION	101 115	S5
182	75292617	SPRING-COMPRESSION	101 115	S5
183	75774732	CLIP-PUSH IN	101 115	S4
184	75774736	CLIP-PUSH IN	101 115	S4
186	10125803	WASHERS SPR LOCK	101 115	S4
186	10125803	WASHERS SPR LOCK	101 115	S5
186	10125803	WASHERS SPR LOCK	156	S8
188	77832145	LABEL IDENT	101 115	S4
189	77835200	WASHER, NYLON	101 115	S5
190	94217702	NUT-SELF LOCK, STL 8	101 115	S4
191	92073022	BEARING FLANGED	101 115	S4
191	92073022	BEARING FLANGED	171	S5
192	93529005	WASHER-SPRING WAVE	101 115	S4
193	92033037	RING RETAINING	101 115	S5
194	92033038	RETAINING RING	101 171	S5
194	92033038	RETAINING RING	115	S5
195	83426624	PANEL FRONT FIN BLK	132	S9
196	16402506	CLAMP CABLE	101 115	S4
197	09000005	SCREW BIND HEAD	101 115	S5
198	09000202	SCREW BIND HEAD	101 115	S5
199	09000403	SCREW BIND HEAD	101 115	S4
200	09000504	SCREW BIND HEAD	101 115	S5
201	10126219	SCR HEX SOC HD CAP	101 115	S5
202	10126222	SCREW HEX SOC HD	101 115	S4
203	93592162	SCR HX WASHER SLF TA	131-136	S9
203	93592162	SCR HX WASHER SLF TA	161	S9
205	93592086	SCR HEX SELF TAP	101 115	S4
205	93592086	SCR HEX SELF TAP	101 115	S5
206	83413408	SCREW-SELF LOCKING	101 115	S5
207	83411202	BUMPER DOOR	101 115	S5
208	92602003	CLAMP, CABLE-NYLON	101 115	S4
209	10126214	SCR HEX SOC HD CAP	101 115	S4
210	83427900	PLATE-NUT	101 115	S4
211	83426626	PANEL FRONT FIN BLU	170	S9
212	75806503	FLAT WASHER	101 115	S5
213	24548313	WIRE ELEC	127	S8
214	24548311	WIRE ELEC	127	S8
215	75812126	DOOR FINISHED BLU	170	S9
216	93592080	SCR HEX WSR HD	131-136	S9
216	93592080	SCR HEX WSR HD	161	S9
217	75884657	LEAF SPRING	131-136	S9
217	75884657	LEAF SPRING	161	S9
218	75882450	CARRIAGE STOP	101 115	S4
219	93592488	SCREW	101 115	S4
220	77833503	MOTOR PULLEY ASSY	111	S7
221	77833504	MOTOR PULLEY ASSY	103	S7
222	77833519	MOTOR PULLEY ASSY	107	S7
223	77833520	MOTOR PULLEY ASSY	105	S7
224	77833507	MOTOR PULLEY ASSY	106	S7
225	77833535	MOTOR PULLEY ASSY	109	S7
226	77833502	MOTOR PULLEY ASSY	102	S7
227	77833501	MOTOR PULLEY ASSY	124	S7
228	77833506	MOTOR PULLEY ASSY	104	S7
229	77833527	MOTOR PULLEY ASSY	108	S7
230	77833525	MOTOR PULLEY ASSY	109	S7
231	75790000	CAUTION LABEL	137 138	S6
231	75790000	CAUTION LABEL	124 139	S7
231	75790000	CAUTION LABEL	102-107	S7
231	75790000	CAUTION LABEL	111 112	S7
231	75790000	CAUTION LABEL	113	S7
233	77833532	MOTOR PULLEY ASSY	108	S7
234	83435402	CONNECTOR	102-110	S7
234	83435402	CONNECTOR	113 114	S7
234	83435402	CONNECTOR	111 112	S7
234	83435402	CONNECTOR	128 139	S7
236	83435501	CONTACT PIN	102-128	S7
236	83435501	CONTACT PIN	139	S7
237	93541002	TERMINAL	127	S8
238	51797233	TERMINAL	102-128	S7
238	51797233	TERMINAL	114 139	S7
239	62121108	TERMINAL	108-110	S7
239	62121108	TERMINAL	114 128	S7
239	62121108	TERMINAL	139	S7
240	15003254	WIRE (YELLOW)	102-128	S7
240	15003254	WIRE (YELLOW)	129 130	S7
240	15003254	WIRE (YELLOW)	114 139	S7
241	15003309	WIRE	106-110	S7
241	15003309	WIRE	114 128	S7
241	15003309	WIRE	139	S7
242	75738478	CAPACITOR	110 114	S7
242	75738478	CAPACITOR	139	S7
243	75738421	CAPACITOR	109	S7
243	75738421	CAPACITOR	114 128	S7
243	75738421	CAPACITOR	108	S7
244	75772500	CAPACITOR BOOT	108-110	S7
244	75772500	CAPACITOR BOOT	114 128	S7
244	75772500	CAPACITOR BOOT	139	S7
245	77835131	SOLENOID BRKT	295	S9
246	77834212	SOLENOID	295	S9
247	93530103	PIN ROLL	295	S9
248	75806507	WASHER	295	S9
249	77834323	SPRING	295	S9
250	93592482	SCR HEX HD	101 115	S5
251	77832458	OPTICAL SWITCH	125 127	S8
252	75293954	CONNECTOR	125	S8
252	75293954	CONNECTOR	168	S8
253	94245602	CONTACT	125 127	S8
253	94245602	CONTACT	168	S8
254	10125759	SCREW FLAT HD	168	S8
255	10127131	SCREW	152	S4
256	10125805	LOCK WASHER	152	S4
257	83460400	HOLDER PAD	326	S6
258	93592164	SCR HX SELF TAP	125	S8

Top-Down Assembly/Component Parts List (Cont.)

ITEM	IDENT NO	DESCRIPTION	WHERE USED	SH
258	93592164	SCR HX SELF TAP	127	S8
259	77835305	LABEL	168	S8
260	75791600	MOUNT	147	S8
261	75724402	SWITCH	147	S8
262	75293956	CONNECTOR	127	S8
263	83402301	LATCH-DOOR INJEC MOL	131-136	S9
264	77594403	MOUNT	168	S8
265	77834318	LEVER-DOOR	161	S9
266	92096099	PIN-GROOVED	131-136	S9
266	92096099	PIN-GROOVED	161	S9
267	75292700	KNOB-LEVER	132-136	S9
268	83401200	SPRING-LATCH	131-136	S9
268	83401200	SPRING-LATCH	161	S9
269	83413406	SCR SET SOC HD 6-32	131-136	S9
269	83413406	SCR SET SOC HD 6-32	161	S9
270	83413407	SCREW SET SOC HD 4	131-136	S9
270	83413407	SCREW SET SOC HD 4	161	S9
271	75292701	KNOB-LEVER	161	S9
272	83413404	SCREW-SELF LOCKING	131-136	S9
272	83413404	SCREW-SELF LOCKING	161	S9
273	83426621	PANEL FRONT, BLACK HW	133	S9
274	75812121	DOOR, FINISHED, PA-BLK	133	S9
275	83426622	PANEL FRONT, WHITE HW	134	S9
276	75812122	DOOR, FINISHED, PA-WHT	134	S9
277	83426623	PANEL FRONT, FIN BLUE	135	S9
278	75812123	DOOR, FINISHED, PA-BLU	135	S9
279	83461110	FRONT PANEL FINISHED	136	S9
280	75747801	STEPPER MOTOR ASM	137 138	S6
281	77839902	CARRIAGE ASM	137	S6
283	75881371	SHIM	131	S9
284	77594000	SPRING-CARRIAGE	137 138	S6
286	10126209	SCR-SOC HP CAP	281 318	S6
287	75812124	DOOR FINISHED BLACK	132 136	S9
287	75812124	DOOR FINISHED BLACK	161	S9
287	75812124	DOOR FINISHED BLACK	131	S9
288	75813000	RETAINER-BEARING	137 138	S6
289	92073020	BEARING FLANGED	137 138	S6
290	94217207	BRG BALL-EXT INNER R	137 138	S6
291	93529001	WASHER-SPRING WAVE	137 138	S6
292	83403202	BAR TORSION DOOR	131-136	S9
292	83403202	BAR TORSION DOOR	161	S9
293	83461111	FRONT PANEL	161	S9
294	77832456	LUBRICANT	137 138	S6
295	77835133	DOOR LK ASSY	161	S9
296	91976207	SCREW	161	S9
297	77833702	HARNESS DR LK	161	S9
298	75810703	DIODE LIGHT	161	S9
299	75810701	DIODE LIGHT	161	S9
300	83461200	LATCH DOOR	136	S9
301	77830975	ADAPTER	152	S4
302	83401500	BUSHING-DOOR INJECT	131-136	S9
302	83401500	BUSHING-DOOR INJECT	161	S9
303	75746000	LEVER-DOOR	136 132	S9
304	75746800	BRACKET LATCH	131-136	S9
304	75746800	BRACKET LATCH	161	S9
305	77833526	MOTOR PULLEY ASSY	110	S7
306	83460701	PAD HEAD LOAD	326	S6
307	77830550	SOLID STATE RELAY	156	S8
308	10127334	SCREW	156	S8
309	10125105	NUT	156	S8
310	75790803	SHAFT	171	S5
311	83426400	EXPANDER-CONE	171	S5
312	77830481	CONE-DISK LOAD	171	S5
313	83402200	SPRING CONE	171	S5
314	92033029	RETAINING RING	171	S5
315	83409701	SPRING-GARTER	171	S5
316	94047069	WASHER	171	S5
317	77835201	WASHER	171	S5
318	77839901	CARRIAGE ASSY	138	S6
319	77833505	MOTOR PULLEY ASSY	113	S7
320	75812011	SUPPORT DIE CAST MACHINED	368	S5
321	75292807	BEARING-CYLINDRICAL	368	S5
322	75813201	BUSHING, PUSH ROD MOLDED	368	S5
323	75813202	BUSHING, PUSH ROD MOLDED	368	S5
325	77603100	ARM-HEAD LOAD	281 318	S6
326	77830482	HOLDER-PAD ASSY	281 318	S6
327	10127321	SCR PAN HD	295	S9
329	77830998	PIN CARRIAGE	281 318	S6
330	77830999	SPRING TORSION	281 318	S6
331	94047068	WASHER, SPECIAL	281 318	S6
332	75889161	LATCH DOOR	161	S9
333	10127310	SCREW SLOTTED	281 318	S6
334	10125001	SCREW HEX HD	137 138	S6
335	94047000	WASHER	137 138	S6
336	93592160	SCREW, SELF TAP	TMA	S3
336	93592160	SCREW, SELF TAP	101 115	S4
337	93464000	WIRE BLACK	114 128	S7
338	83435511	CONTACT PIN	102-128	S7
338	83435511	CONTACT PIN	139	S7
339	10126401	STAR LOCK WASHER	101 115	S4
340	75731302	ELECTRICAL SYMBOL	101 115	S4
342	77594800	DECAL	152	S4
343	77833531	MOTOR PULLEY ASSY	110	S7
344	75724543	CONNECTOR PANEL MTG	124	S7
345	75724586	CONNECTOR PANEL MTG	124	S7
346	83426204	CARRIAGE HEAD ASSY	281	S6
347	93464555	WIRE 16 GRN	124	S7
348	75724587	CONTACT PIN	129 130	S7
349	51797214	LUG TERM RING CRIMP	129 130	S7
350	75724569	CONNECTOR PANEL MTG	129 130	S7
351	75724585	CONNECTOR PANEL MTG	129 130	S7
352	77833542	MOTOR PULLEY ASSY	139	S7
353	75724401	ACTUATOR SWITCH	101 115	S5
354	09000004	SCREW BIND HEAD	147	S8
355	75885407	OPTICAL SWITCH	168	S8
356	77833545	MOTOR PULLEY ASSY	139	S7
357	77832410	PANEL FRONT BLK-BURR	131	S9
358	83426205	CARRIAGE HEAD ASSY	318	S6
359	77830977	LATCH DOOR	131	S9
360	75886086	BASE-MECHANISM, DIE	101	S4
361	83403601	SPINDLE	101 115	S4
362	75747000	SPACER BEARING	101 115	S4
363	75745200	PULLEY-SPINDLE	101 115	S4
364	75886087	BASE-MECHANISM, DIE	115	S4
365	83461800	CLAMP, STEPPER MOTOR	101 115	S4
366	75292400	GUIDE-CARRIAGE	101 115	S4
368	75812021	SUPPORT-ASSEMBLED	101	S5
369	83402803	ARM-DISK LOAD	101	S5
370	75273000	PIN DISK LOAD ARM	101 115	S5
371	75881370	LEVER DOOR	131	S9
372	77832119	BUTTON LATCH	131	S9
373	77835304	LABEL	324 358	S6
374	94277400	TIE STRAP	125 127	S8
375	83427303	NUT CARRIAGE	137 138	S6
376	75812022	SUPPORT-ASSEMBLED	115	S5
377	93592486	SCREW	101 115	S4
378	95862300	ANCHOR CABLE TIE	161	S9
379	77835132	SPACER BKT	295	S9
380	77833526	MOTOR PULLEY ASSY	128	S7
381	77833531	MOTOR PULLEY ASSY	128	S7
382	77833525	MOTOR PULLEY ASSY	129	S7
383	77833535	MOTOR PULLEY ASSY	129	S7
384	77833527	MOTOR PULLEY ASSY	130	S7
385	77833532	MOTOR PULLEY ASSY	130	S7
386	10125102	SCR NUT HEX	168	S8
387	10126100	WASH INT TOOTH LK	168	S8
388	10125603	WASHER	101 115	S4
388	10125603	WASHER	101 115	S5
389	83402804	ARM-DISK LOAD	115	S5
390	77833529	MOTOR PULLEY ASSY	114	S7
391	77833534	MOTOR PULLEY ASSY	114	S7

IDENTIFICATION CODE NUMBER	SERVICE CODE NUMBER	DESCRIPTION
SA 120-1	5322 395 84062	CE-DISKETTE
SA125	5322 395 34029	DIAGNOSTIC DISKETTE
09000004-3	5322 502 24555	SCREW BIND HEAD
09000005-0	5322 503 44234	SCREW,2-56X3/8"
09000202-3	5322 503 40037	SCREW,4-40X3/16"
09000403-7	5322 503 40068	SCREW,6-32X1/4"
09000504-2	5322 503 40051	SCREW,8-32X3/12"
10125001-7	5322 503 44255	SCREW HX HD
10125602-2	5322 532 14461	WASHER,PLAIN,NO.2
10125603-0	4822 532 10636	WASHER,PLAIN,NO.4
10125801-0	4822 530 80173	WASHER,SPRINGL.NO.4
10125803-6	4822 530 80163	WASHER,SPRINGL.NO.6
10126209-5	5322 503 44256	SCREW SOC HP CAP
10126214-5	5322 503 40033	SCREW,HEX.4-40X1/2"
10126218-6	5322 503 40043	SCREW,HEX.6-32X3/8"
10126222-8	5322 503 40046	SCREW.HEX.6-32X5/8"
10127310-0	5322 503 44257	SCREW,SLOTTED
15104301-5	5322 209 84671	IC 9602MV
15105000-2	5322 209 84023	IC TTL DM/74107
15126900-8	5322 209 85804	IC DVA /MUA733
15158300-2	5322 209 84285	IC 7438N
15161100-1	5322 209 85663	IC 78M12
15161300-7	5322 209 84171	IC SN7405N
15161600-0	5322 209 85928	IC 75461RC DRIVER
15161800-6	5322 209 85761	IC LM319N
15163100-9	5322 209 85025	IC MC1733CLD(733)
39389700-4	5322 209 80148	IC 7404N TTL
50254200-4	5322 209 84073	IC 7406N
50254500-7	5322 209 84811	IC 75154
5111 010 03911	5322 691 64315	FDD BR8A5B DOORLOCK
5112 291 34560	5322 218 74438	DRIVE 50/60HZ DD
5112 291 34620	5322 395 34027	FDD 50/60HZ SD
5112 291 39510	5322 218 74479	FDD BR8A2M
51651900-6	5322 209 85929	IC TTL4 (9002F)
51736700-9	5322 130 34502	DIODE 1N914A
56142000-1	5322 130 34574	DIODE SILICON IN4820
66299099-3	5322 209 84528	IC SN7400N
66299100-9	5322 209 80077	IC 7410N
75273000-2	5322 535 94832	PIN,DISKLOADARM
75273200-8	5322 532 54366	BUSHING
75291923-3	5322 361 84198	DRIVEMOTOR ASSY
75291928-2	5322 361 84213	DRIVE MOTOR ASM
75292001	5322 395 84062	ACT ALIGNMENT TOOL
75292400-1	5322 535 94833	GUIDE,CARRIAGE
75292609-7	5322 492 54271	SPRING,COMPRESSION
75292610-5	5322 492 54272	SPRING,COMPRESSION
75292700-4	5322 414 64085	KNOB,LEVER
75292701-2	5322 414 64097	KNOB-LEVER
75293203-8	5322 358 24104	BELTMFLAT
75720001	5322 130 34636	LAMP,SOLID STATE
75720002	5322 130 44644	PHOTOTRANSISTOR
75722700-4	5322 130 44762	TRANS D.NPN/MD 708B
75724401	5322 271 34183	ACTUATOR SWITCH
75724402-5	5322 271 34051	SWITCH,SUBMINIATURE
75738421-9	5322 124 74123	CAPACITOR
75738478-9	5322 124 24195	CAPACITOR
75745800-5	5322 405 46187	BAIL,ARMATURE
75745900-3	5322 405 46188	EXTENSION,ARMATURE
75746000-1	5322 466 85638	LEVER,DOOR
75746800-4	5322 405 46189	BRACKET.LATCH
75747000-0	5322 520 34193	BEARING,SPACER
75747100	5322 405 46215	MOUNT,L.E.D
75747202-2	5322 281 14057	SOLENOID,CLAPPER
75747301	5322 405 46247	UPPER HARNESS ASM
75747904-3	5322 361 84214	DRIVE MOTOR ASM
75747917-5	5322 361 84204	DR MOTOR ASM 50/60HZ
75772500-7	5322 462 44348	CAPACITOR BOOT
75774732-4	5322 361 24121	CLIP,PUSH-IN(NYLON)
75774736-5	5322 535 74516	CLIP,PUSH-IN(NYLON)
75791508	5322 691 64307	ACTUATOR ASSY
75810701-1	5322 130 34753	DIODE LIGHT
75810703-1	5322 255 44244	DIODE LIGHT HOLDER
75812124-8	5322 447 84675	DOOR,PAINTED.STD.BL.
75812701	5322 405 46216	MOUNT,PHOTOTRANSIST.
75813300-3	5322 535 94864	ROD,PUSH
75813401-9	5322 535 94864	PLUNGER,PUSHERROD
75881706-8	5322 216 25268	COMPONENTBOARD ASSY
75881950	5322 216 25306	PCB
75882450-2	5322 466 85761	CARRIAGE STOP
75884657-0	5322 492 64671	LEAF SPRING
75885163-8	5322 535 94864	PUSH ROD ASSY
75890500	5322 216 25268	COMPONENT BOARD ASSY
75890650	5322 216 25307	PCB
75890750	5322 216 25267	COMPONENT BOARD ASSY
77594000-0	5322 492 54274	SPRING CARRIAGE
77603100-7	5322 405 46191	ARM-HEAD LOAD
77603501-6	5322 528 24103	STOP CARRIAGE
77830308-1	5322 401 14246	LEAF,ACTUATOR
77830482-4	5322 256 94135	HOLDER PAD ASSY
77830732-2	5322 466 94505	FOAM,PAD
77830998-9	5322 535 34052	PIN.CARRIAGE
77830999-7	5322 492 44191	SPRING,TORSION
77832315-4	5322 209 85931	IC 3086
77832395-6	5322 532 14645	WASHER SPRING WAVE
77832438-4	5322 506 44039	NUT,SELFTHD.
77832458-2	5322 218 74435	OPTICAL SWITCH
77833702-2	5322 255 44243	HARNESS DR.LK
77834318-6	5322 405 46295	LEVER-DOOR
77835133-8	5322 417 54011	DOOR LOCK ASSY
77835186-6	5322 130 40621	TRANSISTOR 2N2907A
77835201	5322 532 14614	WASHER NYLON
77836043-8	5322 130 44529	TRANSISTOR T1P120
77836044-6	5322 130 44763	TRANSISTOR T1P125
83401000-1	5322 535 94864	CAP,PUSHROD
83401200-7	5322 492 54273	SPRING,LATCH
83401300	5322 395 84058	OUTER STOP GAUGE
83401400	5322 395 84059	INNER STOP GAUGE
83401500-0	5322 532 64222	BUSHING,DOOR,MOLDED.
83401600-8	5322 492 54274	SPRING,CARRIAGE
83401700-6	5322 462 34158	RAIL,DISK,INJECTION
83402101-6	5322 691 64294	CONE,ASSY
83402200-6	5322 492 54275	SPRING,CONE
83402300-4	5322 532 34104	LATCH,DOOR,MOLDED
83402301	5322 532 34104	LATCH DOOR INJEC MOL
83403202-1	5322 492 54276	BAR,TORSION,DOOR
83403502	5322 405 46248	LOWER HARNESS ASM
83403601-4	5322 528 94204	SPINDLE
83409701-6	5322 492 64597	SPRING,GARTER
83411202-1	5322 462 34159	BUMPER,DOOR
83413403-3	5322 503 44258	SCREW,SELF,LOCK
83413404-1	5322 503 44259	SCREW,SELF,LOCK
83413406-6	5322 503 44261	SCREW,SET,HD6-32
83413407-4	5322 503 44262	SCREW,SET,HD4-4
83426624-9	5322 447 84676	PANEL,FRONT(STD.BLK)
83427000-1	5322 503 44263	SCREW,HEX.HD.
83427301-3	5322 505 14251	NUT CARRIAGE INJ MOC
83427B01-2	5322 218 74435	WRITE PROTECT ASM
83427900-2	5322 505 14252	PLATE,NUT
83435402-9	5322 268 34029	CONNECTOR
83435501-8	5322 268 14102	CONTACTPIN
83435511-7	5322 268 14103	CONTACTPIN
83452205-4	5322 270 14005	SWITCH-8 POSITION
83452207-0	5322 270 14006	SWITCH-10POSITION
83452209-6	5322 270 14007	SWITCH-12POSITION
83453600-5	5322 218 74422	OPTICALSWITCH
83461111-3	5322 447 84782	FRONT PANEL
83461200-4	5322 535 94888	LATCH-DOOR
83461B00-1	5322 405 46192	CLAMP,STEPPERMOTOR
88885700-0	5322 209 84201	IC 7486N TTL
88897000-1	5322 209 80158	IC 7408N TTL
88924500-7	5322 209 80148	IC 7404N
91976207-0	5322 503 44327	SCREW
92033029-7	5322 530 74098	RETAININGRING
92033037-0	5322 530 74099	RING,RETAINING
92033038-8	5322 530 74101	RING,RETAINING
92073020-7	5322 520 24168	BEARING,FLANGED
92073022-3	5322 520 24169	BEARING,FLANGED
92096099-4	5322 535 94835	PIN,GROOVED
9331 760 00112	5322 209 84528	IC SN7400N
9331 760 40112	5322 209 80077	IC 7410N
9331 761 00112	5322 209 84165	IC 7474N TTL
9331 761 20112	5322 209 80234	IC N7402N
9332 414 10112	5322 209 80148	IC 7404N TTL
9332 414 20112	5322 209 84171	IC SN7405N
9332 414 30112	5322 209 80151	IC 7408N TTL
9332 414 60112	5322 209 84285	IC 7438N
9332 414 70112	5322 209 84201	IC 7486N TTL
9332 830 60112	5322 209 84073	IC 7406N
9333 132 20112	5322 209 85804	IC MUA 733
9334 005 80112	5322 209 85761	IC LM319
93529001-5	5322 532 54367	WASHER,SPRING WAVE
93529005-6	5322 530 84089	WASHER,SPRING WAVE
93564002-9	5322 532 54368	WASHER,NYLON
93592080-1	5322 503 44328	SCR HEX WSR HD
93592086-8	5322 503 44264	SCREW,HEX,WASHER
93592162-7	5322 503 44265	SCREW,HEX,WASHER
93592164-3	5322 500 14241	SCR HX SELF TAP
93592240-1	5322 503 44266	SCREW,WASHER
93592486-0	5322 503 44329	SCREW
93592488-6	5322 503 44245	SCREW
94047000-8	5322 532 54369	WASHER
94047068-5	5322 532 14646	WASHER SPECIAL
94047069-3	5322 532 14613	WASHER
94047070-1	5322 532 14614	SPACER
94217207-3	5322 520 24171	BEARING BALL
94217702-3	5322 506 44041	NUT,SELF,LOCK,8-32
94260301-0	5322 255 44185	SOCKET IC 16 PIN
94616400-1	4822 130 30829	DIODE
95794600-7	5322 209 85556	IC LM339N
95894500-8	5322 111 94134	RES PAC 220/330

SERVICE CODE NUMBER	IDENTIFICATION CODE NUMBER	DESCRIPTION
4822 130 30829	94616400-1	DIODE
4822 530 80163	10125803-6	WASHER,SPRINGL.NO.6
4822 530 80173	10125801-0	WASHER,SPRINGL.NO.4
4822 532 10636	10125603-0	WASHER,PLAIN,NO.4
5322 111 94134	95894500-8	RES PAC 220/330
5322 124 24195	75738478-9	CAPACITOR
5322 124 74123	75738421-9	CAPACITOR
5322 130 34502	51736700-9	DIODE 1N914A
5322 130 34574	56142000-1	DIODE SILICON IN4820
5322 130 34636	75720001	LAMP,SOLID STATE
5322 130 34753	75810701-1	DIODE LIGHT
5322 130 40621	77835186-6	TRANSISTOR 2N2907A
5322 130 44529	77836043-8	TRANSISTOR T1P120
5322 130 44644	75720002	PHOTOTRANSISTOR
5322 130 44762	75722700-4	TRANS D.NPN/MD 708B
5322 130 44763	77836044-6	TRANSISTOR T1P125
5322 209 80077	66299100-9	IC 7410N
5322 209 80148	39389700-4	IC 7404N TTL
5322 209 80151	9332 414 30112	IC 7408N TTL
5322 209 80158	88897000-1	IC 7408N TTL
5322 209 80234	9331 761 20112	IC N7402N
5322 209 84023	15105000-2	IC TTL DM/74107
5322 209 84073	50254200-4	IC 7406N
5322 209 84165	9331 761 00112	IC 7474N TTL
5322 209 84171	15161300-7	IC SN7405N
5322 209 84201	88885700-0	IC 7486N TTL
5322 209 84285	15158300-2	IC 7438N
5322 209 84528	66299099-3	IC SN7400N
5322 209 84671	15104301-5	IC 9602MV
5322 209 84811	50254500-7	IC 75154
5322 209 85025	15163100-9	IC MC1733CLD(733)
5322 209 85556	95794600-7	IC LM339N
5322 209 85663	15161100-1	IC 78M12
5322 209 85761	15161800-6	IC LM319N
5322 209 85804	15126900-8	IC DVA /MUA733
5322 209 85928	15161600-0	IC 75461RC DRIVER
5322 209 85929	51651900-6	IC TTL4 (9002F)
5322 209 85931	77832315-4	IC 3086
5322 216 25267	75890750	COMPONENT BOARD ASSY
5322 216 25268	75881706-8	COMPONENTBOARD ASSY
5322 216 25306	75881950	PCB
5322 216 25307	75890650	PCB
5322 218 74422	83453600-5	OPTICALSWITCH
5322 218 74435	77832458-2	OPTICAL SWITCH
5322 218 74438	5112 291 34560	DRIVE 50/60HZ DD
5322 218 74479	5112 291 39510	FDD BR8A2M
5322 255 44185	94260301-0	SOCKET IC 16 PIN
5322 255 44243	77833702-2	HARNESS DR.LK
5322 255 44244	75810703-1	DIODE LIGHT HOLDER
5322 256 94135	77830482-4	HOLDER PAD ASSY
5322 268 14102	83435501-8	CONTACTPIN
5322 268 14103	83435511-7	CONTACTPIN
5322 268 34029	83435402-9	CONNECTOR
5322 270 14005	83452205-4	SWITCH-8 POSITION
5322 270 14006	83452207-0	SWITCH-10POSITION
5322 270 14007	83452209-6	SWITCH-12POSITION
5322 271 34051	75724402-5	SWITCH,SUBMINIATURE
5322 271 34183	75724401	ACTUATOR SWITCH
5322 281 14057	75747202-2	SOLENOID,CLAPPER
5322 358 24104	75293203-8	BELTMFLAT
5322 361 24121	75774732-4	CLIP,PUSH-IN(NYLON)
5322 361 84198	75291923-3	DRIVEMOTOR ASSY
5322 361 84204	75747917-5	DR MOTOR ASM 50/60HZ
5322 361 84213	75291928-2	DRIVE MOTOR ASM
5322 361 84214	75747904-3	DRIVE MOTOR ASM
5322 395 34027	5112 291 34620	FDD 50/60HZ SD
5322 395 34029	SA125	DIAGNOSTIC DISKETTE
5322 395 84058	83401300	OUTER STOP GAUGE
5322 395 84059	83401400	INNER STOP GAUGE
5322 395 84062	SA 120-1	CE-DISKETTE
5322 401 14246	77830308-1	LEAF,ACTUATOR
5322 405 46187	75745800-5	BAIL,ARMATURE
5322 405 46188	75745900-3	EXTENSION,ARMATURE
5322 405 46189	75746800-4	BRACKET,LATCH
5322 405 46191	77603100-7	ARM-HEAD LOAD
5322 405 46192	83461800-1	CLAMP,STEPPERMOTOR
5322 405 46215	75747100	MOUNT,L.E.D
5322 405 46216	75812701	MOUNT,PHOTOTRANSIST.
5322 405 46247	75747301	UPPER HARNESS ASM
5322 405 46248	83403502	LOWER HARNESS ASM
5322 405 46295	77834318-6	LEVER-DOOR
5322 414 64085	75292700-4	KNOB,LEVER
5322 414 64097	75292701-2	KNOB-LEVER
5322 417 54011	77835133-8	DOOR LOCK ASSY
5322 447 84675	75812124-8	DOOR,PAINTED.STD.BL.
5322 447 84676	83426624-9	PANEL,FRONT(STD.BLK)
5322 447 84782	83461111-3	FRONT PANEL
5322 462 34158	83401700-6	RAIL,DISK,INJECTION
5322 462 34159	83411202-1	BUMPER,DOOR
5322 462 44348	75772500-7	CAPACITOR BOOT
5322 466 85638	75746000-1	LEVER,DOOR
5322 466 85761	75882450-2	CARRIAGE STOP
5322 466 94505	77830732-2	FOAM,PAD
5322 492 44191	77830999-7	SPRING,TORSION
5322 492 54271	75292609-7	SPRING,COMPRESSION
5322 492 54272	75292610-5	SPRING,COMPRESSION
5322 492 54273	83401200-7	SPRING,LATCH
5322 492 54274	77594000-0	SPRING CARRIAGE
5322 492 54275	83402200-6	SPRING,CONE
5322 492 54276	83403202-1	BAR,TORSION,DOOR
5322 492 64597	83409701-6	SPRING,GARTER
5322 492 64671	75884657-0	LEAF SPRING
5322 500 14241	93592164-3	SCR HX SELF TAP
5322 502 24555	09000004-3	SCREW BIND HEAD
5322 503 40033	10126214-5	SCREW,HEX.4-40X1/2"
5322 503 40037	09000202-3	SCREW,4-40X3/16"
5322 503 40043	10126218-6	SCREW,HEX.6-32X3/8"
5322 503 40046	10126222-8	SCREW.HEX.6-32X5/8"
5322 503 40051	09000504-2	SCREW,8-32X3/12"
5322 503 40068	09000403-7	SCREW,6-32X1/4"
5322 503 44234	09000005-0	SCREW,2-56X3/8"
5322 503 44245	93592488-6	SCREW
5322 503 44255	10125001-7	SCREW HX HD
5322 503 44256	10126209-5	SCREW SOC HP CAP
5322 503 44257	10127310-0	SCREW,SLOTTED
5322 503 44258	83413403-3	SCREW,SELF,LOCK
5322 503 44259	83413404-1	SCREW,SELF,LOCK
5322 503 44261	83413406-6	SCREW,SET,HD6-32
5322 503 44262	83413407-4	SCREW,SET,HD4-4
5322 503 44263	83427000-1	SCREW,HEX.HD.
5322 503 44264	93592086-8	SCREW,HEX,WASHER
5322 503 44265	93592162-7	SCREW,HEX,WASHER
5322 503 44266	93592240-1	SCREW,WASHER
5322 503 44327	91976207-0	SCREW
5322 503 44328	93592080-1	SCR HEX WSR HD
5322 503 44329	93592486-0	SCREW
5322 505 14251	83427301-3	NUT CARRIAGE INJ MOC
5322 505 14252	83427900-2	PLATE,NUT
5322 506 44039	77832438-4	NUT,SELFTHD.
5322 506 44041	94217702-3	NUT,SELF,LOCK,8-32
5322 520 24168	92073020-7	BEARING,FLANGED
5322 520 24169	92073022-3	BEARING,FLANGED
5322 520 24171	94217207-3	BEARING BALL
5322 520 34193	75747000-0	BEARING,SPACER
5322 528 24103	77603501-6	STOP CARRIAGE
5322 528 94204	83403601-4	SPINDLE
5322 530 74098	92033029-7	RETAININGRING
5322 530 74099	92033037-0	RING,RETAINING
5322 530 74101	92033038-8	RING,RETAINING
5322 530 84089	93529005-6	WASHER,SPRING WAVE
5322 532 14461	10125602-2	WASHER,PLAIN,NO.2
5322 532 14613	94047069-3	WASHER
5322 532 14614	77835201	WASHER NYLON
5322 532 14645	77832395-6	WASHER SPRING WAVE
5322 532 14646	94047068-5	WASHER SPECIAL
5322 532 34104	83402300-4	LATCH,DOOR,MOLDED
5322 532 54366	75273200-8	BUSHING
5322 532 54367	93529001-5	WASHER,SPRING WAVE
5322 532 54368	93564002-9	WASHER,NYLON
5322 532 54369	94047000-8	WASHER
5322 532 64222	83401500-0	BUSHING,DOOR,MOLDED.
5322 535 34052	77830998-9	PIN.CARRIAGE
5322 535 74516	75774736-5	CLIP,PUSH-IN(NYLON)
5322 535 94832	75273000-2	PIN,DISKLOADARM
5322 535 94833	75292400-1	GUIDE,CARRIAGE
5322 535 94835	92096099-4	PIN,GROOVED
5322 535 94864	75813300-3	ROD,PUSH
5322 535 94888	83461200-4	LATCH-DOOR
5322 691 64294	83402101-6	CONE,ASSY
5322 691 64307	75791508	ACTUATOR ASSY

9.1 INTRODUCTION

The following paragraphs contain the wire lists for the Upper Harness Assembly, Lower Harness Assembly and the Stepper Motor.

9.2 UPPER HARNESS ASSEMBLIES

Wire Color	Origin	Destination	Approximate Length Inches
Red	Solenoid-A	J5-5	11.0" (279.4mm)
Black	Solenoid-B	J5-2	11.0" (279.4mm)
Orange	Interlock Common	J5-6	13.5" (342.9mm)
White	Interlock N.O.	J5-4	13.5" (342.9mm)
Blue	LED Cathode	J5-1	13.5" (342.9mm)
Yellow	LED Anode	J5-3	13.5" (342.9mm)

9.3 LOWER HARNESS ASSEMBLY

Wire Color	Origin	Destination	Approximate Length Inches
Black	Track 0 Common	J3-5	20.0" (508.0mm)
Red	Track 0 N.C.	J3-3	20.0" (508.0mm)
White	Track 0 N.O.	J3-2	20.0" (508.0mm)
Blue	Photo Transistor Emitter	J3-4	9.0" (228.6mm)
Yellow	Photo Transistor Collector	J3-1	9.0" (228.6mm)

9.4 STEPPER MOTOR

Wire Color	Origin	Destination	Approximate Length Inches
Brown	Stepper Motor	J4-1	13.0" (330.2mm)
Red	Stepper Motor	J4-2	13.0" (330.2mm)
Orange	Stepper Motor	J4-3	13.0" (330.2mm)
Black	Stepper Motor	J4-4	13.0" (330.2mm)

9.5 WRITE PROTECT

Wire Color	Origin	Destination	Approximate Length Inches
Blue	LED Cathode	J6-1	20.0" (508.0mm)
Red	Phototransistor Collector	J6-2	20.0" (508.0mm)
Green	LED Anode	J6-3	20.0" (508.0mm)
White	Phototransistor Emitter	J6-4	20.0" (508.0mm)