

Data
Systems

PHILIPS

Field Support Manual
Flexible Disc Drive
P3431
P830-006

A PUBLICATION OF
PHILIPS DATA SYSTEMS
APELDOORN, THE NETHERLANDS

PUB. NO. 5122 991 28145

DATE March 1982

Great care has been taken to ensure that the information contained in this handbook is accurate and complete. Should any errors or omissions be discovered, however, or should any user wish to make a suggestion for improving this handbook, he is invited to send the relevant details to:

PHILIPS DATA SYSTEMS
SERV. DOC. AND TRAINING DEPT.
P.O. Box 245, APELDOORN,
THE NETHERLANDS.

Copyright © by PHILIPS DATA SYSTEMS.
All rights strictly reserved. Reproduction or issue to third parties in any form whatever is not permitted without written authority from the publisher.

SERVICE MANUAL STATUS RECORD

TITLE : FLEXIBLE DISC DRIVE
P3431, P830-006

PUBLICATION NUMBER : 5122 991 28144

PUB. NO. 12th digit	UPDATE PACKAGE	SI. NO.	PAGES AFFECTED	DATE	REMARKS
4				7905	
		Incl. P830-P-001, P3431-011	p. 6-19, 8-5	8203	Revision Record CDC, Revision N, is not correct. Revision N covers: Ch 1 - level J 2 - level A 3 - level A 4 - level J 5 - level N 6 - level J 7 - level A 8 - level M 9 - level A

REVISION RECORD

REV	DATE	TABLE OF CONTENTS SHEETS AFFECTED	MANUAL/SECTION REVISION STATUS												CHANGE AUTHORITY
			1	2	3	4	5	6	7	8	9	10	11	12	
A	78 FEB ISSUE 15		A	A	A	A	A	A	A	C	A				P. Magdeburger
B	78 MAR 3	ii, vi, viii	A	A	A	A	A	B	A	D	A				PL21025
C	78 PS MAY 2	ii	C	A	A	A	A	C	A	E	A				PL 21050
D		ii	C	A	A	A	A	C	A	F	A				PL 21062
E	78 PS. Oct 9	ii	C	A	A	E	E	C	A	F	A				PL 21083
F	78 PS. oct 25	ii	C	A	A	E	F	C	A	F	A				PL 21099
G	79 PS JAN 31	ii	C	A	A	E	F	C	A	G	A				PL 21126
H	79 Feb 14	ii	C	A	A	E	H	H	A	H	A				PL 21129
J	79 PS MAR 27	ii	D	A	A	F	H	J	A	H	A				PL 21141
K	79 PS APR 9	ii	D	A	A	F	H	J	A	J	A				PL 21150
L	79 PS Dec 13	ii and vii	D	A	A	F	H	J	A	L	A				PL 21210
M	80 DEC 9 S. Wong	ii, iii, v	D	A	A	F	H	J	A	L	A				PL 21262
N	81 MAY 20 S.W.	ii	D	A	A	F	N	J	A	L	A				PL 21289

Address comments concerning this manual to:

Technical Publications
Magnetic Peripherals Inc.

or use the enclosed user comment sheet.

© 1977, 1978, 1979, 1980, 1981
Magnetic Peripherals Inc.

Printed in the United States of America
All Rights Reserved

PREFACE

This manual provides the information needed to install, operate and maintain the Control Data Corporation Flexible Disk Drive (FDD) and is intended to support customer engineers who require detailed information about the Flexible Disk Drive's operation.

The total content of the manual is comprised of two publications, each having a unique publication number, and is contained in one volume. The Manual's publication number (75888337) is that of the front matter, sections one through seven, and section nine. This number should be used when making reference to the Flexible Disk Drive Hardware Reference Maintenance Manual. Section VIII, Parts Data, is identified by the unique publication number 77834771.

This manual applies to several models of the FDD. A configurator sheet is provided on the following page which describes each FDD configuration that this manual will support. Refer to the equipment nameplate located on the right hand side of the unit (as viewed from the front) to determine the appropriate Top Mechanical Assembly (TMA) and Model numbers. Then use the Configurator sheet as a starting point to establish the maintenance level for the device.

EMI NOTICE

NOTICE: This equipment has been designed as a component to high standards of design and construction. The product, however, must depend on receiving adequate power and environment from its host equipment in order to obtain optimum operation and to comply with applicable industry and governmental regulations. Special attention must be given by the host manufacturers in the areas of safety, power distribution, grounding, shielding, audible noise control, and temperature regulation of the device to insure specified performance and compliance with all applicable regulations. This equipment is a component supplied without its final enclosure and therefore is not subject to standards imposed by FCC Rules for Electro-Magnetic Interference (EMI). Federal Docket 20780/FCC 80-148 Part 15.

FLEXIBLE DISK DRIVE CONFIGUATOR SHEET

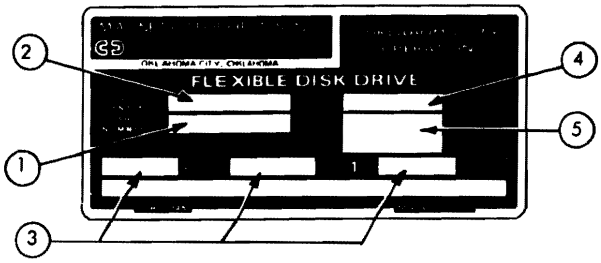

1. TOP MECHANICAL ASSEMBLY NO. (TMA)
2. MODEL NO. (BR8XXX)
3. AC POWER REQUIRED (ON UNITS LABELED 50/60 Hz CHECK CONFIGURATION OF PULLEY FOR FREQUENCY).
4. EQUIPMENT STATUS NUMBER
5. UNIT SERIAL NO.

POWER REQ												
	VDC	+5 & +24 AT J7										
		+5 & +24 AT I/O J1										
	VAC	240, 1Ø										
		220, 1Ø										
		120 1Ø										
		100 1Ø										
WRITE SPLICE ADJ. (See Table 6-2)												
CIRCUIT BD. CONFIG. (See Table 5-1)												
DAISY-CHAIN INTERFACE												
STANDARD INTERFACE												
TMA NO.	MODEL NO.											
75744040	BR8A2M		X	505	603				X		X	

X294a

TABLE OF CONTENTS

SECTION			PAGE
	EMI NOTICE		iii
I	GENERAL DESCRIPTION		
	1.1	INTRODUCTION	1-1
	1.2	PURPOSE AND USE OF EQUIPMENT	1-1
	1.3	PRODUCT DESCRIPTION	1-1
	1.3.1	Physical Description	1-2
	1.3.2	Electrical Description	1-2
	1.3.3	Performance Characteristics	1-2
II	OPERATION		
	2.1	INTRODUCTION	2-1
	2.2	OPERATING INSTRUCTIONS	2-1
	2.2.1	Flexible Diskette Loading	2-1
	2.2.2	Flexible Diskette Removal	2-1
	2.3	ERROR RECOVERY	2-1
	2.3.1	Seek Error	2-1
	2.3.2	Write Error	2-1
	2.3.3	Read Error	2-2
	2.4	DISKETTE HANDLING RECOMMENDATIONS	2-2
III	INSTALLATION AND CHECKOUT		
	3.1	INTRODUCTION	3-1
	3.2	UNPACKING	3-1
	3.3	INSTALLATION	3-1
	3.4	CABLING AND CONNECTIONS	3-1
	3.4.1	Input-Output Cable	3-1
	3.4.2	DC Power Connection	3-2
	3.4.3	AC Power Connection	3-2
	3.5	ENVIRONMENT	3-2
	3.6	INITIAL CHECKOUT	3-2
	3.6.1	Operating Frequency	3-3
IV	THEORY OF OPERATION		
	4.1	INTRODUCTION	4-1
	4.2	GENERAL DESCRIPTION	4-1
	4.3	FUNCTIONAL DESCRIPTION	4-3
	4.3.1	Control Logic	4-3
	4.3.2	Write and Fault Logic	4-6
	4.3.3	Read Logic	4-6
	4.3.4	Diskette Drive	4-7
	4.3.5	Read/Write Head	4-7

SECTION PAGE

4.4 CONTROL AND DATA-LINE CHARACTERISTICS 4-7
4.4.1 Logic Levels 4-7
4.4.2 Transmitter Characteristics 4-7
4.4.3 Line-Receiver Characteristics 4-7
4.4.4 Control and Data Line Functions 4-8

V DIAGRAMS

5.1 INTRODUCTION 5-1

VI MAINTENANCE

6.1 INTRODUCTION 6-1
6.2 MAINTENANCE TOOLS 6-1
6.3 PREVENTIVE MAINTENANCE 6-1
6.4 HEAD CLEANING 6-1
6.5 TROUBLESHOOTING 6-2
6.5.1 DC Voltage and Signal Check 6-2
6.5.2 Diskette Not Rotating 6-5
6.5.3 Ready Signal Missing 6-6
6.5.4 Drive Not Responding to Commands 6-7
6.5.5 Index Pulse Missing 6-8
6.5.6 Head Not Loading 6-9
6.5.7 Read/Write Head Not Stepping 6-10
6.5.8 No Track '00' Indicator 6-12
6.5.9 Read Errors 6-13
6.5.10 Write Errors 6-15
6.5.11 Write Protect Inoperative 6-17
6.6 ADJUSTMENT PROCEDURES 6-18
6.6.1 Carriage-Stop Adjustment 6-18
6.6.2 Burst to Index Check and Adjustment 6-19
6.6.3 Actuator Alignment (Diskette) 6-21
6.6.4 Push-Rod-Travel Adjustment 6-22
6.6.5 Door-Interlock-Switch Adjustment 6-23
6.6.6 Diskette-Load-Bail Adjustment 6-24
6.6.7 Spindle and Cone Adjustment 6-25
6.6.8 Write-Protect-Assembly Adjustment 6-26
6.6.9 Track '00' Switch Adjustment 6-26
6.7 REMOVAL AND REPLACEMENT PROCEDURES 6-27
6.7.1 Printed-Circuit Board (PWA) 6-27
6.7.2 Actuator Assembly 6-27
6.7.3 Drive Motor Assembly 6-29
6.7.4 Head Load Pad Replacement 6-29
6.7.5 Solenoid Replacement and Tang Adjustment 6-29
6.7.6 Carriage and/or Stepper-Motor Replacement 6-31

SECTION PAGE

6.8 FREQUENCY CONVERSION 6-31
6.8.1 Operating-Frequencies Conversion Procedure 6-31

VII MAINTENANCE AIDS

7.1 INTRODUCTION 7-1
7.2 PHYSICAL DESCRIPTION (Logic) 7-1
7.3 USE OF RELATIVE LEVEL INDICATORS 7-1
7.4 INTEGRATED CIRCUITS 7-1

VII PARTS DATA (77834771)

8.1 INTRODUCTION 8-1
8.2 ILLUSTRATIONS 8-1
8.3 PARTS LISTS 8-1
8.4 TOP MECHANICAL AND ASSEMBLY LOCATOR 8-1
8.4.1 Top Mechanical Assembly (TMA) 8-1
8.5 REPLACEMENT PARTS 8-1
8.6 PARTS LIST INSTRUCTIONS 8-12
8.6.1 Illustration Parts Lists 8-12
8.6.2 Top-Down Assembly/Component Parts List 8-12
8.6.3 Cross-Reference List 8-12
8.6.4 Sheet-Number Referencing 8-12

IX WIRE LISTS

9.1 INTRODUCTION 9-1
9.2 UPPER HARNESS ASSEMBLIES 9-1
9.3 LOWER HARNESS ASSEMBLY 9-1
9.4 STEPPER MOTOR 9-1
9.5 WRITE PROTECT 9-1

LIST OF ILLUSTRATIONS

FIGURE	TITLE	PAGE
2-1	Diskette Installation	2-2
3-1	AC Cable Assembly	3-3
4-1	Functional Block Diagram	4-5
5-1	Timing	5-2
5-2	Schematics	5-4
5-3	Assembly and Parts List	5-10
6-1	Head Load and Door Interlock Switch	6-3
6-2	Differential Read Signal for Entire Track	6-4
6-3	Differential Read Signal for Portion of Outer Track	6-4
6-4	Write Data, Write F/F Output, and Head Write Voltage for Outer Track	6-4
6-5	Base and Chassis Support Assembly	6-18
6-6	Carriage-Stop Adjustment	6-18.1
6-6a	Plastic Carriage-Stop and Stop-Gauge Assemblies	6-19.1
6-6b	Metal Carriage-Stop Assembly	6-19.1
6-7	Write-Splice-Bit-to-Index Timing	6-20
6-8	Head Alignment Amplitude	6-22
6-9	Chassis Base Assembly	6-23
6-10	Diskette Load Solenoid	6-24
6-11	Spindle and Cone	6-25
6-12	Base-Casting Assembly	6-28
6-13	Head-Load-Pad Replacement Illustration	6-30
6-14	Solenoid Adjustment	6-31
6-15	Drive Pulley Reversal	6-32
7-1	Inversion Conventions	7-1
7-2	Integrated Circuit	7-2
7-3	Schematic Symbols	7-2
	IPC (77834771)	8-1

LIST OF TABLES

TABLE	TITLE	PAGE
4-1	Phase Sequence of Stepper Motor	4-3
4-2	Input/Output Lines	4-8
5-1	PWA Configurator	5-1
6-1	Flowchart Reference	6-2

GENERAL DESCRIPTION 1

1.1 INTRODUCTION

The Flexible Disk Drive (FDD) is a compact, portable, random-access, data-storage device that interfaces with a central processor via a control unit. Input/Output data and control signals are transmitted by means of an I/O cable.

1.2 PURPOSE AND USE OF EQUIPMENT

Data, in the form of magnetized bits, is written on, or read from the tracks of a rotating diskette. The FDD uses a single, flexible, removable diskette (one recording surface) enclosed in a sealed jacket. The unit is capable of hard-sector of soft-sector (missing clock) format operation, but the missing clock must be recovered externally (from the FDD).

1.3 PRODUCT DESCRIPTION

The major FDD components are the spindle, diskette drive motor, read/write head, stepping motor, track-indexing device, and printed-circuit board.

The options include Write Protect, Data/Clock Separation, Power Reduction, Sector Separation, Unit Select, Ready, Door Unlock, Write Fault, and Hour Meter.

All FDD components are mounted on a base assembly. The front panel has a spring-loaded door through which the diskette is installed. The door is mechanically linked to the diskette loading mechanism and the head-load-interlock switch; therefore, when the door is closed the Read/Write head may be loaded on the diskette in preparation for the transfer of data.

Daisy-Chain Models - Throughout this manual certain features and operation of the Flexible Disk Drive are described in terms of the manner in which the FDD is designed to be connected to its controller. Daisy-chain models are designed so that one to four FDD units may be connected serially to a common controller. The controller continously monitors the operational readiness of each FDD in its chain and commands and controls the reading and writing operation of any selected FDD unit in its chain.

1.3.1 PHYSICAL DESCRIPTION

The physical dimensions for the equipment are as follows:

Height	4.97 inches (126.2mm)
Width	8.78 inches (223.0mm)
Depth	14.24 inches (361.7mm)
Weight	12 lbs. (5.44 kgm)

1.3.2 ELECTRICAL DESCRIPTION

The electrical specifications for the equipment are as follows:

- DC Power Source (Supplied by Host Equipment)

WITHOUT STEPPER-POWER REDUCTION	WITH STEPPER-POWER REDUCTION
+24 Volts (±10%) @1.3A Typical	+24V (±10%) @1.3A Typical, Stepping
	0.3A Typical, Not Stepping
+ 5 Volts (±5%) @0.8A Typical	+ 5V (±5%) @1.0A Typical, Not Stepping

- AC Power Source - Refer tothe FDD configurator or FDD nameplate to determine AC Power requirements.

1.3.3 PERFORMANCE CHARACTERISTICS

The equipment specifications for the FDD are as follows:

- ACCESSING TIME

Maximum Access Time	770 ms
Maximum One-Track Access Time	20 ms
Average Access Time	263 ms

- RECORDING

Mode	Double Frequency	MFM
Density (nominal)	1836 BPI(72.3 BPmm)	3672 BPI (144.6 BPmm) Outer Track
	3268 BPI(128.7 BPmm)	6536 BPI (257.3 BPmm) Inner Track
Data Transfer Rate	249, 984 bits/sec	499, 968 bits/sec
Bits/Byte	8	8
Bits/Track	41,664	83,328
Tracks	77	77
Sectors	Format Determined	Format Determined

- DATA CAPACITY

Bytes/Track	5,208	10,416
Bits/Track	41,664	83,328
Bits/Diskette	3,208,128	6,416,256

• FLEXIBLE DISKETTE (Optional)	CDC 421-60W, Single Density,or Equiv. CDC 423-60W, Double Density, or Equiv.
Diskette Dimensions	8 x 8 in. (203.2 x 203.2 mm) (including jacket
Useable Diskette Recording Surfaces	1
Diskette Surface Diameter	7.88 in. (200.1 mm)
Recording Radii	Track 76 (inner) 2.0290 in. (515 mm) nominal Track 00 (outer) 3.6123 in. (918 mm) nominal
Diskette Surface Coating	Magnetic Oxide
Diskette Velocity	360 rev/min
• READ/WRITE HEAD	
Head Unit	1
Track Width	0.013 in. (0.33 mm)
Track Spacing	0.02083 in. (0.529 mm)
Erase to Read/Write Gap	0.035 in. (0.889 mm)

OPERATION 2

2.1 INTRODUCTION

The FDD is under direct control of the input/output and power sources. No special start-up procedure is required. Operation is fully automatic and requires no operator intervention during normal operation.

2.2 OPERATING INSTRUCTIONS

Verify that power and I/O cables are securely attached before operation.

2.2.1 FLEXIBLE DISKETTE LOADING

a. Apply AC/DC power to unit.
b. Open FDD door.
c. Remove diskette from storage envelope as shown in Figure 2-1.
d. On units with the Write-Protect option, be sure the Write-Protect slot in the jacket is open, as shown in Figure 2-1, if the diskette is to be write-protected.
e. If a diskette with a Write-Protect slot is not utilizing the Write Protect, that is, it will be written on, the slot must be covered with a piece of tape which is opaque to infrared.
f. Carefully slide diskette into FDD, as shown in Figure 2-1, until jacket is solidly against stops.
g. Carefully close unit door. Ensure that jacket is properly seated, spindle has engaged diskette, and door is closed and latched.
h. Protect the empty envelope from liquids, dust, and metallic materials.

2.2.2 FLEXIBLE DISKETTE REMOVAL

a. Open FDD door to stop diskette rotation and disenagage the spindle.
b. Remove the diskette from the FDD and put it in its storage envelope.
c. Close the FDD door.

2.3 ERROR RECOVERY

The following paragraphs give information needed to recover from possible errors in equipment operation.

2.3.1 SEEK ERROR

Seek errors will rarely occur unless the stepping rate is significantly exceeded. In the event of a seek error, recalibration of track location can be achieved by repetitive step-out commands until a Track 00 signal is received.

2.3.2 WRITE ERROR

To guard against degradation from imperfections in the media, no more than four attempts to write a record should be used when read-after-write errors are encounted. In the event a record cannot be successfully written within four attempts, it is recommended that the sector or track be labeled defective and an alternate sector or track assigned. If more than two defective tracks are encountered, it is recommended that the diskette be replaced.

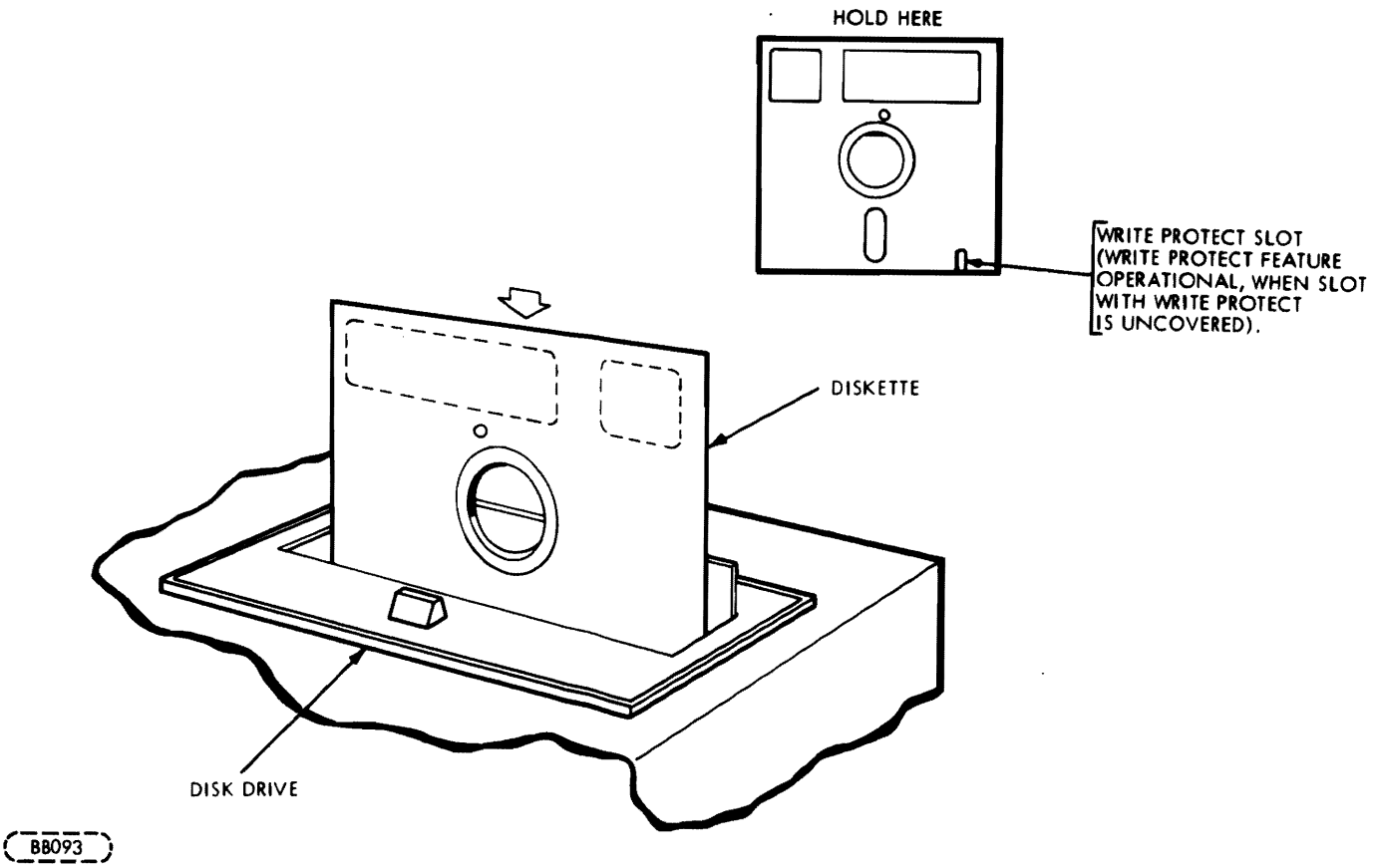

Figure 2-1. Diskette Installation

2.3.3 READ ERROR

In the event of a Read error, up to 10 attempts should be made to recover with re-reads. If after 10 attempts the data has not been recovered, step the head several tracks away and then re-position to recover the data. Unloading the head when data transfers are not imminent will increase the data reliability and extend the diskette life.

2.4 DISKETTE HANDLING RECOMMENDATIONS

Since the recorded diskette contains vital information, reasonable care should be exercised in its handling. Longer diskette life and trouble-free operation will result if the following recommendations are followed.

a. Do not use a writing device which deposits flakes e.g., lead or grease pencils, when writing on the diskette jacket label.
b. Do not fasten paper clips to diskette jacket edges.
c. Do not touch the diskette surface exposed by the jacket slot.
d. Do not clean the diskette in any manner.
e. Keep the diskette away from magnetic [illegible] from ferromagnetic materials that may be magnetized.

f. Return the diskette to its envelope when removed from the FDD.
g. Protect the diskette from liquids, dust, and mettalic substances at all times.
h. Do not exceed the following storage environmental conditions:

Temperature:	50° to 125°F (10° to 56.1°C)
Relative Humidity:	8% to 80%
Maximum Wet Bulb:	85°F (29.4°C)

i. Diskettes should be stored in a box or cabinet when not in use.

INSTALLATION AND CHECKOUT 3

3.1 INTRODUCTION

This section provides the information and procedures necessary to put an FDD into operation.

3.2 UNPACKING

Unpack the FDD as follows:

a. Cut the banding and lift the top half of the styrofoam shell from the unit.
b. Lift the unit in the polyethlene bag from the bottom half of the styrofoam shell and remove the unit from the polyethylene bag.

During unpacking, care must be used so that any tools being used do not inflict damage to the unit. As a unit is unpacked, inspect it for possible shipping damage. All claims for the type of damage should be filed promptly with the carrier involved. If a claim is filed for damages, save the original packing materials.

3.3 INSTALLATION

Install the FDD in the designated location in the host equipment.

3.4 CABLING AND CONNECTIONS

Connect the AC cable, I/O cable, and DC cable if applicable between the FDD and host equipment.

3.4.1 INPUT-OUTPUT CABLE

The maximum cable length from connector to connector is 25 feet. All inputs and outputs require pairs, one line for function, one for ground. The characteristic impedance is typically 120 ohms.

The information relative to the I/O connector (J1) and pin/signal assignments are defined in Table 5-1, Figure 5-2, and Figure 5-3.

The terminating resistor pack RM1 (See Figure 5-3) is to be installed in the end FDD (farthest from the controller) ONLY. Switches S3-1 and S3-5 also must be activated to complete I/O termination in the end FDD. Terminators in more than one FDD during daisy-chain hookup or activation of more than one S3-1 and/or S3-5 may result in damage to the controller.

For daisy-chain configurations, switch S1 determines the FDD position in the daisy-chain. Therefore, to set the position of the FDD in the daisy-chain, activate S1-1 and S1-5 for position 1, S1-2 and S1-6 for position 2, S1-3 and S1-7 for position 3, and S1-4 and S1-8 for position 4. All other of the above positions are to be deactivated. (Note that S3-2, S3-3, and S3-4 do not pertain to daisy-chain operation.) See Figure 5-3B.

3.4.2 DC POWER CONNECTION

Daisy-chain FDD models receive DC power (user-supplied) through a power cable which interfaces with its mating connector (J7) on the printed-circuit board. The pin assignments and line functions are shown on sheets 1 and 6 of the schematics, Figure 5-2. The mating connector is described in Figure 5-3.

3.4.3 AC POWER CONNECTION

The AC Power Cable (CDC P/N 75292202 or equivalent - see Figure 3-1) is an optional item supplied on order. The cable consists of stranded wire, 18 AWG minimum with center pin connection utilized as frame ground. Refer to Figure 3-1 for connector part numbers and attachment.

3.5 ENVIRONMENT

Operating and storage environments of the FDD are as follows:

Operating:	50° to 100°F (10° to 38°C) 12°F (-11°C)/hr max. fluctuation 20% to 80% relative humidity (providing there is no condensation)
Non-Operating:	-30° to +150°F (-35° to 65°C) 5% to 95% relative humidity (providing there is no condensation) Max. Wet Bulb 80°F (27°C).

3.6 INITIAL CHECKOUT

This procedure should be used to determine that FDD is operational. The procedure assumes that the unit is installed and the I/O and power cables are connected.

a. Apply AC power to unit and visually check that the spindle rotates.
b. Apply DC power to unit.
c. Using dip switch S1:
   1. Close one of the Unit Select switches (dip switch position 1, 2, 3, or 4) located on the circuit board.
   2. Close one of the Ready switches (dip switch position 5, 6, 7 or 8) located on the circuit board.
d. Insert the diskette as described in Section 2.
e. Apply a head-load-command signal to the unit and close the access door. Check that the head-load solenoid actuates, and the door microswitch is actuated.
f. Apply a stepping-command signal to the unit and check that the actuator steps the head as commanded.
g. Remove the diskette.
h. Remove the command signals and power from the unit.

3.6.1 OPERATING FREQUENCY

If the required operating frequency is different than that which the unit is configured, the procedure for converting operating frequencies using the dual diameter reversible pulley is provided in Section 6, "Frequency Conversion" for applicable models.

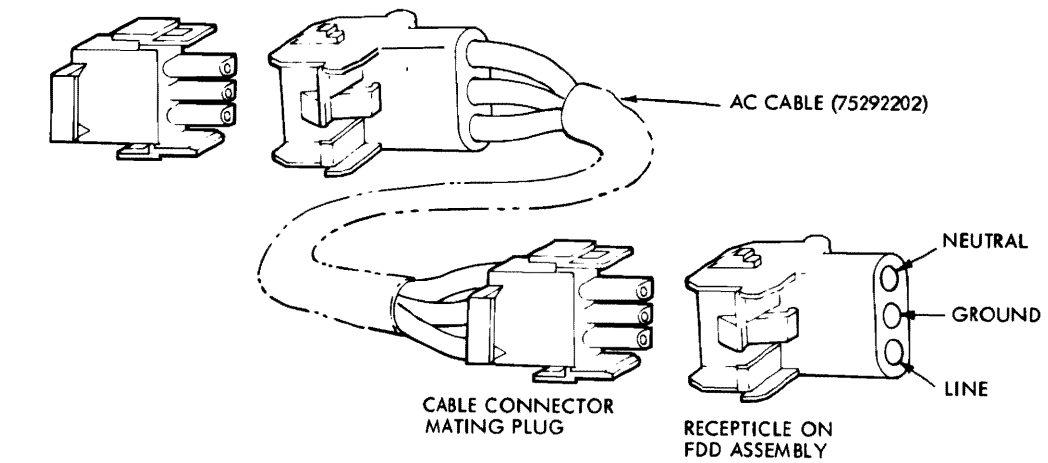

Figure 3-1. AC Cable Assembly

THEORY OF OPERATION 4

4.1 INTRODUCTION

The basic functions performed by the FDD are: (1) Receive and generate control signals, (2) Position the Read/Write head on selected tracks, and (3) Write or Read data upon command from the FDD controller. These functions are accomplished upon selection after initial indication to the controller that the FDD is ready to operate and accept commands.

The theory of operation for the FDD is divided into two parts. The first part gives a general theory of operation. The second part gives a detailed functional description of all major components both electronic and mechanical and describes all signals exchanged between the FDD and the controller.

4.2 GENERAL DESCRIPTION

The basic function of the FDD is to indicate to the controller when it is ready to operate, and respond to the commands of the controller to: (1) Receive and generate control signals, (2) Position the Read/Write head to selected tracks, and (3) Write or Read data on the diskette when selected.

Signals received and transmitted by the FDD are shown in Figure 4-1, and explained in Table 4-2. All signals received by the FDD are gated with Unit Select so that no stepping, reading, or writing can be performed on an unselected FDD. Also, all signals generated within the FDD, except the Ready signal, are gated with Unit Select so that no signals can be transmitted from an unselected FDD.

During the write operation, the selected FDD receives Write Enable, Erase Enable (when S3-3 is activated and S3-4 is deactivated), Head Load, Write Data, and Low Current (Track 43 or greater) signals. If a Write Fault occurs, it will be transmitted to the controller. During Read operation, the selected FDD will receive a Head Load command. The Write Enable line remaining high implies a read operation. Under these conditions, the FDD will transmit Separated Data, Separated Clock, and Compositie Read Data signals to the controller. Controller step in and step out commands are received initiating a track-seek operation on a selected FDD. The FDD transmits Index and Sector pulses as long as it is selected. Also, the selected FDD transmits a Track 00 signal to the controller whenever the Read/Write head is at Track 00.

Positioning of the carriage-mounted Read/Write head is accomplished by a lead screw driven by a stepper motor. Each step command from the user system increments the stepper motor which, in turn, rotates the lead screw 15°. Each 15° rotation of the lead screw moves the Read/Write head one track position. The FDD has a power-reduction option which reduces the stepper-motor power 15 milliseconds after the last step command.

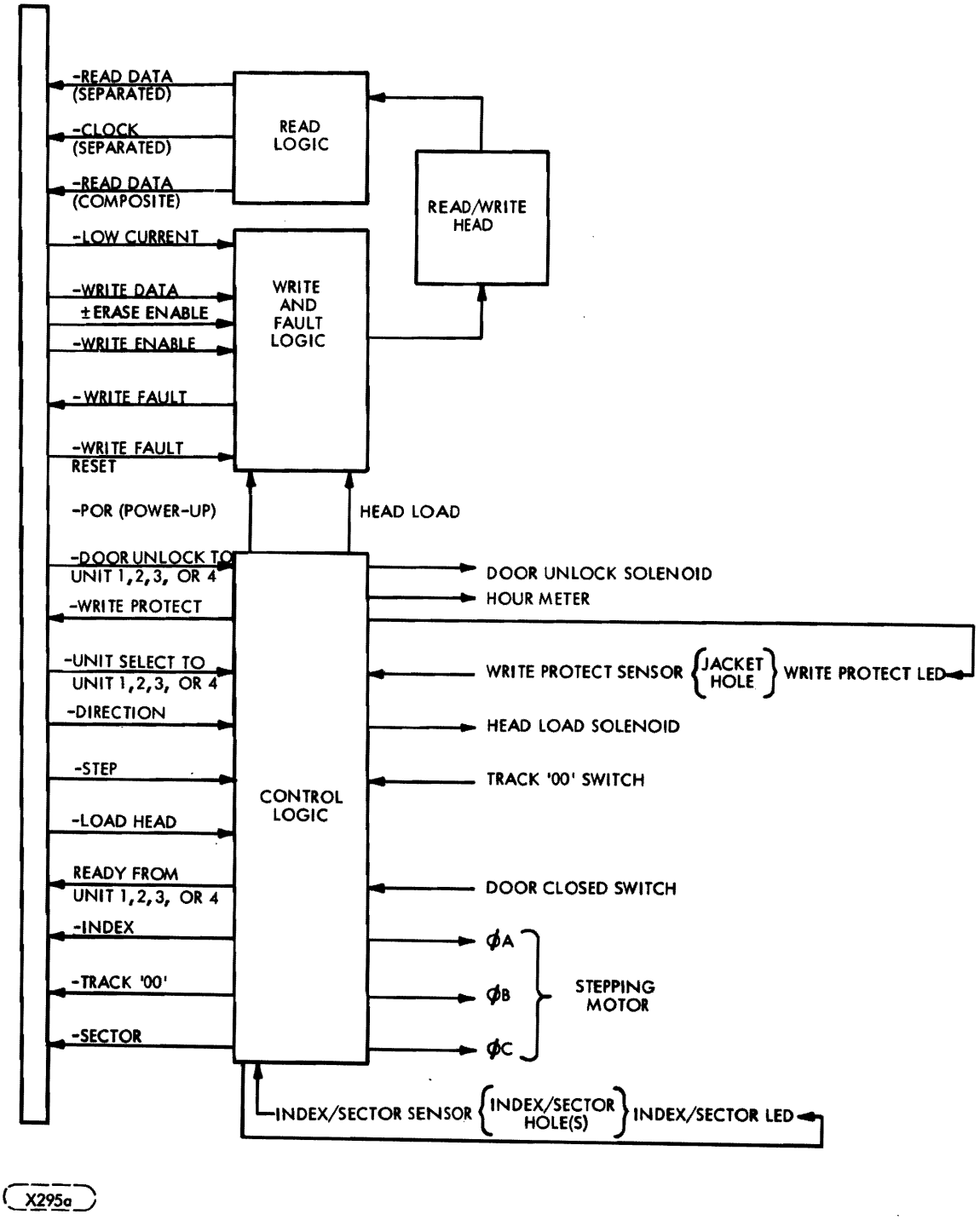

Figure 4-1. Functional Block Diagram

A reading or writing operation begins by placing the Read/Write head in contact with the diskette with a Head Load command and at the desired track. To write on the diskette, Write Enable is sent by the controller to condition the write logic. The write current then in the head, reverses polarity synchronous with the low-to-high transitions of the Write Data pulses from the controller. The current reversals cause magnetic flux reversals, the data and clock bits which are induced on the desired diskette track. Erasure of previously recorded data is simultaneously accomplished during the writing operation in addition to a delayed-tunnel-erase or external controller-enabled erase which ensures disk interchangeability.

To read from the diskette, magnetized bits in the format of the pre-recorded data are sensed by the Read/Write head. This signal is amplified, digitized, and transmitted to the user system.

4.3 FUNCTIONAL DESCRIPTION

Refer to Figure 4-1, 5-1, and the Schematic Diagram, Figure 5-2, for the following discussion.

The FDD is divided into the following major functional areas:

a. Control Logic;
b. Write and Fault Logic;
c. Read Logic;
d. Diskette Drive;
e. Read/Write Head.

4.3.1 CONTROL LOGIC

The functions of the control logic are to generate the signals that (a) establish the ready status of the FDD, (b) step the Read/Write head in or out upon selection and command of the controller, (c) load the head on the diskette for read/write operations, (d) protect the diskette from writing if the write-protect slot is present, (e) indicate when the Read/Write head is at Track 00, (f) generate the index and sector pulses when the diskette is rotating and the FDD is selected, (g) terminate the FDD door-latch inputs for daisy-chain operation, and (h) unit selection of the FDD.

a. The Ready signal is generated when the diskette comes up to proper operating speed. The index pulses are used to re-trigger the multivabrator (U31 pin 5). The output of this element will remain high on a continuous basis when the repetition rate of the index pulses is shorter than the time out of U31 pin 6. This logic function is used to control the R/S flip flop (U19) to generate the Ready signal. Switches (S1-5,6,7 and 8) allow selection of the relative position of each FDD within the Daisy Chain Configuration.

b. At initial voltage application, the two flip flops of U25 are asynchronously reset through the action of comparater U30. At the instant the 5V appears, U30 pin 1 will go high, forcing pins 1 and 13 of U25 low, and forcing output pins 6 and 8 of U25 high. As capacitor C43 is charged, U30 pin 1 will switch low, assisted by hysteresis. This will cause the reset signal to go high and remain high as long as the +5 volts remains present.

Each step command received sequentially energizes one of the three phases of the stepper motor. Phase switching occurs 4 ms after the step command. Either the logic level of the Direction signal or the use of Step In or Step Out signals determine whether the phase sequence is ØA, ØB, ØC, ØA. . . or ØA, ØC, ØB, and ØA.

Movement of the Read/Write head is initiated by the step commands from the controller. the head is stepped one track, either toward the spindle (In) or away from the spindle (Out), with each step command. The direction is regulated by the status of the Direction line (a low level of the Direction line causes the Read/Write head to step toward the spindle, and a high level causes the Read/Write head to step away from the spindle).

Drive to the specific stepper-motor phases, A, B, and C, is provided by logic-driven Darlington transistors Q3, 4, and 5. The logic drivers also decode the activated stepper phase information from the outputs of U25's flip flops. The leading edge of a step command triggers the three microsecond one-shot U16, whose trailing edge clocks the flip flops.

The phase sequence through which the stepper motor is driven (see Table 4-1) is controlled by the steering logic: gates U27 pin 8; U27 pin 11; U28 pin 3; and U28 pin 6. These gates receive direction information from U22 pin 4. The output of this gate is high during the rising edge of the flip-flop clock for the step-in sequence. It is low during the step-out sequence. Encoded information, indicating the active stepper-motor phase at the time a step command has been issued, is fed to the steering logic from flip flop U25 output pins 5, 6, 8, and 9.

Table 4-1. Phase Sequence of Stepper Motor

Change the Active Phase Ø		To Step
From	To	
A	B	IN
B	C	
C	A	
A	C	OUT
B	A	
C	B	

The power-reduction option, which reduces the stepper-motor power 15 milliseconds after the last step command, is accomplished through the retriggerable one-shot multivibrator U26 at pin 7. The time-out of this one shot is approximately 15 milliseconds. Step commands which occur at a repetition rate of 10 milliseconds will hold U26 low. This has the effect of holding transistor Q2 on, and clamping the center tap of the stepper motor at + 24 volts. When the last step command is received, the one shot will time out and go high. This turns Q2 off, leaving the center tap of the stepper floating. The inductive reactance of the stepper-motor winding in use at that

instant of time will force the voltage at the center tap toward a negative voltage; however, the +5 volt clamp through CR11 will prevent the voltage from dropping lower than approximately 4.3 volts. The stepper-motor voltage will then remain at this level until the next step command is received, which will force Q2 to the on state again.

c. The Read/Write head of a selected FDD can be loaded when the diskette is fully installed and the front-panel door is closed. Closing the front-panel door actuates the door-interlock switch which completes the circuit to the head-load solenoid. When the controller sends a Head-Load signal, the head-load solenoid is energized causing the armature bail to actuate. The actuation of the bail permits the head-load arm and its pressure pad, under tension, to hold the disk surface against the Read/Write head.

d. The Write-Protect function is accomplished through use of an LED (light-emitting diode) and a photo-transistor. These are mounted such that the presence of a write-protect slot in the jacket of the diskette will cause pin 14 of comparator U30 to be driven high. This signal is gated with Unit Select and Write Enable to inhibit writing on any diskette possessing a write-protect slot.

e. Track 00 signal is generated when the carriage assembly closes the Track 00 switch. Closing this switch sets the latch formed by the two gates of U29 pin 2 and U29 pin 4. The output of this latch (pin 2) is gated with ØA and Unit Select to provide the Track 00 signal that is transmitted to the controller from U15 pin 6.

f. The beginning of each diskette track is indicated by an Index pulse. The diskette rotates between a light source (LED) and a sensor (photo transistor). When the index hole in the diskette passes over the light source, light is detected by the sensor. The sensor output is amplified and transmitted to the controller as the Index pulse when the FDD is selected.

g. The Door Unlock inputs are terminated by resistor terminator RM1 and S3-5.

h. The unit-select function inhibits all command and status signals except Ready. The position of the FDD in the daisy-chain configuration is determined by the activation of switches S1-1,2,3,and 4.

4.3.2 WRITE AND FAULT LOGIC

A write operation begins with a Write-Enable command from the controller when the FDD is selected. This command simultaneously enables the write-data switching drivers (flip flop U9 pins 5 and 6), the write-data gate (U5 pin 5), blocks the input to the read circuit by reverse-biasing diodes CR1 through CR4, and after a delay energizes the erase windings (S3-4 activated, S3-3 deactivated). In the case where externally controlled erase is used, S3-3 is activated and S3-4 is deactivated. The polarity of the Erase Enable line is controlled by S3-2. For S3-2 activated, Erase Enable is ACTIVE LOW, for S3-2 deactivated Erase Enable is ACTIVE HIGH. Data applied to the Write-Data input alternately switches a constant write current through the write drivers to the head windings. Low-Current operation, used when writing on track 43 or greater, is selected by switching a shunt resistor (R38) into the write current source. The current source, U11 pin 5, is a current-mirror circuit which causes the current into pin 5 to mirror the current into U11 pin 1.

A Write-Fault signal is generated if Write Enable is commanded and the head is not loaded (head-load solenoid not energized), or Write Enable is commanded and no data is applied, or Write Enable is commanded but Write Data is applied at the wrong rate. Either one or both of the conditions sets the Write Fault latch (U6). Commanding a Write-Fault Reset clears the Write-Fault signal by resetting the Write-Fault latch.

4.3.3 READ LOGIC

Read operation is enabled when the Read/Write head is loaded on the diskette and Write Enable is not commanded. With Write Enable not commanded, the data-blocking diodes (CR1 through CR4) are forward-biased and data sensed by the Read/Write head is fed to the read-data circuit. The read signal from the diskette is in the form of a sine wave.

This analog signal is amplified by U3, filtered, differentiated by C12/R11 and C13/R12, amplified by U2, and coupled to a comparator/logic circuit to detect zero crossings and reject noise in the differentiated read signal.

The out-of-phase comparators U1 pins 7 and 12 have rise and fall times whose differences are exaggerated by slow-down capacitor C2. This results in a narrow negative pulse at U8 pin 11 which triggers a one-microsecond retriggerable one-shot, U26 pin 9.

Flip flop U9 pins 8 and 9 perform a noise-rejection function in that noise near the zero crossings of the amplified differentiated data only result in retriggering U26 pin 9. This appears as jitter in the clock for the clip flop whose data input, derived from redundant comparator U10 pin 12, has be that time stabilized.

Another slow-down capacitor, C5, causes a negative 60 ns pulse to appear at the output of U8 pin 8 whenever the flip flop toggles. Although shifted in time by approximately the delay of one-shot U26 pin 9, each pulse corresponds to a zero crossing of the differentiated signal, and a peak of the analog read signal. Jitter at the flip-flop clock input and U8 pin 8, which is due to noise at the zero crossings, will not affect the 250 ns composite data pulse width.

4.3.4 DISKETTE DRIVE

Diskette drive is accomplished by clamping the diskette between the cone assembly and a belt-driven spindle. The spindle is rotated at 360 rev/min by the diskette drive motor. A dual-pulley option permits 50 or 60-Hz operation without a motor change.

4.3.5 READ/WRITE HEAD

The Read/Write head is in direct contact with the diskette during read or write operation. Since the head is rigidly mounted on the carriage assembly, head load is achieved by a solenoid-actuated bail allowing the head-load arm to force the diskette against the Read/Write head. The head surface is designed for maximum signal transfer to and from the magnetic surface of the diskette with minimum head/diskette wear. The tunnel-erase gap DC-erases the intertrack area to improve off-track signal-to-noise ratio and permit diskette interchange between units.

4.4 CONTROL- AND DATA-LINE CHARACTERISTICS

All signal lines must be terminated at the receiver with a characteristic impedance of 120 ohms, typically. Transmission is by 26 AWG (min.), 120-ohm flat cable or twisted pair (one twist per inch) with a maximum line length of 25 feet (7.62 m). Figure 5-1 shows the timing of typical operations.

4.4.1 LOGIC LEVELS

The following definitions will be used throughout this manual:

low= Logic 1, Active State	Refers to the low-voltage condition +0.4 VDC Max.
high = Logic 0, Inactive State	Refers to the high-voltage condition +2.4 VDC Min.

4.4.2 TRANSMITTER CHARACTERISTICS

The FDD uses the TTL7438 (quad 2-input buffer or driver) to transmit all control and data signals. This transmitter is capable of sinking a current of 48 ma with an output voltage of 0.4 volt.

4.4.3 LINE-RECEIVER CHARACTERISTICS

The FDD uses the SN7400 family gates for line receivers. The input of each receiver is terminated in 120 ohms.

4.4.4 CONTROL AND DATA LINE FUNCTIONS

The signals that are exchanged are described in Table 4-2 and are shown relative to a point of origin in Figure 4-1.

Table 4-2. Input/Output Lines

SIGNAL	FUNCTION
INPUT LINES	
-STEP	A 10-microsecond (minimum) logic 1 level pulse on this line causes the head to move one track as determined by the direction line.
-DIRECTION	A logic 1 level on this line and step pulse causes the head to move one track inward toward the center of the diskette. A logic 0 level on this line and step pulse causes the head to move one track outward from the center of the diskette.
-HEAD LOAD	A logic 1 level on this line loads the diskette against the head through the use of a pressure pad on the opposing side of the diskette. The logic 1 level must be initiated 60 milliseconds prior to initiating a read or write operation to allow for head load settling time. For increased head and media life, this signal should be at a logic 0 whenever a data transfer operation is not in process or pending.

Table 4-2. (continued)

SIGNAL	FUNCTION
INPUT LINES	
-WRITE ENABLE	To enable the FDD write driver, this line is held at a logic 1. To disable the FDD write driver and enable the FDD read circuitry, this line is held at logic 0. 500 microseconds minimum is required after a write operation before read data is stable.
-WRITE FAULT RESET	A logic 1 level on this line clears the write fault latch.
-WRITE DATA	This line contains the composite double frequency coded write clock and data information to the FDD. The write clock and data pulses must be 250 nanoseconds ± 20% in length and are true at the logic 1 level. Information to be recorded on the diskette is derived from the transition of each pulse from logic 1 to logic 0.
-LOW CURRENT	This line reduces write current for tracks 43 or greater. A low level reduces write current.
-UNIT SELECT	On this line a logic 1 level enables the FDD interface except for -Ready.
±ERASE ENABLE	A logic 1 level on this line with S3-2 activated energizes the head erase winding. A logic 0 on this line with S3-2 deactivated energizes the head erase winding. (S3-3 must be activated, S3-4 deactivated to select the external erase function.)
OUTPUT LINES	
-READY	A logic 1 level indicates that the door is closed, a diskette is rotating, and that no write fault condition exists.
-INDEX	This line gives an indication of the rotational position of the diskette by outputting a logic 1 pulse for every index hole of the diskette. The 1.5 millisecond pulse is generated by sensing the index hole in the diskette using a photo-optical technique.

Table 4-2. (continued)

SIGNAL	FUNCTION
OUTPUT LINES	
-WRITE FAULT	A logic 1 level indicates one or more of the following fault conditions. -Write enable without head load. -Write enable without write data. Incorrect write data rate. A write fault can be cleared by a logic 1 on the write fault reset line.
-TRACK 00	A logic 1 level indicates that the head is positioned over Track 00.
-WRITE PROTECT	Logic 1 level indicates that slot on diskette is uncovered.
-READ DATA (Composite)	This line contains the unseparated data and clock information. A logic 1 level pulse of 250 nsec corresponds to a data or clock bit read from the diskette.

DIAGRAMS 5

5.1 INTRODUCTION

This section contains the printed circuit board documentation and related timing diagrams. This documentation applies to the printed circuit boards listed in Table 5-1. Refer to the Configurator sheet, located in the front of the manual, to determine the assembly number of the circuit board being serviced.

Figure 5-1 shows timing diagrams which illustrate signal/time relationships during read, write, step-in and step-out operations. Figure 5-2 is the printed circuit board schematics and Figure 5-3 contains the assembly drawing and parts list.

Table 5-1. PWA Configurator

CONFIG. REF. NO.	CIRCUIT BOARD IDENT. NO.	INTERFACE CONNECTOR TYPE (SEE FIGURE 5-3)	OPTION CHART: HOUR METER	WRITE PROTECT	DATA CLOCK SEPARATION	POWER REDUCTION	SECTOR SEPARATION	UNIT SELECT	READY	DOOR UNLOCK TERMINATION	WRITE FAULT	EXTERNAL ERASE
501	75881950	A	X	X		X		X	X	X	X	X

(X161b)

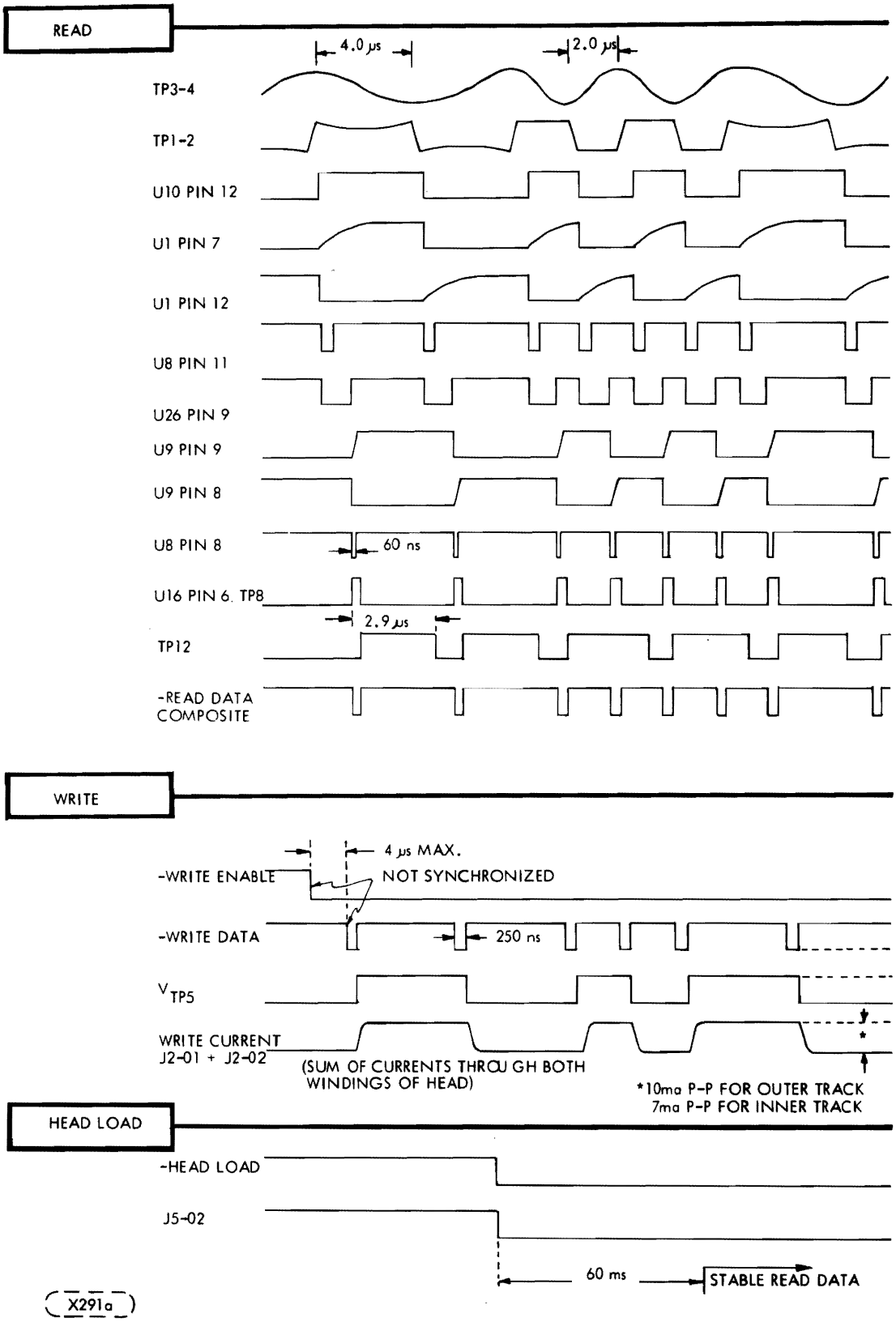

Figure 5-1. Timing

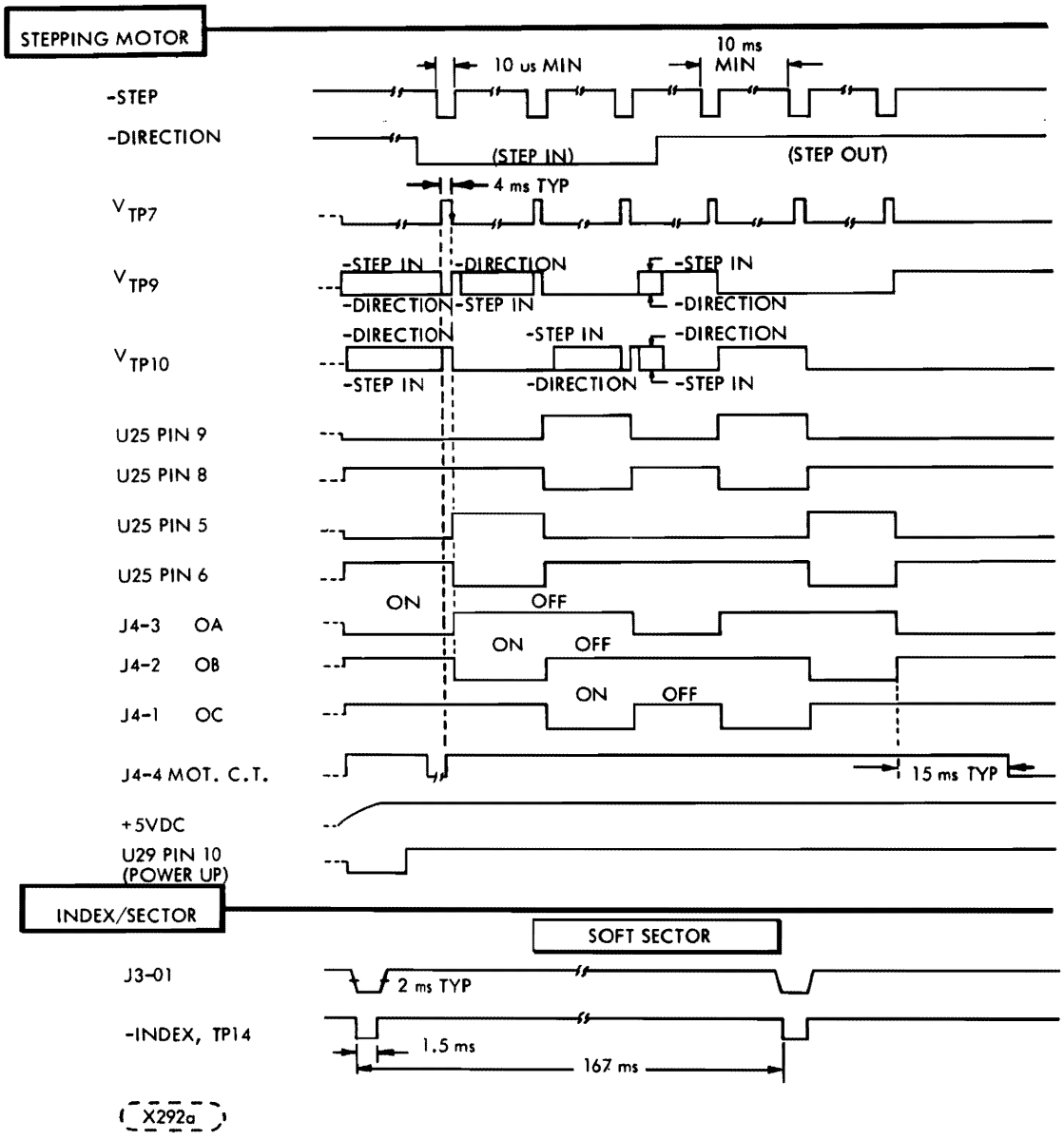

Figure 5-1. Timing (continued)

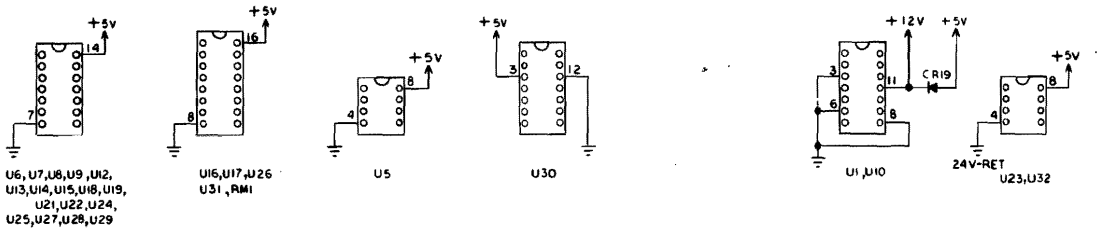

UNUSED LOGIC ELEMENTS

ELEMENT	VENDOR NO	LOCATION	OUTPUT PIN
140	7400	U8	3,6
204	7438	U14	3,6,8
195	9602	U17	9, 10
140	7400	U18	3,6,8
175	7474	U19	8, 9
195	9602	U31	9, 10

NOTES:
UNLESS OTHERWISE SPECIFIED:
1. RESISTOR VALUES ARE IN K-OHMS 1/4W, 1%
2. CAPACITOR VALUES ARE IN MICRO-FARADS
3 DOTTED BOXES INDICATE OPTIONS

Figure 5-2. Schematics (Sheet 1 of 6)

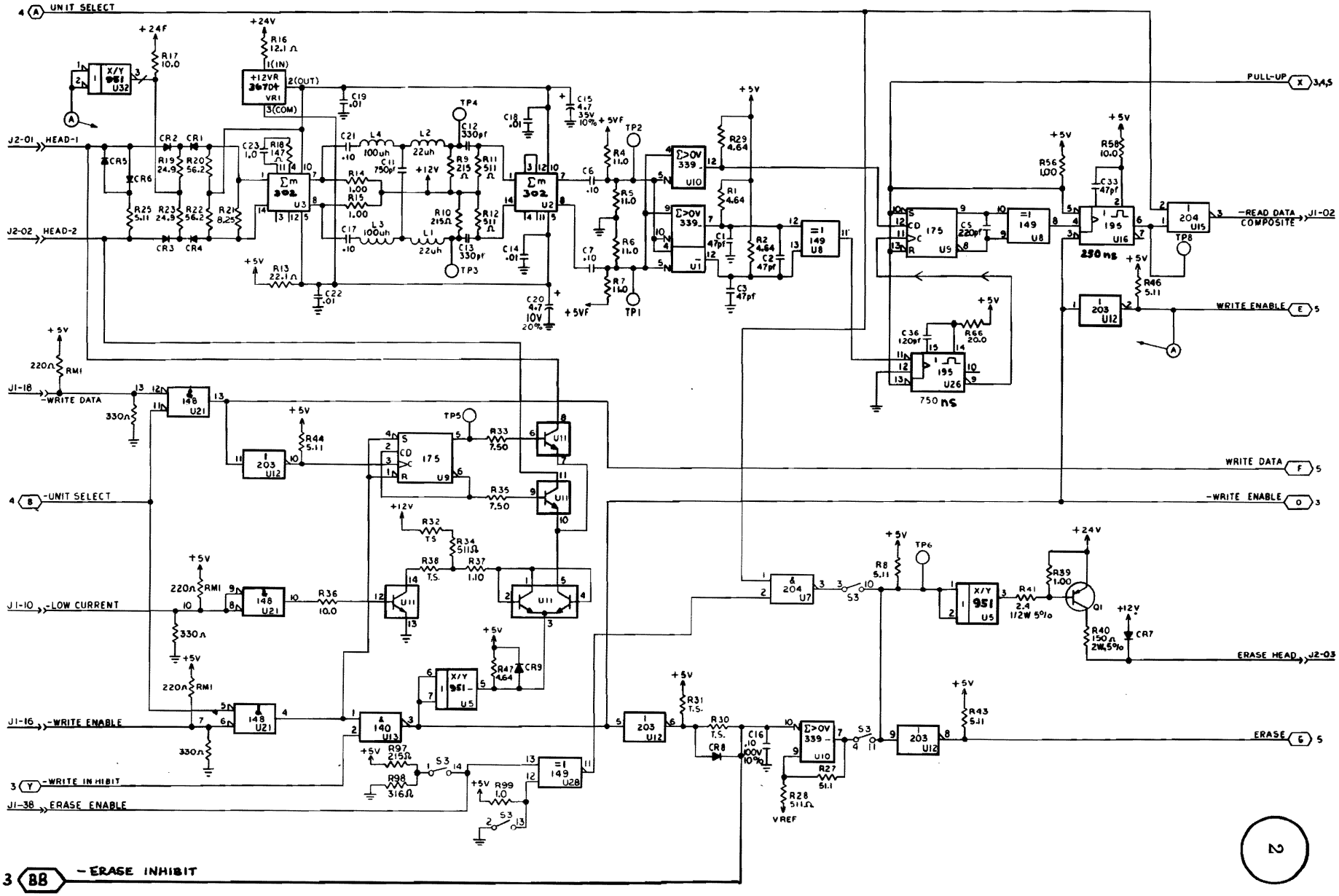

Figure 5-2. Schematics (Sheet 2 of 6)

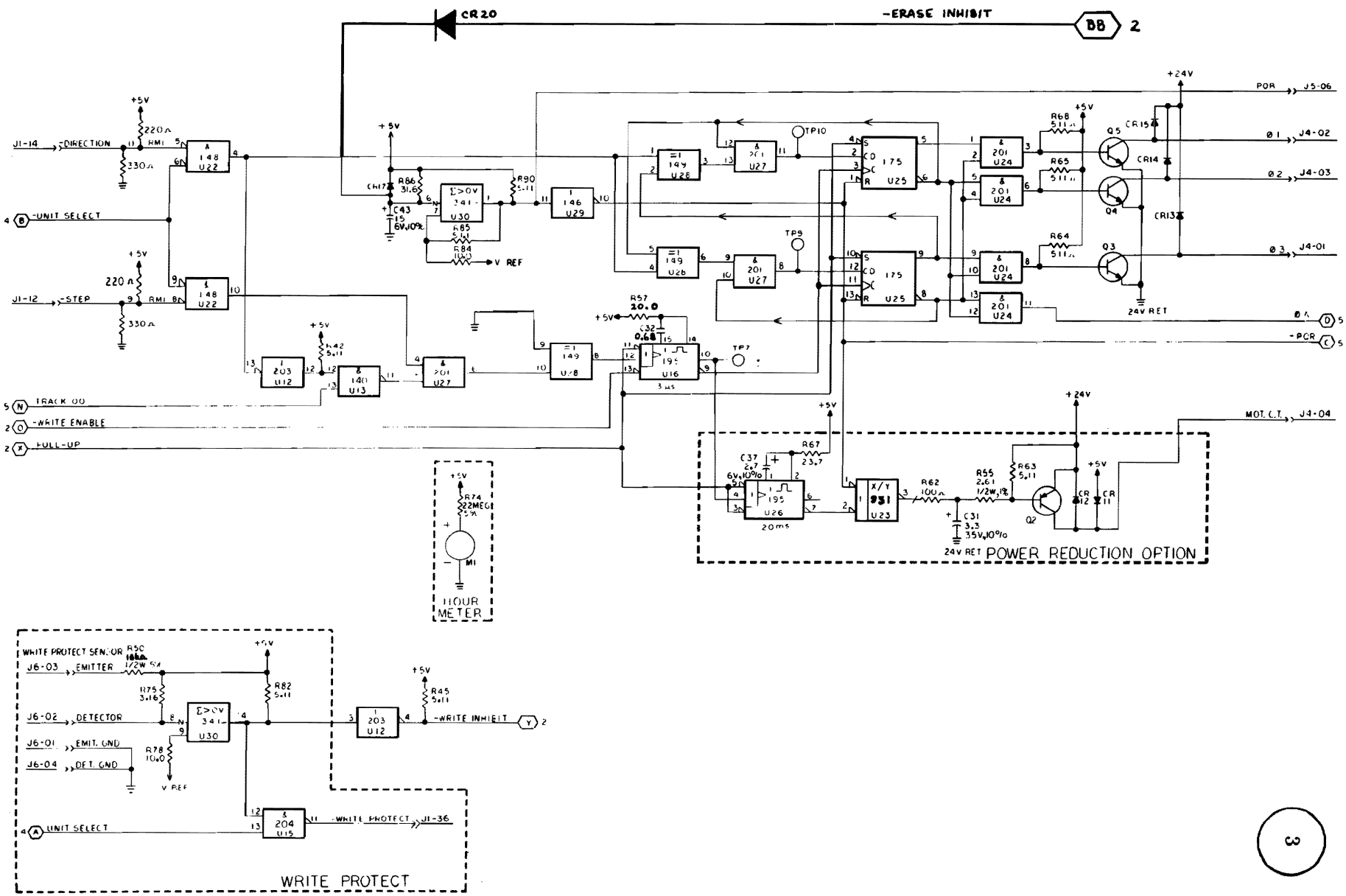

Figure 5-2. Schematics (Sheet 3 of 6)

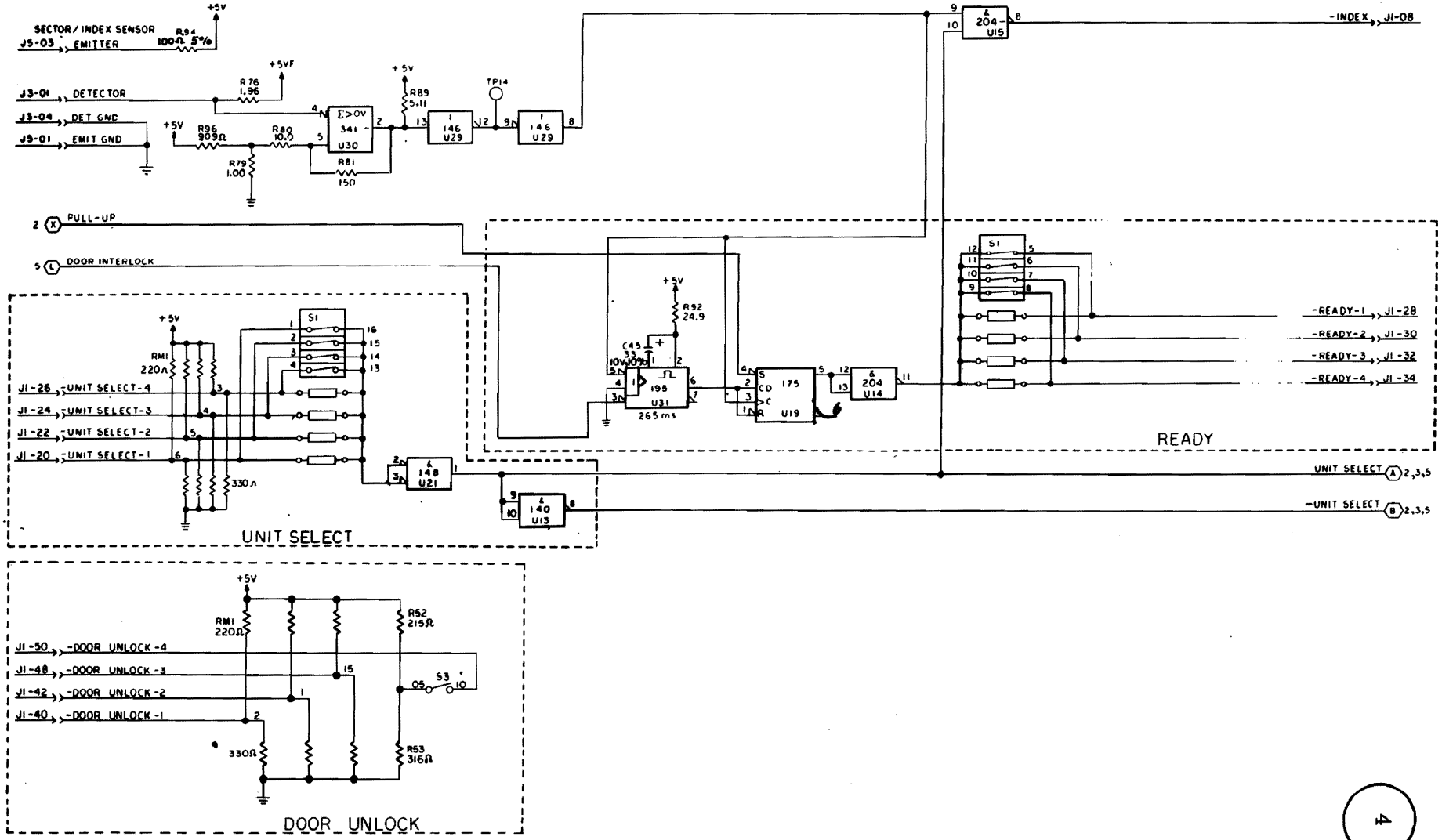

Figure 5-2. Schematics (Sheet 4 of 6)

4

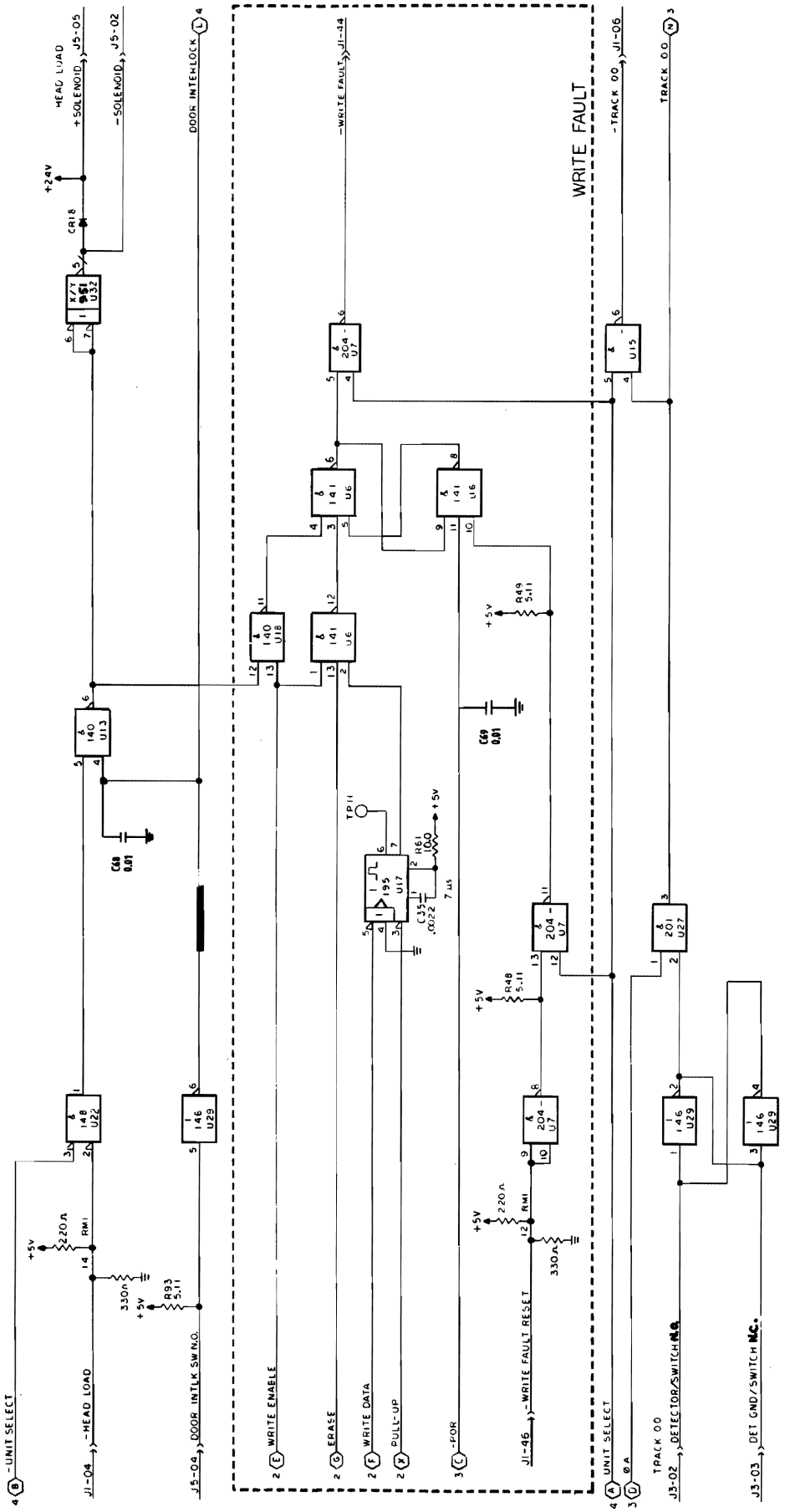

Figure 5-2. Schematics (Sheet 5 of 6)

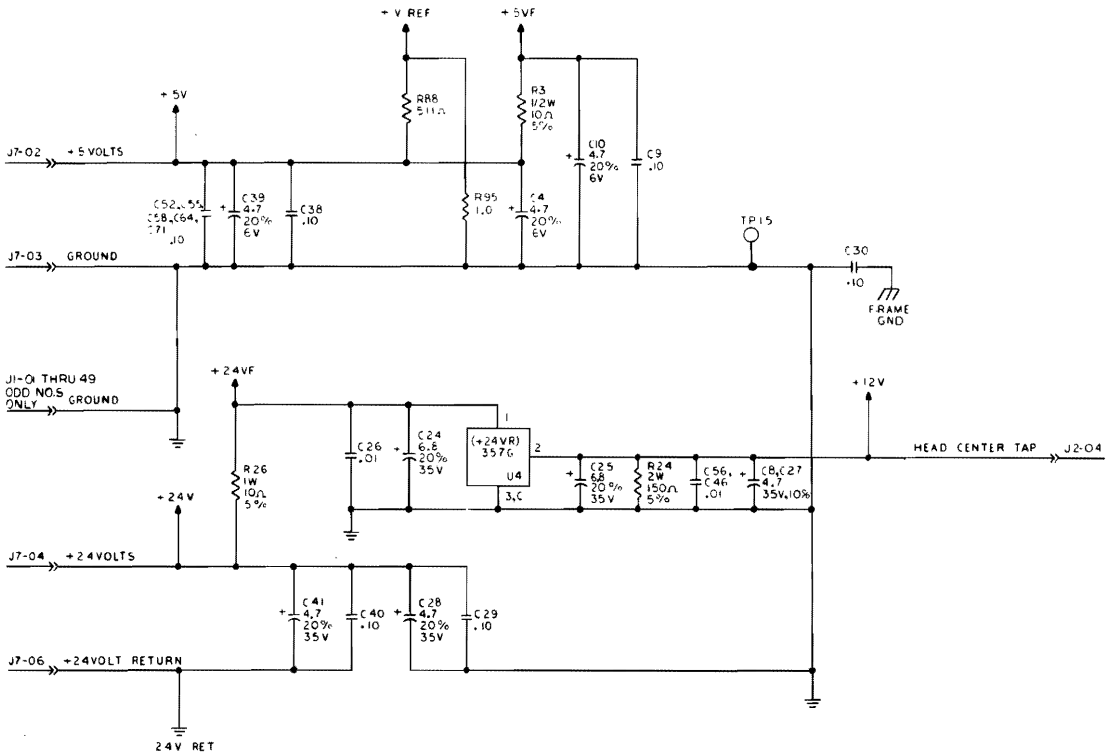

Figure 5-2. Schematics (Sheet 6 of 6)

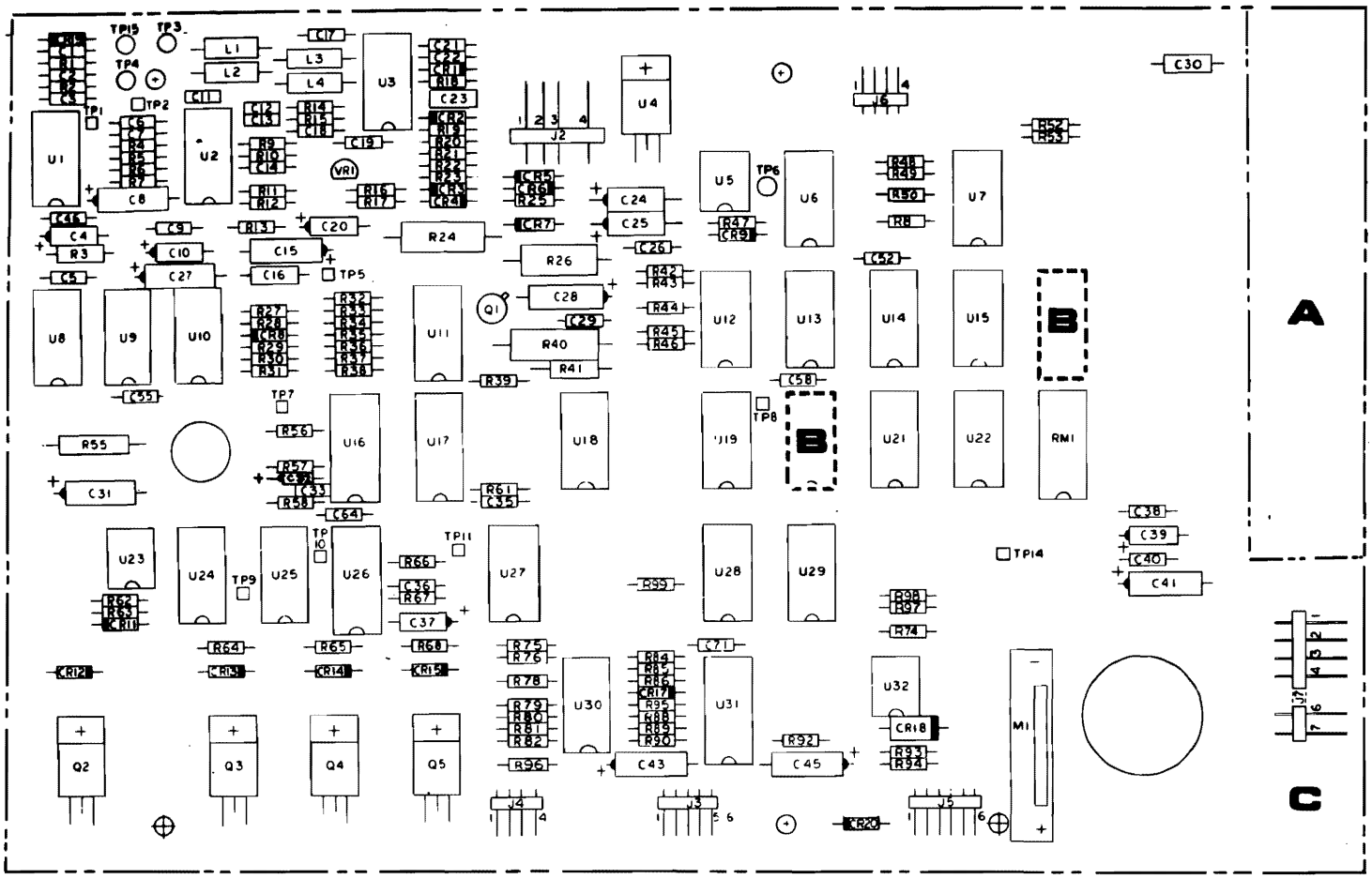

INTERFACE CONNECTOR TYPE A

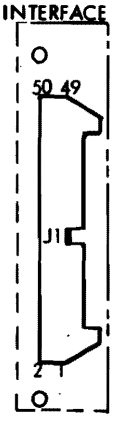

MATING CONN:
W/O STRAIN RELIEF
50 PIN 3M
P/N 3425-000
(CDC 95880003-9)
W STRAIN RELIEF
50 PIN 3M
P/N 3425-3000
ALTERNATE CONN
50 PIN AMP
P/N 86916-2

A

X311a

7 POSITION SWITCH

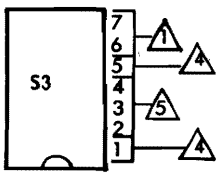

8 POSITION SWITCH

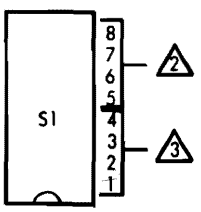

B B

1 NOT USED
2 READY
3 UNIT SEL.
4 TERMINATORS
5 EXTERNAL ERASE

MATING CONNECTOR:

- RECOMMENDED CONNECTOR
  AMP P/N 1-87270-1 HOUSING
  AMP P/N 87278-2 CONTACTS
- ALTERNATE CONNECTOR
  AMP P/N 3-87025-3
  HOUSING - (CDC 77830664-7)
  AMP P/N 87024-3
  CONTACTS - (CDC 77830663-9)
  AMP P/N 87116-1 KEYING
  POST - (CDC 77830660-5)

C

Figure 5-3. Assembly and Parts List (Sheet 1 of 5)

RES	PL ITEM
R1	44
R2	44
R3	69
R4	57
R5	57
R6	57
R7	57
R8	52
R9	41
R10	41
R11	54
R12	54
R13	39
R14	43
R15	43
R16	40
R17	35
R18	78
R19	60
R20	36
R21	37
R22	36
R23	60
R24	71
R25	52
R26	73
R27	50
R28	54
R29	44
R30	63
R31	63
R32	63
R33	46
R34	54
R35	46
R36	35
R37	47
R38	63
R39	43
R40	71
R41	70
R42	52
R43	52
R44	52
R45	52
R46	52
R47	44

RES	PL ITEM
R48	52
R49	52
R50	56
R51	--
R52	--
R53	--
R54	--
R55	--
R56	43
R57	45
R58	35
R59	--
R60	--
R61	35
R62	61
R63	52
R64	54
R65	54
R66	45
R67	55
R68	54
R69	--
R70	--
R71	--
R72	--
R73	--
R74	--
R75	115
R76	42
R77	--
R78	35
R79	43
R80	35
R81	58
R82	52
R83	--
R84	35
R85	50
R86	51
R87	--
R88	54
R89	52
R90	52
R91	--
R92	60
R93	52
R94	56
R95	43
R96	119
R97	41
R98	38
R99	43

CAP	PL ITEM
C1	84
C2	84
C3	84
C4	92
C5	107
C6	76
C7	76
C8	94
C9	76
C10	92
C11	77
C12	79
C13	79
C14	75
C15	94
C16	95
C17	76
C18	75
C19	75
C20	85
C21	76
C22	75
C23	80
C24	96
C25	96
C26	82
C27	94
C28	102
C29	76
C30	81
C31	98
C32	124
C33	83
C34	--
C35	88
C36	86
C37	93
C38	76
C39	92
C40	76
C41	102
C42	--
C43	91
C44	--
C45	90
C46	76
C47	--

CAP	PL ITEM
C48	--
C49	--
C50	--
C51	--
C52	76
C53	--
C54	--
C55	76
C56	--
C57	--
C58	76
C59	--
C60	--
C61	--
C62	--
C63	--
C64	76
C65	--
C66	--
C67	--
C68	82
C69	82
C70	--
C71	76
C72	--

DIO	PL ITEM
CR1	29
CR2	29
CR3	29
CR4	29
CR5	29
CR6	29
CR7	29
CR8	29
CR9	29
CR10	--
CR11	31
CR12	31
CR13	31
CR14	31
CR15	31
CR16	--
CR17	29
CR18	80
CR19	31
CR20	114

IC	PL ITEM
U1	17
U2	16
U3	16
U4	19
U5	4
U6	5
U7	6
U8	13
U9	11
U10	17
U11	18
U12	7
U13	8
U14	6
U15	6
U16	10
U17	10
U18	8
U19	11
U20	--
U21	9
U22	9
U23	4
U24	12
U25	11
U26	10
U27	12
U28	13
U29	14
U30	15
U31	10
U32	4

RES MOD	PL ITEM
RM 1	20

REG	PL ITEM
VR1	74

IND	PL ITEM
L1	65
L2	65
L3	64
L4	64

CONN	PL ITEM
J1	22
J2	23
J3	116
J4	25
J5	24
J6	25
J7	100 101
J8	---

TSTR	PL ITEM
Q1	28
Q2	27
Q3	26
Q4	26
Q5	26

SW	PL ITEM
S1	32
S2	--
S3	122

X296a

Figure 5-3. Assembly and Parts List (Sheet 2 of 5)

Item No.	Part Number	Description	Remarks
4	15161600-0	IC 75461 Driver, Dual Peripheral	
5	66299100-9	IC 7410 Triple 3-Input NAND	
6	15158300-2	IC 7438 Quad 2-Input NAND Buffer (OC)	
7	15161300-7	IC 7405 Hex Inverter (Open Collector)	
8	66299099-3	IC 7400 Quad 2- Input NAND	
9	66299103-3	IC 7402 Quad 2-Input NOR	
10	15104301-5	IC 9602 MV, Dual Retrigger TTL	
11	96744156-9	IC 7474 TTL Dual D Type F/F	
12	88897000-1	IC 7408 TTL Quad 2-Input AND	
13	88885700-0	IC 7486 TTL Quad 2-Input Exclusive OR	
14	39389700-4	IC 7404 TTL Hex Inverter	
15	95794600-7	IC LM339 Comparator, Quad	
16	15163100-9	IC 733	
17	15161800-6	IC LM319 Comparator, Dual	
18	77832315-4	IC 3086 Transistor Array, 3 Single 1 current	
19	15161100-1	IC 78M12 Voltage Regulator	
20	95894500-8	Res Pac 220/330	
21	94260301-0	Socket 16 Pin	
22	94359504-1	Header Right Angle 3	
23	75772401-8	Connector Hdr	
24	75743719-9	Header-Right Angle	
25	75743717-3	Header-Right Angle	
26	77836043-8	Transistor T1P120	
27	77836044-6	Transistor T1P125	
28	77835186-6	Transistor 2N2907A	
29	51736700-9	Diode IN914A	
30	56142000-1	Diode-Silicon	
31	94616400-1	Diode	
32	83452205-4	Switch-8 Position	
35	94360400-9	Resistor 1/4W 1% 10.0K	
36	94360472-8	Res 1/4W 1% 56.2K	
37	94360388-6	Res 1/4W 1% 8.25K	
38	94360248-2	Res 1/4W 1% 316	
39	94360133-6	Res 1/4W 1% 22.1	
40	94360108-8	Res 1/4W 1% 12.1	
41	94360232-6	Res 1/4W 1% 215	
42	94360328-2	Res 1/4W 1% 1.96K	
43	94360300-1	Res 1/4W 1% 1.0K	
44	94360364-7	Res 1/4W 1% 4.64K	
45	94360429-8	Res 1/4W 1% 20.0K	
46	94360384-5	Res 1/4W 1% 7.50K	
47	94360304-3	Res 1/4W 1% 1.10K	
50	94360468-6	Res 1/4W 1% 51.1K	
51	94360448-8	Res 1/4W 1% 31.6K	

Figure 5-3. Assembly and Parts List (Sheet 3 of 5)

Item No.	Part Number	Description	Remarks
52	94360368-8	Res 1/4W 1% 5.11K	
54	94360268-0	Res 1/4W 1% 511	
55	94360436-3	Res 1/4W 1% 23.7K	
56	94360201-1	Res 1/4W 1% 102	
57	94360404-1	Res 1/4W 1% 11.0K	
58	94360517-0	Res 1/4W 1% 150K	
60	94360438-9	Res 1/4W 1% 24.9K	
61	94360200-3	Res 1/4W 1% 100	
63	94357500-1	Resistor Test Select	
64	75887607-2	Inductor 5% 100UH	
65	75887599-1	Inductor 5% 22 UH	
67	92577340-0	Res 1/4W 1% 2.61K	
68	24500135-9	Res 1/2W 5% 68	
69	24500115-1	Res 1/2W 5% 10	
70	24500172-2	Res 1/2W 5% 2.4K	
71	24504843-4	Res 2W 5% 150	
72	24507162-6	Res 1W 5% 910	
73	24507101-4	Res 1W 5% 10	
74	83452805-1	IC 78L12 AWC	Voltage Regulator
75	92496227-7	Cap 100V 20% 0.01UF	
76	94361400-8	Cap 50V +80 -20% 0.10UF	
77	94227247-7	Cap 100V 2% 750	
78	94360216-9	Res 1/4W 1% 147	
79	94227238-6	Cap 100V 2% 330	
80	77830567-2	Cap 25V +80 -20% 1.0UF	
81	75890977-4	Cap 100V 0.1UF	
82	75808537-7	Cap 100V 10% 0.01UF	
83	94227218-8	Cap 500V +/-1PF 47	
84	75808509-6	Cap 100V 10% 47	
85	24504346-8	Cap 100V 20% 4.7UF	
86	75808514-6	Cap 100V 10% 120	
88	75808529-4	Cap 100V 10% 2200	
89	51001119-0	Cap 25V +50 -30% 0.01UF	
90	17706718-8	Cap 10V 10% 33UF	
91	24505263-4	Cap 5V 10% 15UF	
92	24504310-4	Cap 6V 20% 4.7UF	
93	24505254-3	Cap 6V 10% 2.7UF	
94	24505237-8	Cap 35V 10% 4.7 UF	
95	75808549-2	Cap 100V 10% 0.10UF	
96	24504339-3	Cap 35V 20% 6.8UF	
98	24505235-2	Cap 35V 10% 3.3UF	
100	77600000-2	Right Angle Header	

Figure 5-3. Assembly and Parts List (Sheet 4 of 5)

Item No.	Part Number	Description	Remarks
101	77600002-8	Right Angle Header	
102	24504337-7	Cap 35V 20% 4.7UF	
103	10125103-1	Scr Nut-Hex Mach 4-4	
104	10126400-0	Washers Ext Tooth Lo	
105	93640012-6	Stud-Self Clinching	
107	75808517-9	Cap 100V 10% 220	
113	92498021-2	Terminal, Swaged	
114	77612009-9	Diode, 1N770	
115	94360438-0	Res 1/4W 1% 3.16K	
116	75743718-1	Header-Right Angle	
119	94360292-0	Res 1/4W 1% 909	
122	83452204-7	Switch - 7 Position	
124	38879326-7	Cap 50V 20% 0.68 UF	

Figure 5-3. Assembly and Parts List (Sheet 5 of 5)

6.1 INTRODUCTION

This section contains the instructions required to maintain the FDD. The information is provided in the form of preventive maintenance, troubleshooting and corrective maintenance.

6.2 MAINTENANCE TOOLS

The special tools (or equivalent) required to maintain an FDD are as follows:

DESCRIPTION	CDC PART NUMBER
Alignment Diskette (Optional)	Model 421-51W
Outer Stop Gauge	83401300
Inner Stop Gauge	83401400

The standard tools required to maintain the FDD are as follows:

- Socket Wrenches
  Sizes: 5/16" (7.94mm), 1/4" (6.35mm), 3/16" (4.76mm), 11/32" (8.73mm)
- Allen Wrenches
  Sizes: 0.050" (1.27mm), 1/16" (1.59mm), 5/64" (1.98mm), 7/64" (2.78mm)
- Oscilloscope, Tektronix 335, or equivalent.
- Feeler Gauges, wire
  Sizes: 0.030" (0.762mm), 0.058" (1.47mm), 0.060" (1.52mm), 0.062" (1.58mm), 0.072" (1.83mm).
- Feeler Gauge, Shim: 0.072" (1.83mm)
  0.010" (0.254 mm)

6.3 PREVENTIVE MAINTENANCE

The head load pad should be inspected after 650 hours of head-load time. If pad is worn, dirty, torn, or loose it should be replaced. (See paragraph 6.7.4).

6.4 HEAD CLEANING

On occasions the Read/Write head may require cleaning. If this situation occurs clean head as follows:

CAUTION

Do not smoke while cleaning. Do not touch a head surface with fingers. Do not leave residue or lint on the head surfaces. Residual particles can result in a scored disk and/or loss of a head.

Do not raise Head-Load Arm to the 90-degree position and then release it; damage to the Load-Arm Spring and/or to the Head (core and ceramics) could result.

a. Use lint-free cloth to lightly drybuff head surface. Cleaning is completed if deposits are removed.

b. If oxide deposits were not removed in step (a), dampen (do not soak) cloth with cleaning solution (91% isopropyl alcohol) and wipe head surface. Finish by lightly dry buffing again to ensure that the head is dry and no alcohol residue is left.

6.5 TROUBLESHOOTING

An improperly adjusted FDD may exhibit symptoms of one that has a malfunction; therefore, the Adjustment Procedures (paragraph 6.6) should be performed before assuming that the unit has failed. If the malfunction still exists after the performance of the adjustment procedures, consult Table 6-1 and the Troubleshooting Flow Charts for the symptoms observed, checks to be made, and action to be taken. Refer to Figure 6-1 for test points. Before troubleshooting is started, check all DC supply voltages.

Table 6-1. Flowchart Reference

Flowchart Paragraph No.	Symptoms
6.5.2	Diskette Not Rotating
6.5.3	Read Signal Missing
6.5.4	Drive Not Responding to Commands
6.5.5	Index Pulse Missing
6.5.6	Head Not Loading
6.5.7	Read/Write Head Stepping
6.5.8	No Track 00 Indication
6.5.9	Read Errors
6.5.10	Write Errors
6.5.11	Write Protect Inoperative

6.5.1 DC VOLTAGE AND SIGNAL CHECK

a. Input power should be +5VDC ±5% and +24VDC ±10% measured at the input to the FDD (refer to paragraph 3.4.2).

b. Test Points: The signals at the test points should conform to the various diagrams and waveforms as listed:

Test Point No.	Refer to Fig. No.	Comments
1	5-1	Differentiated Analog
2	5-1	Read Data (Differential)
3	5-1, 6-2, 6-3	Analog Read Data
4	5-1, 6-2, 6-3	(Differential)
5	5-1, 6-4	Write flip flop
6	- - -	Not for Field Use*
7	5-1	Stepper One-Shot
8	5-1	+Composite Read Data
9	5-1	Stepper Steering Logic

*Erase current should be 80mA typically into J2-03 when the FDD is write enabled.

b. -contd.

Test Point No.	Refer to Fig. No.	Comments
10	5-1	Stepper Steering Logic
11	---	Not for Field Use**
12	---	Not Used
13	---	Not Used
14	5-1	Index

c. Signals should conform to Figure 5-1 and Figures 6-1 through 6-4.

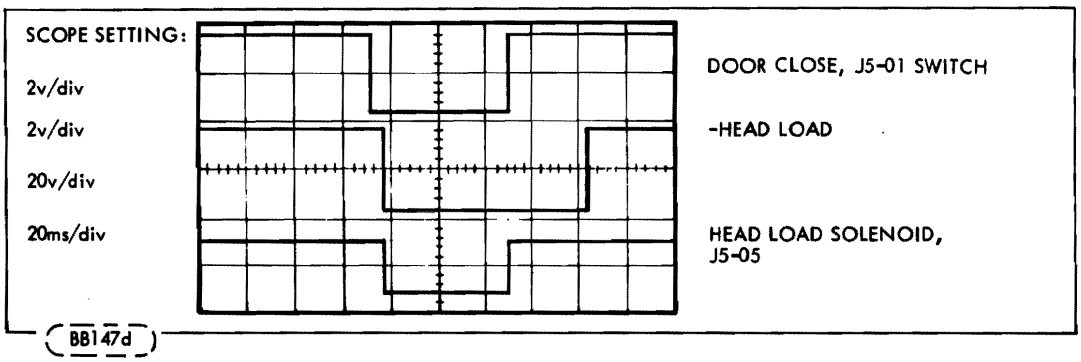

Figure 6-1. -Head Load and Door Interlock Switch

**A Write Fault should occur when the FDD is Write Enabled and no Write Data is sent.

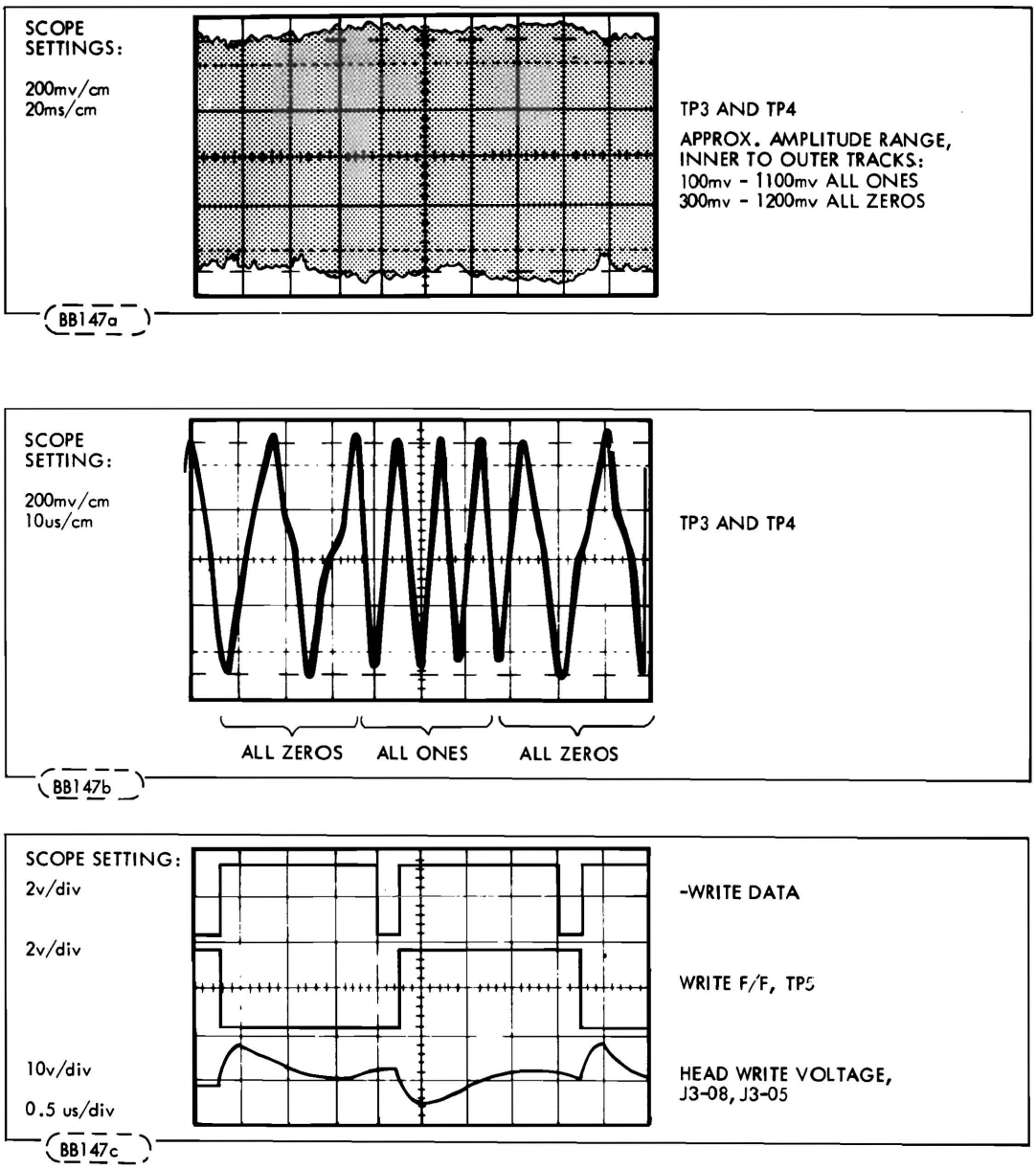

Figure 6-4. Write Data, Write F/F Output, and Head Write Voltage for Outer Track

6.5.2 DISKETTE NOT ROTATING

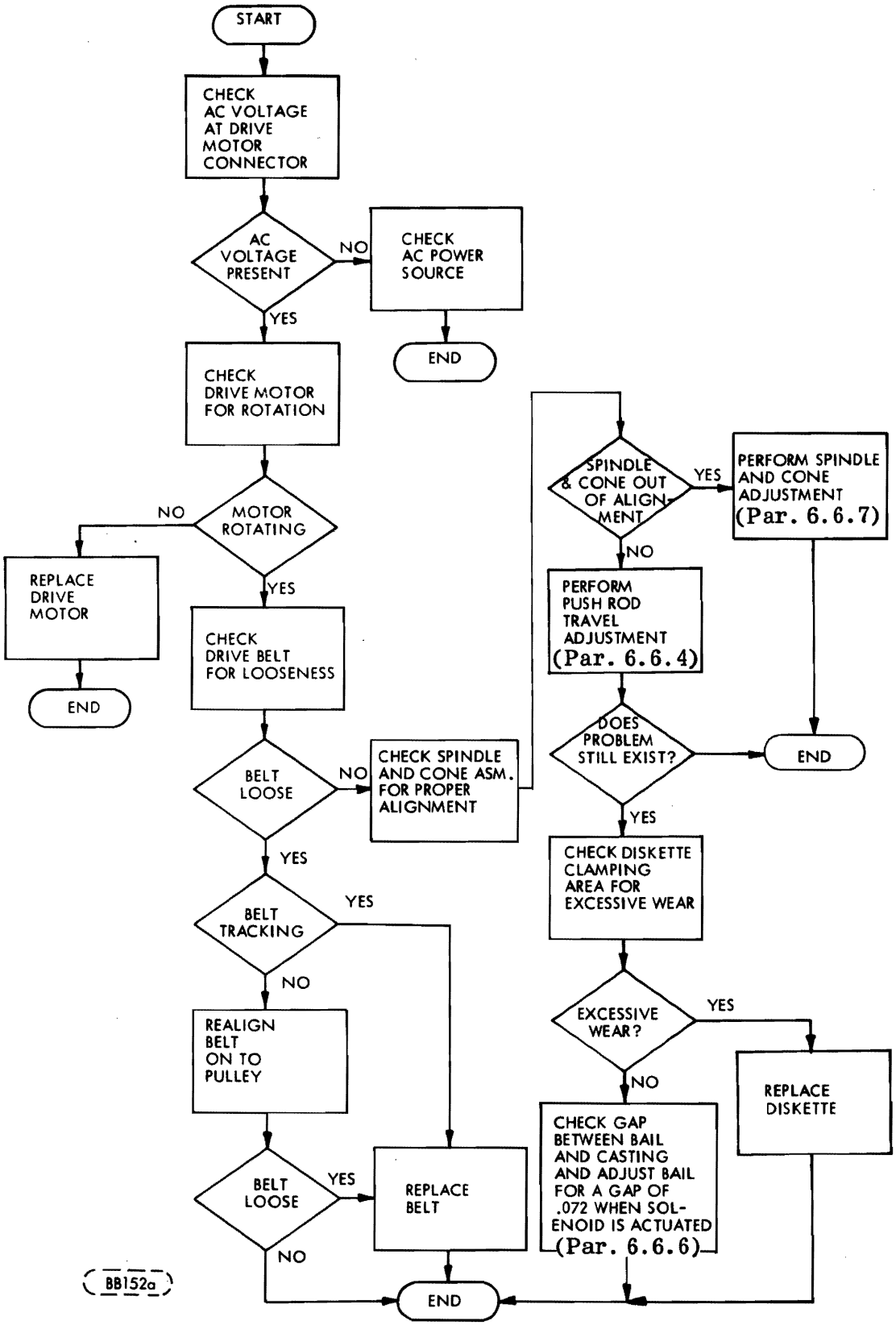

6.5.3 READY SIGNAL MISSING (Daisy Chain Units)

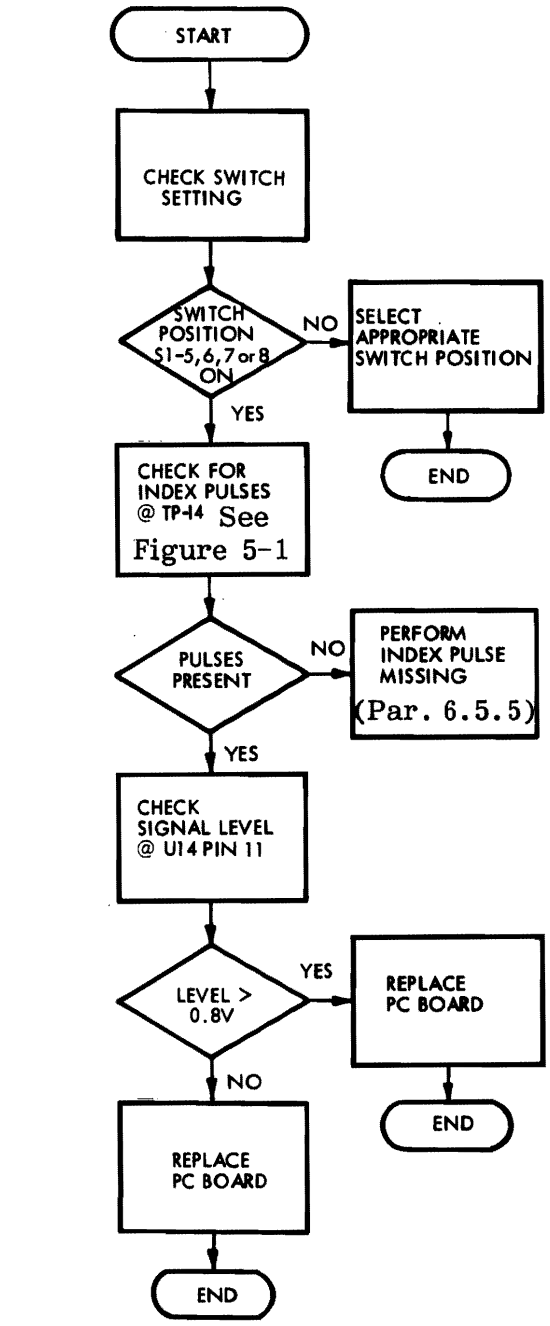

6.5.4 DRIVE NOT RESPONDING TO COMMANDS (Daisy Chain Units)

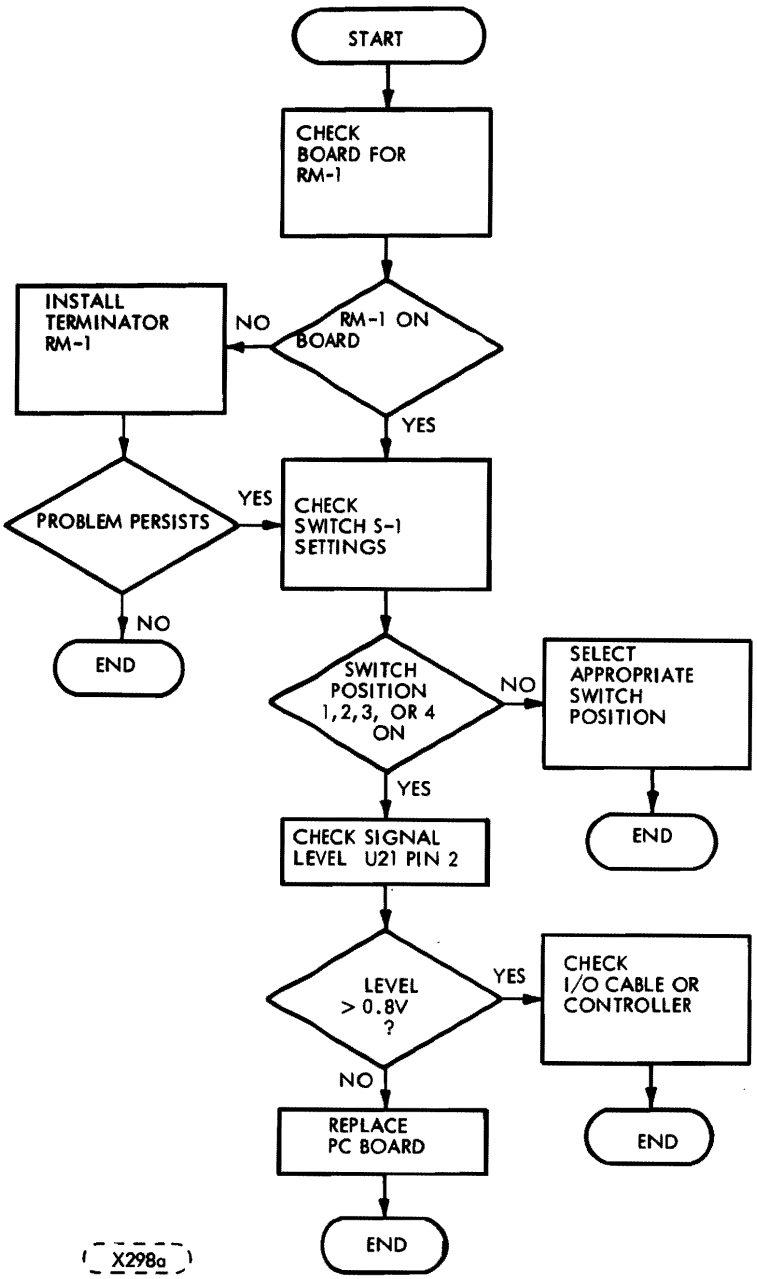

6.5.5 INDEX PULSE MISSING

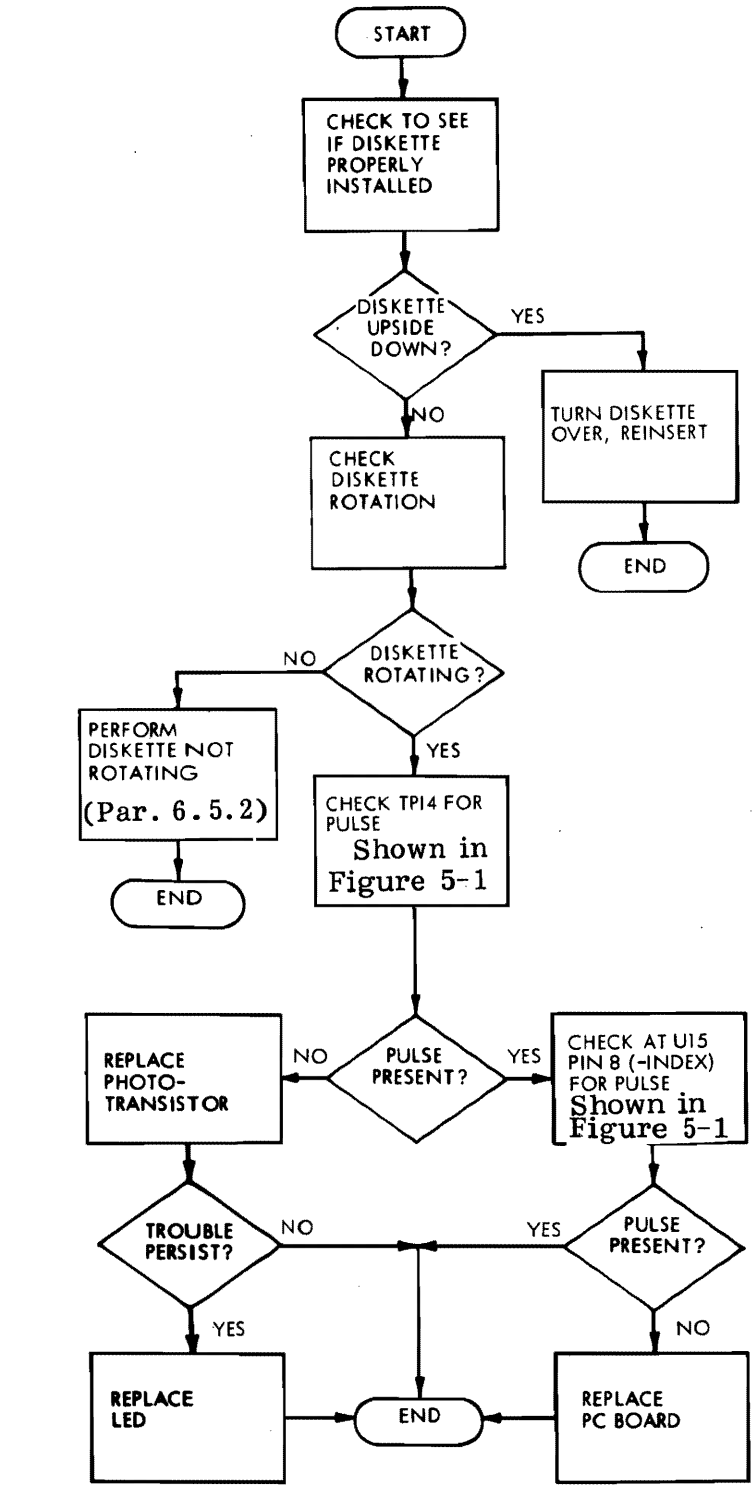

6.5.6 HEAD NOT LOADING

(Perform procedure 6.5.4 prior to performing this trouble shooting procedure).

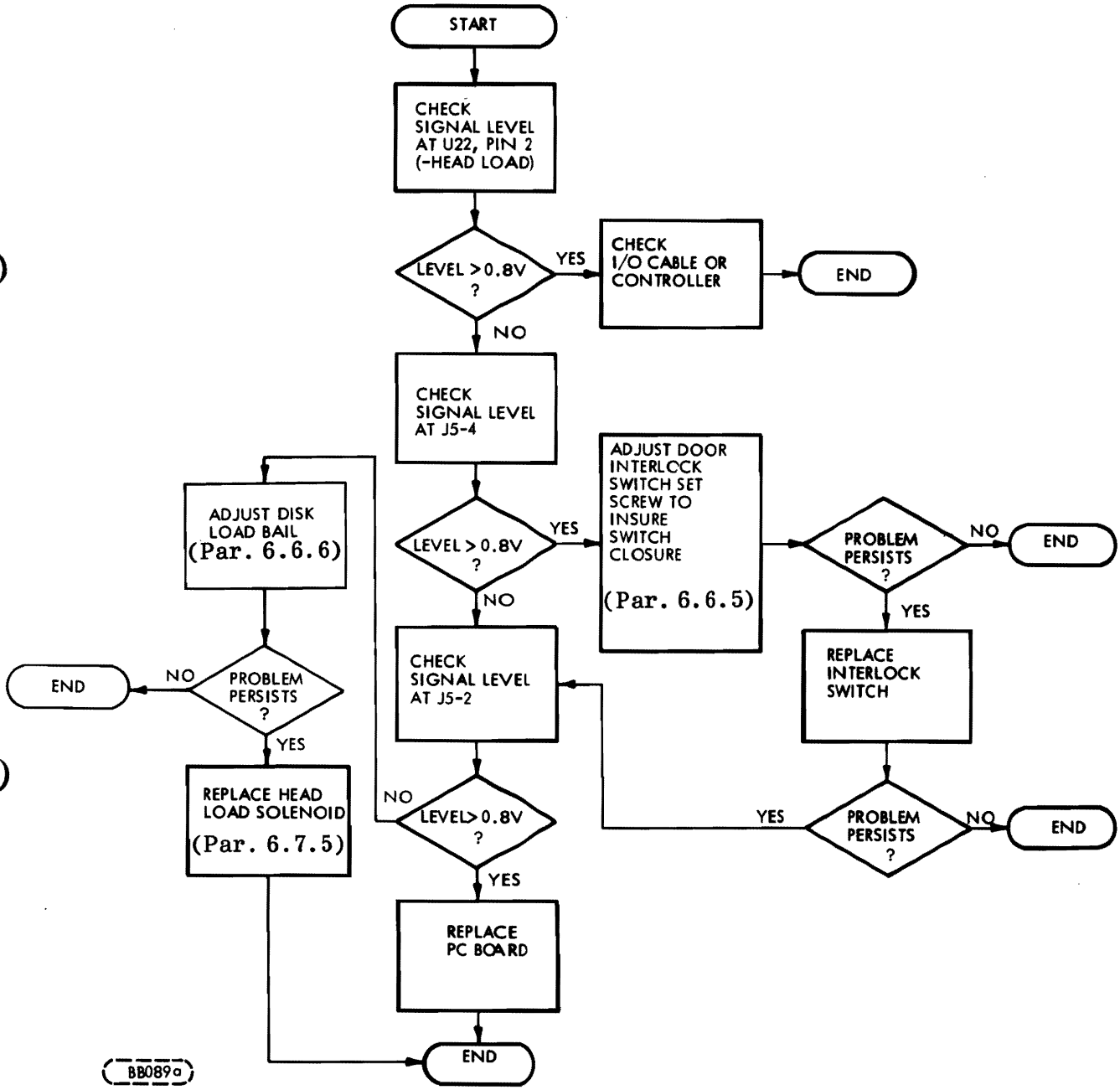

6.5.7 READ/WRITE HEAD NOT STEPPING

Refer to 6.5.4 prior to starting this trouble shooting procedure.

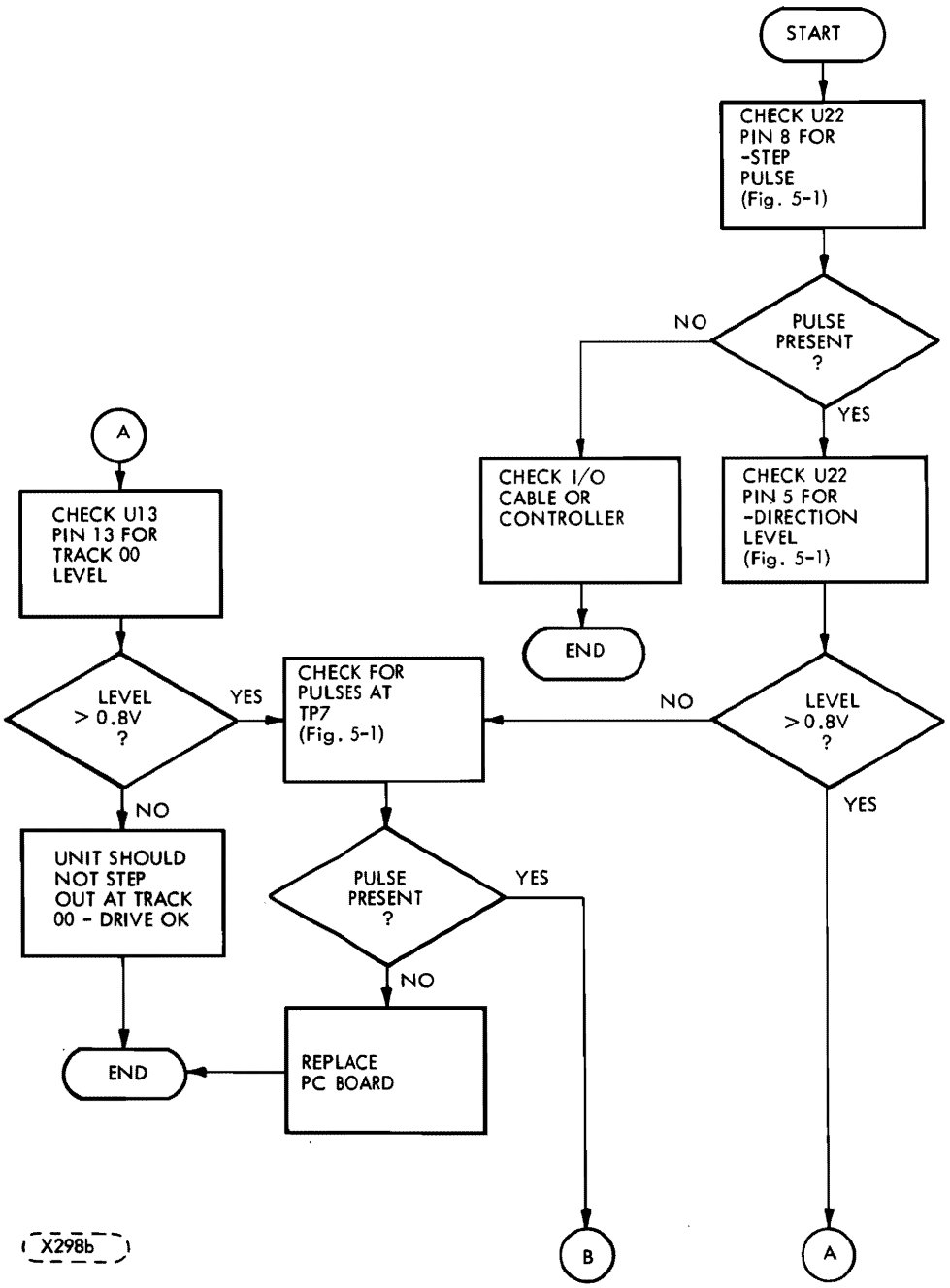

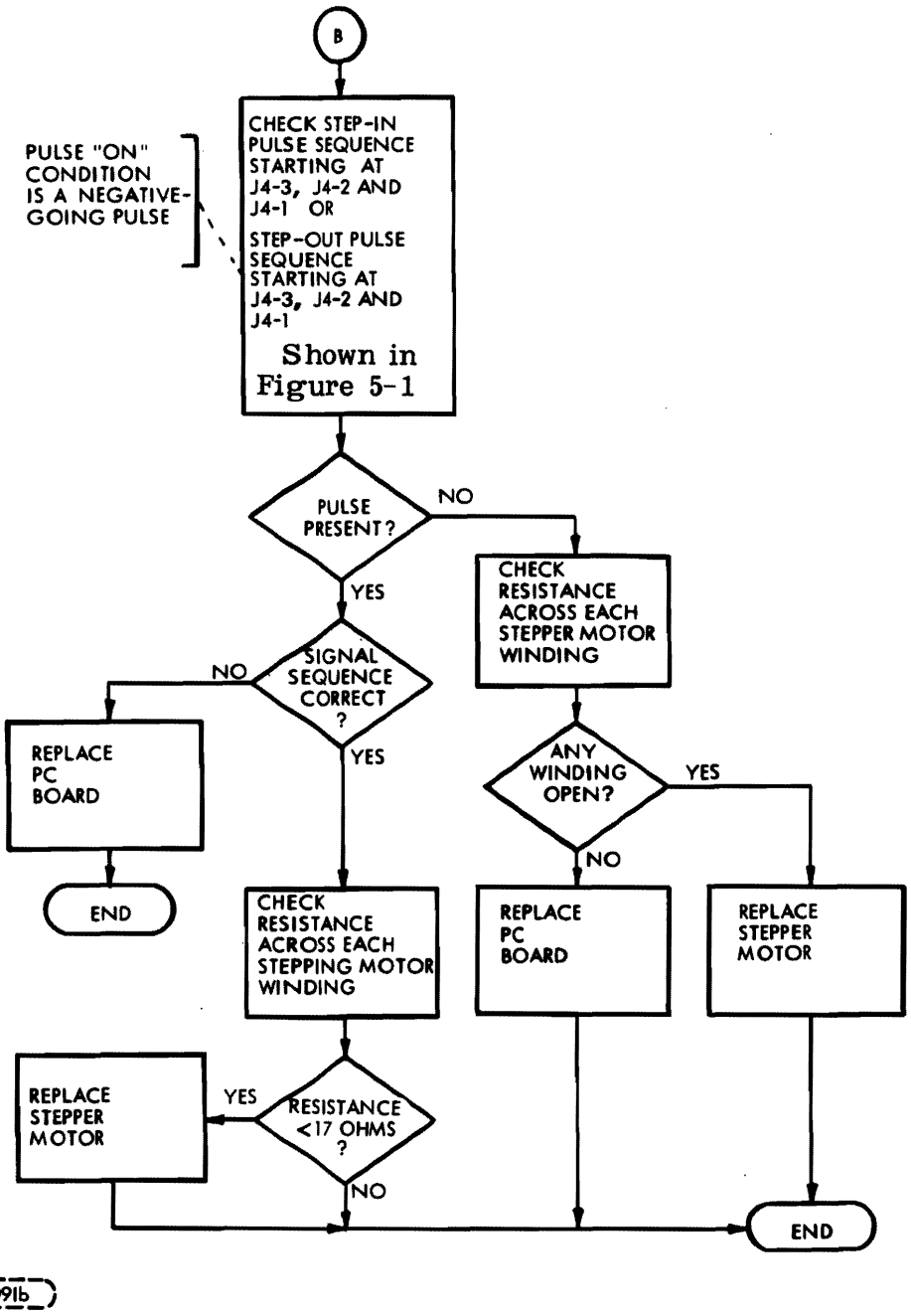
B
CHECK STEP-IN PULSE SEQUENCE STARTING AT J4-3, J4-2 AND J4-1 OR
STEP-OUT PULSE SEQUENCE STARTING AT J4-3, J4-2 AND J4-1
Shown in Figure 5-1
PULSE "ON" CONDITION IS A NEGATIVE-GOING PULSE
PULSE PRESENT?
NO
YES
CHECK RESISTANCE ACROSS EACH STEPPER MOTOR WINDING
SIGNAL SEQUENCE CORRECT ?
NO
YES
REPLACE PC BOARD
END
ANY WINDING OPEN?
YES
NO
CHECK RESISTANCE ACROSS EACH STEPPING MOTOR WINDING
REPLACE PC BOARD
REPLACE STEPPER MOTOR
REPLACE STEPPER MOTOR
YES
RESISTANCE <17 OHMS ?
NO
END
BB091b

6.5.8 NO TRACK '00' INDICATION

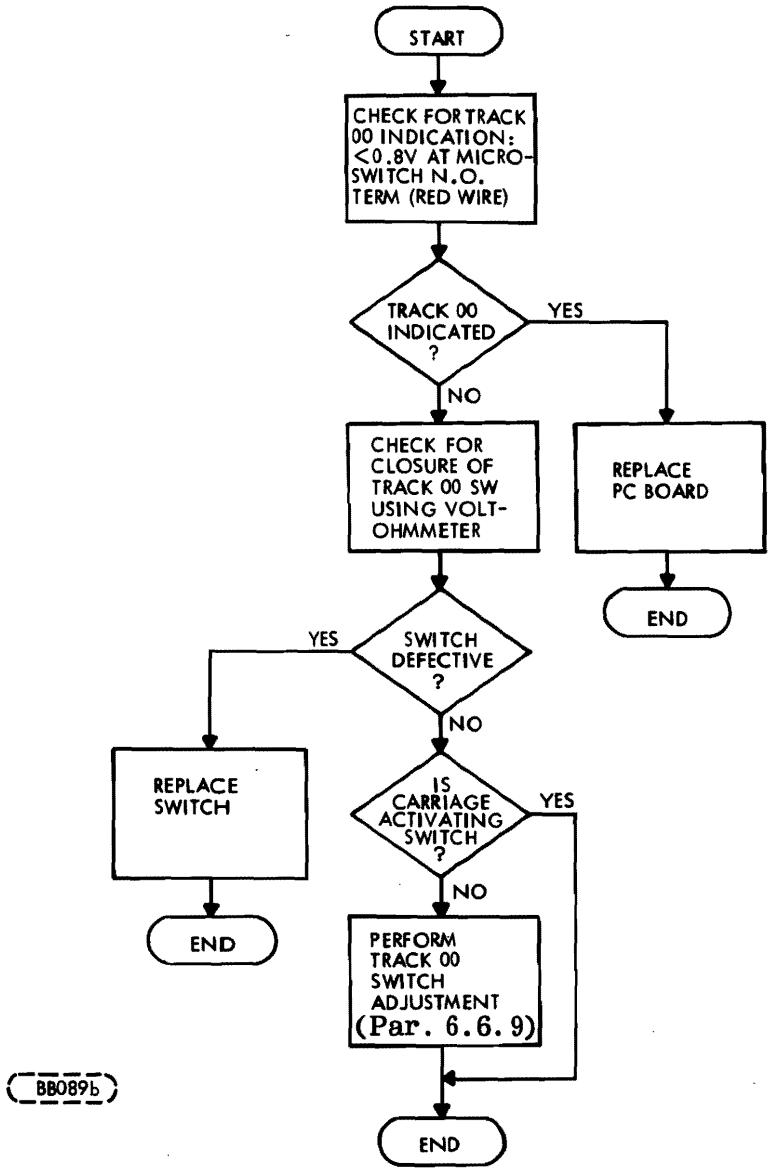

6.5.9 READ ERRORS

Refer to 6.5.4 prior to starting this trouble shooting procedure.

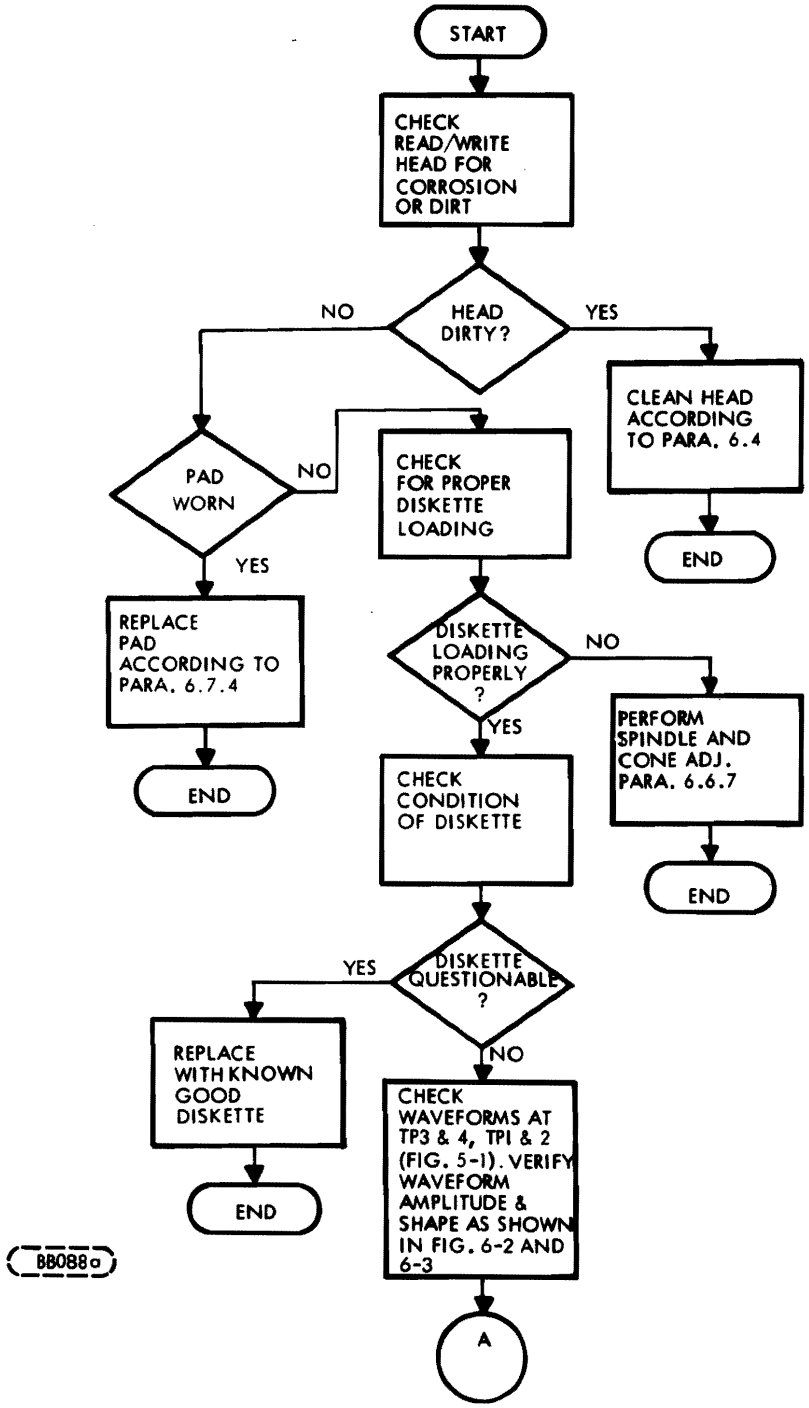

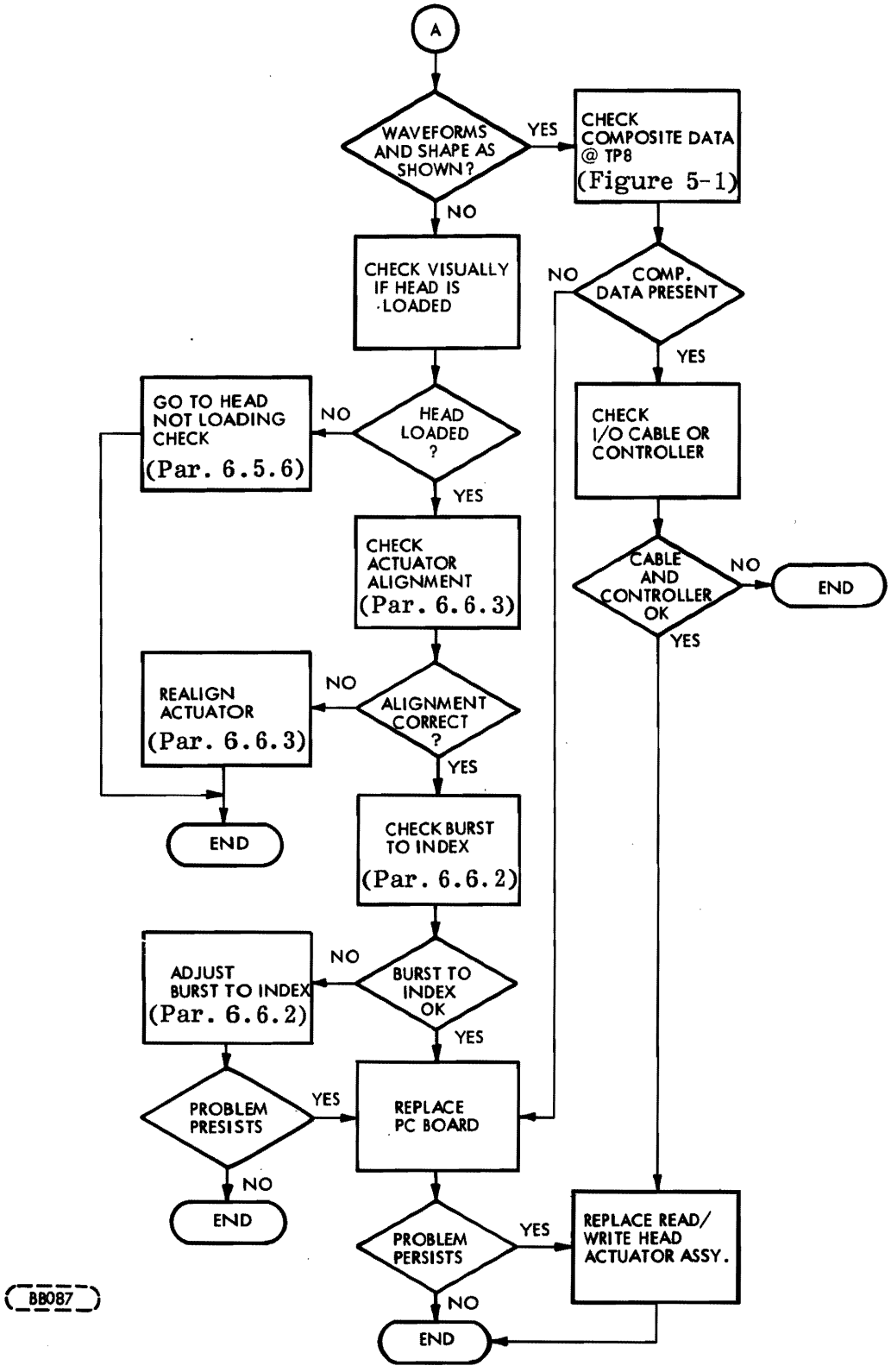
A
WAVEFORMS AND SHAPE AS SHOWN?
YES
CHECK COMPOSITE DATA @ TP8 (Figure 5-1)
NO
CHECK VISUALLY IF HEAD IS LOADED
NO
COMP. DATA PRESENT
YES
GO TO HEAD NOT LOADING CHECK (Par. 6.5.6)
NO
HEAD LOADED ?
YES
CHECK I/O CABLE OR CONTROLLER
CHECK ACTUATOR ALIGNMENT (Par. 6.6.3)
CABLE AND CONTROLLER OK
NO
END
YES
REALIGN ACTUATOR (Par. 6.6.3)
NO
ALIGNMENT CORRECT ?
YES
END
CHECK BURST TO INDEX (Par. 6.6.2)
ADJUST BURST TO INDEX (Par. 6.6.2)
NO
BURST TO INDEX OK
YES
PROBLEM PRESISTS
YES
REPLACE PC BOARD
NO
END
PROBLEM PERSISTS
YES
REPLACE READ/ WRITE HEAD ACTUATOR ASSY.
NO
END
BB087

6.5.10 WRITE ERRORS

Refer to 6.5.4 prior to starting this trouble shooting procedure.

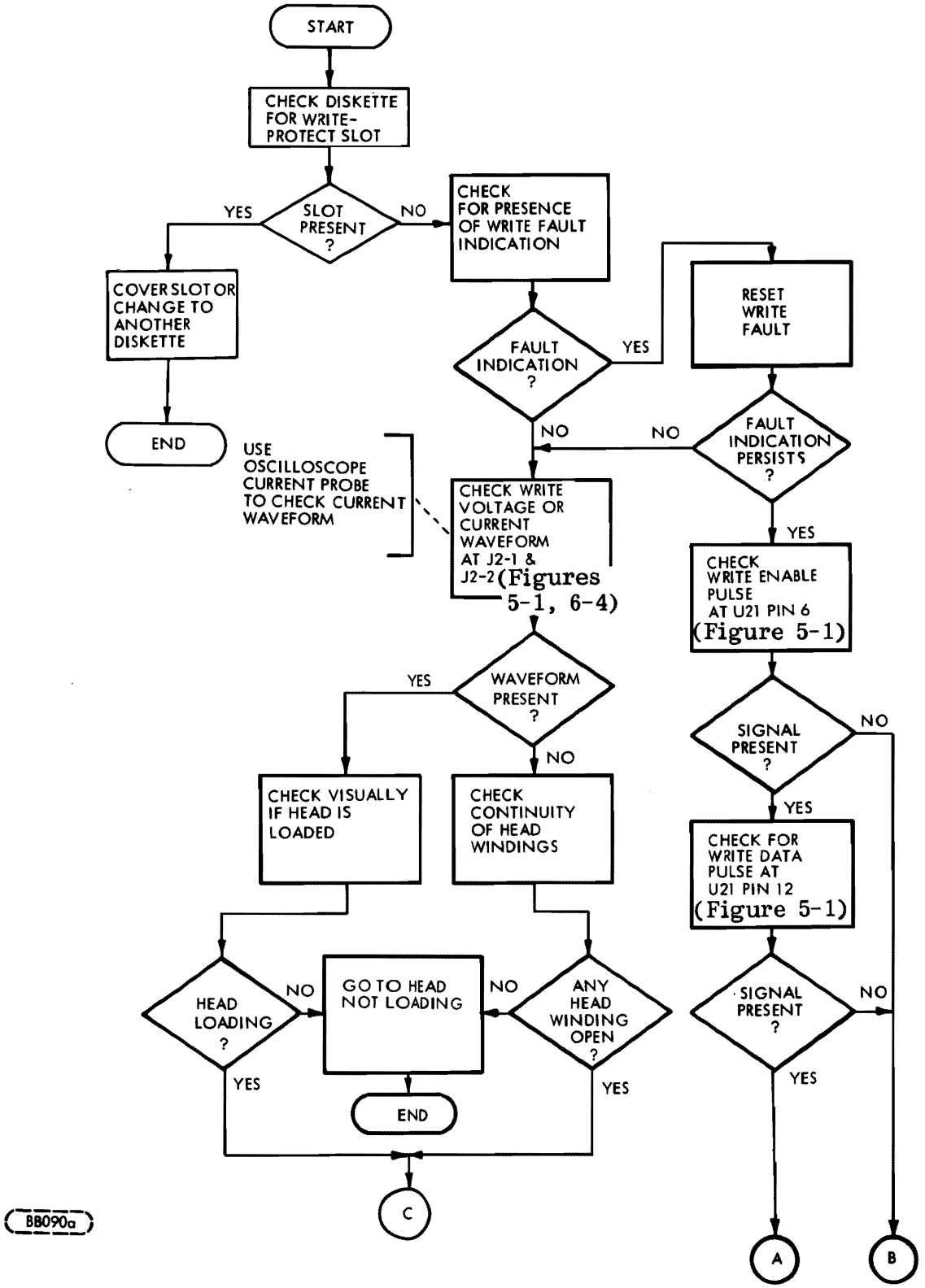

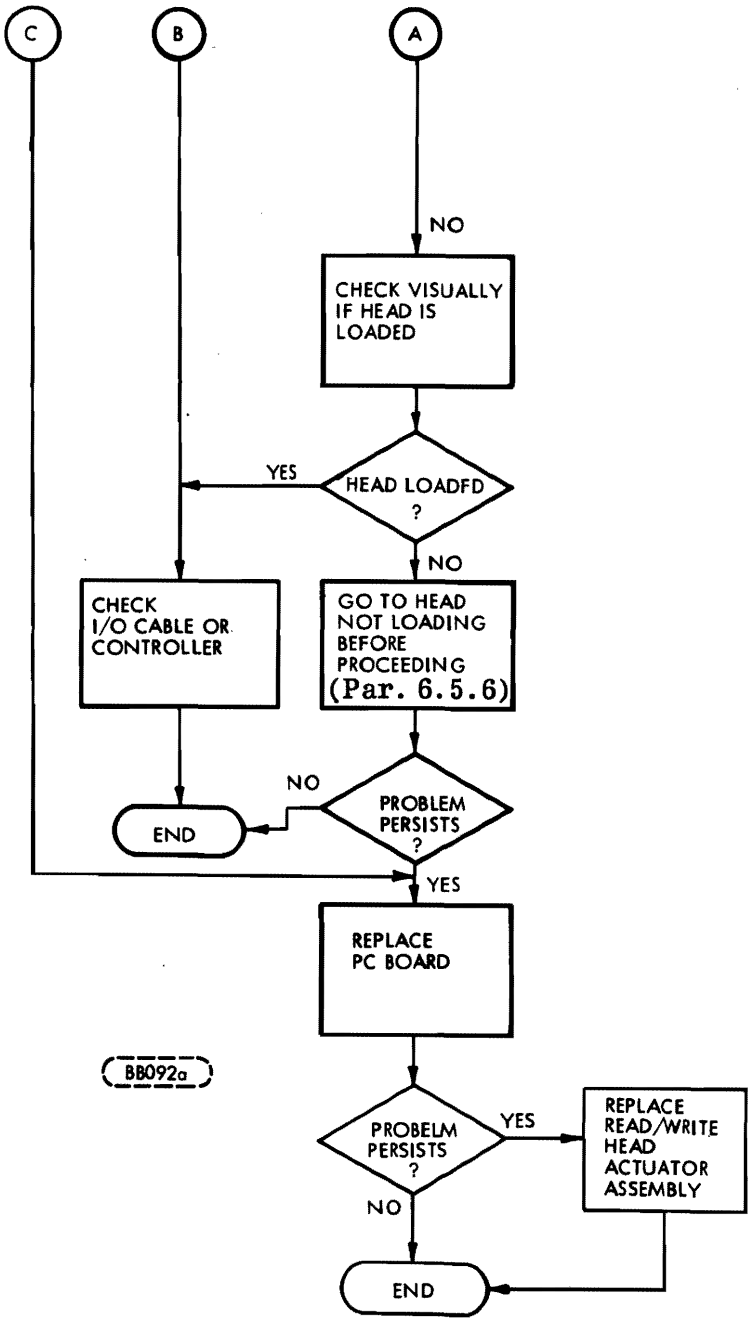
C
B
A
NO
CHECK VISUALLY IF HEAD IS LOADED
YES
HEAD LOADFD ?
NO
CHECK I/O CABLE OR CONTROLLER
GO TO HEAD NOT LOADING BEFORE PROCEEDING (Par. 6.5.6)
NO
PROBLEM PERSISTS ?
END
YES
REPLACE PC BOARD
BB092a
PROBELM PERSISTS ?
YES
REPLACE READ/WRITE HEAD ACTUATOR ASSEMBLY
NO
END

6.5.11 WRITE PROTECT INOPERATIVE

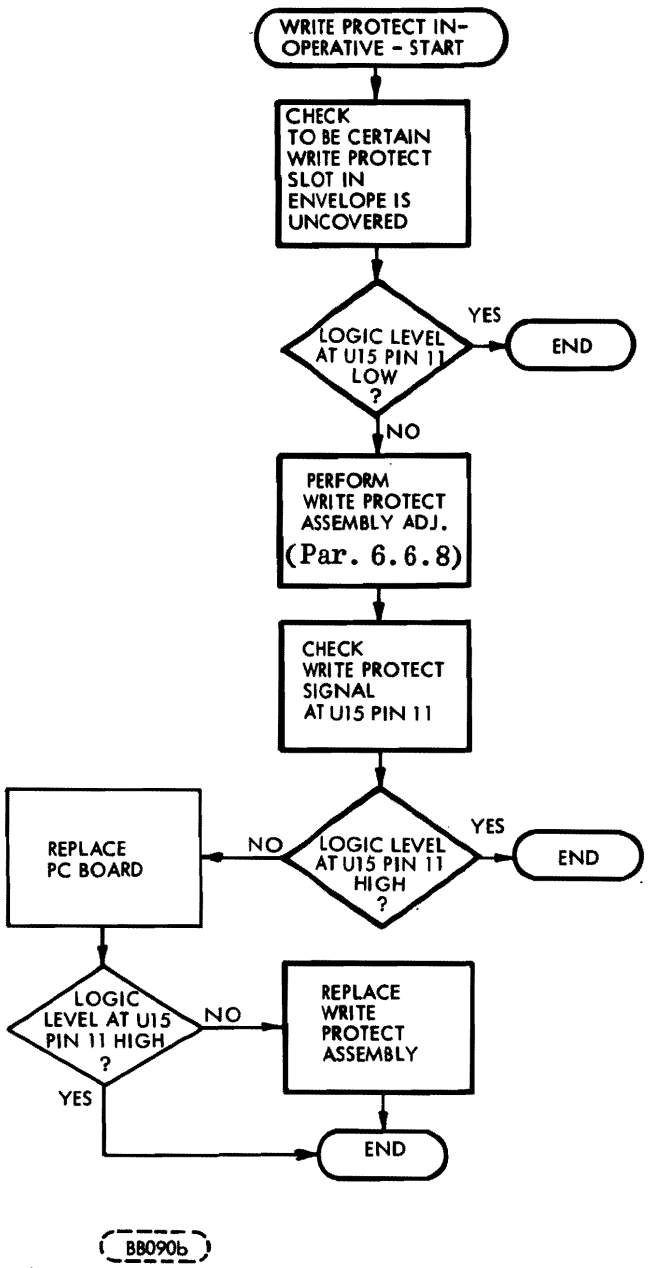

6.6 ADJUSTMENT PROCEDURES

6.6.1 CARRIAGE-STOP ADJUSTMENT

This procedure must be performed whenever actuator alignment or Track 00 adjustment has been performed.

Visually inspect the head-carriage assembly and determine that it comprises either black plastic carriage stops as shown in Figure 6-6a, or a metal carriage-stop assembly mounted on the carriage guide bar as shown in Figure 6-6b. To adjust the plastic carriage stops (Figure 6-6a), follow the procedure given in 6.6.1.1. To adjust the metal carriage-stop assembly (Figure 6-6b), follow the procedure given in 6.6.1.2.

6.6.1.1 Plastic Carriage-Stop Assembly

a. Place outer stop gauge (CDC P/N 83401400) against carriage as own in Figure 6-6a.

b. Loosen outer carriage stop screw (see Figure 6-6a) and move outer stop until tooth contacts stop gauge as shown in Figure 6-6a. Tighten stop screw and remove gauge.

c. Step Read/Write head to Track 76.

d. Place inner stop gauge (CDC P/N 83401300) against carriage as shown in Figure 6-6a.

e. Loosen inner stop screw (see Figure 6-6a) and move inner stop until it contacts stop gauge as shown in Figure 6-6a. Tighten stop screw and remove gauge.

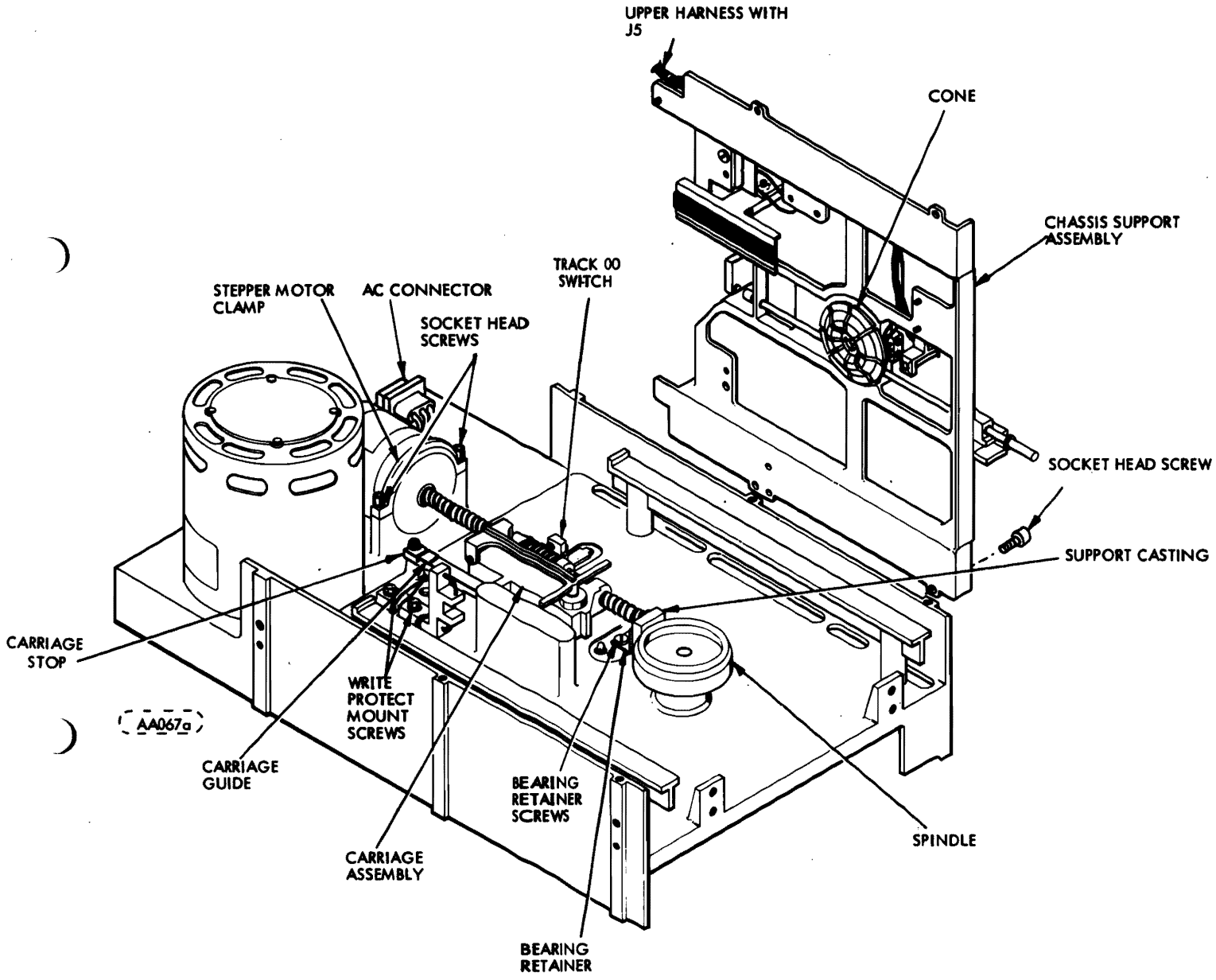

Figure 6-5. Base and Chassis Support Assembly

6.6.1.2 Metal Carriage-Stop Assembly

This procedure must be performed whenever actuator alignment or Track 00 adjustment has been performed.

a. As shown in Figure 6-6b, using a 0.020-inch shim, adjust outer (rear) stop clearance beyond track 00 and tighten rear screw, torque to 8-10 inch-lbs.

b. Rotate the motor shaft manually to check for interference.

6.6.2 BURST TO INDEX CHECK AND ADJUSTMENT

The Alignment Diskette is used to perform this procedure.

a. Precondition the alignment diskette (421-51W) by allowing it to reach room temperature for one hour.
b. Install the alignment diskette.

CAUTION

The Alignment Diskette is for read only. Extreme caution should be used to assure this diskette is not written on.

c. Seek to Track Zero, then seek to Track One and Read. (No data is recorded on Track One.)

d. Connect Channel 1 of scope to TP3 on the PWA, Channel 2 to Index TP14 of the PWA. Set up the scope as follows:

Chan 1 Volt/Div to: 0.1 volt/div
Chan 2 Volt/Div to: 2 volt/div

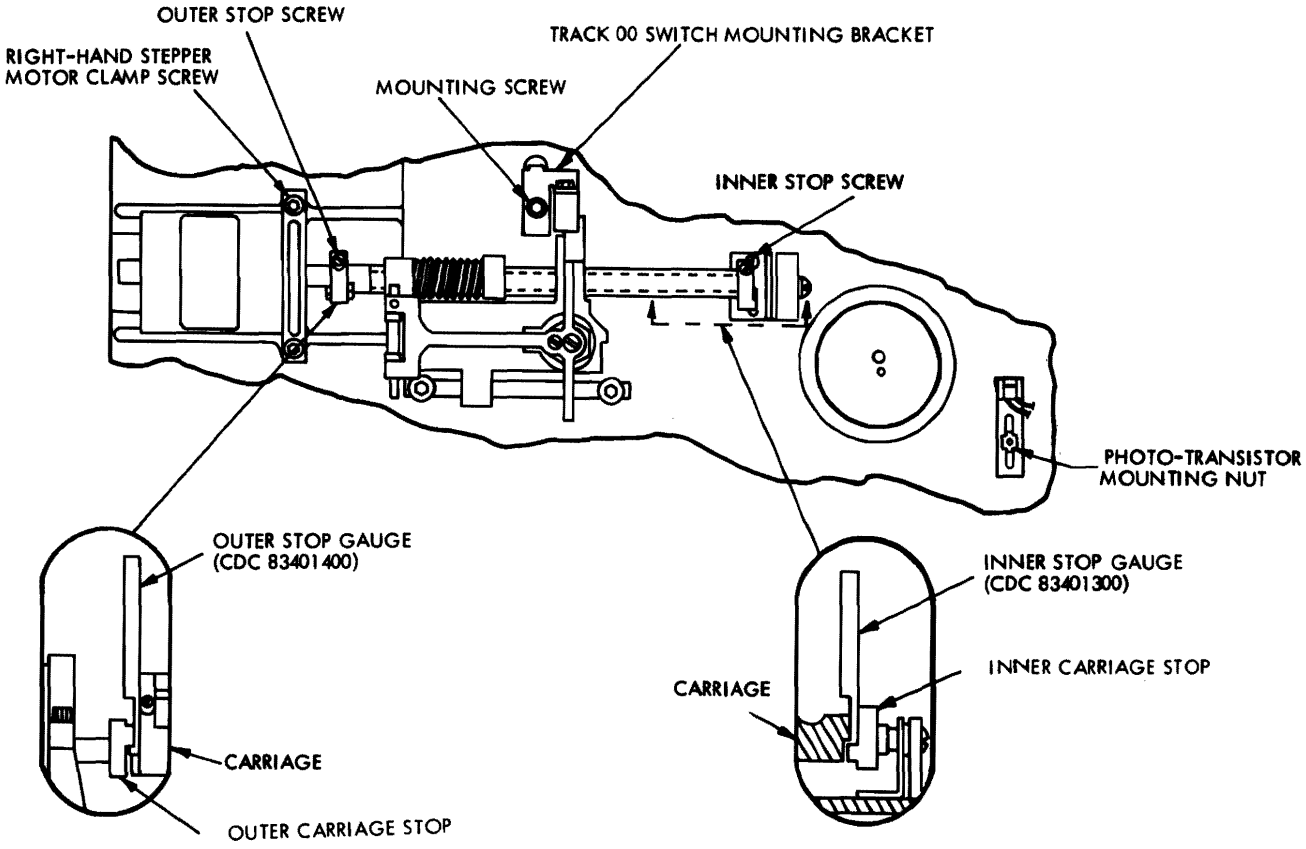

(D144b)

a. Plastic Carriage-Stop and Stop-Gauge Assemblies

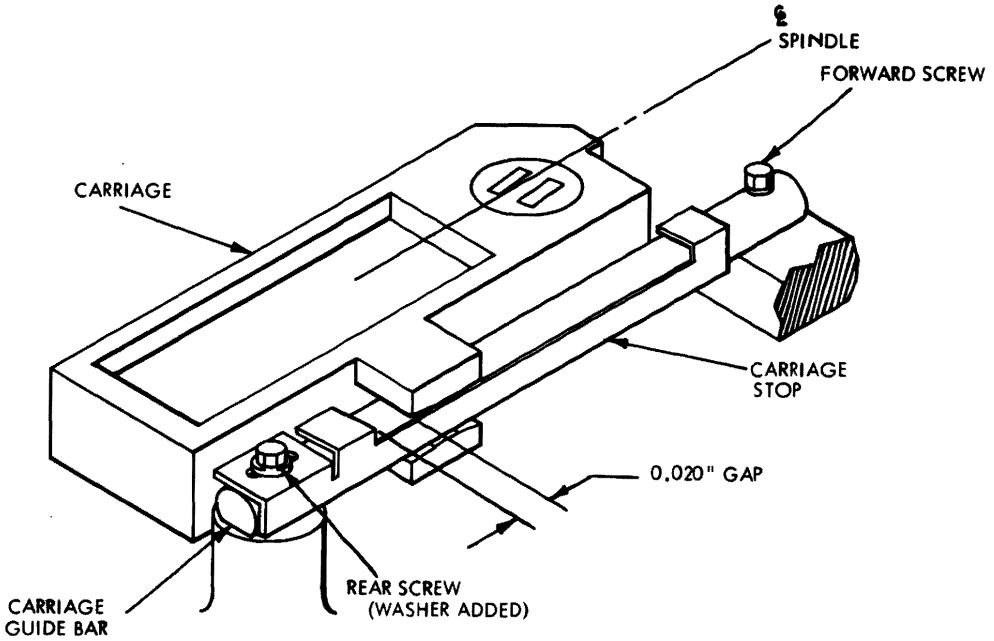

(X327a)

b. Metal Carriage-Stop Assembly

Figure 6-6. Carriage-Stop Adjustment

d. -contd.

Chan 1 voltage to: AC	Source to: Chan 1
Chan 2 voltage to: AC	Coupling to: Low Freq. (Hi Freq. Reject)
Vert. Mode to: Add	Trig. Mode to: Normal
Slope (Sync) to: Pos.	Time Base to: 50µs/div

e. Adjust the time from write splice bit to the leading edge of the index pulse until it measures per Table 6-2. (Refer to Figure 6-7 to adjust the write splice to index time, loosen the Allen head screw holding the phototransistor located on bottom of chassis toward the front of the unit.) Using the adjustment handle protruding through the casting, move the phototransistor until the specification is met. Tighten the Allen screw while observing the scope signal. Verify that the adjustment did not change. If the adjustment cannot be achieved, it may be necessary to adjust the LED sensor located on the top plate assembly.

f. After the adjustment has been made and specification met, change the scope time base to 0.5ms/div and verify that the index pulse width measures 1.5 ±0.7ms (from 0.8ms to 2.2ms). If the index pulse width is not within specification, adjust the LED sensor located onthe top plate assembly. If the pulse width cannot be adjusted to meet specification, the sensor assembly or PWA must be replaced and steps "a" through "f" repeated.

g. All scope settings are to remain as defined in the original setup in step "d", but it may be necessary to slightly adjust the sync. Seek to track 00 then seek to track 1 and perform a read. While observing the signal on the signal ont he scope, remove and reinsert the diskette three times.

After each insertion, verify that the change in the time from write splice to leading edge of index is less than 50 µs. If the change is greater than 50 µs, the cone and spindle must be aligned or replaced (see section 6.6.7) and steps "a" through "g" repeated.

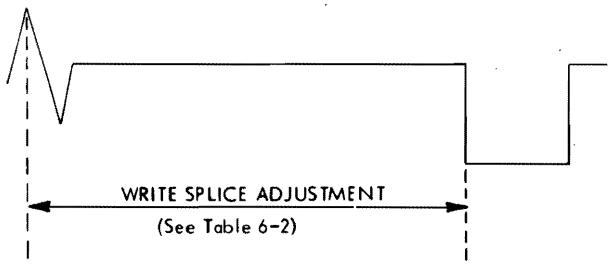

AA036c

Figure 6-7. Write-Splice-Bit-to-Index Timing

Table 6-2. Write Splice Adjustment

CONFIG. REF. NO.	WRITE SPLICE ADJ. (µs)
603	450 ± 100

6.6.3 ACTUATOR ALIGNMENT (Diskette)

Unit must be horizontal during alignment (that is, PWA nearest to bench top and parallel with bench top).

The Alignment Diskette is used to perform this procedure. Install jumper from U26 Pin 7 to ground.

a. Alignment Diskette 421-51W shall be preconditioned by allowing it to reach room temperature for one hour.

b. Install the alignment diskette.

CAUTION

The alignment diskette is for read only. Extreme caution should be used to assure this diskette is not written on.

c. Step to track 38 (00100110) and perform a read. (No data is recorded on track 38. The tester or system requirements should be noted; refer to tester or system instructions for operation.)

d. Connect Channel 1 of scope to TP3 on the PWA and Channel 2 to TP4 on the PWA.

e. Connect the external sync probe to index at TP14 on PWA.

f. Set up the scope as follows:

Channel 1: volts/div to: 0.1 volts/div
Channel 2: volts/div to: 0.1 volts/div (inverted)
Channel 1: input to: AC
Channel 2: inputs to: AC

Vertical Mode to: Add
Slope (Sync) to: Positive
Trigger Source to: External
Trigger Coupling to: Low Frequency (High Frequency Reject)
Trigger Mode to: Normal
Time Base to: 20 msec/div

NOTE

Scope trace after trigger level is adjusted for repetitive trace should display an ervelope of data "Cateyes" consisting of two lobes (refer to Figure 6-8 A). If no such pattern can be displayed, manually turn the stepper motor shaft extending from the rear of the stepper motor one-quarter turn either way to locate pattern. Then proceed to step "h".

g. Change the volts/div of Channel 1 and Channel 2 to 0.02 volts/div. Move the trace on the scope (Position Knob) up until the bottom of the two lobes are setting approximately on the base line (refer to Figure 6-8 B). For an acceptably aligned unit, the voltage ratio of the smaller lobe to the larger lobe should exceed 80%.

h. If not in alignment, loosen the stepper motor clamp mounting screws to where a gap exists between the clamp and casting (see Figure 6-9) and slowly rotate the stepper motor to adjust the amplitude until the amplitude of both lobes is the same, that is, the difference between the bottoms of both lobes is less than 5mV.

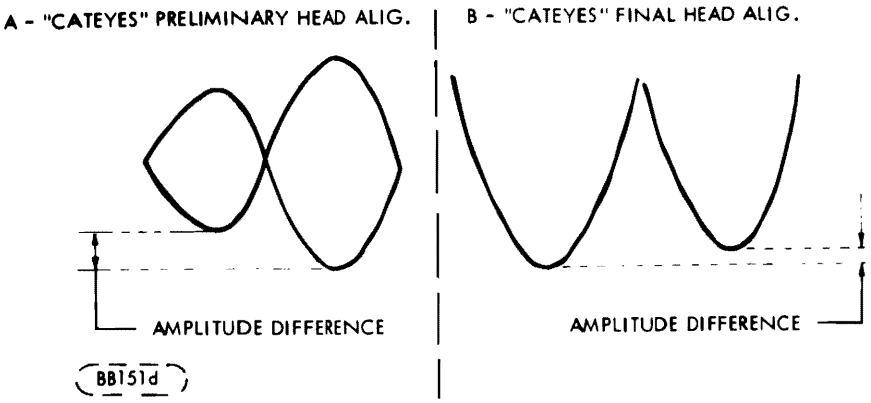

Figure 6-8. Head Alignment Amplitude

i. Tighten the stepper motor clamp. Return to track 00, then seek back to track 38. Verify that the 5mv specification is still met. If the specification is not met, readjust the stepper motor, return to zero and seek back to track 38. Repeat the adjustment until the 5mv specification is met.

j. Remove alignment diskette.

k. Perform Track 00 Switch Adjustment Paragraph 6.6.9.

l. Perform Stop Gauge Adjustment per Paragraph 6.6.1.

m. Recheck all adjustments made in this procedure and repeat all steps having out-of-tolerance indications.

6.6.4 PUSH-ROD-TRAVEL ADJUSTMENT

This procedure must be performed whenever chassis support (Figure 6-9) is removed and replaced.

a. With front panel door closed, verify that a gap exists between the retaining ring and the disk load bushing of approximately 0.030 inch (0.762mm) (refer to Fig. 6-9). Perform steps b and c if out of adjustment.

b. Back-off the Door Interlock Switch Adjustment set screw.

c. Adjust disk load arm set screw (Figure 6-9) until gap is approximately 0.030 in. (0.762mm), with door closed.

d. Proceed to Door Interlock Switch Adjustment (paragraph 6.6.5)

6.6.5 DOOR-INTERLOCK-SWITCH ADJUSTMENT

This procedure must be performed whenever the Push-Rod-Travel-Adjustment procedure is performed.

a. Verify that interlock switch closes (when closing the door) prior to the door latching. Perform step (b) if switch and door are out of sync.

b. With door closed, adjust set-screw at end of disk-load arm (Figure 6-9) while holding door closed against metal stop. Adjust set-screw until micro switch is almost adjusted flush to top of switch case. This ensures that as the nylon tips on the push-rod wear down, the switch will still close.

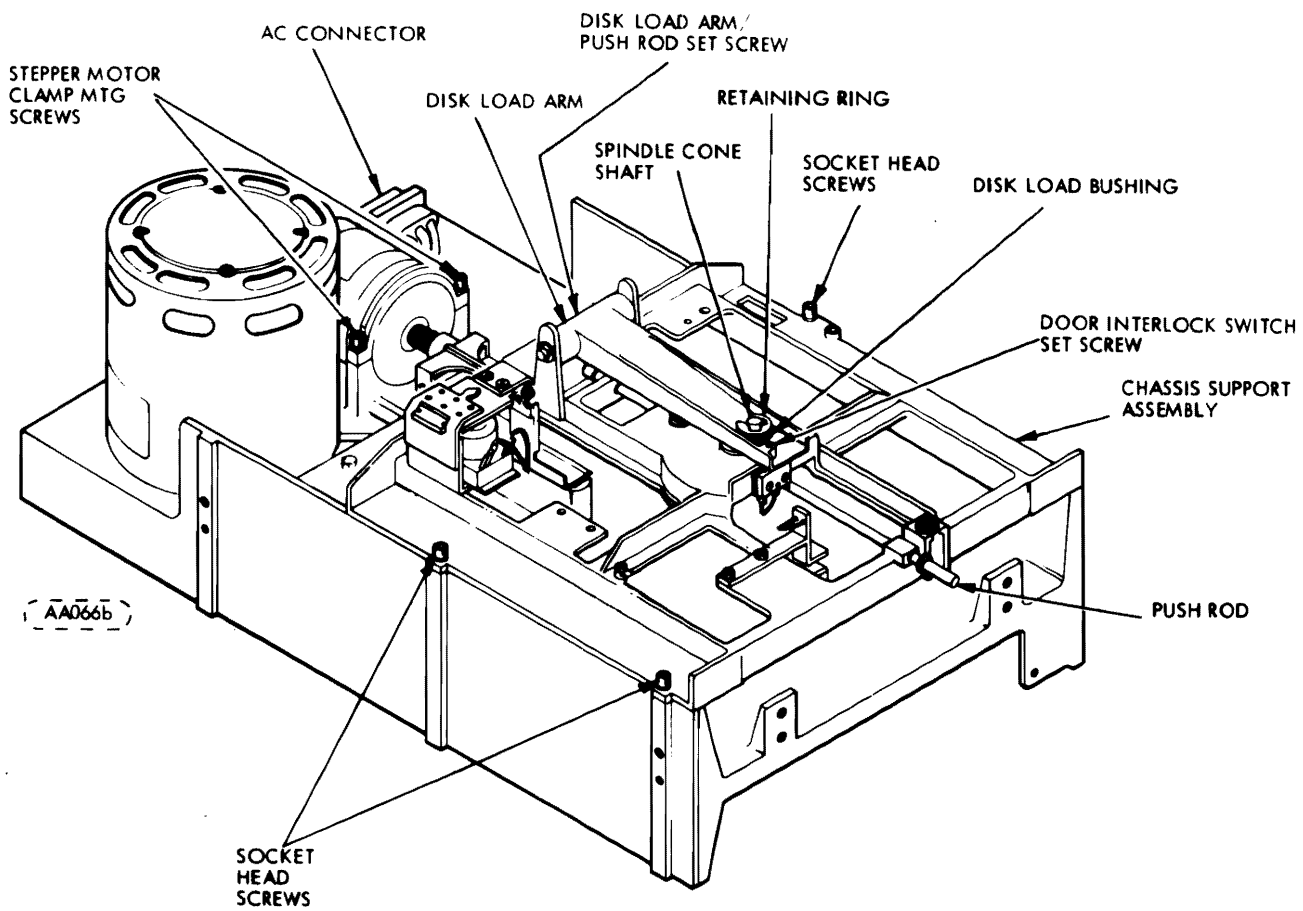

Figure 6-9. Chassis Base Assembly

6.6.6 DISKETTE-LOAD-BAIL ADJUSTMENT

This procedure must be performed whenever the solenoid or bail are removed or the screw holding the bail becomes loose.

a. Place a 0.010" (0.254mm) feeler gauge on boss of bottom support casting underneath bail.

b. Energize solenoid.
c. Loosen mounting screw on bail (Figure 6-10).
d. Adjust Bail so the foam pad touches the feeler gauge.

NOTE

On early units, the bail did not have a convex dimple and guide slot. When adjusting these units, the spacing must be checked at both ends of the bail to ensure it is parallel to the boss.

e. Tighten mounting screw.

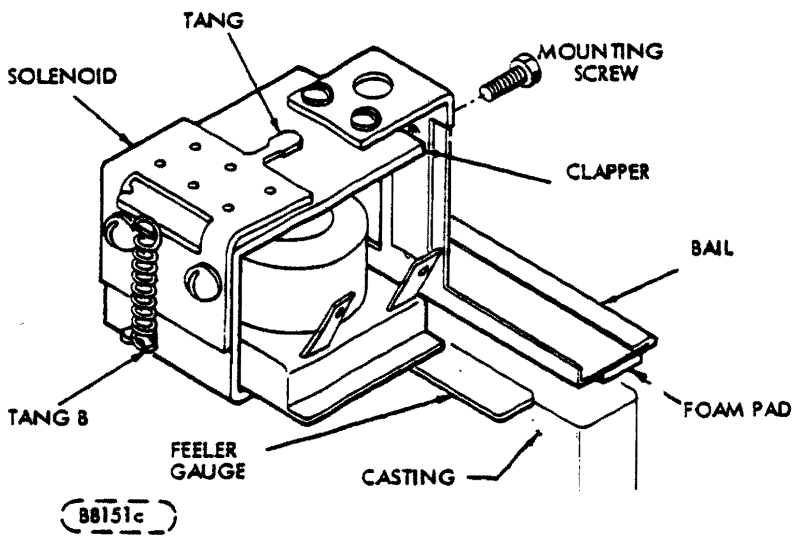

Figure 6-10. Diskette Load Solenoid

6.6.7 SPINDLE AND CONE ADJUSTMENT

This procedure must be performed whenever the spindle and cone are out of alignment or whenever the actuator assembly is removed or replaced.

a. Loosen chassis support assembly (Figure 6-9).
b. Position chassis assembly by pushing down on the spindle cone shaft so cone seats in the spindle (Figure 6-11).
c. Slowly close door without spindle turning. Spindle top surface and cone spindle contact surface must meet at the same time on the full circumference of the spindle (see Figure 6-11).
d. Complete door closing slowly. Visually verify that all segments on the cone that can be seen are fully seated in the spindle. Slowly rotate spindle and verify that all cone segments are seated and that the segments do not seat as the spindle is rotated as evidenced by a "clicking" sound or observing the segments seating.
e. Repeat fully opening and closing door four times. Verify that after each closing all cone segments are fully closed. Verify that the load arm does not bind when door is opened and closed.
f. Secure socket head screws (Figure 6-9) and again recheck steps "c" through "e".

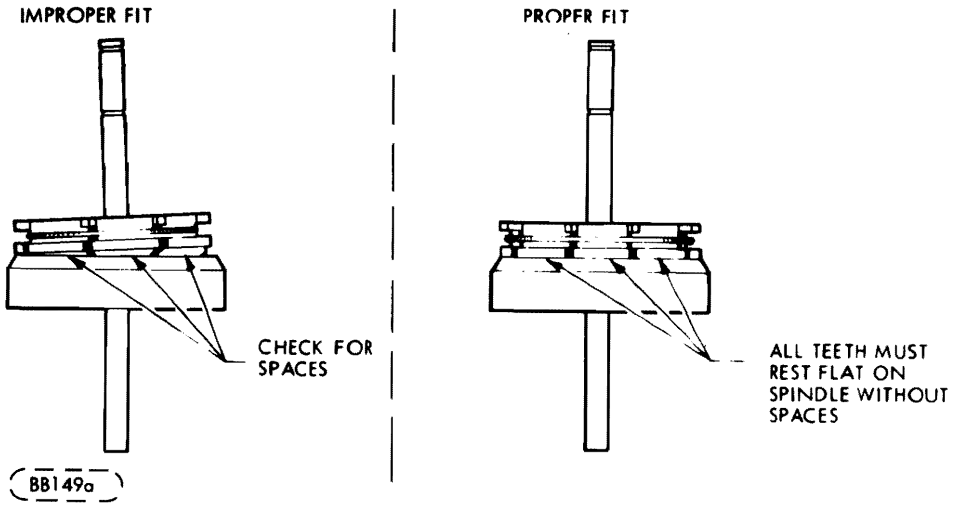

Figure 6-11. Spindle and Cone

6.6.8 WRITE-PROTECT-ASSEMBLY ADJUSTMENT

This adjustment will be required whenever the unit is disassembled, or a different style diskette is utilized in the unit.

a. With a Write-Protected diskette installed in the unit (Write Protect slot uncovered), monitor U15 pin 11 for the WRITE PROTECT signal. A continuous logically high signal will be present whenever the Write-Protect assembly is properly adjusted. A logically low signal will appear if not properly adjusted.

b. To adjust, loosen the two hex-head screws holding the sensor mount in place. With the front-panel door open, push down on the diskette-load arm (Figure 6-9) to insure that the diskette is in the loaded position (Figure 6-10). At the same time, grasp the end of the envelope and move from side-to-side, and forward and backward while observing the WRITE PROTECT signal at U15 pin 11. Adjust the mount until the WRITE PROTECT signal is present for any position of the envelope.

c. Tighten the mount screws, and re-check to verify signal under all conditions of envelope position.

6.6.9 TRACK '00' SWITCH ADJUSTMENT

Perform either the mechanical or electrical procedure given below whenever the Track 00 switch has been replaced, or the device fails to give current Track 00 indication, or if head has been realigned.

- Mechanical Adjustment

a. Step read/write head out to track 01.
b. Place a 0.010 (0.254 mm) feeler gauge between carriage assembly and Track 00 switch, as shown in Figure 6-6 .
c. Verify that Track 00 switch closes by observing Track 00 signal at terminal J3-2 on Component Board Assembly (see Figure 6-1).
d. If Track 00 signal does not occur, loosen Track 00 switch bracket mount screw and rotate switch bracket forward until Track 00 signal occurs.

- Electrical Adjustment

e. Step Read/Write head out to Track 00.
f. Do a continuous two track seek (back and forth between Tracks 00 and 02).
g. Verify that the duty cycle of the signal observed at terminal J3-2 is 40% to 60%.
h. If the signal is not 40% to 60% duty cycle, loosen Track 00 switch-bracket mount screw and rotate switch bracket until signal is set to 40% to 60% duty cycle.

6.7 REMOVAL AND REPLACEMENT PROCEDURES

The following procedures give the proper sequence for removal and replacement of major assemblies. To avoid damage to parts, the procedure must be performed in sequence.

6.7.1 PRINTED-CIRCUIT BOARD (PWA)

a. Disconnect I/O Cable from J1 (refer to Figure 6-1).
b. Disconnect harnesses from connectors on printed circuit board.
c. Remove two screws from printed-circuit board adjacent to connector J1 (Figure 6-12).
d. Remove PWA by detatching it from the four push-in clips shown in Figure 6-12.
e. To replace printed-circuit board push clips through printed-circuit board.
f. Replace two screws adjacent to connector J1.
g. Reconnect harness and I/O cable.
h. Set dipswitch S1 is applicable.
i. Perform Burst to Index Check and adjust if necessary (paragraph 6.6.2).

6.7.2 ACTUATOR ASSEMBLY

a. Open front-panel door.
b. Disconnect harness from J2 and J4 on printed circuit board (see Figure 6-1).
c. Remove four (4) socket-head screws securing chassis support (Figure 6-9).
d. Slide chassis support back far enough to clear push rod (Figure 6-16) of front panel and lift support clear of chassis.
e. Remove two (2) screws securing bearing retainer (Figure 6-5).
f. Remove stepper motor clamp by removing two socket head screws (Figure 6-5). Remove Cable Clamp.
g. Carefully slide actuator assembly (stepper motor, actuator, and bearings at the end of stepper shaft) straight out toward the rear of the FDD until unit is clear of the casting.
h. To replace actuator assembly, slip bearings into support casting, Figure 6-5 . (Assure carriage assembly is fitted on carriage guide.)

CAUTION

The wavy spring washer between the two bearings can prevent the bearings from being inserted into the support casting if the washer has slipped off-center and protrudes beyond the circumference of the bearings. If this happens, loosen the retainer screw on the end of the shaft so the bearings can separate and the washer can be repositioned. The screw must be retightened after the bearings are successfully inserted.

j. Replace stepper motor clamp and two socket head screws (Figure 6-5).
k. Secure the bearing retainer by replacing the two bearing retainer screws (Figure 6-5).

CAUTION

The bearing retainer clamp should have an included angle of approximately 92° between the base and side. When base is securely fastened to chassis, this will assure proper tension on bearings. If a gap exists between bearing and retainer or if bearing is being bound up by retainer, this angle must be checked.

l. Perform Actuator Alignment Procedure, (paragraph 6.6.3).
m. Perform Spindle and Cone Adjustment, (paragraph 6.6.7).
n. Perform Push-Rod Travel Adjustment, (paragraph 6.6.4).

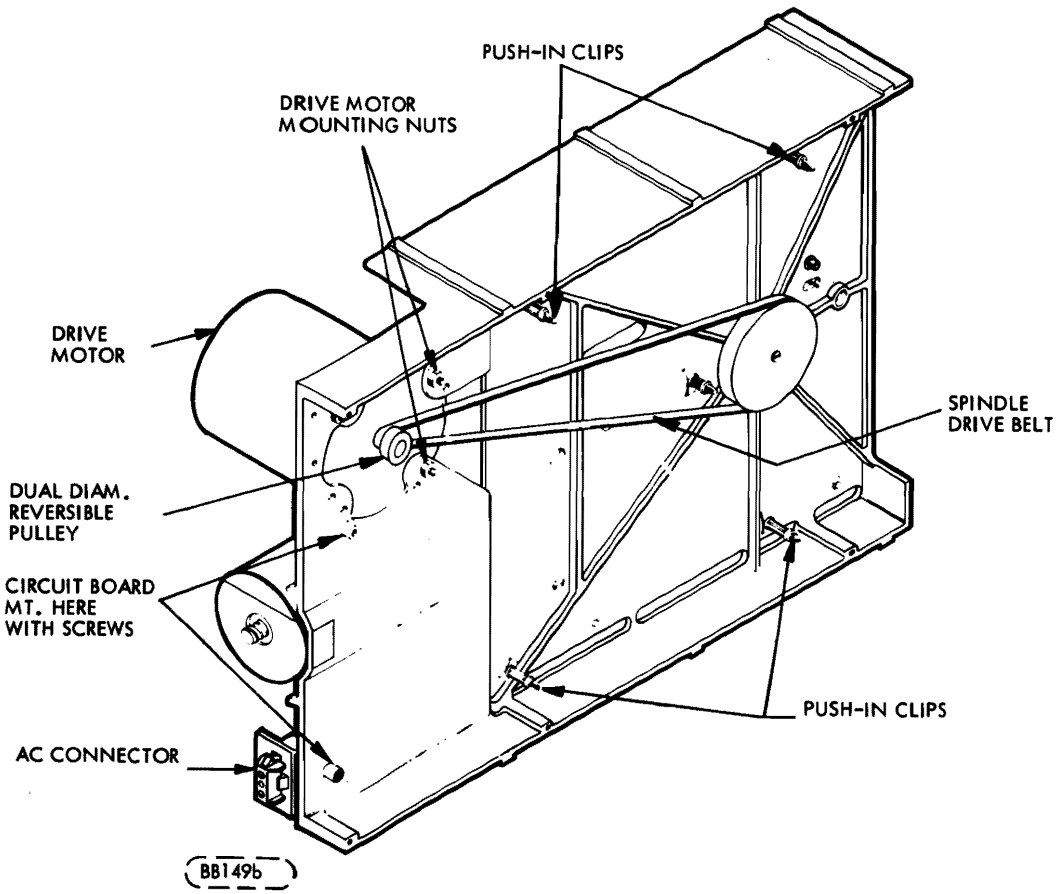

Figure 6-12. Base-Casting Assembly

6.7.3 DRIVE MOTOR ASSEMBLY

a. Perform removal procedure for printed circuit board (paragraph 6.7.1).
b. Remove screws securing drive motor cable clamps.
c. Remove AC connector from bracket. (Figure 6-12)
d. Remove spindle drive belt (Figure 6-12)
e. Remove three (3) nuts securing drive motor (Figure 6-12)
f. Remove drive motor assembly (drive motor, capacitor, and AC connector).
g. To replace drive motor assembly perform, in reverse order, steps f through a substituting word replace for word remove.

6.7.4 HEAD LOAD PAD REPLACEMENT

CAUTION

Do not raise the Head-Load Arm to the 90-degree position and then release it; damage to the Load-Arm Spring and/or to the Head (core and ceramics) could result.

a. Remove power from the unit.
b. Move the carriage assembly to its rear most position (toward the stepper motor) by turning the aft part of the stepper motor shaft (Figure 6-13). This will provide clearance for lifting the head load arm.
c. Lift the head load arm until the head load pad is visible (see Figure 6-13).
d. If head load arm is a 77603108 (Figure 6-13) proceed to step h, if not go to step e.
e. Remove the used pad with a sharp tool, if necessary, and discard. Be sure to remove all of the old pad and adhesive. Alcohol may be used to remove the old adhesive.
f. Remove the protective backing from the new head load pad and position pad in center of recess of head load arm. Press pad firmly to insure adhesion with a clean tongue depressor or with thumb using a lint free cloth to protect the pad from grease or dirt.
g. Go to step n.
h. Loosen clamping screw holding rim of head load pad.
i. Insert screw driver and rotate head load pad so flattened side will clear clamping screw.
j. Remove Pad Holder Assembly.
k. Insert new Assembly, with flat side toward clamping screw.
l. Assuring that head load pad is fully seated, rotate pad 180°.
m. Tighten clamping screw to hold pad in place.
n. Lower arm gently onto head.

6.7.5 SOLENOID REPLACEMENT AND TANG ADJUSTMENT

This procedure must be performed whenever the solenoid is out of alignment or whenever the solenoid assembly is replaced.

a. Place the tapered end of a flat head screw driver between Tang A and solenoid clapper. (See Figure 6-10).
b. Gently bend the tang upward with the screwdriver.
c. Using a 0.060 inch (1.52mm) wire feeler gauge, insert the feeler gauge in the gap between the underside of the clapper and the coil core. (See Figure 6-14)

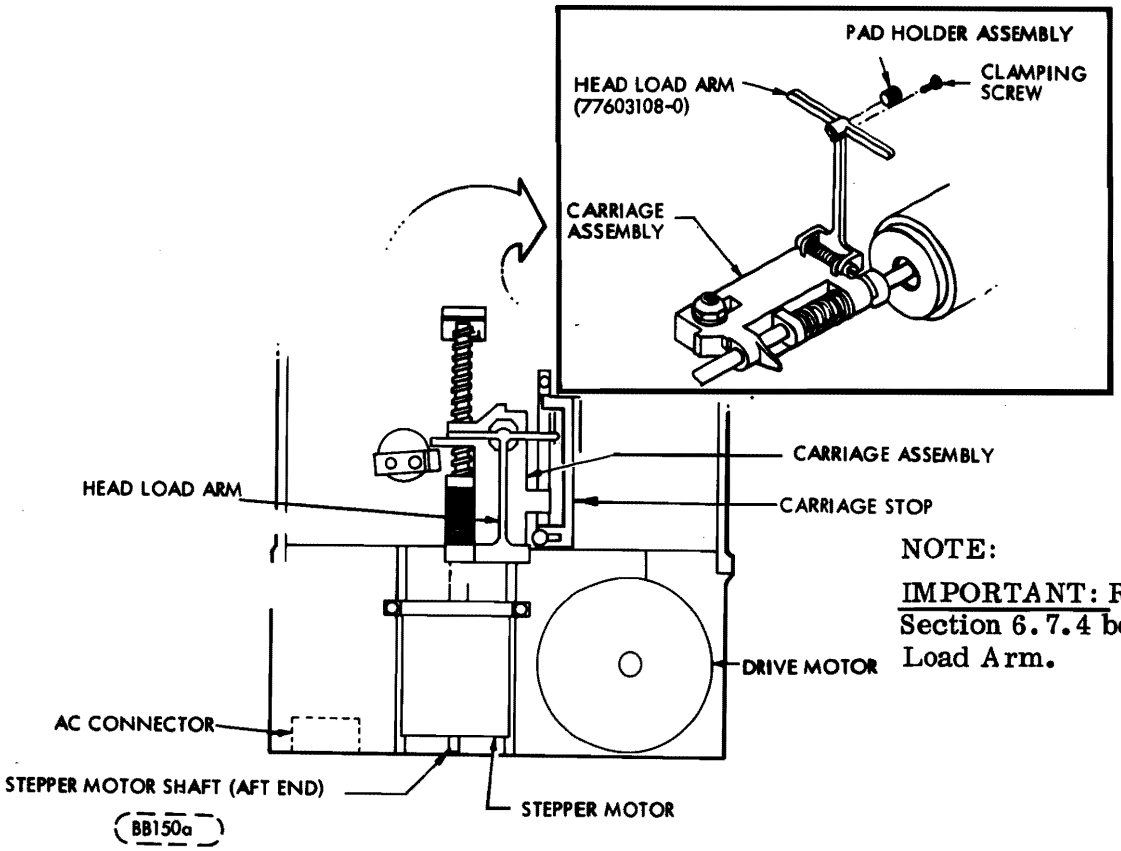

NOTE:

IMPORTANT: Refer to CAUTION in Section 6.7.4 before handling Head-Load Arm.

Figure 6-13. Head-Load-Pad-Replacement Illustration

d. If unable to insert 0.060 inch (1.52mm) wire feeler gauge, continue to gently bend tang upward until feeler gauge can be inserted.
e. Next, attempt to insert a 0.062 in (1.58mm) wire feeler gauge between the underside of the clapper and the coil.
f. If this gauge can be inserted, bend tang down until 0.062 inch (1.58mm) feeler gauge will not insert in gap between clapper and coil core.
g. Insert a 0.058 in (1.47mm) wire feeler gauge in gap between underside of clapper and coil core.
h. If 0.058 in (1.47mm) feeler gauge will not fit, bend tang up slightly.
i. Continue checking with the 0.062 inch (1.58mm) wire gauge feeler and 0.058 inch (1.47mm) wire gauge until the following condition is achieved:
   1. 0.062 inch (1.58mm) feeler gauge will not pass between tang and clapper;
   2. 0.058 inch (1.47mm) feeler gauge passes freely between tang and clapper.
j. Check spring adjustment by gently pressing down on clapper until the 0.060 inch (1.52mm) ±0.002 in (0.051mm) gap is closed.
k. Allow clapper to rise slowly and release.
l. Clapper should be in contact with the tang.
m. If not, bend the lower tang B, Figure 6-10; downward gently.
n. Recheck that the clapper rise and perform step m until clapper and tang make contact.
o. Check bail adjustment per paragraph 6.6.6.

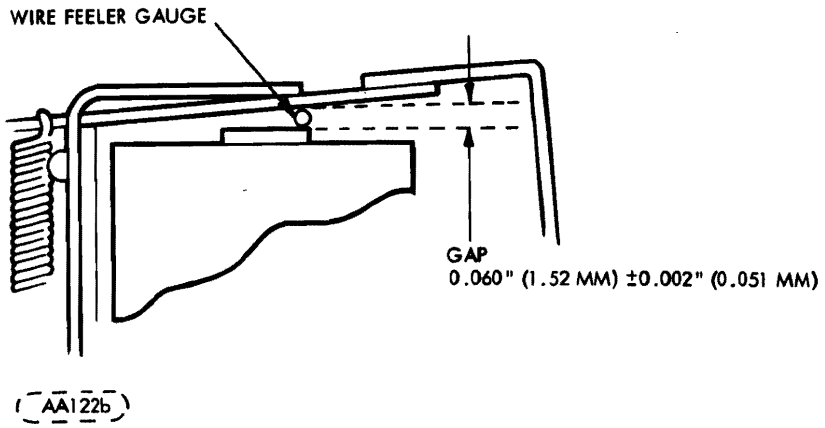

Figure 6-14. Solenoid Adjustment

6.7.6 CARRIAGE AND/OR STEPPER-MOTOR REPLACEMENT

The carriage and stepper motor are to be replaced as one assembly, being factory assembled and tested only. Refer to Section 6.7.2.

6.8 FREQUENCY CONVERSION

6.8.1 OPERATING-FREQUENCIES CONVERSION PROCEDURE

This procedure is to be used to convert the FDD unit from 60-Hz operation to 50-Hz operation or vice versa. This is accomplished by reversing the dual diameter reversible pulley on the spindle-motor shaft (Figure 6-12) using the following steps:

a. Remove AC power.
b. Remove Printed-Circuit-Board Assembly per paragraph 6.7.1.
c. Remove the belt from the spindle-motor pulley. (Accessible from the under side of unit).
d. Loosen set-screw and remove pulley.
e. Reverse pulley and replace on motor shaft.
f. Position pulley allowing 0.079" (2.01 mm) ±0.010" (0.254mm) between shoulder of motor mounting screws and pulley (Figure 6-15).
g. Tighten down set-screw.
h. Replace belt and Printed Circuit Board.

CAUTION

It is IMPORTANT that the new operating frequency be marked on the unit's rating nameplate.

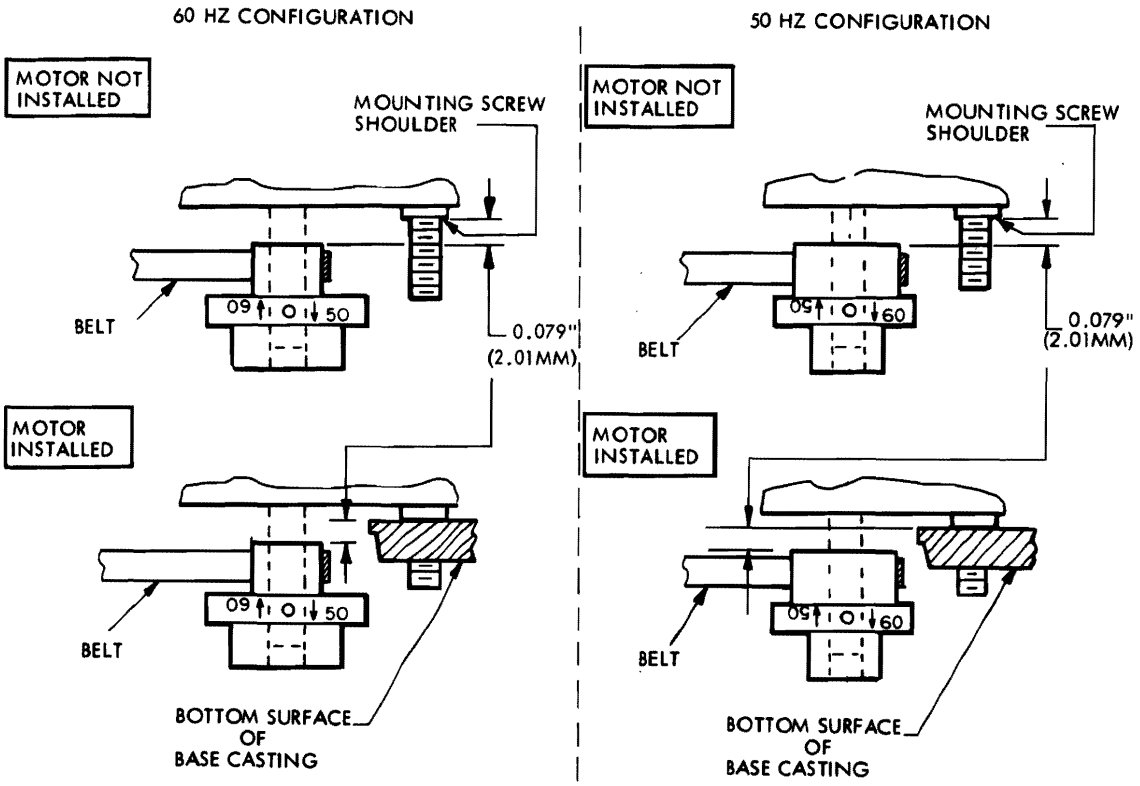

Figure 6-15. Drive Pulley Reversal

MAINTENANCE AIDS

7.1 INTRODUCTION

This section contains detailed information on the logic circuits used in the FDD. The logic consists of two types of circuits: discrete component and integrated circuits (IC). Integrated circuits are contained within a single chip and discrete component circuits contain individually identifiable resistors, capacitors, transistors, etc.

7.2 PHYSICAL DESCRIPTION (Logic)

All components are mounted on one side of the printed circuit board. The board is 8 x 11 inches (203.2mm x 279.4mm) and contain both IC and discrete component circuits

7.3 USE OF RELATIVE LEVEL INDICATORS

The relative level indicator is a small triangle located on the input or output to a logic block. The presence or absence of this indicator indicates the conditions that are necessary to satisfy the function of the logic block. The presence of the triangle indicates a 0 logic level on that line is needed to satisfy the function. The absence of the triangle indicates a logical 1 is needed to satisfy the function.

The relative level indicator depicts the occurrence of inversion. Figure 7-1 shows some representative examples of the relative level indicator being used in this manner.

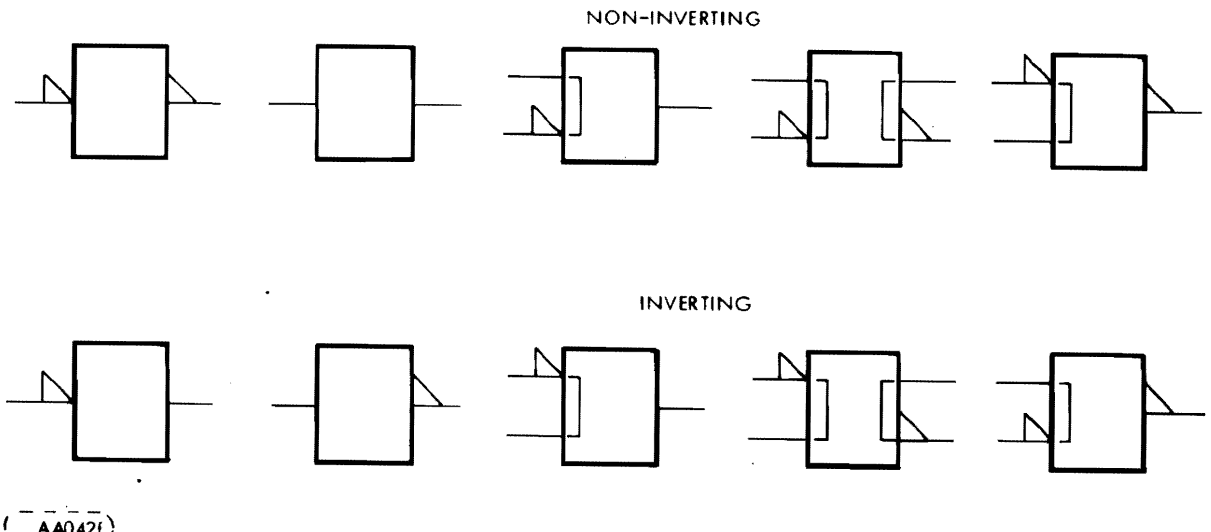

Figure 7-1. Inversion Conventions

7.4 INTEGRATED CIRCUITS

Figure 7-2 shows an example of a schematic block and the information that it contains. The first line gives the function symbol which identifies the logic function that the block performs. Refer to Figure 7-3 for a summary of function symbols. The second line gives the CDC element number. The third line on the schematic block gives the circuit reference designation.

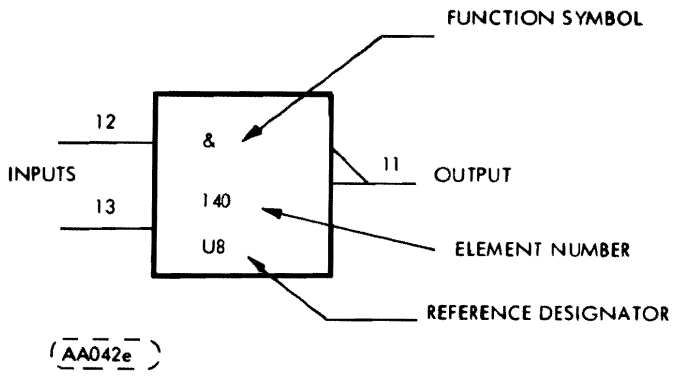

Figure 7-2. Integrated Circuit

FUNCTION SYMBOLS	
&	AND GATE OR INVERTER
1	OR GATE OR INVERTER
=1	EXCLUSIVE OR
1 ⎍	ONE SHOT
Σ	SUMMING CIRCUIT. NUMBER FOLLOWING (EXAMPLE 100) INDICATES GAIN OF 100
X/Y	LEVEL CONVERSION - TRANSMISSION LINE TO LOGIC LEVEL, SWITCH STATE TO LOGIC LEVEL OR LOGIC LEVEL TO POWER OUTPUT
	SCHMITT TRIGGER (LOWER TRIP POINT ADJUSTABLE)
GENERAL SYMBOLS	
	INDICATES NON STANDARD LOGIC LEVEL
	INDICATES ANALOG SIGNAL
	TEST POINTS
	INHIBITING INPUT

BB151b

Figure 7-3. Schematic Symbols

PARTS DATA

8.1 INTRODUCTION

This section contains an illustrated parts breakdown that describes and illustrates all variations of the Flexible Disk Drive (FDD). In general, parts are in disassembly sequence but do not necessarily indicate the maximum recommended disassembly of parts in the field.

8.2 ILLUSTRATIONS

Item numbers within a circle 1 indicate an assembly (group of parts). Item numbers without a circle, 1, indicate a single part; a group of parts that are pinned or press fitted together; or a group of parts which is normally replaced as an assembly.

8.3 PARTS LISTS

In addition to the accompaning parts list on each illustration, two additional Parts Lists are available; the Top-Down Assembly/Component Parts List and the Cross Reference Index. Instruction for the use of all Parts lists in paragraph 8.6.

8.4 TOP MECHANICAL AND ASSEMBLY LOCATION

In conjunction with Table 8-1, Figure 8-1 serves two purposes;

1. When used with Table 8-1, it identifies all unique parts and assemblies for each FDD variation.
2. It identifies by sheet location where all major assemblies are broken down.

8.4.1 TOP MECHANICAL ASSEMBLY (TMA)

To determine what parts are used on a particular model, find the applicable model in Table 8-1. The corresponding item number represents the last three digits of the TMA number. Example: Model BR803N, TMA number 75744013. The item numbers at the top of Table 8-1 corresponds with the item numbers in Figure 8-1. All parts and assemblies that apply will be identified with an 'X' ('0' means not applicable).

8.5 REPLACEMENT PARTS

When ordering replacement parts for the FDD, the inclusion of the Model designation and the figure, item and part identification numbers for each part ordered will ensure positive identification of parts. Before ordering parts however, refer to paragraph 8.7 spare parts.

NOTE

Replacement parts for all OEM engineering evaluation units (BRXXXX TMA099) must be obtained from MPI OEM Engineering.

TABLE 8-1. TOP MECHANICAL ASSEMBLY CONFIGURATOR

MODELS	I T M A	T E M	ITEM NUMBERS 1111111111 0000000001 1234567890	1111111111 1111111112 1234567890	1111111111 2222222223 1234567890	1111111111 3333333334 1234567890	1111111111 4444444445 1234567890	1111111111 5555555556 1234567890	1111111111 6666666667 1234567890
BR803A	001		XX00000000	0000000000	0X00000000	0X0000X0X0	XX0X0XX000	0000X00000	0000000000
BR803B	002		X0X0000000	0000000000	0X00000000	0X0000X0X0	XX0X0XX000	0000X00000	0000000000
BR803C	003		X00X000000	0000000000	0X00000000	0X0000X0X0	XX0X0XX000	0000X00000	0000000000
BR803D	004		X000X00000	0000000000	0X00000000	0X0000X0X0	XX0X0XX000	0000X00000	0000000000
BR803E	005		X0000000X0	X000000000	0X00000000	00X000X0X0	XX0X0XX000	0000X00000	0000000000
BR803F	006		X00000X000	0000000000	0X00000000	00X000X0X0	XX0X0XX000	0000X00000	0000000000
BR803G	007		X0000000X0	X000000000	0X00000000	000X00X0X0	XX0X0XX000	0000X00000	0000000000
BR803H	008		X0X0000000	0000000000	0X00000000	000X00X0X0	XX0X0XX000	0000X00000	0000000000
BR805A	009		XX00000000	0000000000	0X00X00000	0000X0X0X0	XX0X0XXX00	0000X00000	0000000000
BR805B	010		X0X0000000	0000000000	0X00X00000	0000X0X0X0	XX0X0XXX00	0000X00000	0000000000
BR805C	011		X00X000000	0000000000	0X00X00000	0000X0X0X0	XX0X0XXX00	0000X00000	0000000000
BR805D	012		X000X00000	0000000000	0X00X00000	0000X0X0X0	XX0X0XXX00	0000X00000	0000000000
BR803N	013		XX00000000	0000000000	0X00X00000	0000X0X0X0	XX0X0XXX00	0000X00000	0000000000
BR803P	014		X0X0000000	0000000000	0X00X00000	0000X0X0X0	XX0X0XXX00	0000X00000	0000000000
BR803R	015		X000X00000	0000000000	0X00X00000	0000X0X0X0	XX0X0XXX00	0000X00000	0000000000
BR803S	016		X00X000000	0000000000	0X00X00000	0000X0X0X0	XX0X0XXX00	0000X00000	0000000000
BR803J	017		X000000X00	0000X00000	0X00000000	00X000X0X0	XX0X0XX0X0	0000X00000	0000000000
BR803K	018		X000000X00	0000X00000	0X00000000	000X00X0X0	XX0X0XX0X0	0000X00000	0000000000
BR803L	019		X0000000000	0000000000	0X0000000X	00000XX0X0	XX000XX0X0	0000X00000	0000000000
BR803M	020		X0000000000	0000000000	0X000000X0	00000XX0X0	XX000XX0X0	0000X00000	0000000000
BR8A3C	021		X000000X00	0000000000	0X00000000	00X000X0X0	XX0X0XX0X0	0000X00000	0000000000
BR8A3D	022		X0000000X0	0000000000	0X00000000	00X000X0X0	XX0X0XX0X0	0000X00000	0000000000
BR8A3E	023		X000000X00	0000000000	0X00000000	000X00X0X0	XX0X0XX0X0	0000X00000	0000000000
BR8A3F	024		X0000000X0	0000000000	0X00000000	000X00X0X0	XX0X0XX0X0	0000X00000	0000000000
BR8A2A	025		XX00000000	0000000000	0X00X00000	0X00000XX0	XX0X0XX00X	0000X00000	0000000000
BR803T	026		X0000X0000	0000000000	0X00X00000	0000X0X0X0	XX0X0XXX00	0000X00000	0000000000
BR805E	027		X0000X0000	0000000000	0X00X00000	0000X0X0X0	XX0X0XXX00	0000X00000	0000000000
BR8A3A	028		X0000000X0	X000000000	0X00000000	0X0000X0X0	XX0X0XX000	0000X00000	0000000000
BR8A2B	030		X0X0000000	0000000000	0X00X00000	0X00000XX0	XX0X0XX000	0000X00000	0000000000
BR8A2C	031		X00X000000	0000000000	0X00X00000	0X00000XX0	XX0X0XX000	0000X00000	0000000000
BR8A2D	032		X0000X0000	0000000000	0X00X00000	0X00000XX0	XX0X0XX000	0000X00000	0000000000
BR8A2E	033		X000X00000	0000000000	0X00X00000	0X00000XX0	XX0X0XX000	0000X00000	0000000000
BR8A2F	034		X0000000X0	00X0000000	0X00000000	0X0000X0X0	XX0X0XX000	0000X00000	0000000000
BR8A2G	035		XX00000000	0000000000	0X00X00000	0000000XX0	XX0X0XX000	0000X00000	000000000X
BR8A2H	036		X0000000X0	0000000000	0X0X000000	0X00000XX0	XX00XXX000	0000X00000	0000000000
BR8A2J	037		XX00000000	0000000000	0X00000000	0X00000XX0	XX0X0XX000	0000X00000	0000000000
BR8A2K	038		X0000000X0	00X0000000	0X00000000	0X00000XX0	XX0X0XX000	0000X00000	0000000000
BR8A2L	039		X00000X000	0000000000	0X00X00000	0X00000XX0	XX0X0XX000	0000X00000	0000000000
BR8A2M	040		X000000X00	0000000000	0X00X00000	0X00000XX0	XX0X0XX0X0	0000X00000	0X00000000
BR8A2N	041		X000X00000	0000000000	0X00000000	0X00000XX0	XX0X0XX000	0000X00000	0000000000
BR8A2P	042		00000000X0	0000X00000	0X00000000	X00000X00X	00XX0X00X0	0000X0000X	000X000X00
BR8A4A	044		0000000000	0000X00000	0X0000XX00	X00000X00X	00X00X00X0	0X00XXXX00	000X0000X0
BR8A7A	046		00000000X0	0000X00000	0X00000000	X00000X00X	00XX0X00X0	0000X00000	000X0000X0
BR8A5A	047		X0000000X0	0000000000	0X00X00000	0000000XX0	XX0X0XX0X0	0000X00000	XX0000000
BR8A5B	048		X000000X00	0000000000	0X00X00000	0000000XX0	XX0X0XX0X0	0000X00000	XX0000000
BR8A2W	049		X00000X000	0000000000	0X00000000	0X0000X0X0	XX0X0XX000	0000X00000	0000000000
BR8A2Y	050		X0000000X0	00X0000000	0X00000000	0X0000X0X0	XX0X0XX000	0000X00000	0000000000
BR8A6B	051		X0X0000000	0000000000	0X00000000	0X0000X0X0	XX0X0XX000	0000X00000	0000000000
BR803U	052		X0000000X0	X000000000	0X00000000	0X0000X0X0	XX0X0XX000	0000X00000	0000000000
BR8A2S	053		X000000X00	0000000000	0X00X00000	0X00000XX0	XX0X0XX0X0	0000X00000	0000000000
BR8A2T	054		X000000X00	0000000000	0X00X00000	0X00000XX0	XX0X0XX0X0	0000X00000	0000000000
BR8A2U	055		X0000000X0	X000000000	0X00000000	00X000X0X0	XX0X0XX000	0000X00000	0000000000
BR8A2V	056		X0000000X0	00X0000000	0X00X00000	0X00300XX0	XX0X0XX000	0000X00000	0000000000
BR8A2Z	057		X00000000X0	0000000000	0X00000000	0X00000XX0	XX0X0XX0X0	0000X00000	0000000000
BR8A3G	058		XX0000000X0	0000000000	0X00X00000	0X00000XX0	XX0X0XX000	0000X00000	0000000000
BR8A3H	059		X0X0000000	0000000000	0X00X00000	0X00000XX0	XX0X0XX000	0000X00000	0000000000
	060		X0000000X0	00X0000000	0X00000000	0X00000XX0	XX0X0XX000	0000X00000	0000X00000
BR8A5C	061		X000000X00	0000000000	0X00X00000	0000000XX0	XX0X0XX0X0	0000X00000	XX0000000
BR8A5D	062		X000000X00	0000000000	0X00X00000	0000000XX0	XX0X0XX0X0	0000X00000	XX0000000
BR8A5E	063		XX00000000	0000000000	0X00X00000	0000000XX0	XX0X0XXX00X	0000X00000	0000000000
BR8A5J	064		XX00000000	0000000000	0X00X00000	0000000XX0	XX0X0XX000	X000X00000	0000000000
BR8A5T	066		X0000000000	X000000000	0X00X00000	0X00000XX0	XX0X0XX00X	0000X00000	0000000000
BR8A5F	080		XX00000000	0000000000	0X00X00000	0X00000XX0	XX0X0XX000	0000X00000	0000000000
BR8A5G	081		XX00000000	0000000000	0X00000000	0X00000XX0	XX0X0XX000	0000X00000	0000000000
BR8A5H	082		XX00000000	0000000000	0X00X00000	0000000XX0	XX0X0XX000	X000X00000	0000000000
BR8A5K	083		X0X0000000	0000000000	0X00X00000	0X00000XX0	XX0X0XX000	0000X00000	0000000000
BR8A5L	084		X0X0000000	0000000000	0X00000000	0X00000XX0	XX0X0XX000	0000X00000	0000000000
BR8A5N	085		X000000X00	0000000000	0X00X00000	0000000XX0	XX0X0XX0X0	X000X00000	0000000000
BR8A5P	086		X000X00000	0000000000	0X00X00000	0000000XX0	XX0X0XX000	X000X00000	0000000000
BR8A5R	087		XX00000000	0000000000	0X00X00000	0X00000X00	XX0X0XX000	0000X00000	0000000000
BR8A5S	088		X000000X00	0000000000	0X00X00000	0X00000XX0	XX0X0XX0X0	0000X00000	0000000000

ITEM	IDENT NO	DESCRIPTION	WHERE USED
101	83458201	CHASSIS ASM-COMMON PARTS	TMA
102	75291920	DRIVE MOTOR ASM 60 HZ	TMA
103	75291923	DRIVE MOTOR ASM 50 HZ	TMA
104	75291926	DRIVE MOTOR ASM 60 HZ	TMA
105	75291927	DRIVE MOTOR ASM 50 HZ	TMA
106	75291928	DRIVE MOTOR ASM 50 HZ	TMA
107	75291925	DRIVE MOTOR ASM 50 HZ	TMA
108	75888178	DRIVE MOTOR ASM 50 HZ	TMA
109	75881775	DRIVE MOTOR ASM 60 HZ	TMA
111	75291921	DRIVE MOTOR ASM 60 HZ	TMA
113	75291924	DRIVE MOTOR ASM 60 HZ	TMA
115	75891480	CHASSIS ASM-COMMON PARTS	TMA
122	94277416	STRAP, CABLE TIE	TMA
124	75291902	DRIVE MOTOR ASM 50 HZ	TMA
125	83427801	WRITE PROTECT ASM	TMA
127	77830690	DISKETTE DETECT ASM	TMA
128	75881779	DRIVE MOTOR ASM 60 HZ	TMA
129	75881780	DRIVE MOTOR ASM 50 HZ	TMA
130	75888181	DRIVE MOTOR ASM 60 HZ	TMA
131	83401806	FRONT PANEL ASM	TMA
132	83401801	FRONT PANEL ASM	TMA
133	83401802	FRONT PANEL ASM	TMA
134	83401803	FRONT PANEL ASM	TMA
135	83401804	FRONT PANEL ASM	TMA
136	83401805	FRONT PANEL ASM	TMA
137	75791510	ACTUATOR ASM	TMA
138	75791511	ACTUATOR ASM	TMA

ITEM	IDENT NO	DESCRIPTION	WHERE USED
139	75774736	CLIP-PUSH IN	TMA
140	77830685	UPPER HARNESS ASM	TMA
141	75747301	UPPER HARNESS ASM	TMA
142	83403504	LOWER HARNES ASM	TMA
143	83403503	LOWER HARNESS ASM	TMA
144	83403700	CONNECTOR BRACKET	TMA
145	75272300	CONNECTOR BRACKET	TMA
146	77830538	CSA LABEL	TMA
147	77594901	TRACK SWITCH ASM	TMA
148	83460101	AMP CONN KIT	TMA
149	75746702	CAPACITOR BRACKET	TMA
150	75898080	FRONT PANEL ASM	TMA
151	83401809	FRONT PANEL ASM	TMA
152	77832691	MOUNTING KIT	TMA
155	93592240	SCREW-WASHER	TMA
156	77830641	AC CONN & RELAY ASM	TMA
157	77830995	COVER	TMA
158	17901508	SCREW	TMA
160	77834336	LABEL, FCO	TMA
161	77834543	FRONT PANEL ASSY	TMA
162	75746701	CAPACITOR BRACKET	TMA
164	77836055	LABEL	TMA
168	77594704	OPT TRACK SENSE ASSY	TMA
169	77594705	OPT TRACK SENSE ASSY	TMA
170	83401808	FRONT PANEL ASSY	TMA

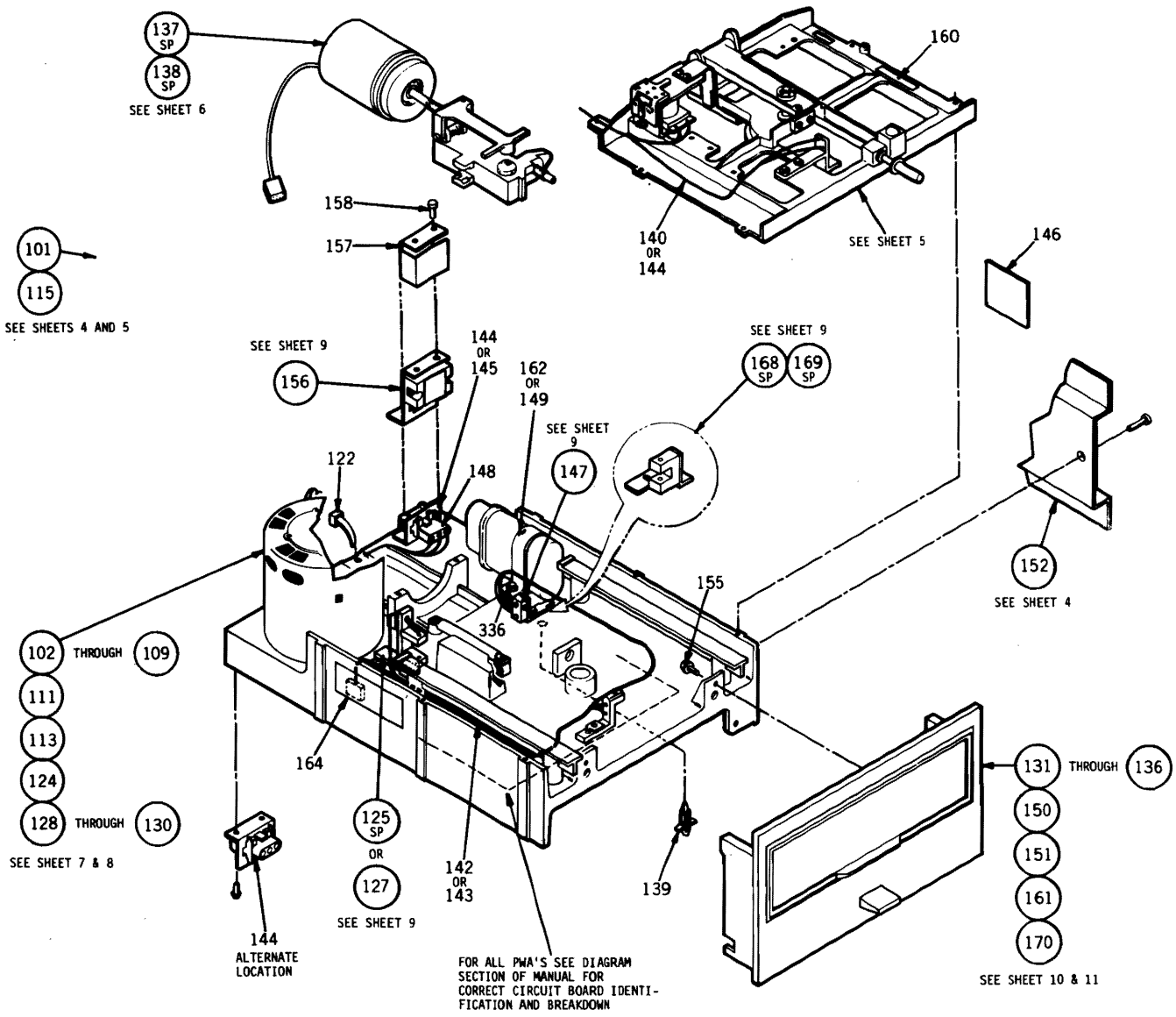

FIGURE 8-1. TOP MECHANICAL ASSEMBLY

ITEM	IDENT NO	DESCRIPTION	WHERE USED
101	83458201	CHASSIS ASM-COMMON PARTS	TMA
115	75891480	CHASSIS ASM-COMMON PARTS	TMA
152	77832691	MOUNTING KIT	TMA
153	92602001	CLAMP	101 115
178	10125801	WASHERS SPR LOCK	101 115
180	75293203	BELT-FLAT	101 115
183	75774732	CLIP-PUSH IN	101 115
186	10125803	WASHERS SPR LOCK	101 115
187	10125605	WASHERS PLAIN	101 115
188	77832145	LABEL IDENT	101 115
191	92073070	BEARING FLANGED	101 115
192	93529005	WASHER-SPRING WAVE	101 115
196	16402506	CLAMP CABLE	101 115
199	09000403	SCREW BIND HEAD	101 115
202	10126222	SCREW HEX SOC HD	101 115
205	93592086	SCR HEX SELF TAP	101 115
208	92602003	CLAMP, CABLE-NYLON	101 115
209	10126214	SCR HEX SOC HD CAP	101 115
210	83427900	PLATE-NUT	101 115
218	75882450	CARRIAGE STOP	101 115
219	93592488	SCREW	101 115
255	10127131	SCREW	152
256	10125805	LOCK WASHER	152
301	77830975	ADAPTER	152
336	93592160	SCREW, SELF TAP	101 115
339	10126401	STAR LOCK WASHER	101 115
340	75731302	ELECTRICAL SYMBOL	101 115
342	77594800	DECAL	152
350	75886086	BASE-MECHANISM, DIE	101
361	83403601	SPINDLE	101 115
362	75747000	SPACER BEARING	101 115
363	75745200	PULLEY-SPINDLE	101 115
364	75886087	BASE-MECHANISM, DIE	115
365	83461800	CLAMP, STEPPER MOTOR	101 115
366	75292400	GUIDE-CARRIAGE	101 115
374	94277400	TIE STRAP	101
377	93592486	SCREW	101 115
388	10125603	WASHER	101 115

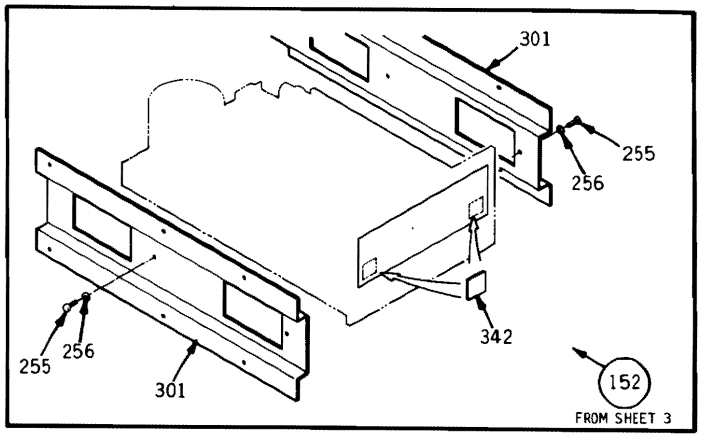

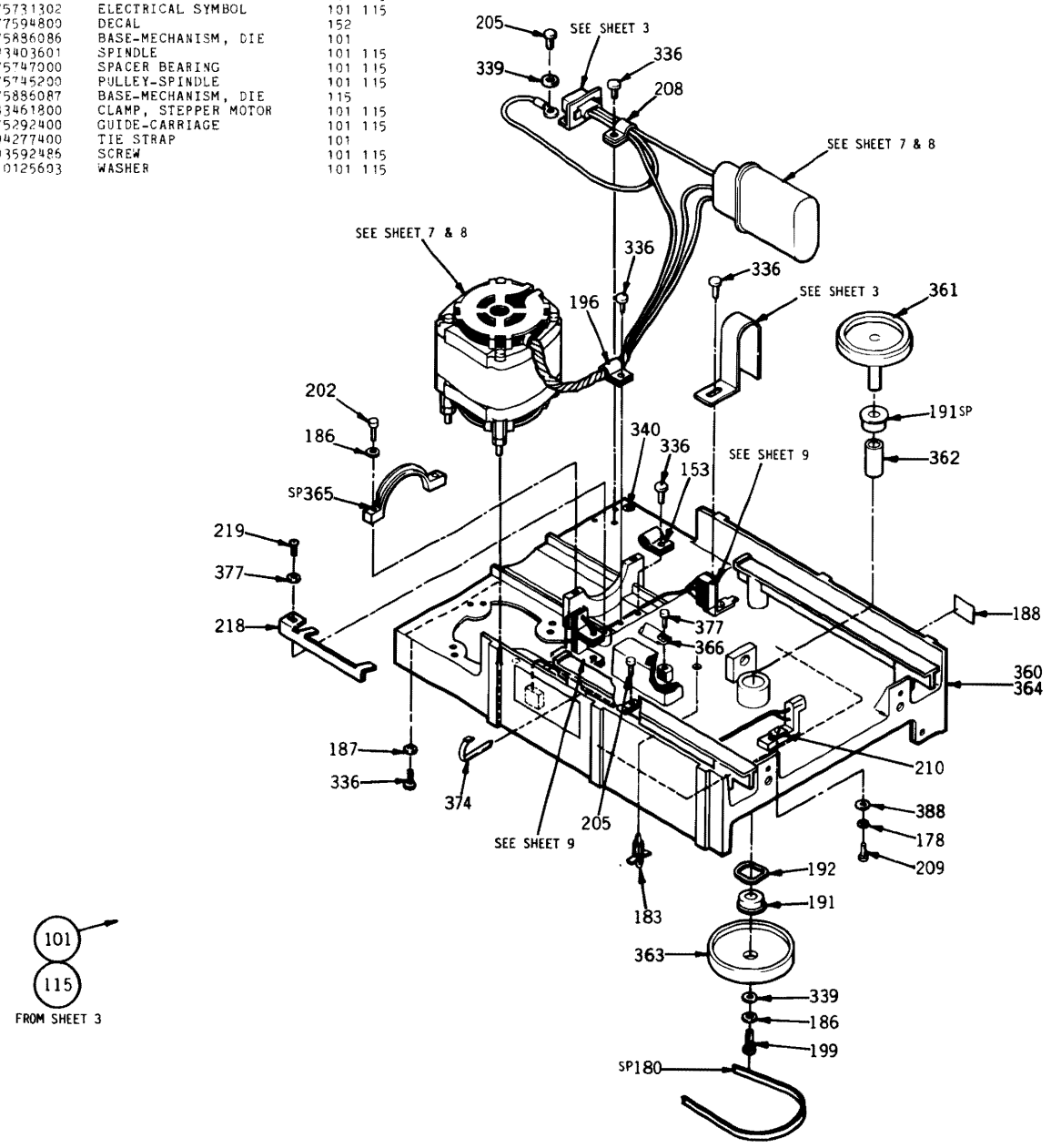

FIGURE 8-2. FDD COMMON PARTS (SHEET 1 OF 2)

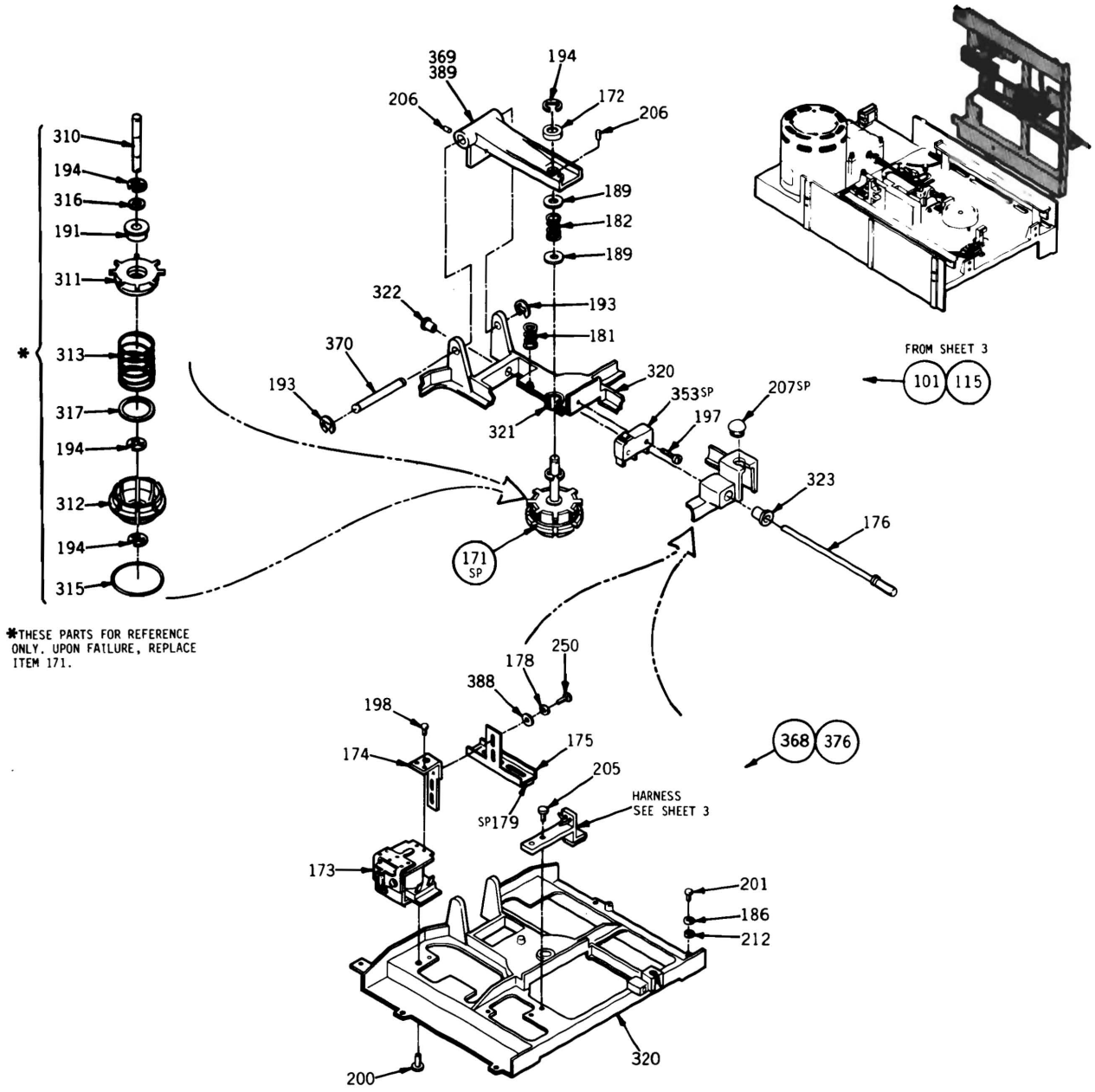

ITEM	IDENT NO	DESCRIPTION	WHERE USED
101	83458201	CHASSIS ASM-COMMON PARTS	TMA
115	75891480	CHASSIS ASM-COMMON PARTS	TMA
171	83402101	CONE ASM	101 115
172	75273200	BUSHING	101 115
173	75747202	SOLENOID	101 115
174	77834331	EXTENSION ARMATURE	101 115
175	77834326	BAIL ARMATURE	101 115
176	75885163	PUSH ROD ASSY	101 115
178	10125801	WASHERS SPR LOCK	101 115
179	77830732	FOAM PAD	101 115
181	75891000	SPRING-COMPRESSION	101 115
182	75292617	SPRING-COMPRESSION	101 115
186	10125803	WASHERS SPR LOCK	101 115
189	77835200	WASHER, NYLON	101 115
191	92073070	BEARING FLANGED	171
193	92033037	RING RETAINING	101 115
194	92033038	RETAINING RING	101 171
194	92033038	RETAINING RING	115
197	09000005	SCREW BIND HEAD	101 115
198	09000202	SCREW BIND HEAD	101 115
200	09000504	SCREW BIND HEAD	101 115
201	10126219	SCR HEX SOC HD CAP	101 115

ITEM	IDENT NO	DESCRIPTION	WHERE USED
205	93592086	SCR HEX SELF TAP	101 115
206	93820248	SCREW-SELF LOCKING	101 115
207	83411202	BUMPER DOOR	101 115
212	94279109	FLAT WASHER	101 115
250	93592482	SCR HEX HD	101 115
310	75790803	SHAFT	171
311	83426400	EXPANDER-CONE	171
312	77830481	CONE-DISK LOAD	171
313	83402200	SPRING CONE	171
315	83409701	SPRING-GARTER	171
316	94047069	WASHER	171
317	94047070	WASHER	171
320	75812011	SUPPORT DIE CAST MACHINED	368
321	75292807	BEARING-CYLINDRICAL	368
322	75813201	BUSHING, PUSH ROD MOLDED	368
323	75813202	BUSHING, PUSH ROD MOLDED	368
353	75724401	ACTUATOR SWITCH	101 115
368	75812021	SUPPORT-ASSEMBLED	101
369	83402803	ARM-DISK LOAD	101
370	75273000	PIN DISK LOAD ARM	101 115
376	75812022	SUPPORT-ASSEMBLED	115
388	10125603	WASHER	101 115
389	83402804	ARM-DISK LOAD	115

FIGURE 8-2. FDD COMMON PARTS (SHEET 2 OF 2)

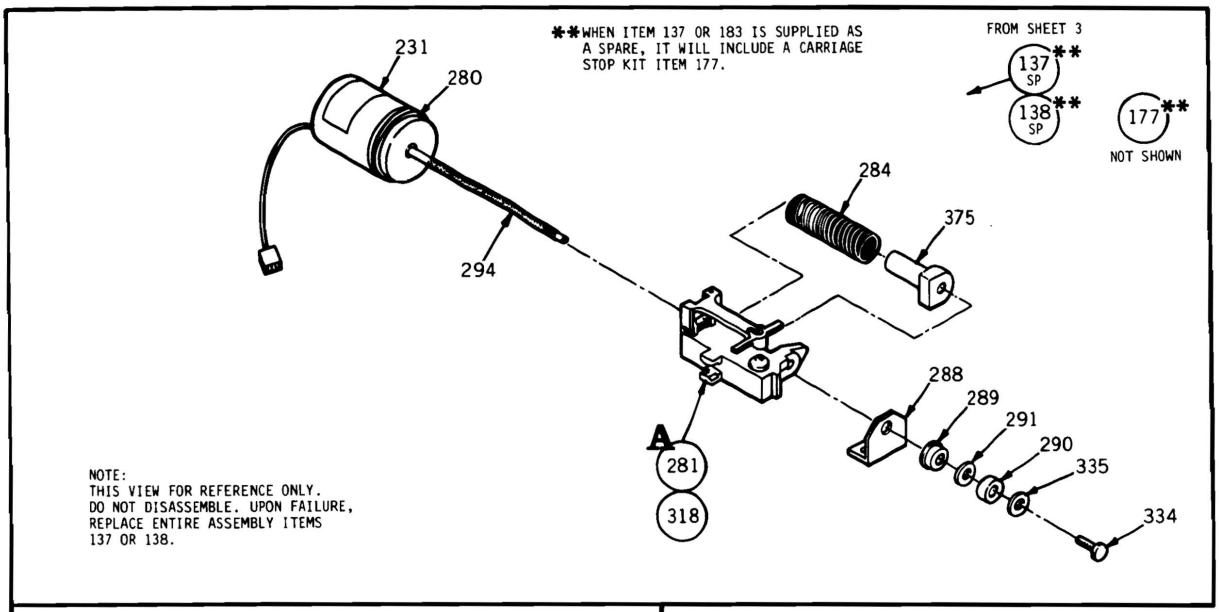

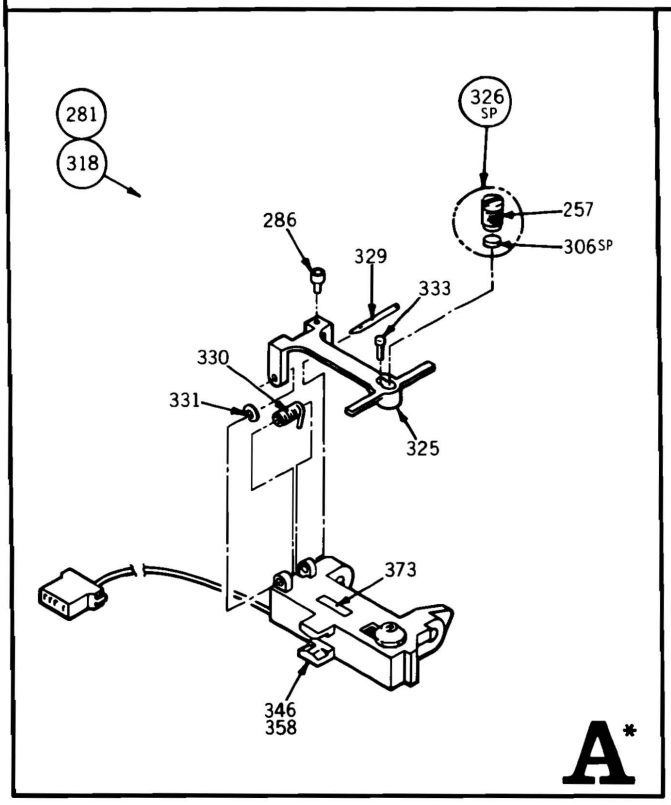

ITEM	IDENT NO	DESCRIPTION	WHERE USED
137	75791510	ACTUATOR ASM	TMA
138	75791511	ACTUATOR ASM	TMA
177	75882711	CARRIAGE STOP KIT	137 138
231	75790000	CAUTION LABEL	137 138
257	83460400	HOLDER PAD	326
280	75747801	STEPPER MOTOR ASM	137 138
281	77839902	CARRIAGE ASM	137
284	77594000	SPRING-CARRIAGE	137 138
286	10126209	SCR-SOC HP CAP	281 318
288	75813000	RETAINER-BEARING	137 138
289	92073020	BEARING FLANGED	137 138
290	94217207	BRG BALL-EXT INNER R	137 138
291	93529001	WASHER-SPRING WAVE	137 138
294	77832456	LUBRICANT	137 138
306	83460701	PAD HEAD LOAD	326
318	77839901	CARRIAGE ASSY	138
325	77603100	ARM-HEAD LOAD	281 318
326	77830482	HOLDER-PAD ASSY	281 318
329	77830998	PIN CARRIAGE	281 318
330	77830999	SPRING TORSION	281 318
331	94047068	WASHER, SPECIAL	281 318
333	10127310	SCREW SLOTTED	281 318
334	10125001	SCREW HEX HD	137 138
335	94047000	WASHER	137 138
346	83426204	CARRIAGE HEAD ASSY	281
358	83426205	CARRIAGE HEAD ASSY	318
373	77835304	LABEL	324 358
375	83427303	NUT CARRIAGE	137 138

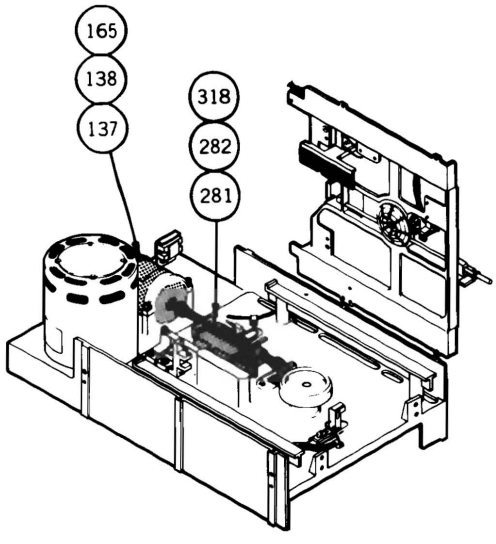

*THIS VIEW FOR REFERENCE ONLY.
DISASSEMBLY NOT RECOMMENDED.
HOWEVER, ITEM 326 CAN BE REPLACED.
REFER TO SECTION 6 OF MANUAL.

FIGURE 8-3. ACTUATOR AND CARRIAGE ASSEMBLIES

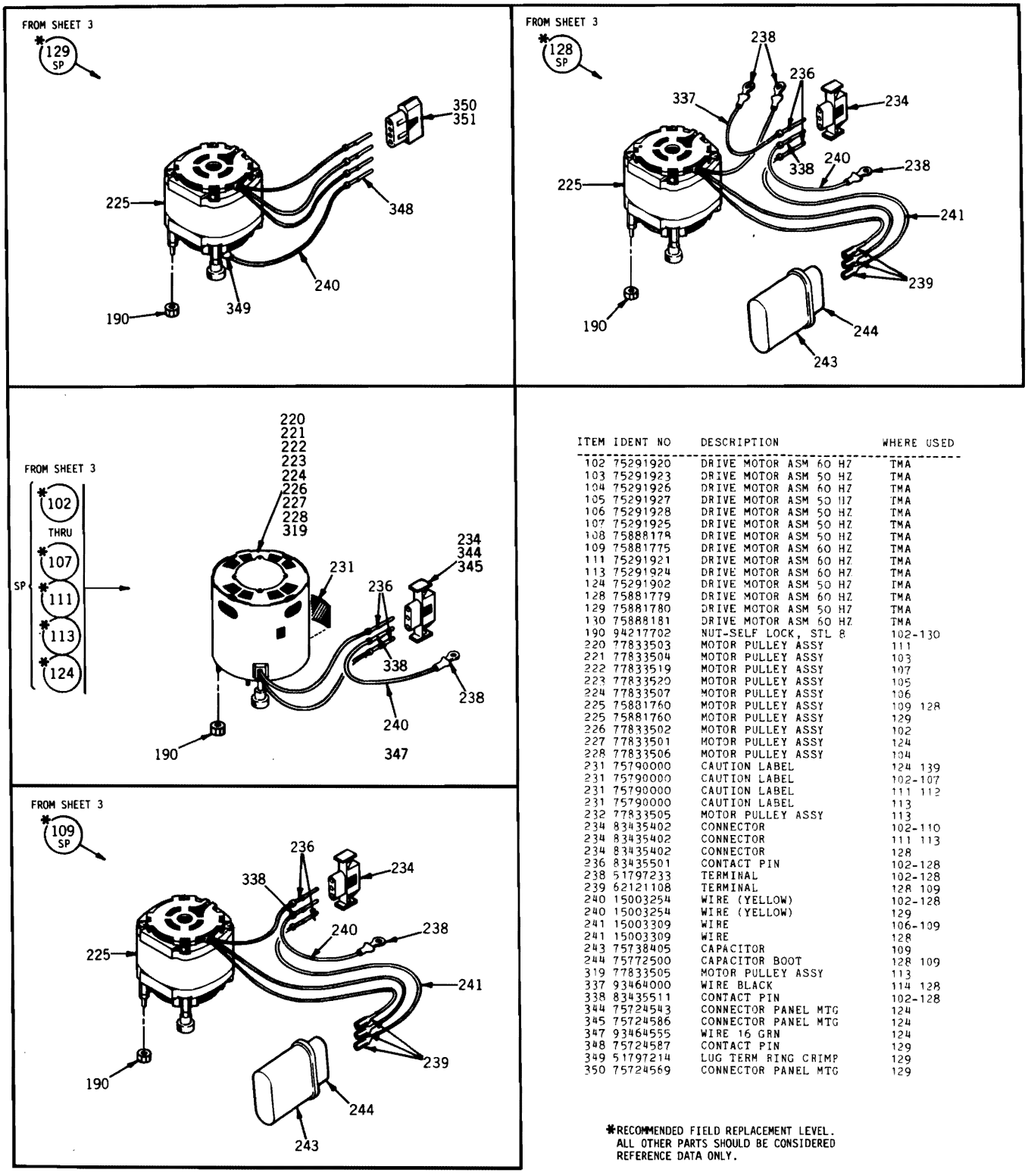

ITEM	IDENT NO	DESCRIPTION	WHERE USED
102	75291920	DRIVE MOTOR ASM 60 HZ	TMA
103	75291923	DRIVE MOTOR ASM 50 HZ	TMA
104	75291926	DRIVE MOTOR ASM 60 HZ	TMA
105	75291927	DRIVE MOTOR ASM 50 HZ	TMA
106	75291928	DRIVE MOTOR ASM 50 HZ	TMA
107	75291925	DRIVE MOTOR ASM 50 HZ	TMA
108	75888178	DRIVE MOTOR ASM 50 HZ	TMA
109	75881775	DRIVE MOTOR ASM 60 HZ	TMA
111	75291921	DRIVE MOTOR ASM 60 HZ	TMA
113	75291924	DRIVE MOTOR ASM 60 HZ	TMA
124	75291902	DRIVE MOTOR ASM 50 HZ	TMA
128	75881779	DRIVE MOTOR ASM 60 HZ	TMA
129	75881780	DRIVE MOTOR ASM 50 HZ	TMA
130	75888181	DRIVE MOTOR ASM 60 HZ	TMA
190	94217702	NUT-SELF LOCK, STL 8	102-130
220	77833503	MOTOR PULLEY ASSY	111
221	77833504	MOTOR PULLEY ASSY	103
222	77833519	MOTOR PULLEY ASSY	107
223	77833520	MOTOR PULLEY ASSY	105
224	77833507	MOTOR PULLEY ASSY	106
225	75881760	MOTOR PULLEY ASSY	109 128
225	75881760	MOTOR PULLEY ASSY	129
226	77833502	MOTOR PULLEY ASSY	102
227	77833501	MOTOR PULLEY ASSY	124
228	77833506	MOTOR PULLEY ASSY	104
231	75790000	CAUTION LABEL	124 139
231	75790000	CAUTION LABEL	102-107
231	75790000	CAUTION LABEL	111 112
231	75790000	CAUTION LABEL	113
232	77833505	MOTOR PULLEY ASSY	113
234	83435402	CONNECTOR	102-110
234	83435402	CONNECTOR	111 113
234	83435402	CONNECTOR	128
236	83435501	CONTACT PIN	102-128
238	51797233	TERMINAL	102-128
239	62121108	TERMINAL	128 109
240	15003254	WIRE (YELLOW)	102-128
240	15003254	WIRE (YELLOW)	129
241	15003309	WIRE	106-109
241	15003309	WIRE	128
243	75738405	CAPACITOR	109
244	75772500	CAPACITOR BOOT	128 109
319	77833505	MOTOR PULLEY ASSY	113
337	93464000	WIRE BLACK	114 128
338	83435511	CONTACT PIN	102-128
344	75724543	CONNECTOR PANEL MTG	124
345	75724586	CONNECTOR PANEL MTG	124
347	93464555	WIRE 16 GRN	124
348	75724587	CONTACT PIN	129
349	51797214	LUG TERM RING CRIMP	129
350	75724569	CONNECTOR PANEL MTG	129

*RECOMMENDED FIELD REPLACEMENT LEVEL. ALL OTHER PARTS SHOULD BE CONSIDERED REFERENCE DATA ONLY.

FIGURE 8-4. DRIVE MOTOR ASSEMBLY (SHEET 1 OF 2)

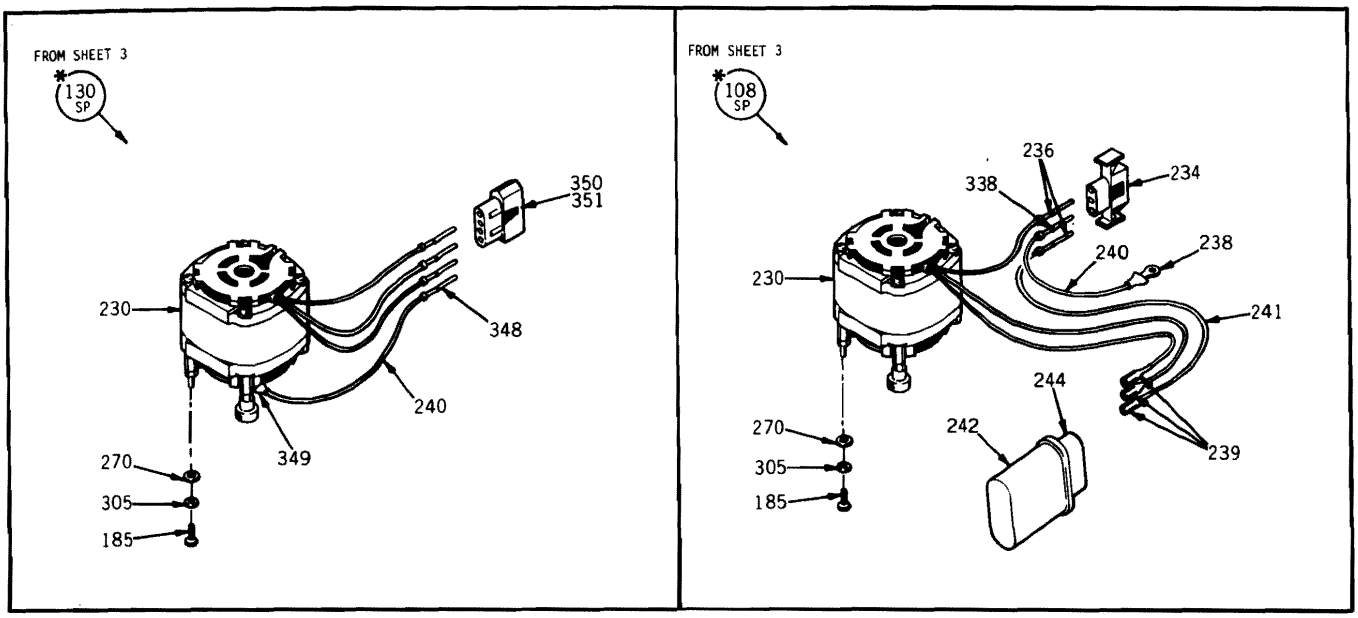

ITEM	IDENT NO	DESCRIPTION	WHERE USED
185	10127123	SCREW	108 130
229	75881768	MOTOR PULLEY ASSY	108
230	75881762	MOTOR PULLEY ASSY	130
234	83435402	CONNECTOR	108
236	83435501	CONTACT PIN	108
238	51797233	TERMINAL	108
239	62121108	TERMINAL	108
240	15003254	WIRE (YELLOW)	108 130
241	15003309	WIRE	108
242	75738490	CAPACITOR	108
244	75772500	CAPACITOR BOOT	108
270	10125606	WASHER	108 130
305	10125804	LK WASHER	108 130
338	83435511	CONTACT PIN	108
348	75724587	CONTACT PIN	130
349	51797214	LUG TERM RING CRIMP	130
350	75724569	CONNECTOR PANEL MTG	130
351	75724585	CONNECTOR PANEL MTG	130

*RECOMMENDED FIELD REPLACEMENT LEVEL. ALL OTHER PARTS SHOULD BE CONSIDERED REFERENCE DATA ONLY.

FIGURE 8-4. DRIVE MOTOR ASSEMBLY (SHEET 2 OF 2)

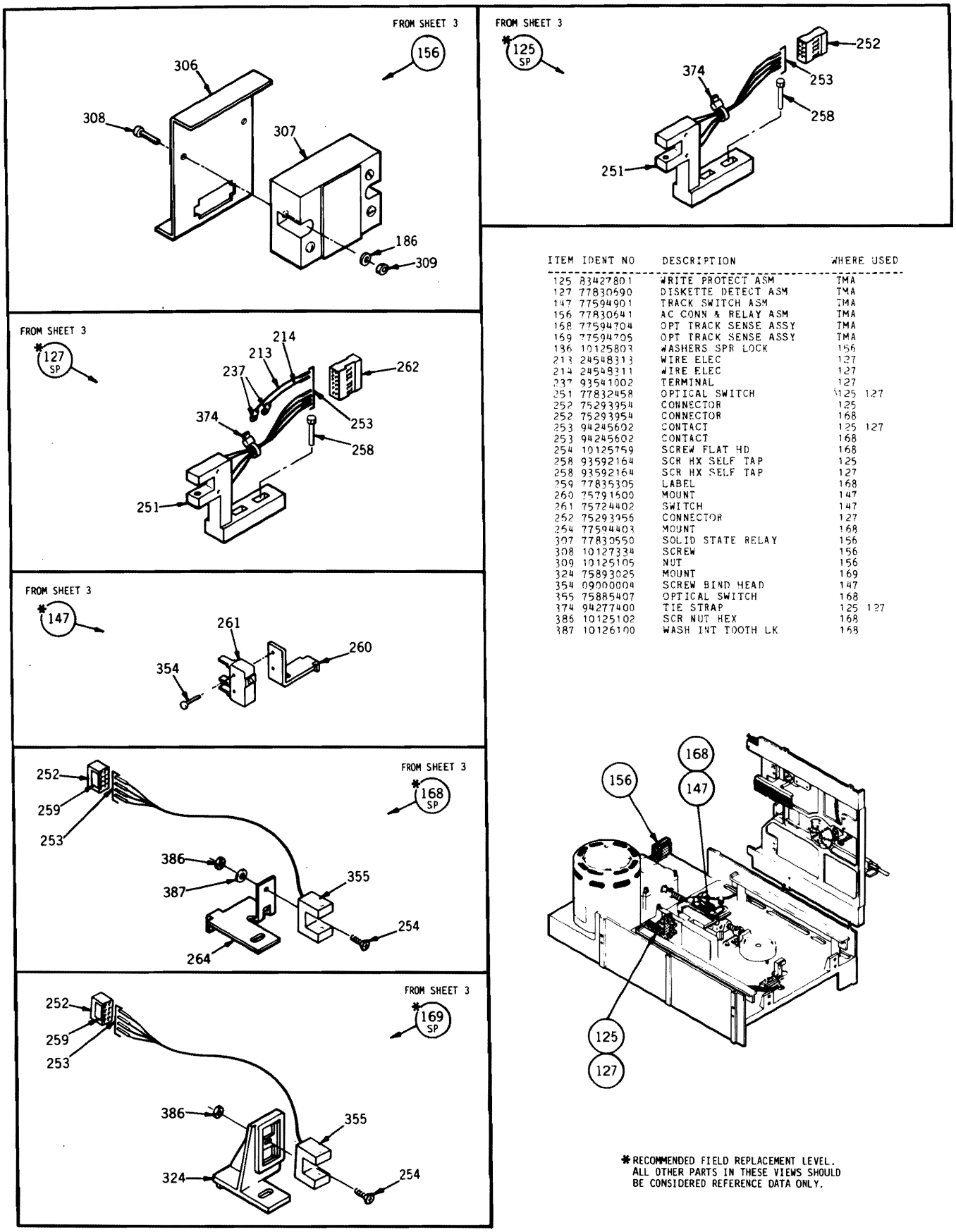

ITEM	IDENT NO	DESCRIPTION	WHERE USED
125	83427801	WRITE PROTECT ASM	TMA
127	77830690	DISKETTE DETECT ASM	TMA
147	77594901	TRACK SWITCH ASM	TMA
156	77830641	AC CONN & RELAY ASM	TMA
168	77594704	OPT TRACK SENSE ASSY	TMA
169	77594705	OPT TRACK SENSE ASSY	TMA
186	10125803	WASHERS SPR LOCK	156
213	24548313	WIRE ELEC	127
214	24548311	WIRE ELEC	127
237	93541002	TERMINAL	127
251	77832458	OPTICAL SWITCH	125 127
252	75293954	CONNECTOR	125
252	75293954	CONNECTOR	168
253	94245602	CONTACT	125 127
253	94245602	CONTACT	168
254	10125759	SCREW FLAT HD	168
258	93592164	SCR HX SELF TAP	125
258	93592164	SCR HX SELF TAP	127
259	77835305	LABEL	168
260	75791600	MOUNT	147
261	75724402	SWITCH	147
262	75293956	CONNECTOR	127
264	77594403	MOUNT	168
307	77830550	SOLID STATE RELAY	156
308	10127334	SCREW	156
309	10125105	NUT	156
324	75893025	MOUNT	169
354	09000004	SCREW BIND HEAD	147
355	75885407	OPTICAL SWITCH	168
374	94277400	TIE STRAP	125 127
386	10125102	SCR NUT HEX	168
387	10126100	WASH INT TOOTH LK	168

*RECOMMENDED FIELD REPLACEMENT LEVEL. ALL OTHER PARTS IN THESE VIEWS SHOULD BE CONSIDERED REFERENCE DATA ONLY.

FIGURE 8-5. MISCELLANEOUS SUB-ASSEMBLIES

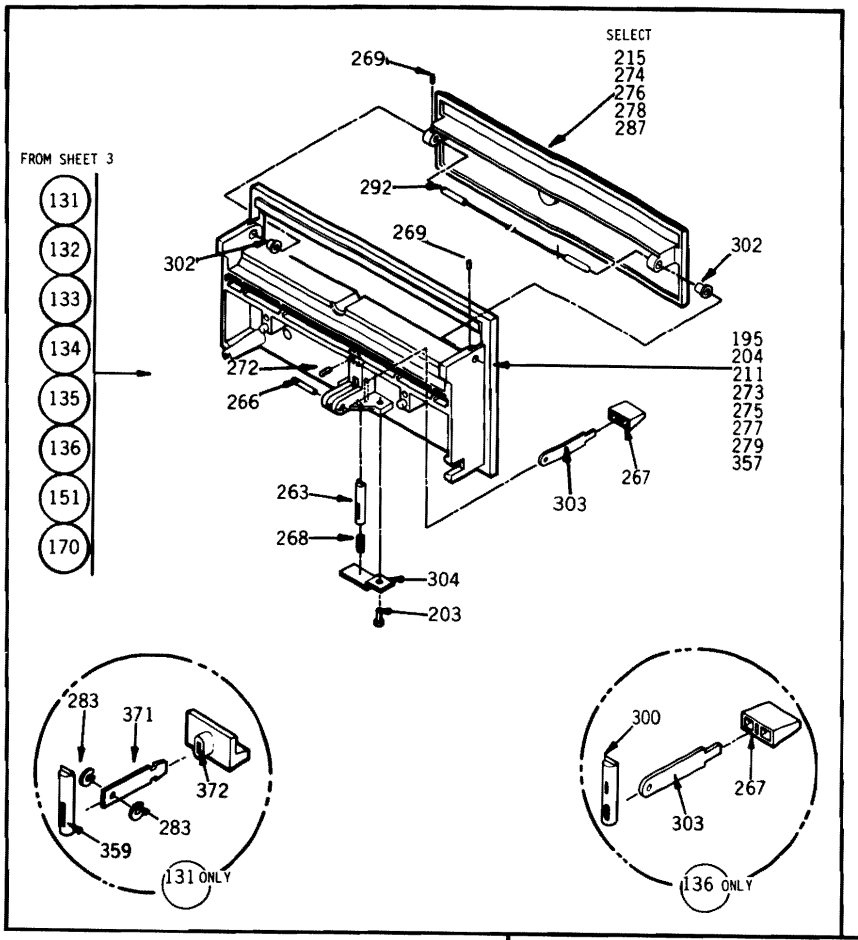

ITEM	IDENT NO	DESCRIPTION	WHERE USED
122	94277416	STRAP, CABLE TIE	161
131	83401806	FRONT PANEL ASM	TMA
132	83401801	FRONT PANEL ASM	TMA
133	83401802	FRONT PANEL ASM	TMA
134	83401803	FRONT PANEL ASM	TMA
135	83401804	FRONT PANEL ASM	TMA
136	83401805	FRONT PANEL ASM	TMA
151	83401809	FRONT PANEL ASM	TMA
161	77834543	FRONT PANEL ASSY	TMA
170	83401808	FRONT PANEL ASSY	TMA
195	83426624	PANEL FRONT FIN BLK	132
203	93592162	SCR HX WASHER SLF TA	131-136
203	93592162	SCR HX WASHER SLF TA	161 170
204	75898043	PANEL, FRONT, FIN BLK	151
211	83426626	PANEL FRONT FIN BLU	170
215	75812126	DOOR FINISHED BLU	170
245	77835131	SOLENOID BRKT	295
246	77834212	SOLENOID	295
247	93530103	PIN ROLL	295
248	75806507	WASHER	295
249	77834323	SPRING	295
263	83402301	LATCH-DOOR INJEC MOL	132-135
263	83402301	LATCH-DOOR INJEC MOL	170
265	77834318	LEVER-DOOR	161
266	92096099	PIN-GROOVED	131-136
266	92096099	PIN-GROOVED	161 170
267	75292700	KNOB-LEVER	132-136
267	75292700	KNOB-LEVER	170
268	83401200	SPRING-LATCH	131-136
268	83401200	SPRING-LATCH	161 170
269	83413406	SCR SET SOC HD 6-32	131-136
269	83413406	SCR SET SOC HD 6-32	161 170
271	75292701	KNOB-LEVER	161
272	83413404	SCREW-SELF LOCKING	131-136
272	83413404	SCREW-SELF LOCKING	150
273	83426621	PANEL FRONT, BLACK HW	133
274	75812121	DOOR, FINISHED, PA-BLK	133
275	83426622	PANEL FRONT, WHITE HW	134
276	75812122	DOOR, FINISHED, PA-WHT	134
277	83426623	PANEL FRONT, FIN BLUE	135
278	75812123	DOOR, FINISHED, PA-BLU	135
279	83461110	FRONT PANEL FINISHED	136

ITEM	IDENT NO	DESCRIPTION	WHERE USED
283	75881371	SHIM	131
285	75896352	DOOR LEVER SPRING	161
287	75812124	DOOR FINISHED BLACK	132 136
287	75812124	DOOR FINISHED BLACK	131 161
292	83403202	BAR TORSION DOOR	131-136
292	83403202	BAR TORSION DOOR	161 170
293	83461111	FRONT PANEL	161
295	77835133	DOOR LK ASSY	161
296	91976207	SCREW	161
297	77833702	HARNESS DR LK	161
298	75810703	RETAINING RING	161
299	75810701	DIODE LIGHT	161
300	83461200	LATCH DOOR	136
302	83401500	BUSHING-DOOR INJECT	131-136
302	83401500	BUSHING-DOOR INJECT	161 170
303	75746000	LEVER-DOOR	132-136
303	75746000	LEVER-DOOR	170
304	75746800	BRACKET LATCH	131-136
304	75746800	BRACKET LATCH	161 170
327	10127321	SCR PAN HD	295
332	75889161	LATCH DOOR	161
357	77832410	PANEL FRONT BLK-BURR	131
359	77830977	LATCH DOOR	131
371	75881370	LEVER DOOR	131
372	77832119	BUTTON LATCH	131
378	95862300	ANCHOR CABLE TIE	161
379	77835132	SPACER BKT	295

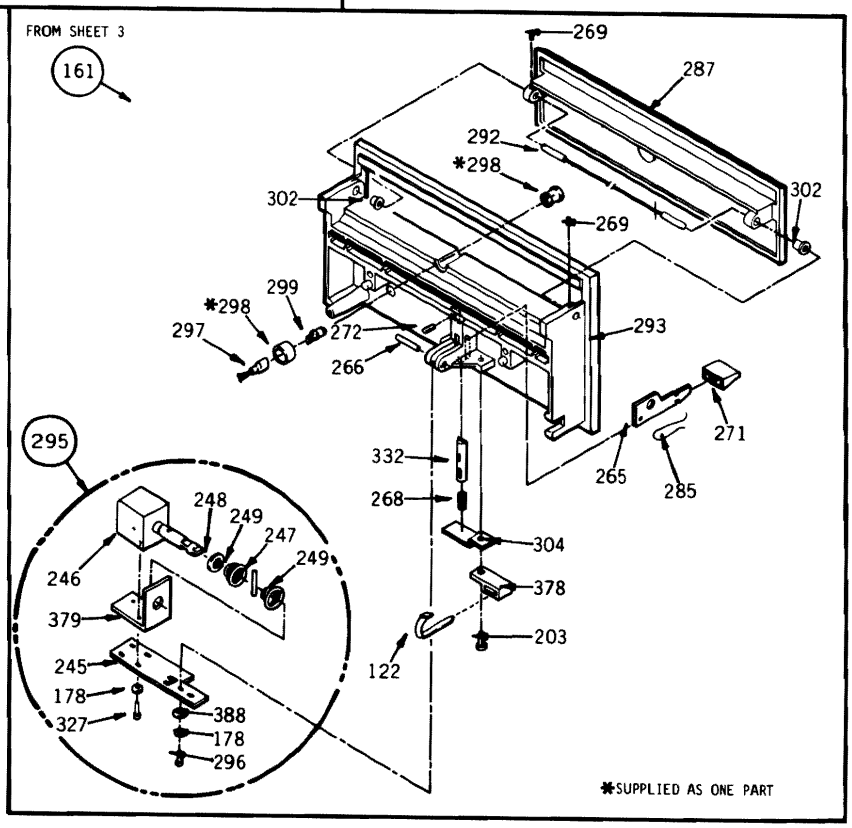

FIGURE 8-6. FRONT PANEL ASSEMBLY (SHEET 1 OF 2)

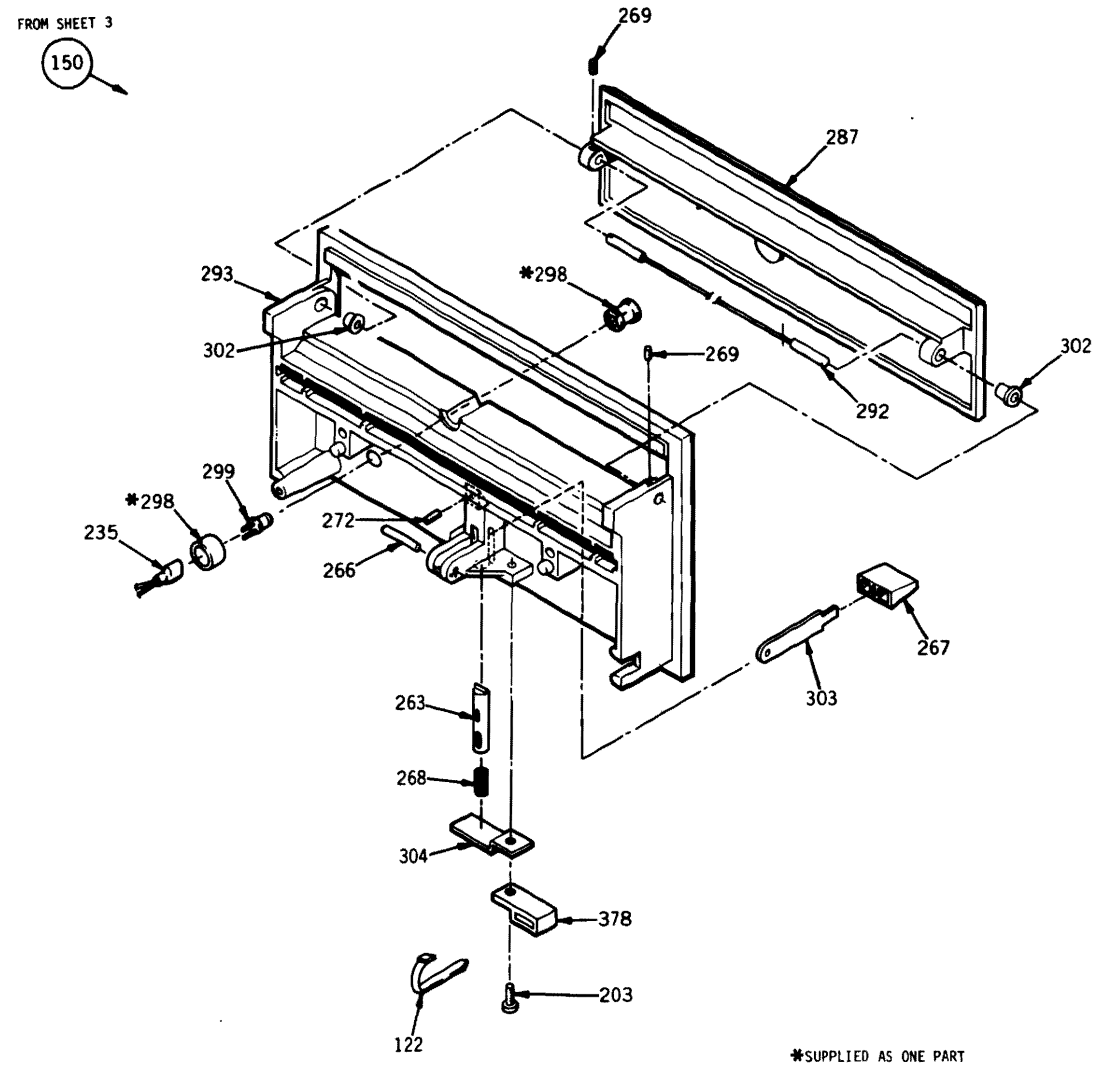

ITEM	IDENT NO	DESCRIPTION	WHERE USED
122	94277416	STRAP, CABLE TIE	150
150	75898080	FRONT PANEL ASM	TMA
203	93592162	SCR HX WASHER SLF TA	150
235	75898086	HARNESS	150
263	93402301	LATCH-DOOR INJEC MOL	150
266	92096099	PIN-GROOVED	150
267	75292700	KNOB-LEVER	150
268	83401200	SPRING-LATCH	150
269	93413406	SCR SET SOC HD 6-32	150
272	83413404	SCREW-SELF LOCKING	161 170
287	75812124	DOOR FINISHED BLACK	150
292	93403202	BAR TORSION DOOR	150
293	93461111	FRONT PANEL	150
298	75810703	RETAINING RING	150
299	75810701	DIODE LIGHT	150
302	83401500	BUSHING-DOOR INJECT	150
303	75746000	LEVER-DOOR	150
304	75746800	BRACKET LATCH	150
378	95862300	ANCHOR CABLE TIE	150

FIGURE 8-6. FRONT PANEL ASSEMBLY (SHEET 2 OF 2)

8.6 PARTS LIST INSTRUCTIONS

8.6.1 ILLUSTRATION PARTS LISTS

The parts list for each illustration is an extract from the Top-Down Assembly/ Component Parts list and contains only those parts depicted. Refer to paragraph 8.6.2 for explanation of parts list.

8.6.2 TOP-DOWN ASSEMBLY/COMPONENT PARTS LIST

a. Starts at TMA level and lists all parts in Item Number sequence.
b. Correlates Item numbers with part Identification numbers and the Description of each.
c. Identifies where each part is used (where used column) within the device by listing the item number(s) of the next higher assembly.

NOTE

Where used data for Figure 8-1 is labeled TMA. Refer to Table 8-1 for correct application of parts (refer to paragraph 8.4).

d. Defines the location of each part by listing the sheet number(s) where depicted.

NOTE

The same part may be used in any number of assemblies or sheet locations.

8.6.3 CROSS REFERENCE INDEX

a. Lists all parts in numeric sequence (by Identification Number).
b. In conjunction with the referenced sheet number (third column) and illustrations defines the physical location of each item identified.

8.6.4 SHEET NUMBER REFERENCING

Sheet number references of Parts Lists and Illustrations refers to sheet locations in this section. Example: Sheet reference 3 represents sheet 8-3, sheet 4 represents sheet 8-4, etc.

8.7 SPARE PARTS (SP)

This Illustrated Parts Breakdown is complete to the extent that all parts and assemblies are depicted and identified. Replacement part availability depends on the materials and provisioning operation of the supplier.

To assist the service representative in selecting replacement parts with minimum requisitioning lead times, engineering recommended spare parts which reflect the intended service level of the device are identified with the letters SP adjacent to the item number on the face of each illustraion. Replacement non-spared items will require longer requisitioning lead times.

TOP-DOWN ASSEMBLY/COMPONENT PARTS LIST

ITEM	IDENT NO	DESCRIPTION	WHERE USED	SHEET
101	83458201	CHASSIS ASM-COMMON PARTS	TMA	S3
101	83458201	CHASSIS ASM-COMMON PARTS	TMA	S4
101	83458201	CHASSIS ASM-COMMON PARTS	TMA	S5
102	75291920	DRIVE MOTOR ASM 60 HZ	TMA	S3
102	75291920	DRIVE MOTOR ASM 60 HZ	TMA	S7
103	75291923	DRIVE MOTOR ASM 50 HZ	TMA	S3
103	75291923	DRIVE MOTOR ASM 50 HZ	TMA	S7
104	75291926	DRIVE MOTOR ASM 60 HZ	TMA	S3
104	75291926	DRIVE MOTOR ASM 60 HZ	TMA	S7
105	75291927	DRIVE MOTOR ASM 50 HZ	TMA	S3
105	75291927	DRIVE MOTOR ASM 50 HZ	TMA	S7
106	75291928	DRIVE MOTOR ASM 50 HZ	TMA	S3
106	75291928	DRIVE MOTOR ASM 50 HZ	TMA	S7
107	75291925	DRIVE MOTOR ASM 50 HZ	TMA	S3
107	75291925	DRIVE MOTOR ASM 50 HZ	TMA	S7
108	75888178	DRIVE MOTOR ASM 50 HZ	TMA	S3
108	75888178	DRIVE MOTOR ASM 50 HZ	TMA	S7
109	75881775	DRIVE MOTOR ASM 60 HZ	TMA	S3
109	75881775	DRIVE MOTOR ASM 60 HZ	TMA	S7
111	75291921	DRIVE MOTOR ASM 60 HZ	TMA	S3
111	75291921	DRIVE MOTOR ASM 60 HZ	TMA	S7
113	75291924	DRIVE MOTOR ASM 60 HZ	TMA	S3
113	75291924	DRIVE MOTOR ASM 60 HZ	TMA	S7
115	75891480	CHASSIS ASM-COMMON PARTS	TMA	S3
115	75891480	CHASSIS ASM-COMMON PARTS	TMA	S4
115	75891480	CHASSIS ASM-COMMON PARTS	TMA	S5
122	94277416	STRAP, CABLE TIE	TMA	S3
122	94277416	STRAP, CABLE TIE	161	S10
122	94277416	STRAP, CABLE TIE	150	S11
124	75291902	DRIVE MOTOR ASM 50 HZ	TMA	S3
124	75291902	DRIVE MOTOR ASM 50 HZ	TMA	S7
125	83427801	WRITE PROTECT ASM	TMA	S3
125	83427801	WRITE PROTECT ASM	TMA	S9
127	77830690	DISKETTE DETECT ASM	TMA	S3
127	77830690	DISKETTE DETECT ASM	TMA	S9
128	75881779	DRIVE MOTOR ASM 60 HZ	TMA	S3
128	75881779	DRIVE MOTOR ASM 60 HZ	TMA	S7
129	75881780	DRIVE MOTOR ASM 50 HZ	TMA	S3
129	75881780	DRIVE MOTOR ASM 50 HZ	TMA	S7
130	75888181	DRIVE MOTOR ASM 60 HZ	TMA	S3
130	75888181	DRIVE MOTOR ASM 60 HZ	TMA	S7
131	83401806	FRONT PANEL ASM	TMA	S3
131	83401806	FRONT PANEL ASM	TMA	S10
132	83401801	FRONT PANEL ASM	TMA	S3
132	83401801	FRONT PANEL ASM	TMA	S10
133	83401802	FRONT PANEL ASM	TMA	S3
133	83401802	FRONT PANEL ASM	TMA	S10
134	83401803	FRONT PANEL ASM	TMA	S3
134	83401803	FRONT PANEL ASM	TMA	S10
135	83401804	FRONT PANEL ASM	TMA	S3
135	83401804	FRONT PANEL ASM	TMA	S10
136	83401805	FRONT PANEL ASM	TMA	S3
136	83401805	FRONT PANEL ASM	TMA	S10
137	75791510	ACTUATOR ASM	TMA	S3
137	75791510	ACTUATOR ASM	TMA	S6
138	75791511	ACTUATOR ASM	TMA	S3
138	75791511	ACTUATOR ASM	TMA	S6
139	75774736	CLIP-PUSH IN	TMA	S3
140	77830685	UPPER HARNESS ASM	TMA	S3
141	75747301	UPPER HARNESS ASM	TMA	S3
142	83403504	LOWER HARNES ASM	TMA	S3
143	83403503	LOWER HARNESS ASM	TMA	S3
144	83403700	CONNECTOR BRACKET	TMA	S3
145	75272300	CONNECTOR BRACKET	TMA	S3
146	77830538	CSA LABEL	TMA	S3
147	77594901	TRACK SWITCH ASM	TMA	S3
147	77594901	TRACK SWITCH ASM	TMA	S9
148	83460101	AMP CONN KIT	TMA	S3
149	75746702	CAPACITOR BRACKET	TMA	S3
150	75898080	FRONT PANEL ASM	TMA	S3
150	75898080	FRONT PANEL ASM	TMA	S11
151	83401809	FRONT PANEL ASM	TMA	S3
151	83401809	FRONT PANEL ASM	TMA	S10
152	77832691	MOUNTING KIT	TMA	S3
152	77832691	MOUNTING KIT	TMA	S4
153	92602001	CLAMP	101 115	S4
155	93592240	SCREW-WASHER	TMA	S3
156	77830641	AC CONN & RELAY ASM	TMA	S3
156	77830641	AC CONN & RELAY ASM	TMA	S9
157	77830995	COVER	TMA	S3
158	17901508	SCREW	TMA	S3
160	77834336	LABEL, FCO	TMA	S3
161	77834543	FRONT PANEL ASSY	TMA	S3
161	77834543	FRONT PANEL ASSY	TMA	S10
162	75746701	CAPACITOR BRACKET	TMA	S3
164	77836055	LABEL	TMA	S3
168	77594704	OPT TRACK SENSE ASSY	TMA	S3
168	77594704	OPT TRACK SENSE ASSY	TMA	S9
169	77594705	OPT TRACK SENSE ASSY	TMA	S3
169	77594705	OPT TRACK SENSE ASSY	TMA	S9
170	83401808	FRONT PANEL ASSY	TMA	S3
170	83401808	FRONT PANEL ASSY	TMA	S10
171	83402101	CONE ASM	101 115	S5
172	75273200	BUSHING	101 115	S5
173	75747202	SOLENOID	101 115	S5
174	77834331	EXTENSION ARMATURE	101 115	S5
175	77834326	BAIL ARMATURE	101 115	S5
176	75885163	PUSH ROD ASSY	101 115	S5
177	75882711	CARRIAGE STOP KIT	137 138	S6

ITEM	IDENT NO	DESCRIPTION	WHERE USED	SHEET
178	10125801	WASHERS SPR LOCK	101 115	S4
178	10125801	WASHERS SPR LOCK	101 115	S5
179	77830732	FOAM PAD	101 115	S5
180	75293203	BELT-FLAT	101 115	S4
181	75891000	SPRING-COMPRESSION	101 115	S5
182	75292617	SPRING-COMPRESSION	101 115	S5
183	75774732	CLIP-PUSH IN	101 115	S4
185	10127123	SCREW	108 130	S8
186	10125803	WASHERS SPR LOCK	101 115	S4
186	10125803	WASHERS SPR LOCK	101 115	S5
186	10125803	WASHERS SPR LOCK	156	S9
187	10125605	WASHERS PLAIN	101 115	S4
188	77832145	LABEL IDENT	101 115	S4
189	77835200	WASHER, NYLON	101 115	S5
190	94217702	NUT-SELF LOCK, STL 8	102-130	S7
191	92073070	BEARING FLANGED	101 115	S4
191	92073070	BEARING FLANGED	171	S5
192	93529005	WASHER-SPRING WAVE	101 115	S4
193	92033037	RING RETAINING	101 115	S5
194	92033038	RETAINING RING	101 171	S5
194	92033038	RETAINING RING	115	S5
195	83426624	PANEL FRONT FIN BLK	132	S10
196	16402506	CLAMP CABLE	101 115	S4
197	09000005	SCREW BIND HEAD	101 115	S5
198	09000202	SCREW BIND HEAD	101 115	S5
199	09000403	SCREW BIND HEAD	101 115	S4
200	09000504	SCREW BIND HEAD	101 115	S5
201	10126219	SCR HEX SOC HD CAP	101 115	S5
202	10126222	SCREW HEX SOC HD	101 115	S4
203	93592162	SCR HX WASHER SLF TA	131-136	S10
203	93592162	SCR HX WASHER SLF TA	161 170	S10
203	93592162	SCR HX WASHER SLF TA	150	S11
204	75898043	PANEL, FRONT, FIN BLK	151	S10
205	93592086	SCR HEX SELF TAP	101 115	S4
205	93592086	SCR HEX SELF TAP	101 115	S5
206	93820248	SCREW-SELF LOCKING	101 115	S5
207	83411202	BUMPER DOOR	101 115	S5
208	92602003	CLAMP, CABLE-NYLON	101 115	S4
209	10126214	SCR HEX SOC HD CAP	101 115	S4
210	83427900	PLATE-NUT	101 115	S4
211	83426626	PANEL FRONT FIN BLU	170	S10
212	94279109	FLAT WASHER	101 115	S5
213	24548313	WIRE ELEC	127	S9
214	24548311	WIRE ELEC	127	S9
215	75812126	DOOR FINISHED BLU	170	S10
218	75882450	CARRIAGE STOP	101 115	S4
219	93592488	SCREW	101 115	S4
220	77833503	MOTOR PULLEY ASSY	111	S7
221	77833504	MOTOR PULLEY ASSY	103	S7
222	77833519	MOTOR PULLEY ASSY	107	S7
223	77833520	MOTOR PULLEY ASSY	105	S7
224	77833507	MOTOR PULLEY ASSY	106	S7
225	75881760	MOTOR PULLEY ASSY	109 128	S7
225	75881760	MOTOR PULLEY ASSY	129	S7
226	77833502	MOTOR PULLEY ASSY	102	S7
227	77833501	MOTOR PULLEY ASSY	124	S7
228	77833506	MOTOR PULLEY ASSY	104	S7
229	75881768	MOTOR PULLEY ASSY	108	S8
230	75881762	MOTOR PULLEY ASSY	130	S8
231	75790000	CAUTION LABEL	137 138	S6
231	75790000	CAUTION LABEL	124 139	S7
231	75790000	CAUTION LABEL	102-107	S7
231	75790000	CAUTION LABEL	111 112	S7
231	75790000	CAUTION LABEL	113	S7
232	77833505	MOTOR PULLEY ASSY	113	S7
234	83435402	CONNECTOR	102-110	S7
234	83435402	CONNECTOR	111 113	S7
234	83435402	CONNECTOR	128	S7
234	83435402	CONNECTOR	108	S8
235	75898086	HARNESS	150	S11
236	83435501	CONTACT PIN	102-128	S7
236	83435501	CONTACT PIN	108	S8
237	93541002	TERMINAL	127	S9
238	51797233	TERMINAL	102-128	S7
238	51797233	TERMINAL	108	S8
239	62121108	TERMINAL	128 109	S7
239	62121108	TERMINAL	108	S8
240	15003254	WIRE (YELLOW)	102-128	S7
240	15003254	WIRE (YELLOW)	129	S7
240	15003254	WIRE (YELLOW)	108 130	S8
241	15003309	WIRE	106-109	S7
241	15003309	WIRE	128	S7
241	15003309	WIRE	108	S8
242	75738480	CAPACITOR	108	S8
243	75738405	CAPACITOR	109	S7
244	75772500	CAPACITOR BOOT	128 109	S7
244	75772500	CAPACITOR BOOT	108	S8
245	77835131	SOLENOID BRKT	295	S10
246	77834212	SOLENOID	295	S10
247	93530103	PIN ROLL	295	S10
248	75806507	WASHER	295	S10
249	77834323	SPRING	295	S10
250	93592482	SCR HEX HD	101 115	S5
251	77832458	OPTICAL SWITCH	125 127	S9
252	75293954	CONNECTOR	125	S9
252	75293954	CONNECTOR	168	S9
253	94245602	CONTACT	125 127	S9
253	94245602	CONTACT	168	S9
254	10125759	SCREW FLAT HD	168	S9

TOP-DOWN ASSEMBLY/COMPONENT PARTS LIST (CONT.)

ITEM	IDENT NO	DESCRIPTION	WHERE USED	SHEET
255	10127131	SCREW	152	S4
256	10125805	LOCK WASHER	152	S4
257	83460400	HOLDER PAD	326	S6
258	93592164	SCR HX SELF TAP	125	S9
258	93592164	SCR HX SELF TAP	127	S9
259	77835305	LABEL	168	S9
260	75791600	MOUNT	147	S9
261	75724402	SWITCH	147	S9
262	75293956	CONNECTOR	127	S9
263	83402301	LATCH-DOOR INJEC MOL	132-135	S10
263	83402301	LATCH-DOOR INJEC MOL	170	S10
263	83402301	LATCH-DOOR INJEC MOL	150	S11
264	77594403	MOUNT	168	S9
265	77834318	LEVER-DOOR	161	S10
266	92096099	PIN-GROOVED	131-136	S10
266	92096099	PIN-GROOVED	161 170	S10
266	92096099	PIN-GROOVED	150	S11
267	75292700	KNOB-LEVER	132-136	S10
267	75292700	KNOB-LEVER	170	S10
267	75292700	KNOB-LEVER	150	S11
268	83401200	SPRING-LATCH	131-136	S10
268	83401200	SPRING-LATCH	161 170	S10
268	83401200	SPRING-LATCH	150	S11
269	83413406	SCR SET SOC HD 6-32	131-136	S10
269	83413406	SCR SET SOC HD 6-32	161 170	S10
269	83413406	SCR SET SOC HD 6-32	150	S11
270	10125606	WASHER	108 130	S8
271	75292701	KNOB-LEVER	161	S10
272	83413404	SCREW-SELF LOCKING	131-136	S10
272	83413404	SCREW-SELF LOCKING	161 170	S11
272	83413404	SCREW-SELF LOCKING	150	S10
273	83426621	PANEL FRONT, BLACK HW	133	S10
274	75812121	DOOR, FINISHED, PA-BLK	133	S10
275	83426622	PANEL FRONT, WHITE HW	134	S10
276	75812122	DOOR, FINISHED, PA-WHT	134	S10
277	83426623	PANEL FRONT, FIN BLUE	135	S10
278	75812123	DOOR, FINISHED, PA-BLU	135	S10
279	83461110	FRONT PANEL FINISHED	136	S10
280	75747801	STEPPER MOTOR ASM	137 138	S6
281	77839902	CARRIAGE ASM	137	S6
283	75881371	SHIM	131	S10
284	77594000	SPRING-CARRIAGE	137 138	S6
285	75896352	DOOR LEVER SPRING	161	S10
286	10126209	SCR-SOC HP CAP	281 318	S6
287	75812124	DOOR FINISHED BLACK	132 136	S10
287	75812124	DOOR FINISHED BLACK	131 161	S10
287	75812124	DOOR FINISHED BLACK	150	S11
288	75813000	RETAINER-BEARING	137 138	S6
289	92073020	BEARING FLANGED	137 138	S6
290	94217207	BRG BALL-EXT INNER R	137 138	S6
291	93529001	WASHER-SPRING WAVE	137 138	S6
292	83403202	BAR TORSION DOOR	131-136	S10
292	83403202	BAR TORSION DOOR	161 170	S10
292	83403202	BAR TORSION DOOR	150	S11
293	83461111	FRONT PANEL	161	S10
293	83461111	FRONT PANEL	150	S11
294	77832456	LUBRICANT	137 138	S6
295	77835133	DOOR LK ASSY	161	S10
296	91976207	SCREW	161	S10
297	77833702	HARNESS DR LK	161	S10
298	75810703	RETAINING RING	161	S10
298	75810703	RETAINING RING	150	S11
299	75810701	DIODE LIGHT	161	S10
299	75810701	DIODE LIGHT	150	S11
300	83461200	LATCH DOOR	136	S10
301	77830975	ADAPTER	152	S4
302	83401500	BUSHING-DOOR INJECT	131-136	S10
302	83401500	BUSHING-DOOR INJECT	161 170	S10
302	83401500	BUSHING-DOOR INJECT	150	S11
303	75746000	LEVER-DOOR	132-136	S10
303	75746000	LEVER-DOOR	170	S10
303	75746000	LEVER-DOOR	150	S11
304	75746800	BRACKET LATCH	131-136	S10
304	75746800	BRACKET LATCH	161 170	S10
304	75746800	BRACKET LATCH	150	S11
305	10125804	LK WASHER	108 130	S8
306	83460701	PAD HEAD LOAD	326	S6
307	77830550	SOLID STATE RELAY	156	S9
308	10127334	SCREW	156	S9
309	10125105	NUT	156	S9
310	75790803	SHAFT	171	S5
311	83426400	EXPANDER-CONE	171	S5
312	77830481	CONE-DISK LOAD	171	S5
313	83402200	SPRING CONE	171	S5
315	83409701	SPRING-GARTER	171	S5
316	94047069	WASHER	171	S5
317	94047070	WASHER	171	S5
318	77839901	CARRIAGE ASSY	138	S6
319	77833505	MOTOR PULLEY ASSY	113	S7
320	75812011	SUPPORT DIE CAST MACHINED	368	S5
321	75292807	BEARING-CYLINDRICAL	368	S5
322	75813201	BUSHING, PUSH ROD MOLDED	368	S5
323	75813202	BUSHING, PUSH ROD MOLDED	368	S5
324	75893025	MOUNT	169	S9
325	77603100	ARM-HEAD LOAD	281 318	S6
326	77830482	HOLDER-PAD ASSY	281 318	S6
327	10127321	SCR PAN HD	295	S10
329	77830998	PIN CARRIAGE	281 318	S6
330	77830999	SPRING TORSION	281 318	S6

ITEM	IDENT NO	DESCRIPTION	WHERE USED	SHEET
331	94047068	WASHER, SPECIAL	281 318	S6
332	75889161	LATCH DOOR	161	S10
333	10127310	SCREW SLOTTED	281 318	S6
334	10125001	SCREW HEX HD	137 138	S6
335	94047000	WASHER	137 138	S6
336	93592160	SCREW, SELF TAP	101 115	S4
337	93464000	WIRE BLACK	114 128	S7
338	83435511	CONTACT PIN	102-128	S7
338	83435511	CONTACT PIN	108	S8
339	10126401	STAR LOCK WASHER	101 115	S4
340	75731302	ELECTRICAL SYMBOL	101 115	S4
342	77594800	DECAL	152	S4
344	75724543	CONNECTOR PANEL MTG	124	S7
345	75724586	CONNECTOR PANEL MTG	124	S7
346	83426204	CARRIAGE HEAD ASSY	281	S6
347	93464555	WIRE 16 GRN	124	S7
348	75724587	CONTACT PIN	129	S7
348	75724587	CONTACT PIN	130	S8
349	51797214	LUG TERM RING CRIMP	129	S7
349	51797214	LUG TERM RING CRIMP	130	S8
350	75724569	CONNECTOR PANEL MTG	129	S7
350	75724569	CONNECTOR PANEL MTG	130	S8
351	75724585	CONNECTOR PANEL MTG	130	S8
353	75724401	ACTUATOR SWITCH	101 115	S5
354	09000004	SCREW BIND HEAD	147	S9
355	75885407	OPTICAL SWITCH	168	S9
357	77832410	PANEL FRONT BLK-BURR	131	S10
358	83426205	CARRIAGE HEAD ASSY	318	S6
359	77830977	LATCH DOOR	131	S10
360	75886086	BASE-MECHANISM, DIE	101	S4
361	83403601	SPINDLE	101 115	S4
362	75747000	SPACER BEARING	101 115	S4
363	75745200	PULLEY-SPINDLE	101 115	S4
364	75886087	BASE-MECHANISM, DIE	115	S4
365	83461800	CLAMP, STEPPER MOTOR	101 115	S4
366	75292400	GUIDE-CARRIAGE	101 115	S4
368	75812021	SUPPORT-ASSEMBLED	101	S5
369	83402803	ARM-DISK LOAD	101	S5
370	75273000	PIN DISK LOAD ARM	101 115	S5
371	75881370	LEVER DOOR	131	S10
372	77832119	BUTTON LATCH	131	S10
373	77835304	LABEL	324 358	S6
374	94277400	TIE STRAP	101	S4
374	94277400	TIE STRAP	125 127	S9
375	83427303	NUT CARRIAGE	137 138	S6
376	75812022	SUPPORT-ASSEMBLED	115	S5
377	93592486	SCREW	101 115	S4
378	95862300	ANCHOR CABLE TIE	161	S10
378	95862300	ANCHOR CABLE TIE	150	S11
379	77835132	SPACER BKT	295	S10
386	10125102	SCR NUT HEX	168	S9
387	10126100	WASH INT TOOTH LK	168	S9
388	10125603	WASHER	101 115	S4
388	10125603	WASHER	101 115	S5
389	83402804	ARM-DISK LOAD	115	S5

CROSS REFERENCE LIST

ITEM	IDENT NO	SHEET
354	09000004	S9
197	09000005	S5
198	09000202	S5
199	09000403	S4
200	09000504	S5
334	10125001	S6
386	10125102	S9
309	10125105	S9
388	10125603	S5
388	10125603	S4
187	10125605	S4
270	10125606	S8
254	10125759	S9
178	10125801	S5
178	10125801	S4
186	10125803	S9
186	10125803	S5
186	10125803	S4
305	10125804	S8
256	10125805	S4
387	10126100	S9
286	10126209	S6
209	10126214	S4
201	10126219	S5
202	10126222	S4
339	10126401	S4
185	10127123	S8
255	10127131	S4
333	10127310	S6
327	10127321	S10
308	10127334	S9
240	15003254	S8
240	15003254	S7
240	15003254	S7
241	15003309	S8
241	15003309	S7
241	15003309	S7
196	16402506	S4
158	17901508	S3
214	24548311	S9
213	24548313	S9
349	51797214	S8
349	51797214	S7
238	51797233	S8
238	51797233	S7
239	62121108	S7
239	62121108	S8
145	75272300	S3
370	75273000	S5
172	75273200	S5
124	75291902	S7
124	75291902	S3
102	75291920	S7
102	75291920	S3
111	75291921	S7
111	75291921	S3
103	75291923	S7
103	75291923	S3
113	75291924	S7
113	75291924	S3
107	75291925	S7
107	75291925	S3
104	75291926	S7
104	75291926	S3
105	75291927	S7
105	75291927	S3
106	75291928	S7
106	75291928	S3
366	75292400	S4
182	75292617	S5
267	75292700	S11
267	75292700	S10
267	75292700	S10
271	75292701	S10
321	75292807	S5
180	75293203	S4
252	75293954	S9
252	75293954	S9
262	75293956	S9
353	75724401	S5
261	75724402	S9
344	75724543	S7
350	75724569	S8
350	75724569	S7
351	75724585	S8
345	75724586	S7
348	75724587	S7
348	75724587	S8
340	75731302	S4
243	75738405	S7
242	75738480	S8
363	75745200	S4
303	75746000	S10
303	75746000	S11
303	75746000	S10
162	75746701	S3
149	75746702	S3
304	75746800	S10
304	75746800	S11
304	75746800	S10
362	75747000	S4
173	75747202	S5
141	75747301	S3
280	75747801	S6
244	75772500	S7
244	75772500	S8
183	75774732	S4
139	75774736	S3
231	75790000	S7
231	75790000	S7
231	75790000	S7
231	75790000	S7
231	75790000	S6
310	75790803	S5
137	75791510	S6
137	75791510	S3
138	75791511	S6
138	75791511	S3
260	75791600	S9
248	75806507	S10
299	75810701	S11
299	75810701	S10
298	75810703	S11
298	75810703	S10
320	75812011	S5
368	75812021	S5
376	75812022	S5
274	75812121	S10
276	75812122	S10
278	75812123	S10
287	75812124	S10
287	75812124	S11
287	75812124	S10
215	75812126	S10
288	75813000	S6
322	75813201	S5
323	75813202	S5
371	75881370	S10
283	75881371	S10
225	75881760	S7
225	75881760	S7
230	75881762	S8
229	75881768	S8
109	75881775	S7
109	75881775	S3
128	75881779	S7
128	75881779	S3
129	75881780	S7
129	75881780	S3
218	75882450	S4
177	75882711	S6
176	75885163	S5
355	75885407	S9
360	75886086	S4
364	75886087	S4
108	75888178	S7
108	75888178	S3
130	75888181	S7
130	75888181	S3
332	75889161	S10
181	75891000	S5
115	75891480	S5
115	75891480	S4
115	75891480	S3
324	75893025	S9
285	75896352	S10
204	75898043	S10
150	75898080	S11
150	75898080	S3
235	75898086	S11
284	77594000	S6
264	77594403	S9
168	77594704	S3
168	77594704	S9
169	77594705	S3
169	77594705	S9
342	77594800	S4
147	77594901	S9
147	77594901	S3
325	77603100	S6
312	77830481	S5
326	77830482	S6
146	77830538	S3
307	77830550	S9
156	77830641	S9
156	77830641	S3
140	77830685	S3
127	77830690	S9
127	77830690	S3
179	77830732	S5
301	77830975	S4
359	77830977	S10
157	77830995	S3
329	77830998	S6
330	77830999	S6
372	77832119	S10
188	77832145	S4
357	77832410	S10
294	77832456	S6
251	77832458	S9
152	77832691	S4
152	77832691	S3
227	77833501	S7
226	77833502	S7
220	77833503	S7
221	77833504	S7
232	77833505	S7
319	77833505	S7
228	77833506	S7
224	77833507	S7
222	77833519	S7
223	77833520	S7
297	77833702	S10
246	77834212	S10
265	77834318	S10
249	77834323	S10
175	77834326	S5
174	77834331	S5
160	77834336	S3
161	77834543	S3
161	77834543	S10
245	77835131	S10
379	77835132	S10
295	77835133	S10
189	77835200	S5
373	77835304	S6
259	77835305	S9
164	77836055	S3
318	77839901	S6
281	77839902	S6
268	83401200	S10
268	83401200	S11
268	83401200	S10
302	83401500	S11
302	83401500	S10
302	83401500	S10
132	83401801	S10
132	83401801	S3
133	83401802	S10
133	83401802	S3
134	83401803	S10
134	83401803	S3
135	83401804	S10
135	83401804	S3
136	83401805	S10
136	83401805	S3
131	83401806	S10
131	83401806	S3
170	83401808	S3
170	83401808	S10
151	83401809	S10
151	83401809	S3
171	83402101	S5
313	83402200	S5
263	83402301	S11
263	83402301	S10
263	83402301	S10
369	83402803	S5
389	83402804	S5
292	83403202	S10
292	83403202	S10
292	83403202	S11
143	83403503	S3
142	83403504	S3
361	83403601	S4
144	83403700	S3
315	83409701	S5
207	83411202	S5
272	83413404	S10
272	83413404	S11
272	83413404	S10
269	83413406	S11
269	83413406	S10
269	83413406	S10
346	83426204	S6
358	83426205	S6
311	83426400	S5
273	83426621	S10
275	83426622	S10
277	83426623	S10
195	83426624	S10
211	83426626	S10
375	83427303	S6
125	83427801	S9
125	83427801	S3
210	83427900	S4
234	83435402	S7
234	83435402	S7
234	83435402	S7
234	83435402	S8
236	83435501	S8
236	83435501	S7
338	83435511	S8
338	83435511	S7
101	83458201	S3
101	83458201	S5
101	83458201	S4
148	83460101	S3
257	83460400	S6
306	83460701	S6
279	83461110	S10
293	83461111	S10
293	83461111	S11
300	83461200	S10
365	83461800	S4
296	91976207	S10
193	92033037	S5
194	92033038	S5
194	92033038	S5
289	92073020	S6
191	92073070	S5
191	92073070	S4
266	92096099	S10
266	92096099	S11
266	92096099	S10
153	92602001	S4
208	92602003	S4
337	93464000	S7
347	93464555	S7
291	93529001	S6
192	93529005	S4
247	93530103	S10
237	93541002	S9
205	93592086	S4
205	93592086	S5
336	93592160	S4
203	93592162	S10
203	93592162	S11
203	93592162	S10
258	93592164	S9
258	93592164	S9
155	93592240	S3
250	93592482	S5
377	93592486	S4
219	93592488	S4
206	93820248	S5
335	94047000	S6
331	94047068	S6
316	94047069	S5
317	94047070	S5
290	94217207	S6
190	94217702	S7
253	94245602	S9
253	94245602	S9
374	94277400	S4
374	94277400	S9
122	94277416	S11
122	94277416	S10
122	94277416	S3
212	94279109	S5
378	95862300	S11
378	95862300	S10

SERVICE CODE NUMBER	IDENTIFICATION CODE NUMBER	DESCRIPTION
4822 530 80163	10125803-6	WASHER,SPRINGL.NO 6
4822 530 80173	10125801-0	WASHER,SPRINGL.NO 4
4822 532 10636	10125603-0	WASHER,PLAIN,NO.4
5322 124 24195	75738478-9	CAPACITOR
5322 124 74123	75738421-9	CAPACITOR
-		
5322 130 34753	75810701-1	DIODE LIGHT
5322 209 85928	15161600-0	IC 75461
5322 216 25306	75881950	PCB
5322 216 25307	75896300	PCB
5322 218 74435	83427801-2	WRITE PROTECT ASM
-		
5322 218 74479	5112 291 39510	FDD BR8A2M
5322 249 14065	77839902	CARRIAGE,ASSY.(HEAD)
5322 255 44243	77833702-2	HARNESS DR.LK
5322 255 44244	75810703-1	DIODE LIGHT HOLDER
5322 256 94135	77830482-4	HOLDER PAD ASSY
-		
5322 268 14102	83435501-8	CONTACTPIN
5322 268 14103	83435511-7	CONTACTPIN
5322 268 34029	83435402-9	CONNECTOR
5322 271 34051	75724402-5	SWITCH,SUBMINIATURE
5322 271 34183	75724401	ACTUATOR SWITCH
-		
5322 281 14057	75747202-2	SOLENOID,CLAPPER
5322 358 24104	75293203-8	BELTMFLAT
5322 361 24121	75747801-1	STEPPERMOTORASSY
5322 395 84058	83401300	OUTER STOP GAUGE
5322 395 84059	83401400	INNER STOP GAUGE
-		
5322 395 84062	SA 120-1	CE-DISKETTE
5322 401 14246	77830308-1	LEAF,ACTUATOR
5322 405 46187	75745800-5	BAIL,ARMATURE
5322 405 46188	75745900-3	EXTENSION,ARMATURE
5322 405 46189	75746800-4	BRACKET.LATCH
-		
5322 405 46191	77603100-7	ARM-HEAD LOAD
5322 405 46192	83461800-1	CLAMP,STEPPERMOTOR
5322 405 46247	75747301	UPPER HARNESS ASM
5322 405 46248	83403502	LOWER HARNESS ASM
5322 405 46295	77834318-6	LEVER-DOOR
-		
5322 414 64085	75292700-4	KNOB,LEVER
5322 414 64097	75292701-2	KNOB-LEVER
5322 417 54011	77835133-8	DOOR LOCK ASSY
5322 447 84675	75812124-8	DOOR,PAINTED.STD.BL
5322 447 84676	83426624-9	PANEL,FRONT(STD.BLK)
-		
5322 447 84782	83461111-3	FRONT PANEL
5322 462 34158	83401700-6	RAIL,DISK,INJECTION
5322 462 34159	83411202-1	BUMPER,DOOR
5322 462 44348	75772500-7	CAPACITOR BOOT
5322 466 85638	75746000-1	LEVER,DOOR
-		
5322 466 94505	77830732-2	FOAM,PAD
5322 492 44191	77830999-7	SPRING,TORSION
5322 492 54271	75292609-7	SPRING,COMPRESSION
5322 492 54272	75292610-5	SPRING,COMPRESSION
5322 492 54273	83401200-7	SPRING,LATCH
-		
5322 492 54274	77594000-0	SPRING CARRIAGE
5322 492 54275	83402200-6	SPRING,CONE
5322 492 54276	83403202-1	BAR,TORSION,DOOR
5322 492 64597	83409701-6	SPRING,GARTER
5322 492 64671	75884657-0	LEAF SPRING
-		
5322 500 14241	93592164-3	SCR HX SELF TAP
5322 502 24555	09000004-3	SCREW BIND HEAD
5322 503 40033	10126214-5	SCREW,HEX.4-40X1/2"
5322 503 40037	09000202-3	SCREW,4-40X3/16"
5322 503 40043	10126218-6	SCREW,HEX.6-32X3/8"

SERVICE CODE NUMBER	IDENTIFICATION CODE NUMBER	DESCRIPTION
5322 503 40046	10126222-8	SCREW.HEX.6-32X5/8"
5322 503 40051	09000504-2	SCREW,8-32X3/12"
5322 503 40068	09000403-7	SCREW,6-32X1/4"
5322 503 44234	09000005-0	SCREW,2-56X3/8"
5322 503 44255	10125001-7	SCREW HX HD
5322 503 44256	10126209-5	SCREW SOC HP CAP
5322 503 44257	10127310-0	SCREW,SLOTTED
5322 503 44258	83413403-3	SCREW,SELF,LOCK
5322 503 44259	83413404-1	SCREW,SELF,LOCK
5322 503 44261	83413406-6	SCREW,SET,HD6-32
5322 503 44262	83413407-4	SCREW,SET,HD4-4
5322 503 44263	83427000-1	SCREW,HEX.HD.
5322 503 44264	93592086-8	SCREW,HEX,WASHER
5322 503 44265	93592162-7	SCREW,HEX,WASHER
5322 503 44266	93592240-1	SCREW,WASHER
5322 503 44327	91976207-0	SCREW
5322 503 44328	93592080-1	SCR HEX WSR HD
5322 503 44329	93592486-0	SCREW
5322 505 14251	83427301-3	NUT CARRIAGE INJ MOC
5322 505 14252	83427900-2	PLATE,NUT
5322 506 44039	77832438-4	NUT,SELFTHD.
5322 506 44041	94217702-3	NUT,SELF,LOCK,8-32
5322 520 24168	92073020-7	BEARING,FLANGED
5322 520 24169	92073022-3	BEARING,FLANGED
5322 520 24171	94217207-3	BEARING BALL
5322 520 34193	75747000-0	BEARING,SPACER
5322 528 94204	83403601-4	SPINDLE
5322 530 74098	92033029-7	RETAININGRING
5322 530 74099	92033037-0	RING,RETAINING
5322 530 74101	92033038-8	RING,RETAINING
5322 530 84089	93529005-6	WASHER,SPRING WAVE
5322 532 14461	10125602-2	WASHER,PLAIN,NO.2
5322 532 14613	94047069-3	WASHER
5322 532 14614	77835201	WASHER NYLON
5322 532 14645	77832395-6	WASHER SPRING WAVE
5322 532 14646	94047068-5	WASHER SPECIAL
5322 532 34104	83402301	LATCH DOOR INJEC MOL
5322 532 54366	75273200-8	BUSHING
5322 532 54367	93529001-5	WASHER,SPRING WAVE
5322 532 54368	93564002-9	WASHER,NYLON
5322 532 54369	94047000-8	WASHER
5322 532 64222	83401500-0	BUSHING,DOOR,MOLDED
5322 532 64269	77830481	CONE-DISK LOAD
5322 532 64271	83426400	EXPANDER-CONE
5322 535 34052	77830998-9	PIN.CARRIAGE
5322 535 74516	75774736-5	CLIP,PUSH-IN(NYLON)
5322 535 94832	75273000-2	PIN,DISKLOADARM
5322 535 94833	75292400-1	GUIDE,CARRIAGE
5322 535 94835	92096099-4	PIN,GROOVED
5322 535 94864	75813300-3	ROD,PUSH
5322 535 94888	83461200-4	LATCH-DOOR
5322 691 64294	83402101-6	CONE,ASSY
5322 691 64307	75791508	ACTUATOR ASSY
5322 691 64315	5111 010 03911	FDD BR8A5B DOORLOCK

9.1 INTRODUCTION

The following paragraphs contain the wire lists for the Upper Harness Assembly, Lower Harness Assembly and the Stepper Motor.

9.2 UPPER HARNESS ASSEMBLIES

Wire Color	Origin	Destination	Approximate Length Inches
Red	Solenoid-A	J5-5	11.0" (279.4mm)
Black	Solenoid-B	J5-2	11.0" (279.4mm)
Orange	Interlock Common	J5-6	13.5" (342.9mm)
White	Interlock N.O.	J5-4	13.5" (342.9mm)
Blue	LED Cathode	J5-1	13.5" (342.9mm)
Yellow	LED Anode	J5-3	13.5" (342.9mm)

9.3 LOWER HARNESS ASSEMBLY

Wire Color	Origin	Destination	Approximate Length Inches
Black	Track 0 Common	J3-5	20.0" (508.0mm)
Red	Track 0 N.C.	J3-3	20.0" (508.0mm)
White	Track 0 N.O.	J3-2	20.0" (508.0mm)
Blue	Photo Transistor Emitter	J3-4	9.0" (228.6mm)
Yellow	Photo Transistor Collector	J3-1	9.0" (228.6mm)

9.4 STEPPER MOTOR

Wire Color	Origin	Destination	Approximate Length Inches
Brown	Stepper Motor	J4-1	13.0" (330.2mm)
Red	Stepper Motor	J4-2	13.0" (330.2mm)
Orange	Stepper Motor	J4-3	13.0" (330.2mm)
Black	Stepper Motor	J4-4	13.0" (330.2mm)

9.5 WRITE PROTECT

Wire Color	Origin	Destination	Approximate Length Inches
Blue	LED Cathode	J6-1	20.0" (508.0mm)
Red	Phototransistor Collector	J6-2	20.0" (508.0mm)
Green	LED Anode	J6-3	20.0" (508.0mm)
White	Phototransistor Emitter	J6-4	20.0" (508.0mm)