P854
P858
P859

TEST PROGRAM FOR CPU P854, P858, P859

TEST OF INSTRUCTION SET

CP57RE

Procedure 12NC: 5111 991 10353

Concerned PV:

PV250-145 (tape)
PV350-145 (cassette)
PV450-145 (floppy)

CP57RE includes

Procedure
+Listing 12NC: 5111 991 10343
+Program 12NC: 5111 199 65003

0. TABLE OF CONTENTS

1. GENERAL

2. MINIMUM CONFIGURATION REQUIRED

3. LOADING PROCEDURE

4. PROGRAM RUNNING
   - 4.1 Program execution
   - 4.2 Error indication
   - 4.3 Interference interrupt
   - 4.4 Power failure
   - 4.5 Erroneously trapped instruction
   - 4.6 Number of program executions

5. TEST CONFIGURATION

6. FLOW CHARTS
   - 6.1 Multiply and divide organization
   - 6.2 Division - Definition of the used symbols
   - 6.3 Trapped instruction test program

7. HALT IN MULTIPLICATION AND DIVISION
   - 7.1 Complete multiplication test
   - 7.2 Complete division test

CPU Test Program (name: CP57RE).
Test of instruction set.

1. GENERAL

- Test program for CPU P854, P858, P859.
- The test program tests all CPU instructions except:
  - Instructions modifying the contents of A0
  - ABK in T8 format
  - LKM, ENB, INH and RIT
  - All input instructions.
- Except RTC and PWF any interruption occuring during program execution stops the program.
- The program is protected against power failure.

2. MINIMUM CONFIGURATION REQUIRED

- P854: double board CPU.
- P858, P859: CPU board.
- An input peripheral to load the program (tape, cassette, floppy or disc resident test).
- A minimum memory module of 16KW is required.

3. LOADING PROCEDURE

The program supporting medium is preceded by an I.P.L. loader ensuring the print out of the program name and program loading.

P.T.R. Loading

- Load /1020 on console keys (Reader address bits 10 through 15, bit 03 = programmed channel loading.
- Depress "MC"
- Place tape onto reader, push down the tape load lever, switch the reader to "ON".
- Depress IPL.

Cassette Loading

- Place Cassette in drive, on program record face
- Wait for end of rewind
- Depress MC
- Set Control Panel Keys
  - On programmed channel
    /1785 if cassette address 5
    /1795 if cassette address 15
    /17A5 if cassette address 25

  - On multiplex channel
    /0785 if cassette address 5
    /0795 if cassette address 15
    /07A5 if cassette address 25

- Depress IPL

Floppy Loading

- See sticker on diskette envelope

After Loading program stops in /300 (hexa)

4. PROGRAM RUNNING

4.1 Program execution

- After loading the program (stop at /300).
- Depress MC button.
- Depress the RUN button.

- The program will then continue till the operator stops it.

- It can be stopped at any time by depressing INST button and restarted at /300.

4.2 Error indication

When an error occurs in the execution of an instruction, the program stops on a "HALT" located immediately after the faulty instruction.
In a few cases, when the CPU is in user mode, the Halt is replaced by a RB *.

4.3 Interference interrupt

Any interrupt received during the RUN causes a Halt on address /24A.

4.4 Power failure

In the case of a power failure, program saving is provided.

4.5 Erroneously trapped instruction

Any erroneously trapped instruction (7E or 7C) causes a Halt at address /248.

4.6 Number of program executions

The memory address 024A gives the number of RUN execution.
A complete execution takes only a few seconds.

5. TEST CONFIGURATION

The test program is split up in 2 main parts:

1. Instruction set of P854/8/9
2. Test of the trapped instruction.

The program is designed to start from very simple instructions which are then used to check the other instructions.

The program is mainly written according to the operation code (OPC), that means the test starts with test of OPC = 0 and finishes with OPC = 15, then the D set format.

Generally the test program has been written in a linear mode in order to enable facilities for use during debug. There are some exceptions like test of:

- multiplication
- division
- test trapped instructions.

For these exceptions the following flowcharts help the debugger.

It is impossible to give in this procedure the meaning of each Halt. If the user wishes to have the details of the sequence giving this Halt, the listing is mandatory.

For the simple sequence it is easy to find out:

- the instruction having caused this Halt
- its addressing mode
- whether it is a CR test after a sequence of the instruction with known data
- whether it is an error in the final computed result.

6. FLOW CHARTS

6.1 Multiply and divide organization

6.1.1 Operand Definition

An operand is defined by its type and its parameter x.

Type A = (-1)

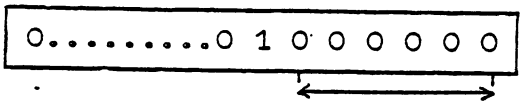

limits : x = 0 x = 14 <=> /0001 through /4000
value 2^x

Type B = (0)

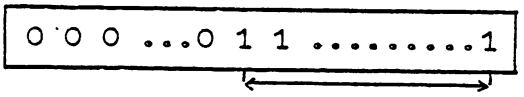

limits : x = 0 x = 14 <=> /0001 through /7FFF
value $2^{x+1}-1$

Type C = (+1)

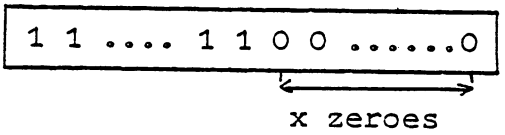

limits : x = 0 x = 15 <=> /FFFF through /8000
value -2^x

6.1.2 Definitions of the Terms Used

DIVFLA = Flag division if equal to 1, multiplication if equal to zero

TYAND = Multiplicand or dividend type
TYEUR = Type of Multiplier or divisor
} Type A = -1, B = 0, C = +1

X AND = Parameter X of multiplicand or of dividend

X EUR = Parameter X of multiplier or of divisor

AND = Multiplicand or dividend } on two memory words

EUR = Multiplier or divisor

TYØPER = Operand type
XØPER = Operand parameter X
DOUBLE = Double length flag if equal to 1
} Inputs of NEWØP

ØPER = Newly calculated operand (2 memory words)

END = 0 : Newly found operand
1 : It is impossible to compute operand
Change type

SIRES = Simulated result

SIØVF = Simulated overflow

EXRES = Number of shifts executed to obtain the simulated result.

RES = Real result

ØVF = Real overflow

6.1.3 General Organization of Multiplication or Division Tests

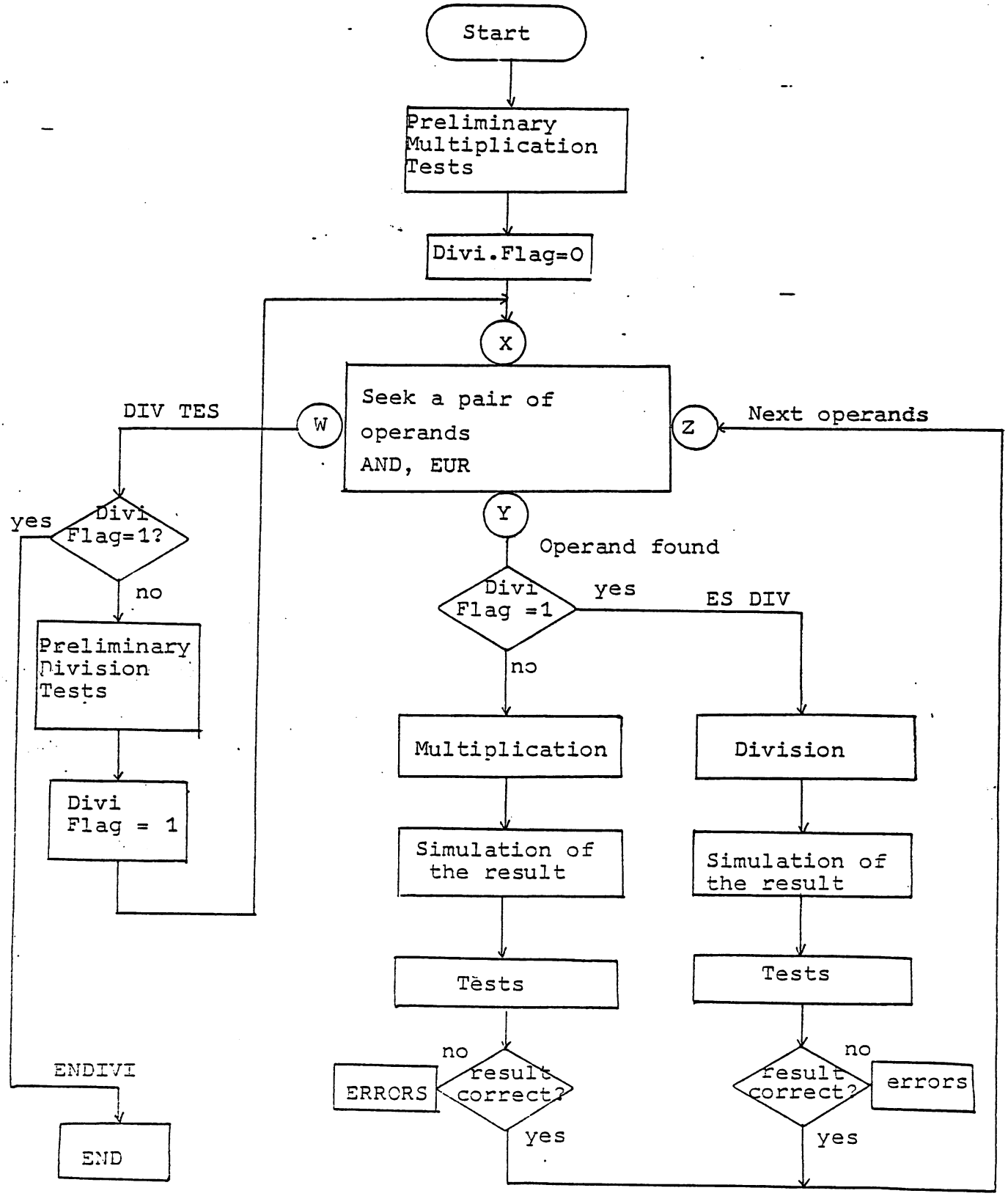

6.1.4 General Organization of Multiplication and Division

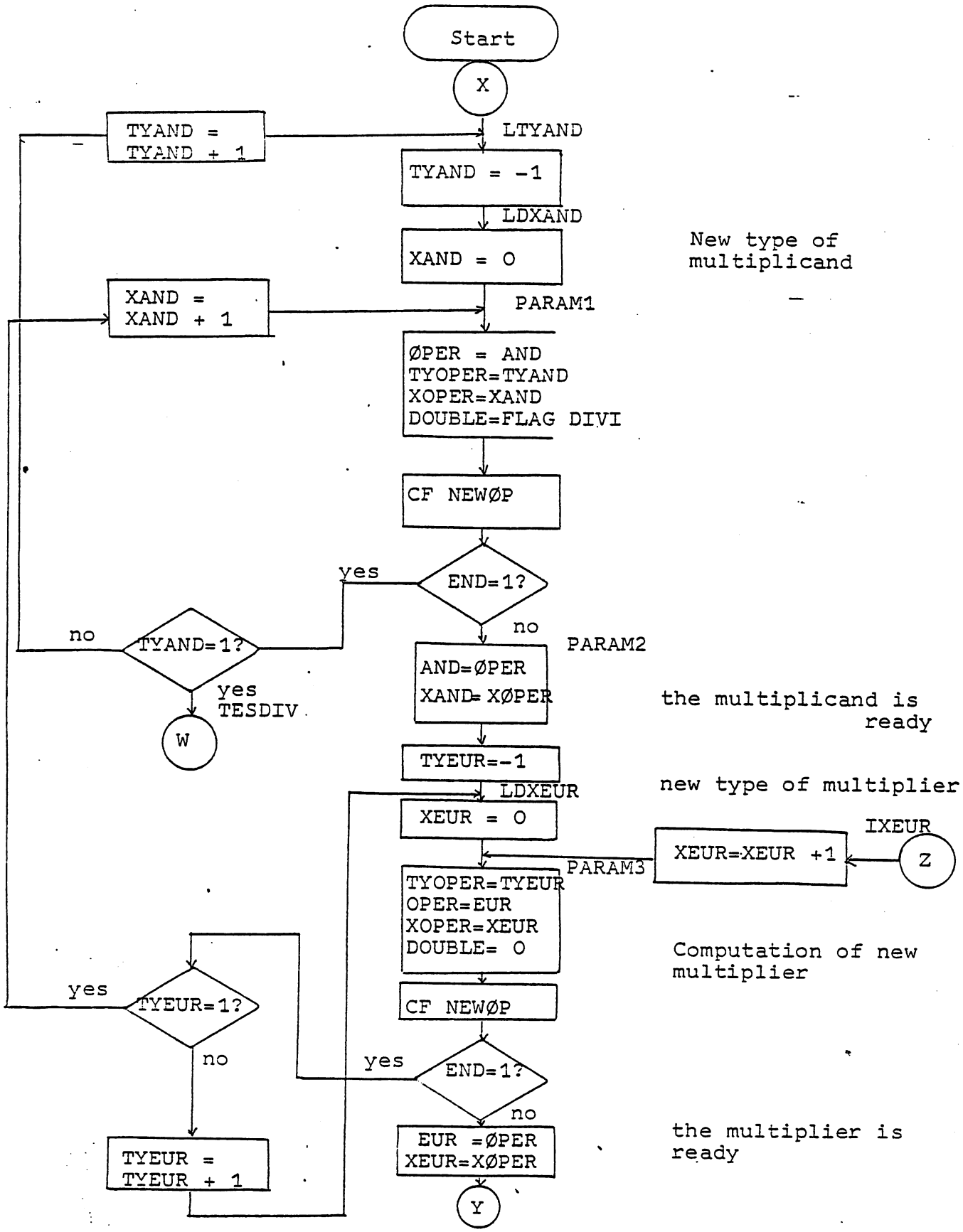

6.1.5 Computation of the New Operand in Double or Simple Length

Double Flag = 0

Operand
0

M

M + 2

Double Flag = 1

Operand	Most significant bits
Operand	Least significant bits

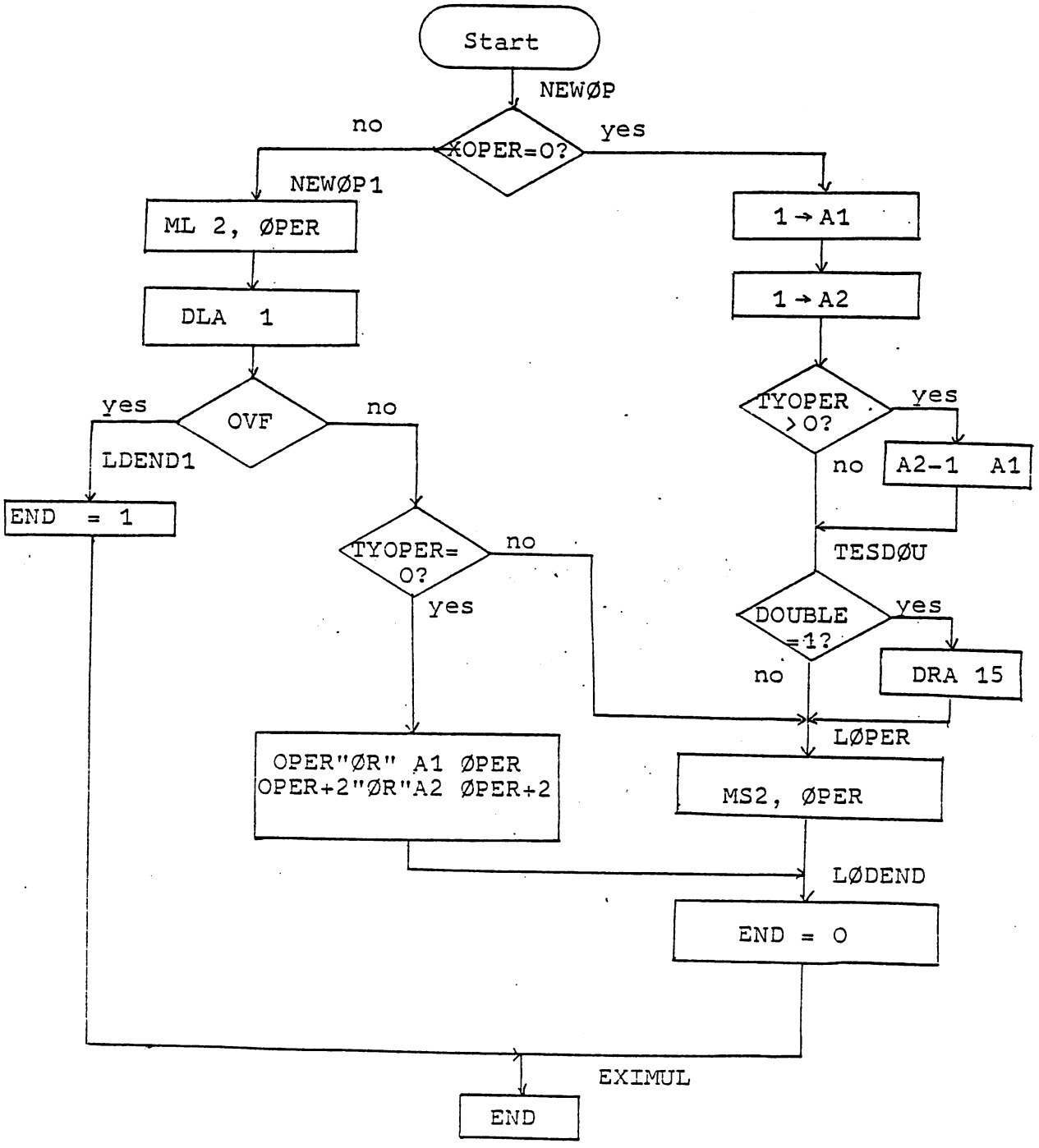

6.1.6 Case of Computations Processed as a Multiplication or a Division

Multiplicand	Multiplier	Computation Case N° :
- "1" among zeroes	-"1" among zeroes	1
	-"1" shifted left filled with 1s on the right side	2
	-"1" shifted right filled with 1s on the left side	3
- "1" shifted left filled with 1s on the right side	-"1" among zeroes	4
	-"1" shifted left filled with 1s on the right side	5
	-"1" shifted right filled with 1s on the left side	6
- "1" shifted right filled with 1s on the left	-"1" among zeroes	7
	-"1" shifted left filled with 1s on the right side	8
	-"1" shifted right filled with 1s on the left side	9
Dividend	Divisor	

6.1.7 Simulated Computation of the Multiplication Result

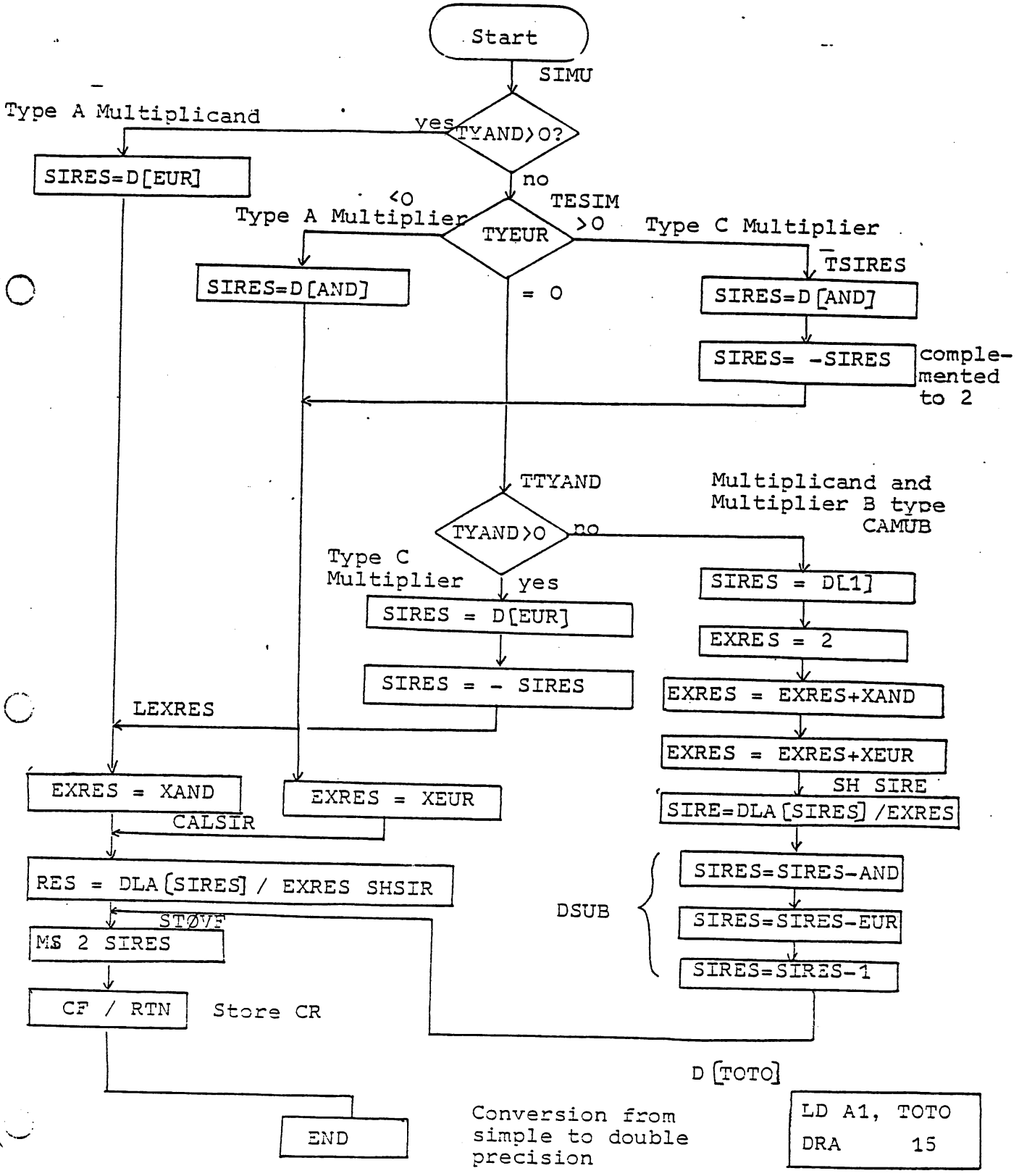

6.1.8 Test of the Multiplication Result

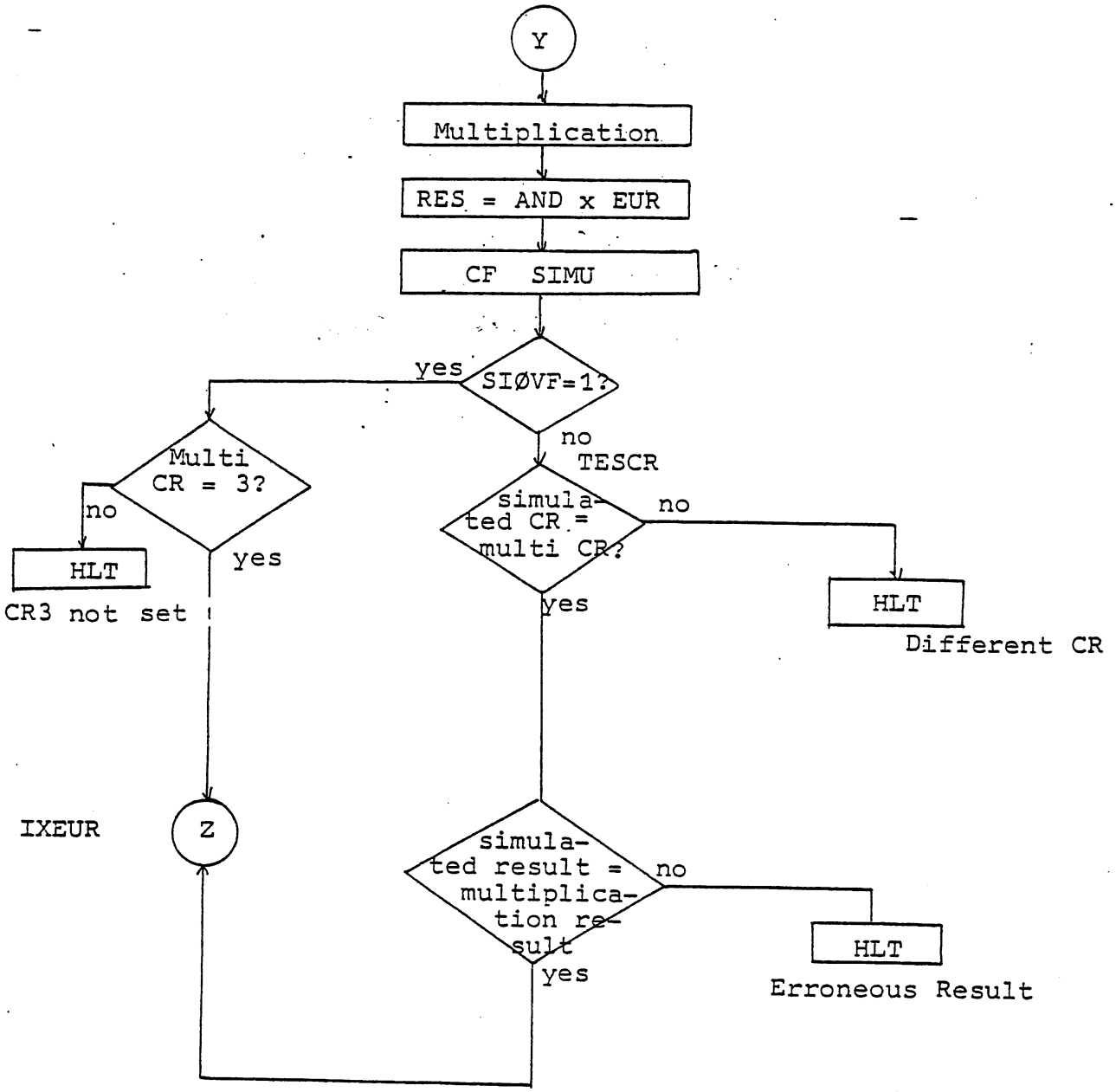

6.2 Division - Definition of the used Symbols

A = Dividend (double precision)
B = Divisor (simple precision)
Q = Quotient
R = Remainder

- Quotient and remainder must satisfy the three following conditions :
  1. $A = B \times Q + R$
  2. $|R| < |B|$
  3. A sign = R sign (except when R = 0)

- Overflow is detected by the machine for the following causes :
  a. Division by zero
  b. Quotient too great.

6.2.1 Computation of Overflow in Division

If "PFA" represents the most significant bits of A (dividend) the algorithm used in the machine detects the overflow in the following way :

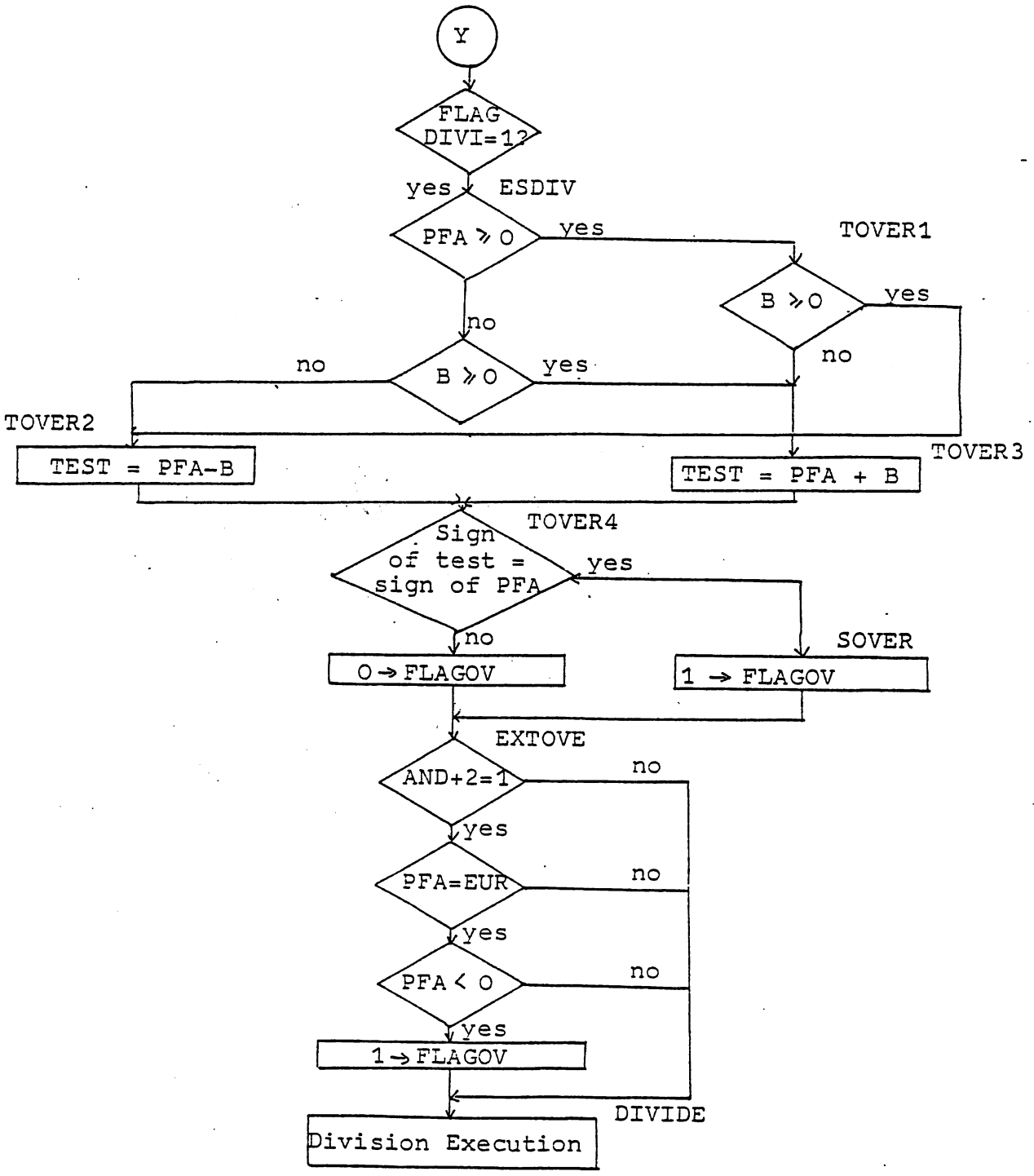

6.2.2 Checking the Division Result

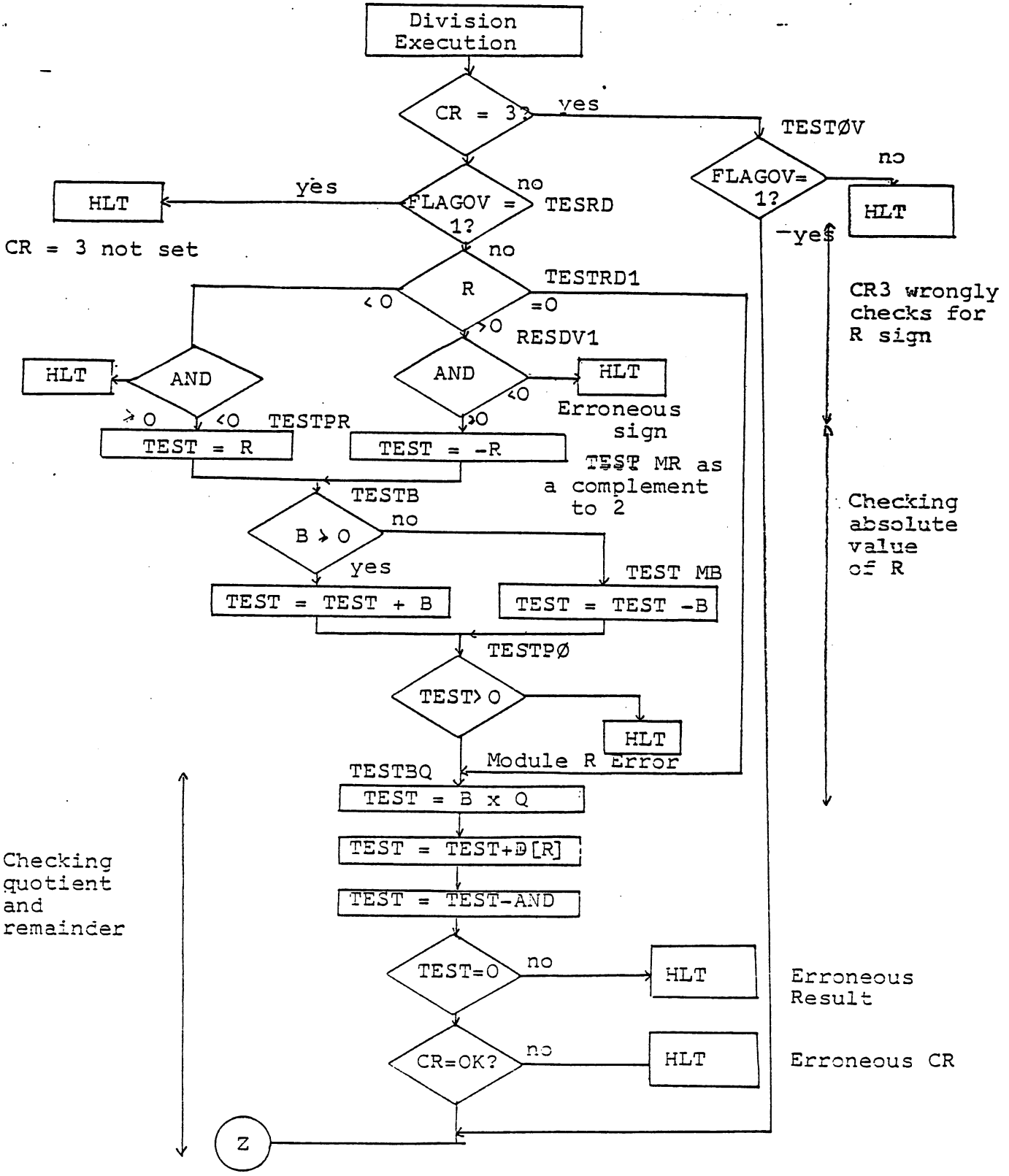

6.3 Trapped instruction test program

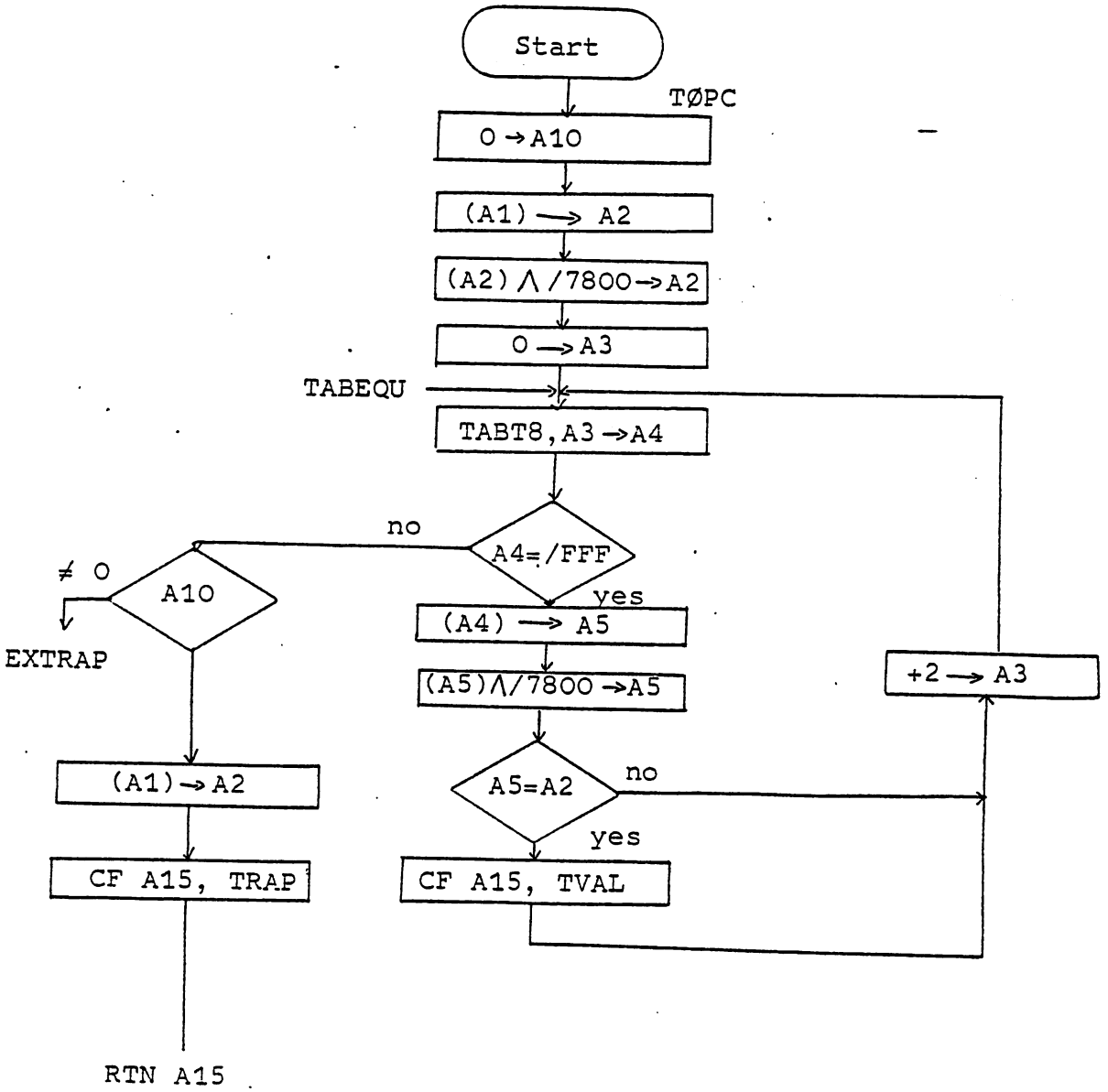

6.3.1

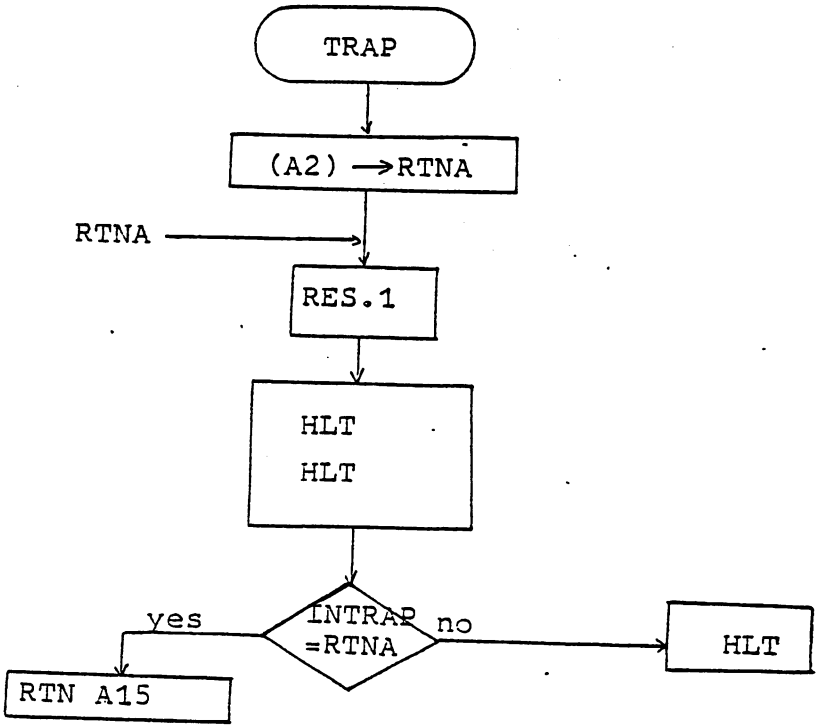

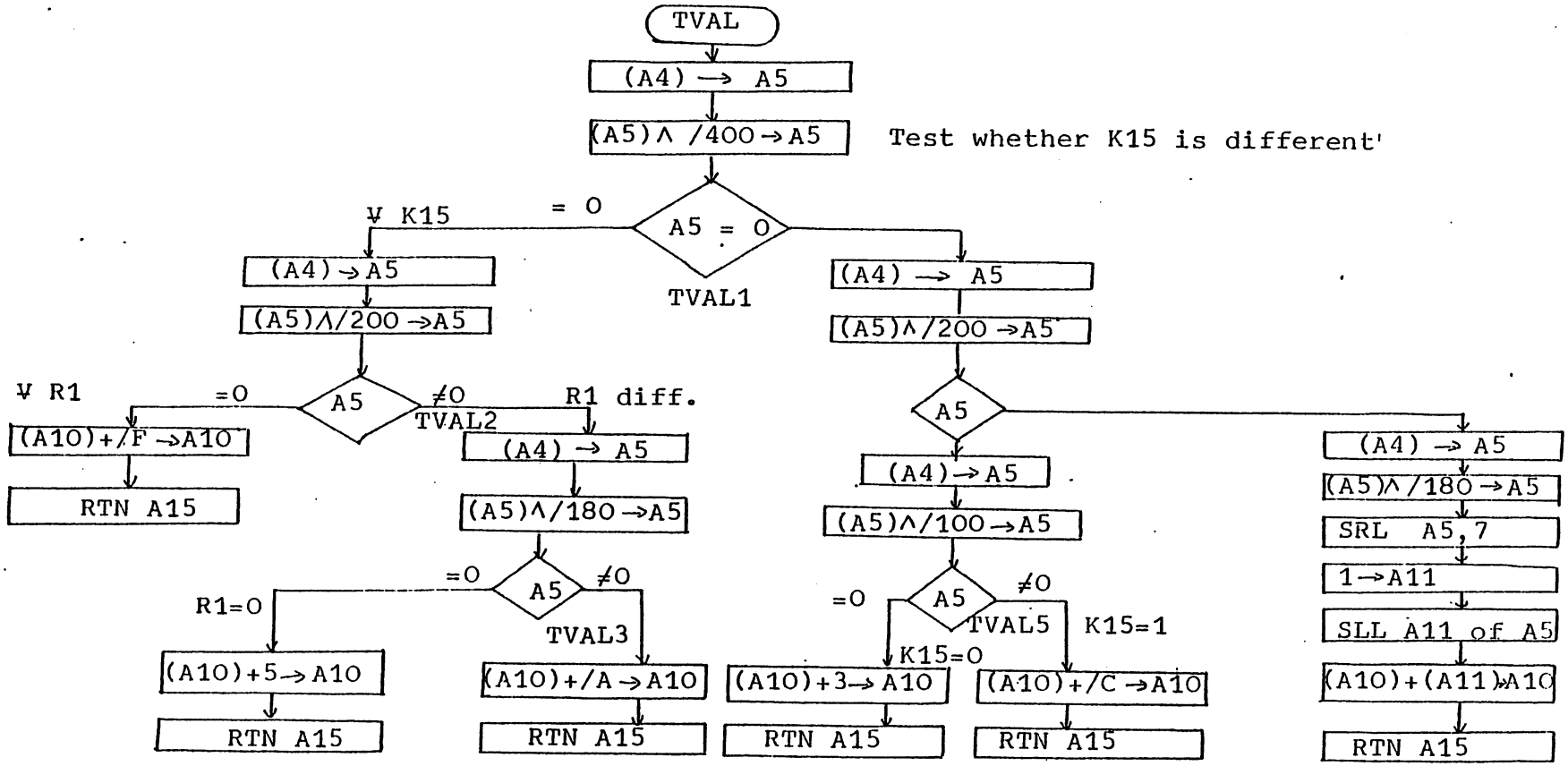

Value of A10

	12	13	14	15
	K15=1 R1≠0	K15=1 R1=0	K15=0 R1≠0	K15=0 R1=0

A zero indicates the empty boxes, i.e. the cases to be executed.

6.3.3

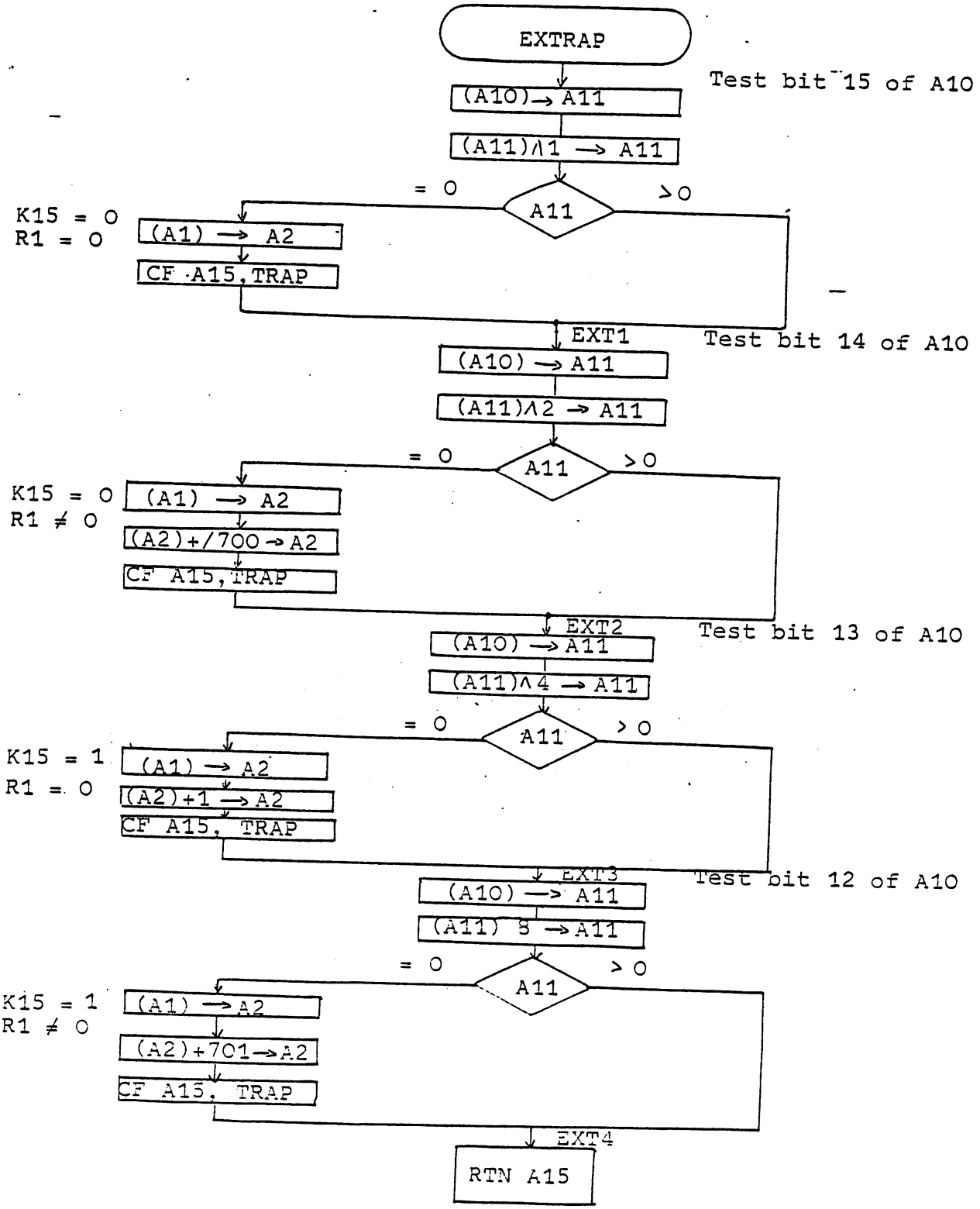
EXTRAP
(A10) → A11
(A11)∧1 → A11
A11
= 0
> 0
K15 = 0
R1 = 0
(A1) → A2
CF A15, TRAP
Test bit 15 of A10
EXT1
(A10) → A11
(A11)∧2 → A11
A11
= 0
> 0
K15 = 0
R1 ≠ 0
(A1) → A2
(A2)+/700 → A2
CF A15, TRAP
Test bit 14 of A10
EXT2
(A10) → A11
(A11)∧4 → A11
A11
= 0
> 0
K15 = 1
R1 = 0
(A1) → A2
(A2)+1 → A2
CF A15, TRAP
Test bit 13 of A10
EXT3
(A10) → A11
(A11) 8 → A11
A11
= 0
> 0
K15 = 1
R1 ≠ 0
(A1) → A2
(A2)+701 → A2
CF A15, TRAP
Test bit 12 of A10
EXT4
RTN A15

7. HALT IN MULTIPLICATION AND DIVISION

7.1 Complete multiplication test

Address	Meaning
/3472	-CR erroneously set to 3 by the multiplication
/3478	-CR set to a value different from that computed by simulation
/3484	-The multiplication result is different from that computed by the simulation.

For all these HALTs the contents of memories : AND and EUR give the parameters of the multiplication.

The contents of memories RES and SIRES respectively give :
RES = Real Result of Multiplication
SIRES = Result computed by simulation.

7.2 Complete division test

Address	Meaning
/370C	- The CR has erroneously been set to 3 by the division.
/3714	- The division has not set the CR to 3.
/3724	- Wrong quotient sign.
/3730	- Wrong quotient sign.
/3746	- The remainder of the division is greater than the divisor.
/375C	- The result of the division: quotient or remainder is erroneous.
/3780	- The value of the CR set by the division does not correspond to that computed by simulation.

For these halts:

EUR = Divider
AND = Dividend
A2 Register = Quotient
A1 Register = Remainder

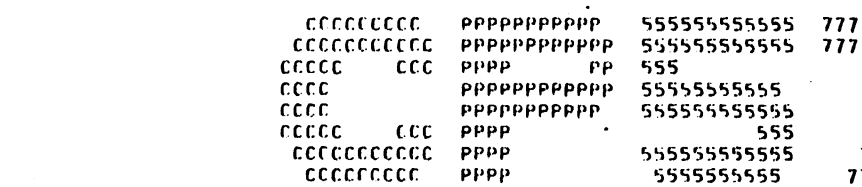
CCCCCCCCC PPPPPPPPPPP 555555555555 777777777777 RRRRRRRRRRR EEEEEEEEEEEE
CCCCCCCCCCC PPPPPPPPPPPP 555555555555 777777777777 RRRRRRRRRRRR EEEEEEEEEEEE
CCCCC CCC PPPP PP 555 7777 RRRR RRR EEEE
CCCC PPPPPPPPPPPP 555555555555 7777 RRRRRRRRRRRR EEEEEEEEE
CCCC PPPPPPPPPPP 555555555555 7777 RRRRRRRRRRR EEEEEEEEE
CCCCC CCC PPPP 555 7777 RRRR RRRR EEEE
CCCCCCCCCCC PPPP 555555555555 7777 RRRR RRRR EEEEEEEEEEEE
CCCCCCCCC PPPP 5555555555 7777 RRRR RRRR EEEEEEEEEEEE

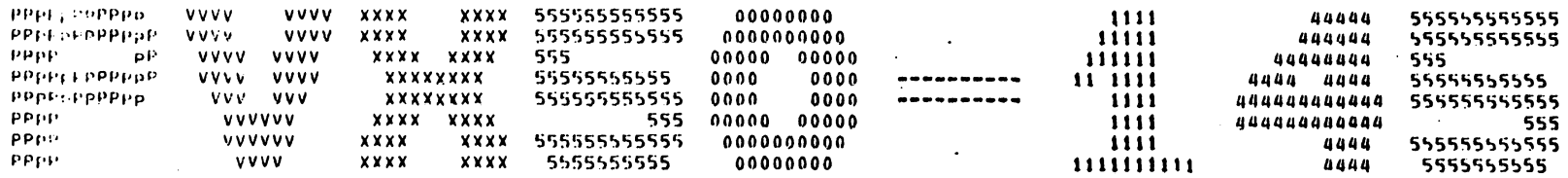
VVVV VVVV XXXX XXXX 555555555555 00000000 1111 44444 555555555555
VVVV VVVV XXXX XXXX 555555555555 00000000 11111 444444 555555555555
VVVV VVVV XXXX XXXX 555 00000 00000 111111 44444444 555
VVVV VVVV XXXXXXXX 55555555555 0000 0000 11 1111 4444 4444 55555555555
VVV VVV XXXXXXXX 555555555555 0000 0000 1111 444444444444 555555555555
VVVVVV XXXX XXXX 555 00000 00000 1111 444444444444 555
VVVVVV XXXX XXXX 555555555555 0000000000 1111 4444 555555555555
VVVV XXXX XXXX 5555555555 00000000 1111111111 4444 5555555555

```
00000                    IDENT    CP57RE              5111 991 60981                    ASM 58
00001                *
00002                *
00003                *
00004                *
00005                ************************************************
00006                *
00007                *
00008                *
00009                *           CPU TEST PROGRAM FOR P854 P858/9
00010                *
00011                *
00012                *
00013                *
00014                ************************************************
00015                *
00016                *
00017                *
00018                *
00019                *       APPLICABLE TO : PVX50-145   DATE : 80 11 06
00020                *
00021                *
00022                *       PROCEDURE     5111 991 10351
00023                *
00024                *       LISTING       5111 991 10341
00025                *
00026                *       PROGRAM       5111 199 65001
00027                *
00028                *
00029                *
00030                *
00031                *
```

```
00032                          EJECT
00033      0000      DEB       EQU       *
00034                *
00035                *
00036      007E      WTRAP     EQU       /7E
00037      007C      WTRAPD    EQU       /7C
00038                *
00039                *
00040      0007      NUREC     EQU       7
00041                *
00042                *
```

```
00043                          EJECT
00044                          RORG    DEB+/80
00045                  *
00046          0080    BIPL    EQU     *
00047                  *
00048                  *
00049                  *               THIS IPL IS USED TO LOAD BINARY TAPE
00050                  *
00051                  *
00052  0080  FFFF      LDFLG   DATA    /FFFF                   LDFLG = -1 IF JUST LOADED
00053  0082  0000              DATA    0                       NOT USED
00054          0084    IPL     EQU     *
00055                  *               ADDR OF IPL = BASE ADDR
00056  0084  82A0              LDKL    A10,/84
       0086  0084
00057                  *               CHECK IF JUST LOADED OR NOT
00058  0088  904B              IM      LDFLG-IPL,A10
       008A  FFFC
00059  008C  510A              RF(1)   IPL100                  NO NOT FIRST TIME
00060                  *
00061                  *               LOAD A11 WHITH STARTING ADDRESS
00062                  *               LOAD A12 WHITH LOADING ADDRESS
00063  008E  83A0              LDKL    A11,/2E0
       0090  02E0
00064  0092  84A0              LDKL    A12,/D0
       0094  00D0
00065
00066  0096  5704              RF      IPL110
00067                  *
00068                  *
00069          0098    IPL100  EQU     *
00070  0098  94A0              ADKL    A12,80
       009A  0050
00071                  * LOAD ADDRESS OF NEXT RECORD
00072          009C    IPL110  EQU     *
00073  009C  671E              LDR     A7,A15
00074                  * RESTORE CIO INST IN BOOT
```

```
00075 009E 273F          ANK     A7,/3F
00076 00A0 9720          ADKL    A7,/41C0          CIO INSTRUCTION
      00A2 41C0
00077 00A4 872D          STR     A7,A3
00078 00A6 0557          LDK     A5,/57            CHANGE LOC /5A OF BOOT IN ORDER TO
00079 00A8 E541          SC      A5,/5A            CANCEL LEADING CHARACTER FLAG
      00AA 005A
00080                *           RE INITIALIZE A5,A6
00081 00AC 0550          LDK     A5,80
00082                * # OF CHARACTERS
00083 00AF 8612          LDR     A6,A12            LOAD ADDRESS
00084                *           CHECK             IF                    COUNT bo
00085 00B0 904B          IM      CNTFLG-IPL,A10
      00B2 0034
00086 00B4 890E          ABR(1)  A11
00087 00B6 0F42          AB      /42               START BOOT AGAIN
00088      00B8  CNTFLG  EQU     *                 NUMBER OF RECORDS OF THE BINARY TEST PRO
00089 00B8 FF2A          DATA    1-NBREC
00090                *
00091                *
00092      0180  STACK   EQU     /180
00093                *
00094                *
00095
```

```
00096                    EJECT
00097                *****************************************************
00098                *                                                   *
00099                *                  ELEMENTARY  TESTS                *
00100                *                  *****************                *
00101                *                                                   *
00102                *  THESE ELEMENTARY TESTS ARE USED TO CONTROL IF    *
00103                *  SOME INSTRUCTIONS ARE RUNNING WELL,THIS WILL     *
00104                *  PERMIT THE CPU TEST ITSELF TO BE STARTED,        *
00105                *                                                   *
00106                *                                                   *
00107                *****************************************************
00108                *
00109                *
00110                *****************************************************
00111                *                                                   *
00112                *        RESERVED LOCATIONS , TABLES AND DATA       *
00113                *                                                   *
00114                *****************************************************
00115                *
00116                         RORG     DEB+/200
00117                *
00118  0200  0000    ZERO     DATA     0
00119  0202  FFFF    ONES     DATA     X'FFFF'
00120  0204  7FFF    MAXPOS   DATA     X'7FFF'
00121  0206  0001    ONE      DATA     X'0001'
00122  0208  0002             DATA     X'0002'
00123  020A  0004             DATA     X'0004'
00124  020C  0008             DATA     X'0008'
00125  020E  0010             DATA     X'0010'
00126  0210  0020             DATA     X'0020'
00127  0212  0040             DATA     X'0040'
00128  0214  0080             DATA     X'0080'
00129  0216  0100             DATA     X'0100'
00130  0218  0200             DATA     X'0200'
00131  021A  0400             DATA     X'0400'
00132  021C  0800             DATA     X'0800'
```

```
00133  021E  1000          DATA    X'1000'
00134  0220  2000          DATA    X'2000'
00135  0222  4000          DATA    X'4000'
00136  0224  8000          DATA    X'8000'
00137  0226  0001    DONE  DATA    X'0001'
00138  0228  0002          DATA    X'0002'
00139  022A  0004          DATA    X'0004'
00140  022C  0008          DATA    X'0008'
00141  022E  0010          DATA    X'0010'
00142  0230  0020          DATA    X'0020'
00143  0232  0040          DATA    X'0040'
00144  0234  0080          DATA    X'0080'
00145  0236  0100          DATA    X'0100'
00146  0238  0200          DATA    X'0200'
00147  023A  0400          DATA    X'0400'
00148  023C  0800          DATA    X'0800'
00149  023E  1000          DATA    X'1000'
00150  0240  2000          DATA    X'2000'
00151  0242  4000          DATA    X'4000'
00152  0244  8000          DATA    X'8000'
00153                      *
00154                      *
00155  0246  207F  HLTRAP  HLT                     UNEXPECTED TRAPPE
00156                      *
00157                      *
00158                      *
00159                      *
00160  0248  207F  HLTINT  HLT                     UNEXPECTED INTERRUPT
00161                      *
00162                      *
00163  024A  0000  CALRUN  DATA    0               RUN NUMBER.
00164                      *
00165                      *
00166
```

```
00167                                  EJECT
00168                                  RORG    DEB+/2E0
00169          02F0          START1    EQU     *
00170  02E0    0100                    LDK     A1,0
00171  02E2    8141                    ST      A1,CALRUN          0 IN NUMBER RUN.
       02E4    024A  R
00172  02E6    8120                    LDKL    A1,HLTINT          LOAD ADDRESS UNEXPECTED INTERRUPT
       02E8    0248  R
00173  02EA    0200                    LDK     A2,0               MEMORY LOCATION 0 TO /7C
00174  02EC    8129          START2    STR     A1,A2
00175  02EE    1202                    ADK     A2,2
00176  02F0    EA20                    CWK     A2,/7E
       02F2    007E
00177  02F4    5C0A                    RB(4)   START2
00178  02F6    5706                    RF      START-2
00179                                  RORG    DEB+/2FE
00180  02FE    207F                    HLT
00181          0300          START     EQU     *
00182  0300    20BF                    INH
00183  0302    8120                    LDKL    A1,HLTRAP
       0304    0246  R
00184  0306    8141                    ST      A1,WTRAP
       0308    007E
```

```
00185                          EJECT
00186                  ********************************************************
00187                  *                                                      *
00188                  *        RF RELATIVE FORWARD BRANCH,                   *
00189                  *                                                      *
00190                  *        TEST WITH A NUL VALUE - CR = 0,               *
00191                  *                                                      *
00192                  ********************************************************
00193          030A    TESRF   EQU     *
00194  030A    8140            LD      A1,ZERO             CR = 0
       030C    0200  R
00195  030E    5502            RF(5)   *+4                 CR # 1  JUMP
00196  0310    207F            HLT
00197  0312    5602            RF(6)   *+4                 CR # 2  JUMP
00198  0314    207F            HLT
00199  0316    5002            RF(0)   *+4                 CR = 0  JUMP
00200  0318    207F            HLT
00201  031A    5404            RF(4)   *+6                 CR # 0  DO NOT JUMP
00202  031C    5102            RF(1)   *+4                 CR = 1  DO NOT JUMP
00203  031E    5702            RF(7)   *+4                 JUMP
00204  0320    207F            HLT
00205  0322    5202            RF(2)   *+4                 CR = 2  DO NOT JUMP
00206  0324    5702            RF(7)   *+4                 JUMP
00207  0326    207F            HLT
00208  0328    5302            RF(3)   *+4                 CR = 3  DO NOT JUMP
00209  032A    5702            RF(7)   *+4                 JUMP
00210  032C    207F            HLT
```

```
00211                          EJECT
00212                    *
00213                    ************************************************
00214                    *                                              *
00215                    *       TEST WITH POSITIVE VALUE  CR = 1       *
00216                    *                                              *
00217                    ************************************************
00218                    *
00219  0328  8140        R          LD       A1,ONE              CR = 1
       032A  0206
00220  032C  5402                   RF(4)    *+4                 CR # 0  JUMP
00221  032E  207F                   HLT
00222  0330  5602                   RF(6)    *+4                 CR # 2  JUMP
00223  0332  207F                   HLT
00224  0334  5102                   RF(1)    *+4                 CR = 1  JUMP
00225  0336  207F                   HLT
00226  0338  5002                   RF(0)    *+4                 CR = 0  DO NOT JUMP
00227  033A  5702                   RF(7)    *+4                 JUMP
00228  033C  207F                   HLT
00229  033E  5202                   RF(2)    *+4                 CR = 2  DO NOT JUMP
00230  0340  5702                   RF(7)    *+4                 JUMP
00231  0342  207F                   HLT
00232  0344  5502                   RF(5)    *+4                 CR # 1  DO NOT JUMP
00233  0346  5702                   RF(7)    *+4                 JUMP
00234  0348  207F                   HLT
00235  034A  5302                   RF(3)    *+4                 CR = 3  DO NOT JUMP
00236  034C  5702                   RF(7)    *+4                 JUMP
00237  034E  207F                   HLT
00238                    *
00239  0350  8140        R          LD       A1,ONE              CR=1
       0352  0206
00240  0354  5702                   RF       *+4
00241  0356  207F                   HLT
00242  0358  5702                   RF       *+4
00243  035A  207F                   HLT
00244  035C  5704                   RF       *+6
00245  035E  5702                   RF(7)    *+4
```

```
00246  0366  207F              HLT
00247                    *
00248                    ******************************************************
00249                    *                                                    *
00250                    *        TEST WITH NEGATIVE VALUE  CR = 2            *
00251                    *                                                    *
00252                    ******************************************************
00253                    *
00254  0368  8140              LD       A1,ONES                 CR = 2
       036A  0202  R
00255  036C  5402              RF(4)    *+4                     CR # 0  JUMP
00256  036E  207F              HLT
00257  0370  5502              RF(5)    *+4                     CR # 1  JUMP
00258  0372  207F              HLT
00259  0374  5202              RF(2)    *+4                     CR = 2  JUMP
00260  0376  207F              HLT
00261  0378  5002              RF(0)    *+4                     CR = 0  DO NOT JUMP
00262  037A  5702              RF(7)    *+4                     JUMP
00263  037C  207F              HLT
00264  037E  5102              RF(1)    *+4                     CR = 1  DO NOT JUMP
00265  0380  5702              RF(7)    *+4                     JUMP
00266  0382  207F              HLT
00267  0384  5602              RF(6)    *+4                     CR # 2  DO NOT JUMP
00268  0386  5702              RF(7)    *+4                     JUMP
00269  0388  207F              HLT
00270  038A  5302              RF(3)    *+4                     CR = 3  DO NOT JUMP
00271  038C  5702              RF(7)    *+4                     JUMP
00272  038E  207F              HLT
00273                    *
00274                    ******************************************************
00275                    *                                                    *
00276                    *                TEST OFERFLOW  CR = 3               *
00277                    *                                                    *
00278                    ******************************************************
01279                    *
00280  0390  8140              LD       A1,MAXPOS
       0392  0204  R
```

```
00281  0394  9140      AD      A1,ONE          CR = 3
       0396  0206  R
00282  0398  5302      RF(3)   *+4             CR = 3  JUMP
00283  039A  207F      HLT
00284  039C  5402      RF(4)   *+4             CR # 0  JUMP
00285  039E  207F      HLT
00286  03A0  5502      RF(5)   *+4             CR # 1  JUMP
00287  03A2  207F      HLT
00288  03A4  5602      RF(6)   *+4             CR # 2  JUMP
00289  03A6  207F      HLT
00290  03A8  5002      RF(0)   *+4             CR = 0  DO NOT JUMP
00291  03AA  5702      RF(7)   *+4             JUMP
00292  03AC  207F      HLT
00293  03AE  5102      RF(1)   *+4             CR = 1  DO NOT JUMP
00294  03B0  5702      RF(7)   *+4             JUMP
00295  03B2  207F      HLT
00296  03B4  5202      RF(2)   *+4             CR = 2  DO NOT JUMP
00297  03B6  5702      RF(7)   *+4             JUMP
00298  03B8  207F      HLT
00299                *
00300                ********************************************************
00301                *                                                      *
00302                *       RB RELATIVE BACKWARD CONDITIONNAL BRANCH       *
00303                *                                                      *
00304                ********************************************************
00305                *
00306       03BA     TESRBV  EQU     *
00307  03BA  5008      RF(0)   TESRBN          CR=0 JUMP,CR#0 DO NOT JUMP
00308  03BC  8140      LD      A1,ZERO         CR=0
       03BE  0200  R
00309  03C0  5808      RB(0)   TESRBV          JUMP
00310  03C2  207F      HLT
00311       03C4     TESRBN  EQU     *
00312  03C4  5904      RB(1)   *-2             DO NOT JUMP
```

```
00313                       EJECT
00314                  ****************************************************
00315                  *                                                  *
00316                  *        TEST PARTIAL DATA PATH USING C,R, AS      *
00317                  *                    CONTROL.                      *
00318                  *                                                  *
00319                  ****************************************************
00320                  *
00321  03C6  8140            LD        A1,ONE                BIT 15,CR=1
       03C8  0206  R
00322  03CA  5102            RF(1)     *+4                   CR=1,JUMP
00323  03CC  207F            HLT
00324  03CE  8140            LD        A1,ZERO               A1=0,CR=0
       03D0  0200  R
00325  03D2  5002            RF(0)     *+4
00326  03D4  207F            HLT
00327  03D6  8140            LD        A1,ONE+2              BIT 14,CR=1
       03D8  0208  R
00328  03DA  5102            RF(1)     *+4
00329  03DC  207F            HLT
00330  03DE  8140            LD        A1,ZERO
       03E0  0200  R
00331  03E2  5002            RF(0)     *+4
00332  03E4  207F            HLT
00333  03E6  8140            LD        A1,ONE+4              BIT 13,CR=1
       03E8  020A  R
00334  03EA  5102            RF(1)     *+4
00335  03EC  207F            HLT
00336  03EE  8140            LD        A1,ZERO
       03F0  0200  R
00337  03F2  5002            RF(0)     *+4
00338  03F4  207F            HLT
00339  03F6  8140            LD        A1,ONE+6              BIT 12,CR=1
       03F8  020C  R
00340  03FA  5102            RF(1)     *+4
00341  03FC  207F            HLT
00342  03FE  8140            LD        A1,ZERO
```

```
        0400  0200  R
00343   0402  5002        RF(0)    *+4
00344   0404  207F        HLT
00345   0406  8140        LD       A1,ONE+8          BIT 11,CR=1
        0408  020E  R
00346   040A  5102        RF(1)    *+4
00347   040C  207F        HLT
00348   040E  8140        LD       A1,ZERO
        0410  0200  R
00349   0412  5002        RF(0)    *+4
00350   0414  207F        HLT
00351   0416  8140        LD       A1,ONE+10         BIT 10,CR=1
        0418  0210  R
00352   041A  5102        RF(1)    *+4
00353   041C  207F        HLT
00354   041E  8140        LD       A1,ZERO
        0420  0200  R
00355   0422  5002        RF(0)    *+4
00356   0424  207F        HLT
00357   0426  8140        LD       A1,ONE+12         BIT 09,CR=1
        0428  0212  R
00358   042A  5102        RF(1)    *+4
00359   042C  207F        HLT
00360   042E  8140        LD       A1,ZERO
        0430  0200  R
00361   0432  5002        RF(0)    *+4
00362   0434  207F        HLT
00363   0436  8140        LD       A1,ONE+14         BIT 08,CR=1
        0438  0214  R
00364   043A  5102        RF(1)    *+4
00365   043C  207F        HLT
00366   043E  8140        LD       A1,ZERO
        0440  0200  R
00367   0442  5002        RF(0)    *+4
00368   0444  207F        HLT
00369   0446  8140        LD       A1,ONE+16         BIT 07,CR=1
        0448  0216  R
```

```
00370  0048  5102        RF(1)   *+4
00371  004C  207F        HLT
00372  004E  8140        LD      A1,ZERO
       0050  0200  R
00373  0052  5002        RF(0)   *+4
00374  0054  207F        HLT
00375  0056  8140        LD      A1,ONE+18          BIT 06,CR=1
       0058  0218  R
00376  005A  5102        RF(1)   *+4
00377  005C  207F        HLT
00378  005E  8140        LD      A1,ZERO
       0060  0200  R
00379  0062  5002        RF(0)   *+4
00380  0064  207F        HLT
00381  0066  8140        LD      A1,ONE+20          BIT 05,CR=1
       0068  021A  R
00382  006A  5102        RF(1)   *+4
00383  006C  207F        HLT
00384  006E  8140        LD      A1,ZERO
       0070  0200  R
00385  0072  5002        RF(0)   *+4
00386  0074  207F        HLT
00387  0076  8140        LD      A1,ONE+22          BIT 04,CR=1
       0078  021C  R
00388  007A  5102        RF(1)   *+4
00389  007C  207F        HLT
00390  007E  8140        LD      A1,ZERO
       0080  0200  R
00391  0082  5002        RF(0)   *+4
00392  0084  207F        HLT
00393  0086  8140        LD      A1,ONE+24          BIT 03,CR=1
       0088  021E  R
00394  008A  5102        RF(1)   *+4
00395  008C  207F        HLT
00396  008E  8140        LD      A1,ZERO
       0090  0200  R
00397  0092  5002        RF(0)   *+4
```

```
00398  0094  207F      HLT
00399  0096  8140      LD      A1,ONE+26          BIT 02,CR=1
       0098  0220  R
00400  009A  5102      RF(1)   *+4
00401  009C  207F      HLT
00402  009E  8140      LD      A1,ZERO
       00A0  0200  R
00403  00A2  5002      RF(0)   *+4
00404  00A4  207F      HLT
00405  00A6  8140      LD      A1,ONE+28          BIT 01,CR=1
       00A8  0222  R
00406  00AA  5102      RF(1)   *+4
00407  00AC  207F      HLT
00408  00AE  8140      LD      A1,ZERO
       00B0  0200  R
00409  00B2  5002      RF(0)   *+4
00410  00B4  207F      HLT
00411  00B6  8140      LD      A1,ONE+30          BIT 0,CR=2
       00B8  0224  R
00412  00BA  5202      RF(2)   *+4
00413  00BC  207F      HLT
00414  00BE  8140      LD      A1,ZERO
       00C0  0200  R
00415  00C2  5002      RF(0)   *+4
00416  00C4  207F      HLT
```

```
00417                    EJECT
00418                ******************************************************
00419                *                                                    *
00420                *        XR      EXCLUSIVE   OR                      *
00421                *                                                    *
00422                ******************************************************
00423  04C6  8140        LD      A1,ZERO             0 IN A1,CR=0
       04C8  0200  R
00424  04CA  8140        XR      A1,ONE              0 XR 1,CR=1,BIT 15
       04CC  0206  R
00425  04CE  5102        RF(1)   *+4
00426  04D0  207F        HLT
00427  04D2  8140        XR      A1,DONE             1 XR 1, CR = 0
       04D4  0226  R
00428  04D6  5002        RF(0)   *+4
00429  04D8  207F        HLT
00430  04DA  8140        XR      A1,ONE+2            CR=1,BIT 14
       04DC  0208  R
00431  04DE  5102        RF(1)   *+4
00432  04E0  207F        HLT
00433  04E2  8140        XR      A1,DONE+2           CR=0
       04E4  0228  R
00434  04E6  5002        RF(0)   *+4
00435  04E8  207F        HLT
00436  04EA  8140        XR      A1,ONE+4            CR=1,BIT 13
       04EC  020A  R
00437  04EE  5102        RF(1)   *+4
00438  04F0  207F        HLT
00439  04F2  8140        XR      A1,DONE+4           CR=0
       04F4  022A  R
00440  04F6  5002        RF(0)   *+4
00441  04F8  207F        HLT
00442  04FA  8140        XR      A1,ONE+6            CR=1,BIT 12
       04FC  020C  R
00443  04FE  5102        RF(1)   *+4
00444  0500  207F        HLT
00445  0502  8140        XR      A1,DONE+6           CR=0
```

```
        0504  022C  R
00446   0506  5002        RF(0)   *+4
00447   0508  207F        HLT
00448   050A  B140        XR      A1,ONE+8            CR=1,BIT 11
        050C  020E  R
00449   050E  5102        RF(1)   *+4
00450   0510  207F        HLT
00451   0512  B140        XR      A1,DONE+8           CR=0
        0514  022E  R
00452   0516  5002        RF(0)   *+4
00453   0518  207F        HLT
00454   051A  B140        XR      A1,ONE+10           CR=1,BIT 10
        051C  0210  R
00455   051E  5102        RF(1)   *+4
00456   0520  207F        HLT
00457   0522  B140        XR      A1,DONE+10          CR=0
        0524  0230  R
00458   0526  5002        RF(0)   *+4
00459   0528  207F        HLT
00460   052A  B140        XR      A1,ONE+12           CR=1,BIT 09
        052C  0212  R
00461   052E  5102        RF(1)   *+4
00462   0530  207F        HLT
00463   0532  B140        XR      A1,DONE+12          CR=0
        0534  0232  R
00464   0536  5002        RF(0)   *+4
00465   0538  207F        HLT
00466   053A  B140        XR      A1,ONE+14           CR=1,BIT 08
        053C  0214  R
00467   053E  5102        RF(1)   *+4
00468   0540  207F        HLT
00469   0542  B140        XR      A1,DONE+14          CR=0
        0544  0234  R
00470   0546  5002        RF(0)   *+4
00471   0548  207F        HLT
00472   054A  B140        XR      A1,ONE+16           CR=1,BIT 07
        054C  0216  R
```

```
00473  054E  5102          RF(1)   *+4
00474  0550  207F          HLT
00475  0552  B140          XR      A1,DONE+16          CR=0
       0554  0236  R
00476  0556  5002          RF(0)   *+4
00477  0558  207F          HLT
00478  055A  B140          XR      A1,ONE+18           CR=1,BIT 06
       055C  0218  R
00479  055E  5102          RF(1)   *+4
00480  0560  207F          HLT
00481  0562  B140          XR      A1,DONE+18          CR=0
       0564  0238  R
00482  0566  5002          RF(0)   *+4
00483  0568  207F          HLT
00484  056A  B140          XR      A1,ONE+20           CR=1,BIT 05
       056C  021A  R
00485  056E  5102          RF(1)   *+4
00486  0570  207F          HLT
00487  0572  B140          XR      A1,DONE+20          CR=0
       0574  023A  R
00488  0576  5002          RF(0)   *+4
00489  0578  207F          HLT
00490  057A  B140          XR      A1,ONE+22           CR=1,BIT 04
       057C  021C  R
00491  057E  5102          RF(1)   *+4
00492  0580  207F          HLT
00493  0582  B140          XR      A1,DONE+22          CR=0
       0584  023C  R
00494  0586  5002          RF(0)   *+4
00495  0588  207F          HLT
00496  058A  B140          XR      A1,ONE+24           CR=1,BIT 03
       058C  021E  R
00497  058E  5102          RF(1)   *+4
00498  0590  207F          HLT
00499  0592  B140          XR      A1,DONE+24          CR=0
       0594  023E  R
00500  0596  5002          RF(0)   *+4
```

```
00501  059B  207F        HLT
00502  059A  B140        XR      A1,ONE+26          CR=1,BIT 02
       059C  0220  R
00503  059E  5102        RF(1)   *+4
00504  05A0  207F        HLT
00505  05A2  B140        XR      A1,DONE+26         CR=0
       05A4  0240  R
00506  05A6  5002        RF(0)   *+4
00507  05A8  207F        HLT
00508  05AA  B140        XR      A1,ONE+28          CR=1,BIT 01
       05AC  0222  R
00509  05AE  5102        RF(1)   *+4
00510  05B0  207F        HLT
00511  05B2  B140        XR      A1,DONE+28         CR=0
       05B4  0242  R
00512  05B6  5002        RF(0)   *+4
00513  05B8  207F        HLT
00514  05BA  B140        XR      A1,ONE+30          CR=2,BIT 00
       05BC  0224  R
00515  05BE  5202        RF(2)   *+4
00516  05C0  207F        HLT
00517  05C2  B140        XR      A1,DONE+30         CR=0
       05C4  0244  R
00518  05C6  5002        RF(0)   *+4
00519  05C8  207F        HLT
```

```
00520                    EJECT
00521                *****************************************************
00522                *                                                   *
00523                *        OR        LOGICAL  OR                    *
00524                *                                                   *
00525                *****************************************************
00526                *
00527  05CA  A940        OR        A1,ONE              A1=1,CR=1,BIT 15
       05CC  0206  R
00528  05CE  5102        RF(1)     *+4
00529  05D0  207F        HLT
00530  05D2  B140        XR        A1,DONE             1 XR 1,CR=0
       05D4  0226  R
00531  05D6  5002        RF(0)     *+4
00532  05D8  207F        HLT
00533  05DA  A940        OR        A1,ONE+2            CR=1,BIT 14
       05DC  0208  R
00534  05DE  5102        RF(1)     *+4
00535  05E0  207F        HLT
00536  05E2  B140        XR        A1,DONE+2           CR=0
       05E4  0228  R
00537  05E6  5002        RF(0)     *+4
00538  05E8  207F        HLT
00539  05EA  A940        OR        A1,ONE+4            CR=1,BIT 13
       05EC  020A  R
00540  05EE  5102        RF(1)     *+4
00541  05F0  207F        HLT
00542  05F2  B140        XR        A1,DONE+4           CR=0
       05F4  022A  R
00543  05F6  5002        RF(0)     *+4
00544  05F8  207F        HLT
00545  05FA  A940        OR        A1,ONE+6            CR=1,BIT 12
       05FC  020C  R
00546  05FE  5102        RF(1)     *+4
00547  0600  207F        HLT
00548  0602  B140        XR        A1,DONE+6           CR=0
       0604  022C  R
```

```
00549  0606  5002          RF(0)   *+4
00550  0608  207F          HLT
00551  060A  A940          OR      A1,ONE+8            CR=1,BIT 11
       060C  020E  R
00552  060E  5102          RF(1)   *+4
00553  0610  207F          HLT
00554  0612  B140          XR      A1,DONE+8           CR=0
       0614  022E  R
00555  0616  5002          RF(0)   *+4
00556  0618  207F          HLT
00557  061A  A940          OR      A1,ONE+10           CR=1,BIT 10
       061C  0210  R
00558  061E  5102          RF(1)   *+4
00559  0620  207F          HLT
00560  0622  B140          XR      A1,DONE+10          CR=0
       0624  0230  R
00561  0626  5002          RF(0)   *+4
00562  0628  207F          HLT
00563  062A  A940          OR      A1,ONE+12           CR=1,BIT 09
       062C  0212  R
00564  062E  5102          RF(1)   *+4
00565  0630  207F          HLT
00566  0632  B140          XR      A1,DONE+12          CR=0
       0634  0232  R
00567  0636  5002          RF(0)   *+4
00568  0638  207F          HLT
00569  063A  A940          OR      A1,ONE+14           CR=1,BIT 08
       063C  0214  R
00570  063E  5102          RF(1)   *+4
00571  0640  207F          HLT
00572  0642  B140          XR      A1,DONE+14          CR=0
       0644  0234  R
00573  0646  5002          RF(0)   *+4
00574  0648  207F          HLT
00575  064A  A940          OR      A1,ONE+16           CR=1,BIT 07
       064C  0216  R
00576  064E  5102          RF(1)   *+4
```

```
00577  0650  207F          HLT
00578  0652  B140          XR      A1,DONE+16          CR=0
       0654  0236  R
00579  0656  5002          RF(0)   *+4
00580  0658  207F          HLT
00581  065A  A940          OR      A1,ONE+18           CR=1,BIT 06
       065C  0218  R
00582  065E  5102          RF(1)   *+4
00583  0660  207F          HLT
00584  0662  B140          XR      A1,DONE+18          CR=0
       0664  0238  R
00585  0666  5002          RF(0)   *+4
00586  0668  207F          HLT
00587  066A  A940          OR      A1,ONE+20           CR=1,BIT 05
       066C  021A  R
00588  066E  5102          RF(1)   *+4
00589  0670  207F          HLT
00590  0672  B140          XR      A1,DONE+20          CR=0
       0674  023A  R
00591  0676  5002          RF(0)   *+4
00592  0678  207F          HLT
00593  067A  A940          OR      A1,ONE+22           CR=1,BIT 04
       067C  021C  R
00594  067E  5102          RF(1)   *+4
00595  0680  207F          HLT
00596  0682  B140          XR      A1,DONE+22          CR=0
       0684  023C  R
00597  0686  5002          RF(0)   *+4
00598  0688  207F          HLT
00599  068A  A940          OR      A1,ONE+24           CR=1,BIT 03
       068C  021E  R
00600  068E  5102          RF(1)   *+4
00601  0690  207F          HLT
00602  0692  B140          XR      A1,DONE+24          CR=0
       0694  023E  R
00603  0696  5002          RF(0)   *+4
00604  0698  207F          HLT
```

```
00605  069A  A940        OR      A1,ONE+26          CR=1,BIT 02
       069C  0220  R
00606  069E  5102        RF(1)   *+4
00607  06A0  207F        HLT
00608  06A2  B140        XR      A1,DONE+26         CR=0
       06A4  0240  R
00609  06A6  5002        RF(0)   *+4
00610  06A8  207F        HLT
00611  06AA  A940        OR      A1,ONE+28          CR=1,BIT 01
       06AC  0222  R
00612  06AE  5102        RF(1)   *+4
00613  06B0  207F        HLT
00614  06B2  B140        XR      A1,DONE+28         CR=0
       06B4  0242  R
00615  06B6  5002        RF(0)   *+4
00616  06B8  207F        HLT
00617  06BA  A940        OR      A1,ONE+30          CR=2,BIT 00
       06BC  0224  R
00618  06BE  5202        RF(2)   *+4
00619  06C0  207F        HLT
00620  06C2  B140        XR      A1,DONE+30         CR=0
       06C4  0244  R
00621  06C6  5002        RF(0)   *+4
00622  06C8  207F        HLT
```

```
00623                       EJECT
00624                  ****************************************************
00625                  *                                                  *
00626                  *       AN       LOGICAL  AND                      *
00627                  *                                                  *
00628                  ****************************************************
00629                  *
00630  06CA  8140            LD       A1,ONES              CR=2
       06CC  0202  R
00631  06CE  A140            AN       A1,ONE               CR=1,BIT 15
       06D0  0206  R
00632  06D2  5102            RF(1)    *+4
00633  06D4  207F            HLT
00634  06D6  A140            AN       A1,DONE+2            CR=0
       06D8  0228  R
00635  06DA  5002            RF(0)    *+4
00636  06DC  207F            HLT
00637  06DE  8140            LD       A1,ONES
       06E0  0202  R
00638  06E2  A140            AN       A1,ONE+2             CR=1,BIT 14
       06E4  0208  R
00639  06E6  5102            RF(1)    *+4
00640  06E8  207F            HLT
00641  06EA  A140            AN       A1,DONE+4            CR=0
       06EC  022A  R
00642  06EE  5002            RF(0)    *+4
00643  06F0  207F            HLT
00644  06F2  8140            LD       A1,ONES
       06F4  0202  R
00645  06F6  A140            AN       A1,ONE+4             CR=1,BIT 13
       06F8  020A  R
00646  06FA  5102            RF(1)    *+4
00647  06FC  207F            HLT
00648  06FE  A140            AN       A1,DONE+6            CR=0
       0700  022C  R
00649  0702  5002            RF(0)    *+4
00650  0704  207F            HLT
```

```
00651  0706  8140          LD      A1,ONES
       0708  0202  R
00652  070A  A140          AN      A1,ONE+6          CR=1,BIT 12
       070C  020C  R
00653  070E  5102          RF(1)   *+4
00654  0710  207F          HLT
00655  0712  A140          AN      A1,DONE+8         CR=0
       0714  022F  R
00656  0716  5002          RF(0)   *+4
00657  0718  207F          HLT
00658  071A  8140          LD      A1,ONES
       071C  0202  R
00659  071E  A140          AN      A1,ONE+8          CR=1,BIT 11
       0720  020E  R
00660  0722  5102          RF(1)   *+4
00661  0724  207F          HLT
00662  0726  A140          AN      A1,DONE+10        CR=0
       0728  0230  R
00663  072A  5002          RF(0)   *+4
00664  072C  207F          HLT
00665  072E  8140          LD      A1,ONES
       0730  0202  R
00666  0732  A140          AN      A1,ONE+10         CR=1,BIT 10
       0734  0210  R
00667  0736  5102          RF(1)   *+4
00668  0738  207F          HLT
00669  073A  A140          AN      A1,DONE+12        CR=0
       073C  0232  R
00670  073E  5002          RF(0)   *+4
00671  0740  207F          HLT
00672  0742  8140          LD      A1,ONES
       0744  0202  R
00673  0746  A140          AN      A1,ONE+12         CR=1,BIT 09
       0748  0212  R
00674  074A  5102          RF(1)   *+4
00675  074C  207F          HLT
00676  074E  A140          AN      A1,DONE+14        CR=0
```

```
                0750  0234  R
00677           0752  5002        RF(0)     *+4
00678           0754  207F        HLT
00679           0756  8140        LD        A1,ONES
                0758  0202  R
00680           075A  A140        AN        A1,ONE+14          CR=1,BIT 08
                075C  0214  R
00681           075E  5102        RF(1)     *+4
00682           0760  207F        HLT
00683           0762  A140        AN        A1,DONE+16         CR=0
                0764  0236  R
00684           0766  5002        RF(0)     *+4
00685           0768  207F        HLT
00686           076A  8140        LD        A1,ONES
                076C  0202  R
00687           076E  A140        AN        A1,ONE+16          CR=1,BIT 07
                0770  0216  R
00688           0772  5102        RF(1)     *+4
00689           0774  207F        HLT
00690           0776  A140        AN        A1,DONE+18         CR=0
                0778  0238  R
00691           077A  5002        RF(0)     *+4
00692           077C  207F        HLT
00693           077E  8140        LD        A1,ONES
                0780  0202  R
00694           0782  A140        AN        A1,ONE+18          CR=1,BIT 06
                0784  0218  R
00695           0786  5102        RF(1)     *+4
00696           0788  207F        HLT
00697           078A  A140        AN        A1,DONE+20         CR=0
                078C  023A  R
00698           078E  5002        RF(0)     *+4
00699           0790  207F        HLT
00700           0792  8140        LD        A1,ONES
                0794  0202  R
00701           0796  A140        AN        A1,ONE+20          CR=1,BIT 05
                0798  021A  R
```

```
00702  079A  5102        RF(1)   *+4
00703  079C  207F        HLT
00704  079E  A140        AN      A1,DONE+22          CR=0
       07A0  023C  R
00705  07A2  5002        RF(0)   *+4
00706  07A4  207F        HLT
00707  07A6  8140        LD      A1,ONES
       07A8  0202  R
00708  07AA  A140        AN      A1,ONE+22           CR=1,BIT 04
       07AC  021C  R
00709  07AE  5102        RF(1)   *+4
00710  07B0  207F        HLT
00711  07B2  A140        AN      A1,DONE+24          CR=0
       07B4  023E  R
00712  07B6  5002        RF(0)   *+4
00713  07B8  207F        HLT
00714  07BA  8140        LD      A1,ONES
       07BC  0202  R
00715  07BE  A140        AN      A1,ONE+24           CR=1,BIT 03
       07C0  021E  R
00716  07C2  5102        RF(1)   *+4
00717  07C4  207F        HLT
00718  07C6  A140        AN      A1,DONE+26          CR=0
       07C8  0240  R
00719  07CA  5002        RF(0)   *+4
00720  07CC  207F        HLT
00721  07CE  8140        LD      A1,ONES
       07D0  0202  R
00722  07D2  A140        AN      A1,ONE+26           CR=1,BIT 02
       07D4  0220  R
00723  07D6  5102        RF(1)   *+4
00724  07D8  207F        HLT
00725  07DA  A140        AN      A1,DONE+28          CR=0
       07DC  0242  R
00726  07DE  5002        RF(0)   *+4
00727  07E0  207F        HLT
00728  07E2  8140        LD      A1,ONES
```

```
        07E4  0202  R
00729   07E6  A140        AN      A1,ONE+28           CR=1,BIT 01
        07E8  0222  R
00730   07EA  5102        RF(1)   *+4
00731   07EC  207F        HLT
00732   07EE  A140        AN      A1,DONE+30          CR=0
        07F0  0244  R
00733   07F2  5002        RF(0)   *+4
00734   07F4  207F        HLT
00735   07F6  8140        LD      A1,ONES
        07F8  0202  R
00736   07FA  A140        AN      A1,ONE+30           CR=2,BIT 00
        07FC  0224  R
00737   07FE  5202        RF(2)   *+4
00738   0800  207F        HLT
00739   0802  A140        AN      A1,DONE             CR=0
        0804  0226  R
00740   0806  5002        RF(0)   *+4
00741   0808  207F        HLT
00742   080A  571A        RF(7)   LDKTB
00743
```

```
00744                   EJECT
00745          ****************************************************
00746          *                                                  *
00747          *       CENTRAL PROCESSOR TEST PROGRAM             *
00748          *       ******************************             *
00749          *                                                  *
00750          *  THIS PROGRAM IS BUILT IN THE FOLLOWING WAY :    *
00751          *       -TEST OPERATION CODE:0,                    *
00752          *       -THEN TEST OPERATION CODE:1,               *
00753          *       -AND SO ON TO OPERATION CODE:15,           *
00754          *                                                  *
00755          *  IT IS SPLIT UP IN TO 2 PARTS :                  *
00756          *       -FIRST PART TO TEST THE COMMUN INSTRUC-    *
00757          *        TIONS P852 - P857,                        *
00758          *       -SECOND PART TO TEST THE INSTRUCTIONS      *
00759          *        SPECIFIC TO P857,                         *
00760          *                                                  *
00761          ****************************************************
00762
```

```
00763                          EJECT
00764                  ********************************************************
00765                  *                                                      *
00766                  *                  OPERATION   CODE = 0                *
00767                  *                                                      *
00768                  ********************************************************
00769  0A0C  0818  R   ADLD    DATA    MIONES
00770  0A0E  0206  R   ADLDIN  DATA    ONE
00771  0A10  0A8C  R   LDATP1  DATA    STORP1+2
00772  0A12  0A9E  R   LDATP2  DATA    STORP2+2
00773  0A14  0B00  R   LDATP3  DATA    STORP3+4
00774  0A16  0208  R   LDRDAT  DATA    ONE+2
00775  0A18  00FF      MIONES  DATA    X'00FF'
00776  0A1A  1111      REG1    DATA    X'1111'
00777  0A1C  5555      REG5    DATA    X'5555'
00778  0A1E  6666      REG6    DATA    X'6666'
00779  0A20  AAAA      REGA    DATA    X'AAAA'
00780  0A22  0000      STDAT1  DATA    0
00781  0A24  0A22  R   STDAT3  DATA    STDAT1
00782                  ********************************************************
00783                  *                                                      *
00784                  *        LDK       LOAD  CONSTANT                      *
00785                  *                                                      *
00786                  ********************************************************
00787                  *
00788                  *        LDK       FORMAT T8   SHORT CONSTANT
00789                  ***
00790  0A26  0200      LDKT8   LDK       A2,0                  0 IN REGISTER A2
00791  0A28  B240              XR        A2,ZERO
       0A2A  0200  R
00792  0A2C  5002              RF(0)     *+4                   A2=0
00793  0A2E  207F              HLT
00794  0A30  02FF              LDK       A2,/FF                '00FF' IN REGISTER A2
00795  0A32  B240              XR        A2,MIONES
       0A34  0818  R
00796  0A36  5002              RF(0)     *+4                   A2=0
00797  0A38  207F              HLT
```

```
00798                    ***
00799                    *        LDK      FORMAT T2   LONG CONSTANT
00800                    ***
00801  083A  8120                LDKL     A1,0                CR=0
       083C  0000
00802  083E  5002                RF(0)    *+4
00803  0840  207F                HLT                          WRONG CR
00804  0842  8140                XR       A1,ZERO             CR=0
       0844  0200  R
00805  0846  5002                RF(0)    *+4
00806  0848  207F                HLT
00807  084A  8120                LDKL     A1,/5555            TESTED REGISTER A1
       084C  5555
00808  084E  5102                RF(1)    *+4
00809  0850  207F                HLT                          WRONG CR
00810  0852  8140                XR       A1,REG5
       0854  081C  R
00811  0856  5002                RF(0)    *+4                 A1=0
00812  0858  207F                HLT
00813  085A  8120                LDKL     A1,/AAAA
       085C  AAAA
00814  085E  5202                RF(2)    *+4
00815  0860  207F                HLT                          WRONG CR
00816  0862  8140                XR       A1,REGA
       0864  0820  R
00817  0866  5002                RF(0)    *+4                 A1=0
00818  0868  207F                HLT
00819  086A  8220                LDKL     A2,0                CR=0
       086C  0000
00820  086E  5002                RF(0)    *+4
00821  0870  207F                HLT                          WRONG CR
00822  0872  8220                LDKL     A2,/5555            TESTED REGISTER A2
       0874  5555
00823  0876  5102                RF(1)    *+4
00824  0878  207F                HLT                          WRONG CR
00825  087A  8240                XR       A2,REG5
       087C  081C  R
```

```
00826  087E  5002        RF(0)   *+4             A2=0
00827  0880  207F        HLT
00828  0882  8220        LDKL    A2,/AAAA
       0884  AAAA
00829  0886  5202        RF(2)   *+4
00830  0888  207F        HLT                     WRONG CR
00831  088A  8240        XR      A2,REGA
       088C  0820  R
00832  088E  5002        RF(0)   *+4             A2,0
00833  0890  207F        HLT
00834  0892  8320        LDKL    A3,0            CR=0
       0894  0000
00835  0896  5002        RF(0)   *+4             CR=0
00836  0898  207F        HLT                     WRONG CR
00837  089A  8320        LDKL    A3,/5555        TESTED REGISTER A3
       089C  5555
00838  089E  5102        RF(1)   *+4
00839  08A0  207F        HLT                     WRONG CR
00840  08A2  8340        XR      A3,REG5
       08A4  081C  R
00841  08A6  5002        RF(0)   *+4             A3=0
00842  08A8  207F        HLT
00843  08AA  8320        LDKL    A3,/AAAA
       08AC  AAAA
00844  08AE  5202        RF(2)   *+4
00845  08B0  207F        HLT                     WRONG CR
00846  08B2  8340        XR      A3,REGA
       08B4  0820  R
00847  08B6  5002        RF(0)   *+4             A3=0
00848  08B8  207F        HLT
00849  08BA  8420        LDKL    A4,/5555        TESTED REGISTER A4
       08BC  5555
00850  08BE  8440        XR      A4,REG5
       08C0  081C  R
00851  08C2  5002        RF(0)   *+4             A4=0
00852  08C4  207F        HLT
00853  08C6  8420        LDKL    A4,/AAAA
```

```
                0AC8  AAAA
00854           0ACA  8440          XR        A4,REGA
                0ACC  0820  R
00855           0ACE  5002          RF(0)     *+4               A4=0
00856           0AD0  207F          HLT
00857           0AD2  8520          LDKL      A5,/5555          TESTED REGISTER A5
                0AD4  5555
00858           0AD6  8540          XR        A5,REG5
                0AD8  081C  R
00859           0ADA  5002          RF(0)     *+4               A5=0
00860           0ADC  207F          HLT
00861           0ADE  8520          LDKL      A5,/AAAA
                0AE0  AAAA
00862           0AE2  8540          XR        A5,REGA
                0AE4  0820  R
00863           0AE6  5002          RF(0)     *+4               A5=0
00864           0AE8  207F          HLT
00865           0AEA  8620          LDKL      A6,/5555          TESTED REGISTER A6
                0AEC  5555
00866           0AEE  8640          XR        A6,REG5
                0AF0  081C  R
00867           0AF2  5002          RF(0)     *+4               A6=0
00868           0AF4  207F          HLT
00869           0AF6  8620          LDKL      A6,/AAAA
                0AF8  AAAA
00870           0AFA  8640          XR        A6,REGA
                0AFC  0820  R
00871           0AFE  5002          RF(0)     *+4               A6=0
00872           0900  207F          HLT
00873           0902  8720          LDKL      A7,/5555          TESTED REGISTER A7
                0904  5555
00874           0906  8740          XR        A7,REG5
                0908  081C  R
00875           090A  5002          RF(0)     *+4               A7=0
00876           090C  207F          HLT
00877           090E  8720          LDKL      A7,/AAAA
                0910  AAAA
```

```
00878  0912  B740        XR        A7,REGA
       0914  0820  R
00879  0916  5002        RF(0)     *+4              A7=0
00880  0918  207F        HLT
00881  091A  B0A0        LDKL      A8,/5555         TESTED REGISTER A8
       091C  5555
00882  091E  B0C0        XR        A8,REG5
       0920  081C  R
00883  0922  5002        RF(0)     *+4              A8=0
00884  0924  207F        HLT
00885  0926  B0A0        LDKL      A8,/AAAA
       0928  AAAA
00886  092A  B0C0        XR        A8,REGA
       092C  0820  R
00887  092E  5002        RF(0)     *+4              A8=0
00888  0930  207F        HLT
00889  0932  B1A0        LDKL      A9,/5555         TESTED REGISTER A9
       0934  5555
00890  0936  B1C0        XR        A9,REG5
       0938  081C  R
00891  093A  5002        RF(0)     *+4              A9=0
00892  093C  207F        HLT
00893  093E  B1A0        LDKL      A9,/AAAA
       0940  AAAA
00894  0942  B1C0        XR        A9,REGA
       0944  0820  R
00895  0946  5002        RF(0)     *+4              A9=0
00896  0948  207F        HLT
00897  094A  B2A0        LDKL      A10,/5555        TESTED REGISTER A10
       094C  5555
00898  094E  B2C0        XR        A10,REG5
       0950  081C  R
00899  0952  5002        RF(0)     *+4              A10=0
00900  0954  207F        HLT
00901  0956  B2A0        LDKL      A10,/AAAA
       0958  AAAA
00902  095A  B2C0        XR        A10,REGA
```

```
                095C  0820  R
00903           095E  5002        RF(0)   *+4             A10=0
00904           0960  207F        HLT
00905           0962  83A0        LDKL    A11,/5555       TESTED REGISTER A11
                0964  5555
00906           0966  83C0        XR      A11,REG5
                0968  081C  R
00907           096A  5002        RF(0)   *+4             A11=0
00908           096C  207F        HLT
00909           096E  83A0        LDKL    A11,/AAAA
                0970  AAAA
00910           0972  83C0        XR      A11,REGA
                0974  0820  R
00911           0976  5002        RF(0)   *+4             A11=0
00912           0978  207F        HLT
00913           097A  84A0        LDKL    A12,/5555       TESTED REGISTER A12
                097C  5555
00914           097E  84C0        XR      A12,REG5
                0980  081C  R
00915           0982  5002        RF(0)   *+4             A12=0
00916           0984  207F        HLT
00917           0986  84A0        LDKL    A12,/AAAA
                0988  AAAA
00918           098A  84C0        XR      A12,REGA
                098C  0820  R
00919           098E  5002        RF(0)   *+4             A12=0
00920           0990  207F        HLT
00921           0992  85A0        LDKL    A13,/5555       TESTED REGISTER A13
                0994  5555
00922           0996  85C0        XR      A13,REG5
                0998  081C  R
00923           099A  5002        RF(0)   *+4             A13=0
00924           099C  207F        HLT
00925           099E  85A0        LDKL    A13,/AAAA
                09A0  AAAA
00926           09A2  85C0        XR      A13,REGA
                09A4  0820  R
```

```
00927  09A6  5002        RF(0)   *+4             A13=0
00928  09A8  207F        HLT
00929  09AA  86A0        LDKL    A14,/5555       TESTED REGISTER A14
       09AC  5555
00930  09AE  86C0        XR      A14,REGS
       09B0  081C  R
00931  09B2  5002        RF(0)   *+4             A14=0
00932  09B4  207F        HLT
00933  09B6  86A0        LDKL    A14,/AAAA
       09B8  AAAA
00934  09BA  86C0        XR      A14,REGA
       09BC  0820  R
00935  09BE  5002        RF(0)   *+4             A14=0
00936  09C0  207F        HLT
00937  09C2  87A0        LDKL    A15,/5555       TESTED REGISTER A15
       09C4  5555
00938  09C6  87C0        XR      A15,REGS
       09C8  081C  R
00939  09CA  5002        RF(0)   *+4             A15=0
00940  09CC  207F        HLT
00941  09CE  87A0        LDKL    A15,/AAAA
       09D0  AAAA
00942  09D2  87C0        XR      A15,REGA
       09D4  0820  R
00943  09D6  5002        RF(0)   *+4             A15=0
00944  09D8  207F        HLT
00945  09DA  8120        LDKL    A1,/FFFF        CR=2
       09DC  FFFF
00946  09DE  0100        LDK     A1,0
00947  09E0  5202        RF(2)   *+4
00948  09E2  207F        HLT                     MODIFIED CR
```

```
00949                          EJECT
00950                  ********************************************************
00951                  *                                                      *
00952                  *       LDR      LOAD REGISTER / REGISTER              *
00953                  *                                                      *
00954                  ********************************************************
00955                  *
00956                  *       LDR      FORMAT T1   (R2) TO R1
00957                  ***
00958  09E4  03FF              LDK      A3,/FF
00959  09E6  840C              LDR      A4,A3                 A3 = '00FF'
00960  09E8  8440              XR       A4,MIONES
       09EA  0818  R
00961  09EC  5002              RF(0)    *+4                   A4=0
00962  09EE  207F              HLT
00963    -           *
00964  09F0  0400              LDK      A4,0
00965  09F2  03FF              LDK      A3,/FF
00966  09F4  840C              LDR      A4,A3                 LINE HAS BEEN MODIFED FOR P854/8/9
00967  09F6  8440              XR       A4,MIONES             CR=0
       09F8  0818  R
00968  09FA  5002              RF(0)    *+4
00969  09FC  207F              HLT                            WRONG RESULT
00970                  ***
00971                  *       LDR      FORMAT T3A  ((R2)) TO R1
00972                  ***
00973  09FE  8520              LDKL     A5,ONES               ADDRESS ONES IN A5
       0A00  0202  R
00974  0A02  8634              LDR*     A6,A5
00975  0A04  5202              RF(2)    *+4
00976  0A06  207F              HLT                            WRONG CR
00977  0A08  8640              XR       A6,ONES
       0A0A  0202  R
00978  0A0C  5002              RF(0)    *+4                   A6=0
00979  0A0E  207F              HLT
00980                  ***
00981                  *       LDR      FORMAT T3B  (A15)+2 TO A15
```

```
00982                          *                    ((A15)) TO R1
00983                          ***
00984  0A10  87A0              LDKL    A15,ONE              ADDRESS ONE IN A15
       0A12  0206  R
00985  0A14  873F              LDR*    A7,A15
00986  0A16  5102              RF(1)   *+4
00987  0A18  207F              HLT                          WRONG CR
00988  0A1A  8740              XR      A7,ONE+2
       0A1C  0208  R
00989  0A1E  5002              RF(0)   *+4
00990  0A20  207F              HLT
00991  0A22  87C0              XR      A15,LDRDAT           TEST OF A15
       0A24  0816  R
00992  0A26  5002              RF(0)   *+4
00993  0A28  207F              HLT
00994
```

```
00995                          EJECT
00996                    ***************************************************
00997                    *                                                 *
00998                    *       LD        LOAD REGISTER                   *
00999                    *                                                 *
01000                    ***************************************************
01001                    *
01002                    *       LD        FORMAT T4   (M) TO R1
01003                    ***
01004                    *
01005  0A2A  B7C0              LD        A15,MAXPOS
       0A2C  0204  R
01006  0A2E  B7C0              XR        A15,MAXPOS
       0A30  0204  R
01007  0A32  5002              RF(0)     *+4                   A9=0
01008  0A34  207F              HLT
01009                    ***
01010                    *       LD        FORMAT T5   (M+(R2)) TO R1
01011                    ***
01012                    *
01013  0A36  011C              LDK       A1,28
01014  0A38  B1C4              LD        A9,ONE,A1
       0A3A  0206  R
01015  0A3C  B1C0              XR        A9,DONE+28
       0A3E  0242  R
01016  0A40  5002              RF(0)     *+4                   A9=0
01017  0A42  207F              HLT
01018                    ***
01019                    *       LD        FORMAT T6   ((M)) TO R1
01020                    ***
01021                    *
01022  0A44  B1F0              LD*       A9,ADLD
       0A46  080C  R
01023  0A48  B1C0              XR        A9,MTONES
       0A4A  0818  R
01024  0A4C  5002              RF(0)     *+4                   A9=0
01025  0A4E  207F              HLT
```

```
01026                          ***
01027                          *        LD       FORMAT T7   ((M+(X))) TO R1
01028                          ***
01029  0A50  0102                      LDK      A1,2
01030  0A52  81F4                      LD*      A9,ADLD,A1
       0A54  080C  R
01031  0A56  B1C0                      XR       A9,DONE
       0A58  0226  R
01032  0A5A  5002                      RF(0)    *+4
01033  0A5C  207F                      HLT
01034
```

```
01035                          EJECT
01036                  ******************************************************
01037                  *                                                    *
01038                  *       STR      STORE REGISTER / REGISTER           *
01039                  *                                                    *
01040                  ******************************************************
01041                  *
01042                  *       STR      FORMAT T3A  (R1) TO (R2)
01043                  ***
01044                  *
01045  0A5E  84A0              LDKL     A12,STDAT1
       0A60  0822  R
01046  0A62  83A0              LDKL     A11,/AAAA
       0A64  AAAA
01047  0A66  83B3              STR      A11,A12
01048  0A68  85B2              LDR*     A13,A12
01049  0A6A  85C0              XR       A13,REGA
       0A6C  0820  R
01050  0A6E  5002              RF(0)    *+4                    A13=0
01051  0A70  207F              HLT
01052                  ***
01053                  *       STR      FORMAT T3B  (R1) TO (A15)
01054                  ***                          (A15)=2 TO A15
01055  0A72  87A0              LDKL     A15,STDAT1
       0A74  0822  R
01056  0A76  83A0              LDKL     A11,/5555
       0A78  5555
01057  0A7A  83BF              STR      A11,A15
01058  0A7C  84BE              LDR*     A12,A15
01059  0A7E  84C0              XR       A12,REG5               A12=0
       0A80  081C  R
01060  0A82  5002              RF(0)    *+4
01061  0A84  207F              HLT
01062                  ***
01063                  *       STR      FORMAT T3A  (R1)TO(R2) ,'R1 = P
01064                  ***
01065                  *
```

```
01066  0A86  84A0          LDKL    A12,STDAT1
       0A88  0822  R
01067  0A8A  8033  STORP1  STR     0,A12
01068  0A8C  85C0          LD      A13,STDAT1
       0A8E  0822  R
01069  0A90  B5C0          XR      A13,LDATP1
       0A92  0810  R
01070  0A94  5002          RF(0)   *+4                 A13=0
01071  0A96  207F          HLT
```

```
01072                          EJECT
01073                  ***
01074          -       *       STR     FORMAT T3A  (R1) TO (R2)
01075                  ***                         R1=P,R2=A15,(A15)+2 TO A15
01076                  *
01077  0A98  87A0              LDKL    A15,STDAT1
       0A9A  0822  R
01078  0A9C  803F      STORP2  STR     0,A15
01079  0A9E  83BL              LDR*    A11,A15
01080  0AA0  85C0              XR      A11,LDATP2
       0AA2  0812  R
01081  0AA4  5002              RF(0)   *+4
01082  0AA6  207F              HLT
01083
```

```
01084                       EJECT
01085                  ******************************************************
01086                  *                                                    *
01087                  *       ST       STORE REGISTER                      *
01088                  *                                                    *
01089                  ******************************************************
01090                  *
01091                  *       ST       FORMAT T4C  (R1) TO M
01092                  ***
01093                  *
01094  0AA8  87A0              LDKL     A15,/AAAA
       0AAA  AAAA
01095  0AAC  87C1              ST       A15,STDAT1
       0AAE  0822  R
01096  0AB0  85C0              LD       A13,STDAT1
       0AB2  0822  R
01097  0AB4  85C0              XR       A13,REGA              A13=0
       0AB6  0820  R
01098  0AB8  5002              RF(0)    *+4
01099  0ABA  207F              HLT
01100                  ***
01101                  *       ST       FORMAT T5C  (R1) TO M+(X)
01102                  ***
01103  0ABC  86A0              LDKL     A14,/5555
       0ABE  5555
01104  0AC0  0102              LDK      A1,2
01105  0AC2  86C5              ST       A14,STDAT1-2,A1
       0AC4  0820  R
01106  0AC6  85C0              LD       A13,STDAT1
       0AC8  0822  R
01107  0ACA  85C0              XR       A13,REG5
       0ACC  081C  R
01108  0ACE  5002              RF(0)    *+4                   A13=0
01109  0AD0  207F              HLT
01110                  ***
01111                  *       ST       FORMAT T6C  (R1) TO ((M))
01112                  ***
```

```
01113                    *
01114  0AD2  86A0        LDKL    A14,/1111
       0AD4  1111
01115  0AD6  86F1        ST*     A14,STDAT3
       0AD8  0824  R
01116  0ADA  85C0        LD      A13,STDAT1
       0ADC  0822  R
01117  0ADE  B5C0        XR      A13,REG1
       0AE0  081A  R
01118  0AE2  5002        RF(0)   *+4                 A13=0
01119  0AE4  207F        HLT
```

```
01120                          EJECT
01121                  ****
01122                  *       ST      FORMAT T7C  (R1) TO ((M+(X)))
01123                  ***
01124                  *
01125  0AE6  86A0              LDKL    A14,/6666
       0AE8  6666
01126  0AEA  0102              LDK     A1,2
01127  0AEC  86F5              ST*     A14,STDAT3-2,A1
       0AEE  0822  R
01128  0AF0  85C0              LD      A13,STDAT1
       0AF2  0822  R
01129  0AF4  85C0              XR      A13,REG6
       0AF6  081E  R
01130  0AF8  5002              RF(0)   *+4                     A13=0
01131  0AFA  207F              HLT
01132                  ***
01133                  *       ST      FORMAT T4C  (R1) TO M, R1 = P
01134                  ***
01135                  *
01136  0AFC  8041      STORP3  ST      0,STDAT1
       0AFE  0822  R
01137  0B00  84C0              LD      A12,STDAT1
       0B02  0822  R
01138  0B04  84C0              XR      A12,LDATP3
       0B06  0814  R
01139  0B08  5002              RF(0)   *+4
01140  0B0A  207F              HLT
01141  0B0C  5720              RF(7)   ABT2
01142
```

```
01143                       EJECT
01144                  ******************************************************
01145                  *                                                    *
01146                  *                  OPERATION  CODE 1                 *
01147                  *                                                    *
01148                  ******************************************************
01149                  *
01150  0A6E  0B7C  R    ADBR5    DATA     BR5
01151  0A10  0B6A  R    ADBRH5   DATA     ABHLT5
01152  0A12  0B8C  R    TABI41   DATA     TABI4
01153  0A14  0B98  R    TABI42   DATA     TABI5
01154  0A16  0B80  R    TABI43   DATA     ABIH4
01155  0A18  0BA4  R    TABIS1   DATA     TABIS5
01156  0A1A  0B96  R    TABIS2   DATA     ABIH5
01157  0A1C  0B1E  R    TABI61   DATA     TABI62
01158  0A1E  0BB6  R    TABI62   DATA     TABIS6
01159  0A20  0B22  R    TABI63   DATA     TABI64
01160  0A22  0BAA  R    TABI64   DATA     ABIH6
01161  0A24  0B26  R    TABI71   DATA     TABI72
01162  0A26  0BCA  R    TABI72   DATA     TABIS7
01163  0A28  0B2A  R    TABI73   DATA     TABI74
01164  0A2A  0BBC  R    TABI74   DATA     ABIH7
01165
01166                  *
01167                  ******************************************************
01168                  *                                                    *
01169                  *        AB        ABSOLUTE CONDITIONNAL BRANCH      *
01170                  *
01171                  ******************************************************
01172                  *
01173                  *        AB        FORMAT.T2   KL TO P IF JUMP
01174                  ***                            IF NOT P+2 TO P
01175                  *
01176  0A2C  207F       ABHLT1   HLT
01177  0A2E  8120       ABT2     LDKL     A1,0                  CR=0
       0A30  0000
01178  0A32  8820               ABL(0)   BR1                   JUMP
```

```
        0B34  0B38  R
01179   0B36  207F            HLT
01180   0B38  8C20      BR1   ABL(4)    ABHLT1          DO NOT JUMP
        0B3A  0B2C  R
01181   0B3C  5702            RF(7)     *+4
01182
```

```
01183                       EJECT
01184                  ***************************************************
01185                  *                                                 *
01186                  *   ABR  ABSOLUTE CONDITTIONNAL BRANCH TO REGISTER *
01187                  *                                                 *
01188                  ***************************************************
01189                  *
01190                  *        ABR       FORMAT T1   (R2) TO P IF JUMP
01191                  ***                              IF NOT P+2 TO P
01192                  *
01193  0B3E  207F      ABHLT2   HLT
01194        0B40      BR2      EQU       *
01195  0B40  8220               LDKL      A2,BR3
       0B42  0B50  R
01196  0B44  8320               LDKL      A3,ABHLT2
       0B46  0B3E  R
01197  0B48  8120               LDKL      A1,0                  CR=0
       0B4A  0000
01198  0B4C  8808               ABR(0)    A2                    JUMP
01199  0B4E  207F               HLT
01200  0B50  8C0C      BR3      ABR(4)    A3                    DO NOT JUMP
01201  0B52  5702               RF(7)     *+4
01202                  *
01203  0B54  207F      ABHLT6   HLT
01204        0B56      BR6      EQU       *
01205  0B56  8220               LDKL      A2,BR7
       0B58  0B66  R
01206  0B5A  8320               LDKL      A3,ABHLT6
       0B5C  0B54  R
01207  0B5E  8120               LDKL      A1,0                  CR=0
       0B60  0000
01208  0B62  8809               DATA      /8809                 ABR(0),A2,JUMP,K15=1
01209  0B64  207F               HLT
01210        0B66      BR7      EQU       *
01211  0B66  8C0D               DATA      /8C0D                 ABR(4),A3,DO NOT JUMP,K15=1
01212  0B68  5702               RF(7)     *+4
01213                  ***
```

```
01214                      *       ABR       FORMAT T3S  ((R2) TO P IF JUMP
01215                      ***                           IF NOT P+2 TO P
01216                      *
01217  0B6A  207F          ABHLT5  HLT
01218        0B6C          BR4     EQU       *
01219  0B6C  8220                   LDKL      A2,ADBR5
       0B6E  0B0E  R
01220  0B70  8320                   LDKL      A3,ADBRH5
       0B72  0B10  R
01221  0B74  8120                   LDKL      A1,0                    CR=0
       0B76  0000
01222  0B78  8828                   ABR(0)*   A2                      JUMP
01223  0B7A  207F                   HLT
01224  0B7C  8C2C          BR5      ABR(4)*   A3                      DO NOT JUMP
01225  0B7E  5702                   RF(7)     *+4
01226
```

```
01227                          EJECT
01228                  ********************************************************
01229                  *                                                      *
01230                  *       ABI      ABSOLUTE INDIRECT BRANCH              *
01231                  *                                                      *
01232                  ********************************************************
01233                  *
01234                  *       ABI      FORMAT T4   (M) TO P IF JUMP
01235                  ***                           IF NOT P+2 TO P
01236  0B80  207F      ABIH4    HLT
01237        0B82      BR7A     EQU      *
01238  0B82  8120               LDKL     A1,0                 CR=0
       0B84  0000
01239  0B86  8840               ABI(0)   TABI41               JUMP
       0B88  0B12  R
01240  0B8A  207F               HLT
01241  0B8C  8C40      TABI4    ABI(4)   TABI43               DO NOT JUMP
       0B8E  0B16  R
01242  0B90  8840               ABI(0)   TABI42               JUMP,TEST CR NO CHANGE
       0B92  0B14  R
01243  0B94  207F               HLT
01244                  ***
01245                  *       ABI      FORMAT T5   (M+(X)) TO P IF JUMP
01246                  ***                           IF NOT P+2 TO P
01247                  *
01248  0B96  207F      ABIH5    HLT
01249        0B98      TABI5    EQU      *
01250  0B98  0204               LDK      A2,4
01251  0B9A  8120               LDKL     A1,0                 CR=0
       0B9C  0000
01252  0B9E  8848               ABI(0)   TABI51-4,A2
       0BA0  0B14  R
01253  0BA2  207F               HLT
01254  0BA4  8C48      TABI55   ABI(4)   TABI52-4,A2
       0BA6  0B16  R
01255  0BA8  5702               RF(7)    *+4
01256                  ***
```

```
01257                      *        ABI      FORMAT T6   ((M)) TO P IF JUMP
01258                      ***                          IF NOT P+2 TO P
01259                      *
01260  0BAA  207F          ABIH6    HLT
01261        0BAC          TABI6    EQU      *
01262  0BAC  8120                   LDKL     A1,0                CR=0
       0BAE  0000
01263  0BB0  8860                   ABI(0)*  TABI61               JUMP
       0BB2  0B1C  R
01264  0BB4  207F                   HLT
01265  0BB6  8C60          TABIS6   ABI(4)*  TABI63               DO NOT JUMP
       0BB8  0B20  R
01266  0BBA  5702                   RF(7)    *+4
```

```
01267                          EJECT
01268                  ***
01269                  *       ABI     FORMAT T7   ((M+(X))) TO P IF JUMP
01270                  ***                         IF NOT P+2 TO P
01271                  *
01272  0BBC  207F      ABIH7   HLT
01273        0BBE      TABI7   EQU     *
01274  0BBE  0204              LDK     A2,4
01275  0BC0  8120              LDKL    A1,0                CR=0
       0BC2  0000
01276  0BC4  8868              ABI(0)* TABI71-4,A2         JUMP
       0BC6  0B20  R
01277  0BC8  207F              HLT
01278  0BCA  8C68      TABIS7  ABI(4)* TABI73-4,A2         DO NOT JUMP
       0BCC  0B24  R
01279  0BCE  571E              RF(7)   ADKT8
01280
```

```
01281                       EJECT
01282                  ****************************************************
01283                  *                                                  *
01284                  *                 OPERATION  CODE 2                *
01285                  *                                                  *
01286                  ****************************************************
01287                  *
01288  0BD0  5555      RESAD1   DATA     /5555
01289  0BD2  AAAA      RESAD2   DATA     /AAAA
01290  0BD4  FFFF      RESAD3   DATA     /FFFF
01291  0BD6  8000      RESAD4   DATA     /8000
01292  0BD8  0000      RESAD5   DATA     0
01293  0BDA  0001      RESAD6   DATA     1
01294  0BDC  FFFE      RESAD7   DATA     /FFFE
01295  0BDE  8001      RESAD8   DATA     /8001
01296  0BE0  8200      RESAD9   DATA     /8200
01297  0BE2  0000      VADR1    DATA     0
01298  0BE4  3333      VAD1     DATA     /3333
01299  0BE6  0BD4  R   INDAD1   DATA     RESAD3
01300  0BE8  0BD8  R   INDAD2   DATA     RESAD5
01301  0BEA  0BEC  R   INDAD3   DATA     STADR1
01302  0BEC  0000      STADR1   DATA     0
01303                  *
01304                  ****************************************************
01305                  *                                                  *
01306                  *        ADK       ADDITION CONSTANT               *
01307                  *                                                  *
01308                  ****************************************************
01309                  *
01310                  *        ADK       FORMAT T8   (R3)+KS TO R3
01311                  ***
01312  0BEE  0300      ADKT8    LDK       A3,0
01313  0BF0  1300               ADK       A3,0                 CR=0
01314  0BF2  5002               BF(0)     *+4                  JUMP
01315  0BF4  207F               HLT                            WRONG CR POSITIONING
01316  0BF6  8300               XR        A3,RESAD5
       0BF8  0BD8  R
```

```
01317 0BFA 5002          RF(0)   *+4
01318 0BFC 207F          HLT                     WRONG RESULT
01319                *
01320 0BFE 8420          LDKL    A4,/5500
      0C00 5500
01321 0C02 1455          ADK     A4,/55          CR=1
01322 0C04 5102          RF(1)   *+4
01323 0C06 207F          HLT                     WRONG CR POSITIONING
01324 0C08 B440          XR      A4,RESAD1       CR=0
      0C0A 0BD0  R
01325 0C0C 5002          RF(0)   *+4
01326 0C0E 207F          HLT                     WRONG RESULT
01327                *
01328 0C10 8520          LDKL    A5,/AA00
      0C12 AA00
01329 0C14 15AA          ADK     A5,/AA          CR=2
01330 0C16 5202          RF(2)   *+4
01331 0C18 207F          HLT                     WRONG CR POSITIONING
01332 0C1A B540          XR      A5,RESAD2       CR=0
      0C1C 0BD2  R
01333 0C1E 5002          RF(0)   *+4
01334 0C20 207F          HLT                     WRONG RESULT
01335                *
01336 0C22 8620          LDKL    A6,/FF00
      0C24 FF00
01337 0C26 16FF          ADK     A6,/FF          CR=2
01338 0C28 5202          RF(2)   *+4
01339 0C2A 207F          HLT                     WRONG CR POSITIONING
01340 0C2C B640          XR      A6,RESAD3       CR=0
      0C2E 0BD4  R
01341 0C30 5002          RF(0)   *+4
01342 0C32 207F          HLT
01343                *
01344 0C34 8720          LDKL    A7,/7FFF
      0C36 7FFF
01345 0C38 1701          ADK     A7,1            CR=3
01346 0C3A 5302          RF(3)   *+4
```

```
01347  0C3C  207F              HLT                          WRONG CR POSITIONING
01348  0C3E  B740              XR       A7,RESAD4           CR=0
       0C40  0BD6  R
01349  0C42  5002              RF(0)    *+4
01350  0C44  207F              HLT                          WRONG RESULT
01351                    *
01352                    ***
01353                    *       ADKL     FORMAT T2   (R1)+KL TO R1
01354                    ***
01355                    *
01356  0C46  0100              LDK      A1,0
01357  0C48  9120              ADKL     A1,0                CR=0
       0C4A  0000
01358  0C4C  5002              RF(0)    *+4
01359  0C4E  207F              HLT                          WRONG CR POSITIONING
01360  0C50  B140              XR       A1,RESAD5           CR=0
       0C52  0BD8  R
01361  0C54  5002              RF(0)    *+4
01362  0C56  207F              HLT                          WRONG RESULT
01363                    *
01364  0C58  0255              LDK      A2,/55
01365  0C5A  9220              ADKL     A2,/5500            CR=1
       0C5C  5500
01366  0C5E  5102              RF(1)    *+4
01367  0C60  207F              HLT                          WRONG CR POSITIONING
01368  0C62  B240              XR       A2,RESAD1           CR=0
       0C64  0BD0  R
01369  0C66  5002              RF(0)    *+4
01370  0C68  207F              HLT                          WRONG RESULT
01371                    *
01372  0C6A  03AA              LDK      A3,/AA
01373  0C6C  9320              ADKL     A3,/AA00            CR=2
       0C6E  AA00
01374  0C70  5202              RF(2)    *+4
01375  0C72  207F              HLT                          WRONG CR POSITIONING
01376  0C74  B340              XR       A3,RESAD2           CR=0
       0C76  0BD2  R
```

```
01377  0C78  5002          RF(0)   *+4
01378  0C7A  207F          HLT                     WRONG RESULT
01379                *
01380  0C7C  8420          LDKL    A4,/4000
       0C7E  4000
01381  0C80  9420          ADKL    A4,/4000        CR=3
       0C82  4000
01382  0C84  5302          RF(3)   *+4
01383  0C86  207F          HLT                     WRONG CR POSITIONING
01384  0C88  8440          XR      A4,RESAD4       CR=0
       0C8A  0BD6  R
01385  0C8C  5002          RF(0)   *+4
01386  0C8E  207F          HLT                     WRONG RESULT
01387                *
01388  0C90  87A0          LDKL    A15,1
       0C92  0001
01389  0C94  97A0          ADKL    A15,/7FFF       CR=3
       0C96  7FFF
01390  0C98  5302          RF(3)   *+4
01391  0C9A  207F          HLT                     WRONG CR POSITIONING
01392  0C9C  87C0          XR      A15,RESAD4      CR=0
       0C9E  0BD6  R
01393  0CA0  5002          RF(0)   *+4
01394  0CA2  207F          HLT                     WRONG RESULT
01395
```

```
01396                          EJECT
01397                  ****************************************************
01398                  *                                                  *
01399                  *       ADR      ADDITION REGISTER / REGISTER      *
01400                  *                                                  *
01401                  ****************************************************
01402                  *
01403                  *       ADR      FORMAT T1   (R1)+(R2) TO R1
01404                  ***
01405                  *
01406  0CA4  0600              LDK      A6,0
01407  0CA6  8720              LDKL     A7,/5555
       0CA8  5555
01408  0CAA  961C              ADR      A6,A7                CR=1
01409  0CAC  5102              RF(1)    *+4
01410  0CAE  207F              HLT                           WRONG CR POSITIONING
01411  0CB0  B640              XR       A6,RESAD1
       0CB2  0BD0  R
01412  0CB4  5002              RF(0)    *+4
01413  0CB6  207F              HLT                           WRONG RESULT
01414                  *
01415  0CB8  0600              LDK      A6,0
01416  0CBA  8720              LDKL     A7,/5555
       0CBC  5555
01417  0CBE  961D              DATA     /961D                ADR,A6+A7,CR=1,K15=1
01418  0CC0  5102              RF(1)    *+4
01419  0CC2  207F              HLT                           WRONG CR POSITIONING
01420  0CC4  B640              XR       A6,RESAD1            CR=0
       0CC6  0BD0  R
01421  0CC8  5002              RF(0)    *+4
01422  0CCA  207F              HLT                           WRONG RESULT
01423                  ***
01424                  *       ADR      FORMAT T3   (R1)+((R2)) TO R1
01425                  ***
01426                  *
01427  0CCC  81A0              LDKL     A9,/5555
       0CCE  5555
```

```
01428  0CD0  82A0          LDKL    A10,VADR1
       0CD2  0BF2  R
01429  0CD4  91AA          ADR*    A9,A10              CR=1
01430  0CD6  5102          RF(1)   *+4
01431  0CD8  207F          HLT                         WRONG CR POSITIONING
01432  0CDA  81C0          XR      A9,RFSAD1           CR=0
       0CDC  0BD0  R
01433  0CDE  5002          RF(0)   *+4
01434  0CE0  207F          HLT                         WRONG RESULT
01435                 ***
01436                 *     ADR     T3S         (R1)+((R2)) TO (R2)
01437                 ***
01438  0CE2  87A0          LDKL    A15,/FF
       0CE4  00FF
01439  0CE6  83A0          LDKL    A11,/FF00
       0CE8  FF00
01440  0CEA  83C1          ST      A11,STADR1
       0CEC  0BEC  R
01441  0CEE  83A0          LDKL    A11,STADR1
       0CF0  0BEC  R
01442  0CF2  97AF          ADRS    A15,A11             CR=2
01443  0CF4  5202          RF(2)   *+4
01444  0CF6  207F          HLT                         WRONG CR POSITIONING
01445  0CF8  84C0          LD      A12,STADR1
       0CFA  0BFC  R
01446  0CFC  84C0          XR      A12,RESAD3          CR=0
       0CFE  0BD4  R
01447  0D00  5002          RF(0)   *+4
01448  0D02  207F          HLT                         WRONG RESULT
```

```
01449                          EJECT
01450                  ********************************************************
01451                  *                                                      *
01452                  *       AD       ADDITION                              *
01453                  *                                                      *
01454                  ********************************************************
01455                  *
01456                  ***
01457                  *       AD       FORMAT T4   (R1)+(M) TO R1
01458                  ***
01459                  *
01460  0004  87A0              LDKL     A15,1
       0006  0001
01461  0008  97C0              AD       A15,RESAD3          CR=0
       000A  0BD4  R
01462  000C  5002              RF(0)    *+4
01463  000E  207F              HLT                          WRONG CR POSITIONING
01464  0010  87C0              XR       A15,RESAD5
       0012  0BD8  R
01465  0014  5002              RF(0)    *+4
01466  0016  207F              HLT                          WRONG RESULT
01467                  *
01468                  ***
01469                  *       AD       FORMAT T5   (R1)+(M+(X)) TO R1
01470                  ***
01471                  *
01472  0018  0102              LDK      A1,2
01473  001A  8220              LDKL     A2,/2222
       001C  2222
01474  001E  9244              AD       A2,VAD1-2,A1        CR=1
       0020  0BF2  R
01475  0022  5102              RF(1)    *+4
01476  0024  207F              HLT                          WRONG CR POSITIONING
01477  0026  8240              XR       A2,RESAD1           CR=0
       0028  0BD0  R
01478  002A  5002              RF(0)    *+4
01479  002C  207F              HLT                          WRONG RESULT
```

```
01480                          *
01481                          ***
01482                          *        AD       FORMAT T6   (R1)+((M)) TO R1
01483                          ***
01484                          *
01485  0D2E  0200              *        LDK      A2,0
01486  0D30  9260              *        AD*      A2,INDAD1              CR=2
       0D32  0BE6  R
01487  0D34  5202              *        RF(2)    *+4
01488  0D36  207F              *        HLT                             WRONG CR POSITIONING
01489  0D38  B240              *        XR       A2,RESAD3              CR=0
       0D3A  0BD4  R
01490  0D3C  5002              *        RF(0)    *+4
01491  0D3E  207F              *        HLT                             WRONG RESULT
01492                          *
01493                          ***
01494                          *        AD       FORMAT T7   (R1)+((M+(X)))
01495                          ***
01496                          *
01497  0D40  8320              *        LDKL     A3,/FFFF
       0D42  FFFF
01498  0D44  0604              *        LDK      A6,4
01499  0D46  9378              *        AD*      A3,INDAD2-4,A6         CR=2
       0D48  0BE4  R
01500  0D4A  5202              *        RF(2)    *+4
01501  0D4C  207F              *        HLT                             WRONG CR POSITIONING
01502  0D4E  B340              *        XR       A3,RESAD3              CR=0
       0D50  0BD4  R
01503  0D52  5002              *        RF(0)    *+4
01504  0D54  207F              *        HLT                             WRONG RESULT
01505                          *
01506                          ***
01507                          *        AD       FORMAT T4S  (R1)+(M) TO M
01508                          ***
01509                          *
01510  0D56  0500              *        LDK      A5,0
01511  0D58  8620              *        LDKL     A6,/AAAA
```

```
                0D5A  AAAA
01512           0D5C  8641          ST      A6,STADR1
                0D5E  0BEC  R
01513           0D60  9541          ADS     A5,STADR1           CR=2
                0D62  0BEC  R
01514           0D64  5202          RF(2)   *+4
01515           0D66  207F          HLT                         WRONG CR POSITIONING
01516           0D68  8540          LD      A5,STADR1
                0D6A  0BEC  R
01517           0D6C  8540          XR      A5,RESAD2           CR=0
                0D6E  0BD2  R
01518           0D70  5002          RF(0)   *+4
01519           0D72  207F          HLT                         WRONG RESULT
01520                       *
01521                       ***
01522                       *       AD      FORMAT T5S  (R1)+(M+(X)) TO M+(X)
01523                       ***
01524                       *
01525           0D74  8620          LDKL    A6,/AAAA
                0D76  AAAA
01526           0D78  0700          LDK     A7,0
01527           0D7A  8741          ST      A7,STADR1
                0D7C  0BEC  R
01528           0D7E  0108          LDK     A1,8
01529           0D80  9645          ADS     A6,STADR1-8,A1      CR=2
                0D82  0BE4  R
01530           0D84  5202          RF(2)   *+4
01531           0D86  207F          HLT                         WRONG CR POSITIONING
01532           0D88  81C0          LD      A9,STADR1
                0D8A  0BEC  R
01533           0D8C  81C0          XR      A9,RESAD2           CR=0
                0D8E  0BD2  R
01534           0D90  5002          RF(0)   *+4
01535           0D92  207F          HLT                         WRONG RESULT
01536                       ***
01537                       *       AD      FORMAT T6S  (R1)+((M)) TO (M)
01538                       ***
```

```
01539                          *
01540  0D94  81A0               LDKL    A9,/100
       0D96  0100
01541  0D98  82A0               LDKL    A10,/8100
       0D9A  8100
01542  0D9C  82C1               ST      A10,STADR1
       0D9E  0BEC  R
01543  0DA0  91E1               ADS*    A9,INDAD3               CR=2
       0DA2  0BEA  R
01544  0DA4  5202               RF(2)   *+4
01545  0DA6  207F               HLT                             WRONG CR POSITIONING
01546  0DA8  80C0               LD      A8,STADR1
       0DAA  0BEC  R
01547  0DAC  80C0               XR      A8,RESAD9               CR=0
       0DAE  0BE0  R
01548  0DB0  5002               RF(0)   *+4
01549  0DB2  207F               HLT                             WRONG RESULT
01550                      ***
01551                      *     AD      FORMAT T7S  (R1)+((M+(X))) TO (M+(X))
01552                      ***
01553                      *
01554  0DB4  82A0               LDKL    A10,/FFFF
       0DB6  FFFF
01555  0DB8  83A0               LDKL    A11,/FFFF
       0DBA  FFFF
01556  0DBC  83C1               ST      A11,STADR1
       0DBE  0BEC  R
01557  0DC0  0106               LDK     A1,6
01558  0DC2  92E5               ADS*    A10,INDAD3-6,A1         CR=2
       0DC4  0BF4  R
01559  0DC6  5202               RF(2)   *+4
01560  0DC8  207F               HLT                             WRONG CR POSITIONING
01561  0DCA  84C0               LD      A12,STADR1
       0DCC  0BEC  R
01562  0DCE  84C0               XR      A12,RESAD7              CR=0
       0DD0  0BDC  R
01563  0DD2  5002               RF(0)   *+4
```

01564 0004 207F HLT WRONG RESULT
01565

```
01566                          EJECT
01567                    ******************************************************
01568                    *                                                    *
01569                    *        IMR       INCREMENT MEMORY / REGISTER       *
01570                    *                                                    *
01571                    ******************************************************
01572                    *
01573                    ***
01574                    *        IMR       FORMAT I3   ((R2))+1 TO (R2)
01575                    ***
01576                    *
01577  00D6  8520              LDKL      A5,/FFFF
       00D8  FFFF
01578  00DA  8541              ST.       A5,STADR1
       00DC  0BEC  R
01579  00DE  8620              LDKL      A6,STADR1
       00E0  0BEC  R
01580  00E2  9039              IMR       A6                    CR=0
01581  00E4  5002              RF(0)     *+4
01582  00E6  207F              HLT                             WRONG CR RESULT
01583  00E8  8740              LD        A7,STADR1
       00EA  0BEC  R
01584  00EC  8740              XR        A7,RESAD5
       00EE  0B08  R
01585  00F0  5002              RF(0)     *+4                   CR=0
01586  00F2  207F              HLT                             WRONG RESULT
01587
01588                    ******************************************************
01589                    *                                                    *
01590                    *        IM        INCREMENT MEMORY                  *
01591                    *                                                    *
01592                    ******************************************************
01593                    *
01594                    ***
01595                    *        IM        FORMAT I4   (M)+1 TO M
01596                    ***
01597                    *
```

```
01598 0DF4 81A0          LDKL   A9,/FFFF          (-1)
      0DF6 FFFF
01599 0DF8 81C1          ST     A9,STADR1
      0DFA 0BFC  R
01600 0DFC 9041          IM     STADR1            CR=0
      0DFE 0BFC  R
01601 0E00 5002          RF(0)  *+4
01602 0E02 207F          HLT                      WRONG CR POSITIONING
01603 0E04 82C0          LD     A10,STADR1
      0E06 0BFC  R
01604 0E08 82C0          XR     A10,RESAD5        CR=0
      0E0A 0BD8  R
01605 0E0C 5002          RF(0)  *+4
01606 0E0F 207F          HLT                      WRONG RESULT
01607                          ***
01608                          *     IM     FORMAT T5   (M+(R2))+1 TO M+(R2)
01609                          ***
01610 0E10 0114          LDK    A1,20
01611 0E12 84A0          LDKL   A12,/7FFF
      0E14 7FFF
01612 0E16 84C1          ST     A12,STADR1
      0E18 0BFC  R
01613 0E1A 9045          IM     STADR1-20,A1      CR=3
      0E1C 0BD8  R
01614 0E1F 5302          RF(3)  *+4
01615 0E20 207F          HLT                      WRONG CR POSITIONING
01616 0E22 85C0          LD     A13,STADR1
      0E24 0BFC  R
01617 0E26 85C0          XR     A13,RESAD4        CR=0
      0E28 0BD6  R
01618 0E2A 5002          RF(0)  *+4
01619 0E2C 207F          HLT                      WRONG RESULT
01620                          ***
01621                          *     IM     FORMAT T6   ((M))+1 TO (M)
01622                          ***
01623                          *
01624 0E2E 85A0          LDKL   A13,0
```

```
                0F30  0000
01625           0F32  85C1          ST      A13,STADR1
                0F34  0BEC  R
01626           0F36  9061          IM*     INDAD3              CR=1
                0F38  0BFA  R
01627           0F3A  5102          RF(1)   *+4
01628           0F3C  207F          HLT
01629           0F3E  86C0          LD      A14,STADR1
                0F40  0BFC  R
01630           0F42  86C0          XR      A14,RESAD6          CR=0
                0F44  0BDA  R
01631           0F46  5002          RF(0)   *+4
01632           0F48  207F          HLT
01633                       ***
01634                       *       IM      FORMAT T7  ((M+(R2))) TO (M+(R2))
01635                       ***
01636                       *
01637           0F4A  010A          LDK     A1,10
01638           0F4C  8220          LDKL    A2,/8000
                0F4F  8000
01639           0F50  8241          ST      A2,STADR1
                0F52  0BEC  R
01640           0F54  9065          IM*     INDAD3-10,A1        CR=2
                0F56  0BE0  R
01641           0F58  5202          RF(2)   *+4
01642           0F5A  207F          HLT                         WRONG CR POSITIONING
01643           0F5C  8340          LD      A3,STADR1
                0F5E  0BEC  R
01644           0F60  8340          XR      A3,RESAD8           CR=0
                0F62  0BDE  R
01645           0F64  5002          RF(0)   *+4
01646           0F66  207F          HLT
01647           0F68  5730          RF(7)   SUKT8
01648
```

```
01649                          EJECT
01650                     ******************************************************
01651                     *                                                    *
01652                     *                  OPERATION  CODE 3                 *
01653                     *                                                    *
01654                     ******************************************************
01655                     *
01656  0F6A  0E94  R      INDSU1   DATA     VASUB4
01657  0F6C  0E96  R      INDSU2   DATA     VASUB5
01658  0F6E  0E98  R      INDSU3   DATA     RASUB1
01659  0F70  0000         RESUB1   DATA     0
01660  0F72  5500         RESUB2   DATA     /5500
01661  0F74  AA00         RESUB3   DATA     /AA00
01662  0F76  7F02         RESUB4   DATA     /7F02
01663  0F78  2AAA         RESUB5   DATA     /2AAA
01664  0F7A  5555         RESUB6   DATA     /5555
01665  0F7C  FFFF         RESUB7   DATA     /FFFF
01666  0F7E  0001         RESUB8   DATA     1
01667  0F80  7FF7         RESUB9   DATA     /7FF7
01668  0F82  70F0         RESU10   DATA     /70F0
01669  0F84  FF1F         RESU11   DATA     /FF1F
01670  0F86  1111         RESU12   DATA     /1111
01671  0F88  2222         RESU13   DATA     /2222
01672  0F8A  4444         RESU14   DATA     /4444
01673  0F8C  8000         RESU15   DATA     /8000
01674  0F8E  8001         VASUB1   DATA     /8001              X-'7FFF'
01675  0F90  0003         VASUB2   DATA     3
01676  0F92  00F0         VASUB3   DATA     /00F0
01677  0F94  6666         VASUB4   DATA     /6666
01678  0F96  3333         VASUB5   DATA     /3333
01679  0F98  0000         RASUB1   DATA     0
01680
01681                     *
01682                     ******************************************************
01683                     *                                                    *
01684                     *        SUK       SUBTRACT    CONSTANT              *
01685                     *                                                    *
```

```
01686                    ***************************************************
01687                    *
01688                    ***
01689                    *        SUK       FORMAT T8   (R3)=K TO R3
01690                    ***
01691          0E9A      SUKT8    EQU       *
01692   0E9A   0100               LDK       A1,0
01693   0E9C   1900               SUK       A1,0                 CR=0
01694   0E9E   5002               RF(0)     *+4
01695   0EA0   207F               HLT                            WRONG CR POSITIONING
01696   0EA2   B140               XR        A1,RESUB1            CR=0
        0EA4   0E70   R
01697   0EA6   5002               RF(0)     *+4
01698   0EA8   207F               HLT                            WRONG RESULT
01699                    *
01700   0EAA   8220               LDKL      A2,/5555
        0EAC   5555
01701   0EAE   1A55               SUK       A2,/55               CR=1
01702   0EB0   5102               RF(1)     *+4
01703   0EB2   207F               HLT                            WRONG CR POSITIONING
01704   0EB4   B240               XR        A2,RESUB2            CR=0
        0EB6   0E72   R
01705   0EB8   5002               RF(0)     *+4
01706   0EBA   207F               HLT                            WRONG RESULT
01707                    *
01708   0EBC   8320               LDKL      A3,/AAAA
        0EBE   AAAA
01709   0EC0   1BAA               SUK       A3,/AA               CR=2
01710   0EC2   5202               RF(2)     *+4
01711   0EC4   207F               HLT                            WRONG CR POSITIONING
01712   0EC6   B340               XR        A3,RESUB3            CR=0
        0EC8   0E74   R
01713   0ECA   5002               RF(0)     *+4
01714   0ECC   207F               HLT                            WRONG RESULT
01715                    *
01716   0ECE   8420               LDKL      A4,/8001             (-7FFF)
        0ED0   8001
```

```
01717  0FD2  1CFF          SUK     A4,/FF              CR=3
01718  0FD4  5302          RF(3)   *+4
01719  0FD6  207F          HLT                         WRONG CR POSITIONING
01720  0FD8  B440          XR      A4,RESUB4
       0FDA  0E76  R
01721  0FDC  5002          RF(0)   *+4
01722  0FDE  207F          HLT                         WRONG RESULT
01723                ***
01724                *      SUKL    FORMAT T2   (R1)-KL TO R1
01725                ***
01726                *
01727  0FE0  0500          LDK     A5,0.               (+A5)-(+KL)= A5-KL
01728  0FE2  9D20          SUKL    A5,0                CR=0
       0FE4  0000
01729  0FE6  5002          RF(0)   *+4
01730  0FE8  207F          HLT                         WRONG CR POSITIONING
01731  0FEA  B540          XR      A5,RESUB1
       0FEC  0E70  R
01732  0FEE  5002          RF(0)   *+4
01733  0FF0  207F          HLT                         WRONG RESULT
01734                *
01735  0FF2  8520          LDKL    A5,/FFFF            (-A5)-(-A5)= -A5+A5
       0FF4  FFFF
01736  0FF6  9D20          SUKL    A5,/FFFF            CR=0
       0FF8  FFFF
01737  0FFA  5002          RF(0)   *+4
01738  0FFC  207F          HLT                         WRONG CR POSITIONING
01739  0FFE  B540          XR      A5,RESUB1
       0F00  0E70  R
01740  0F02  5002          RF(0)   *+4
01741  0F04  207F          HLT                         WRONG RESULT
01742                *
01743  0F06  8620          LDKL    A6,/7FFF            (+A6)-(+KL) = A6+KL
       0F08  7FFF
01744  0F0A  9E20          SUKL    A6,/5555            CR=1
       0F0C  5555
01745  0F0E  5102          RF(1)   *+4
```

```
01746  0F10  207F          HLT                    WRONG CR POSITIONING
01747  0F12  8640          XR      A6,RESUB5
       0F14  0E78  R
01748  0F16  5002          RF(0)   *+4
01749  0F18  207F          HLT                    WRONG RESULT
01750                *
01751  0F1A  8720          LDKL    A7,/7FFF       (+A7)-(+KL)= A7-KL
       0F1C  7FFF
01752  0F1E  9F20          SUKL    A7,/2AAA       CR=1
       0F20  2AAA
01753  0F22  5102          RF(1)   *+4
01754  0F24  207F          HLT                    WRONG CR POSITIONING
01755  0F26  8740          XR      A7,RESUB6      CR=0
       0F28  0E7A  R
01756  0F2A  5002          RF(0)   *+4
01757  0F2C  207F          HLT                    WRONG RESULT
01758                *
01759  0F2E  81A0          LDKL    A9,/FFFF
       0F30  FFFF
01760  0F32  99A0          SUKL    A9,0           CR=2
       0F34  0000
01761  0F36  5202          RF(2)   *+4
01762  0F38  207F          HLT                    WRONG CR POSITIONING
01763  0F3A  81C0          XR      A9,RESUB7      CR=0
       0F3C  0E7C  R
01764  0F3E  5002          RF(0)   *+4
01765  0F40  207F          HLT                    WRONG RESULT
01766                *
01767  0F42  87A0          LDKL    A15,0
       0F44  0000
01768  0F46  9FA0          SUKL    A15,/FFFF      CR=1
       0F48  FFFF
01769  0F4A  5102          RF(1)   *+4
01770  0F4C  207F          HLT                    WRONG CR POSITIONING
01771  0F4E  87C0          XR      A15,RESUB8
       0F50  0E7E  R
01772  0F52  5002          RF(0)   *+4
```

```
01773  0F54  207F          HLT                        WRONG RESULT
01774                  *
01775  0F56  83A0          LDKL    A11,/8006          X'-7FFA'
       0F58  8006
01776  0F5A  98A0          SUKL    A11,/F             CR=3
       0F5C  000F
01777  0F5E  5302          RF(3)   *+4
01778  0F60  207F          HLT                        WRONG CR POSITIONING
01779  0F62  83C0          XR      A11,RESUB9
       0F64  0E80  R
01780  0F66  5002          RF(0)   *+4
01781  0F68  207F          HLT                        WRONG RESULT
01782
```

```
01783                          EJECT
01784                  ********************************************************
01785                  *                                                      *
01786                  *       SUR      SUBTRACT  REGISTER / REGISTER         *
01787                  *                                                      *
01788                  ********************************************************
01789                  *
01790                  *       SUR      FORMAT T1   (R1)=(R2) TO R1
01791                  ***
01792  0F6A  87A0              LDKL     A15,/F000              X=,1000,
       0F6C  F000
01793  0F6E  8220              LDKL     A2,/F000
       0F70  F000
01794  0F72  9F88              SUR      A15,A2
01795  0F74  5002              RF(0)    *+4
01796  0F76  207F              HLT                             WRONG CR POSITIONING
01797  0F78  B7C0              XR       A15,RESUB1
       0F7A  0E70  R
01798  0F7C  5002              RF(0)    *+4
01799  0F7E  207F              HLT                             WRONG RESULT
01800                  ***
01801                  *       SUR      FORMAT T3   (R1)=((R2)) TO R1
01802                  ***
01803  0F80  8320              LDKL     A3,/F0F1               X='0F0F'
       0F82  F0F1
01804  0F84  8420              LDKL     A4,VASUB1
       0F86  0E8E  R
01805  0F88  9B30              SUR*     A3,A4                  CR=1
01806  0F8A  5102              RF(1)    *+4
01807  0F8C  207F              HLT                             WRONG CR POSITIONING
01808  0F8E  B340              XR       A3,RESU10              CR=0
       0F90  0E82  R
01809  0F92  5002              RF(0)    *+4
01810  0F94  207F              HLT                             WRONG RESULT
01811                  ***
01812                  *       SUR      FORMAT T3S  (R1)=((R2)) TO (R2)
01813                  ***
```

```
01814  0F96  8520          LDKL    A5,/7FFF
       0F98  7FFF
01815  0F94  8620          LDKL    A6,/F0F
       0F9C  0F0F
01816  0F9E  8641          ST      A6,RASUB1
       0FA0  0E98  R
01817  0FA2  8620          LDKL    A6,RASUB1
       0FA4  0E98  R
01818  0FA6  9D39          SURS    A5,A6               CR=1
01819  0FA8  5102          RF(1)   *+4
01820  0FAA  207F          HLT                         WRONG CR POSITIONING
01821  0FAC  8640          LD      A6,RASUB1
       0FAE  0E98  R
01822  0FB0  B640          XR      A6,RESU10           CR=0
       0FB2  0EB2  R
01823  0FB4  5002          RF(0)   *+4
01824  0FB6  207F          HLT                         WRONG RESULT
01825
```

```
01826                          EJECT
01827                  ********************************************************
01828                  *                                                      *
01829                  *       SU       SUBTRACT                              *
01830                  *                                                      *
01831                  ********************************************************
01832                  *
01833                  ***
01834                  *       SU       FORMAT T4   (R1)-(M) TO R1
01835                  ***
01836                  *
01837  0FB8  87A0              LDKL     A15,2
       0FBA  0002
01838  0FBC  9FC0              SU       A15,VASUB2          CR=2
       0FBE  0E90  R
01839  0FC0  5202              RF(2)    *+4
01840  0FC2  207F              HLT                          WRONG CR POSITIONING
01841  0FC4  B7C0              XR       A15,RESUB7          CR=0
       0FC6  0E7C  R
01842  0FC8  5002              RF(0)    *+4
01843  0FCA  207F              HLT                          WRONG RESULT
01844                  ***
01845                  *       SU       FORMAT T5   (R1)-(M+(X)) TO R1
01846                  ***
01847                  *
01848  0FCC  010F              LDK      A1,/F
01849  0FCE  0202              LDK      A2,2
01850  0FD0  9948              SU       A1,VASUB2,A2        CR=2
       0FD2  0E90  R
01851  0FD4  5202              RF(2)    *+4
01852  0FD6  207F              HLT                          WRONG CR POSITIONING
01853  0FD8  B140              XR       A1,RESU11           CR=0
       0FDA  0E84  R
01854  0FDC  5002              RF(0)    *+4
01855  0FDE  207F              HLT                          WRONG RESULT
01856                  *
01857                  ***
```

```
01858                        *       SU      FORMAT T6   (R1)-((M)) TO R1
01859                        ***
01860                        *
01861  0FE0  82A0                    LDKL    A10,/7777
       0FE2  7777
01862  0FE4  9AE0                    SU*     A10,INDSU1              CR=1
       0FE6  0E6A  R
01863  0FE8  5102                    RF(1)   *+4
01864  0FEA  207F                    HLT                             WRONG CR POSITIONING
01865  0FEC  82C0                    XR      A10,RESU12              CR=0
       0FEE  0E86  R
01866  0FF0  5002                    RF(0)   *+4
01867  0FF2  207F                    HLT                             WRONG RESULT
01868                        *
01869                        ***
01870                        *       SU      FORMAT T7   (R1)-((M+(X))) TO R1
01871                        ***
01872                        *
01873  0FF4  83A0                    LDKL    A11,/5555
       0FF6  5555
01874  0FF8  0106                    LDK     A1,6
01875  0FFA  9BE4                    SU*     A11,INDSU2-6,A1         CR=1
       0FFC  0E66  R
01876  0FFE  5102                    RF(1)   *+4
01877  1000  207F                    HLT                             WRONG CR POSITIONING
01878  1002  83C0                    XR      A11,RESU13              CR=0
       1004  0E88  R
01879  1006  5002                    RF(0)   *+4
01880  1008  207F                    HLT                             WRONG RESULT
01881                        *
01882                        ***
01883                        *       SU      FORMAT T4S  (R1)-(M) TO M
01884                        ***
01885                        *
01886  100A  84A0                    LDKL    A12,/7777
       100C  7777
01887  100E  85A0                    LDKL    A13,/3333
```

```
                1010  3333
01888           1012  85C1          ST      A13,RASUB1
                1014  0E98  R
01889           1016  9CC1          SUS     A12,RASUB1          CR=1
                1018  0E98  R
01890           101A  5102          RF(1)   *+4
01891           101C  207F          HLT                         WRONG CR POSITIONING
01892           101E  85C0          LD      A13,RASUB1
                1020  0E98  R
01893           1022  85C0          XR      A13,RESU14          CR=0
                1024  0E8A  R
01894           1026  5002          RF(0)   *+4
01895           1028  207F          HLT                         WRONG RESULT
01896                         *
01897                         ***
01898                         *       SU      FORMAT T5S  (R1)=(M+(X)) TO M+(X)
01899                         ***
01900           102A  86A0          LDKL    A14,/7777
                102C  7777
01901           102E  86C1          ST      A14,RASUB1
                1030  0E98  R
01902           1032  86A0          LDKL    A14,/7776
                1034  7776
01903           1036  0102          LDK     A1,2
01904           1038  9EC5          SUS     A14,RASUB1-2,A1     CR=2
                103A  0E96  R
01905           103C  5202          RF(2)   *+4
01906           103E  207F          HLT                         WRONG CR POSITIONING
01907           1040  85C0          LD      A13,RASUB1
                1042  0E98  R
01908           1044  85C0          XR      A13,RESUB7          CR=0
                1046  0E7C  R
01909           1048  5002          RF(0)   *+4
01910           104A  207F          HLT                         WRONG RESULT
01911                         ***
01912                         *       SU      FORMAT T6S  (R1)=((M)) TO (M)
01913                         ***
```

```
01914                          *
01915  104C  8120               LDKL    A1,/888A            X'-7776'
       104E  888A
01916  1050  8220               LDKL    A2,/8889            X'-7777'
       1052  8889
01917  1054  8241               ST      A2,RASUB1
       1056  0E98  R
01918  1058  9961               SUS*    A1,INDSU3           CR=1
       105A  0E6E  R
01919  105C  5102               RF(1)   *+4
01920  105E  207F               HLT                         WRONG CR POSITIONING
01921  1060  8240               LD      A2,RASUB1
       1062  0E98  R
01922  1064  8240               XR      A2,RESUB8           CR=0
       1066  0E7E  R
01923  1068  5002               RF(0)   *+4
01924  106A  207F               HLT                         WRONG RESULT
01925                          ***
01926                          *       SU      FORMAT T7S  (R1)-((M+(X))) TO (M)
01927                          ***
01928                          *
01929  106C  8320               LDKL    A3,/EEEF            X'-1111'
       106E  EEEF
01930  1070  8420               LDKL    A4,/CCCD            X'-3333'
       1072  CCCD
01931  1074  8441               ST      A4,RASUB1
       1076  0E98  R
01932  1078  0406               LDK     A4,6
01933  107A  9871               SUS*    A3,INDSU3-6,A4      CR=1
       107C  0E68  R
01934  107E  5102               RF(1)   *+4
01935  1080  207F               HLT                         WRONG CR POSITIONING
01936  1082  8440               LD      A4,RASUB1
       1084  0E98  R
01937  1086  8440               XR      A4,RESUB3           CR=0
       1088  0EA8  R
01938  108A  5002               RF(0)   *+4
```

01939 108C 207F HLT WRONG RESULT
01940

```
01941                          EJECT
01942                  ****************************************************
01943                  *                                                  *
01944                  *       C2R      TWO'S COMPLEMENT / REGISTER       *
01945                  *                                                  *
01946                  ****************************************************
01947                  *
01948                  *       C2R      FORMAT T3   0-((R2)) TO (R2)
01949                  ***
01950                  *
01951  10BE  0100              LDK      A1,0
01952  10C0  8141              ST       A1,RASUB1
       10C2  0E98  R
01953  10C4  8220              LDKL     A2,RASUB1
       10C6  0E98  R
01954  10C8  9829              C2R      A2                    CR=0
01955  10CA  5002              RF(0)    *+4
01956  10CC  207F              HLT                            WRONG CR POSITIONING
01957  10CE  8240              LD       A2,RASUB1
       10D0  0E98  R
01958  10D2  8240              XR       A2,RESUB1             CR=0
       10D4  0E70  R
01959  10D6  5002              RF(0)    *+4
01960  10D8  207F              HLT                            WRONG RESULT
01961                  *
01962  10DA  8320              LDKL     A3,/EEEF              X'-1111'
       10DC  EEEF
01963  10DE  8341              ST       A3,RASUB1
       10E0  0E98  R
01964  10E2  8420              LDKL     A4,RASUB1
       10E4  0E98  R
01965  10E6  9831              C2R      A4                    CR=1
01966  10E8  5102              RF(1)    *+4
01967  10EA  207F              HLT                            WRONG CR POSITIONING
01968  10EC  8440              LD       A4,RASUB1
       10EE  0E98  R
01969  10F0  8440              XR       A4,RESU12             CR=0
```

```
                 10C2  0E86  R
01970            10C4  5002          RF(0)    *+4
01971            10C6  207F          HLT                        WRONG RESULT
01972                                *
01973            10C8  8520          LDKL     A5,/7FFF
                 10CA  7FFF
01974            10CC  8541          ST       A5,RASUB1
                 10CE  0E98  R
01975            10D0  8620          LDKL     A6,RASUB1
                 10D2  0E98  R
01976            10D4  9839          C2R      A6                CR=2
01977            10D6  5202          RF(2)    *+4
01978            10D8  207F          HLT                        WRONG CR POSITIONING
01979            10DA  8540          LD       A5,RASUB1
                 10DC  0E98  R
01980            10DE  8540          XR       A5,VASUB1
                 10F0  0E8E  R
01981            10E2  5002          RF(0)    *+4
01982            10E4  207F          HLT                        WRONG RESULT
01983                                *
01984            10E6  8620          LDKL     A6,/8000
                 10L8  8000
01985            10EA  8641          ST       A6,RASUB1
                 10EC  0E98  R
01986            10EL  8720          LDKL     A7,RASUB1
                 10F0  0E98  R
01987            10F2  983D          C2R      A7                CR=3
01988            10F4  5302          RF(3)    *+4
01989            10F6  207F          HLT                        WRONG CR POSITIONING
01990            10F8  8640          LD       A6,RASUB1
                 10FA  0E98  R
01991            10FC  8640          XR       A6,RESU15         CR=0
                 10FE  0E8C  R
01992            1100  5002          RF(0)    *+4
01993            1102  207F          HLT                        WRONG RESULT
01994
```

```
01995                          EJECT
01996                      ********************************************************
01997                      *                                                      *
01998                      *       C2       TWO'S COMPLEMENT                      *
01999                      *                                                      *
02000                      ********************************************************
02001                      *
02002                      *       C2       FORMAT  T4  0-(M) TO M
02003                      ***
02004                      *
02005  1104  9600                   LDK      A6,0
02006  1106  8641                   ST       A6,RASUB1
       1108  0E98  R
02007  110A  9841                   C2       RASUB1                 CR=0
       110C  0E98  R
02008  110E  5002                   RF(0)    *+4
02009  1110  207F                   HLT                             WRONG CR POSITIONING
02010  1112  8740                   LD       A7,RASUB1
       1114  0E98  R
02011  1116  8740                   XR       A7,RESUB1              CR=0
       1118  0E70  R
02012  111A  5002                   RF(0)    *+4
02013  111C  207F                   HLT                             WRONG RESULT
02014                      *
02015                      ***
02016                      *       C2       FORMAT T5   0-(M+(X)) TO M+(X)
02017                      ***
02018                      *
02019  111E  80A0                   LDKL     A8,/BBBC               X'-4444'
       1120  BBBC
02020  1122  80C1                   ST       A8,RASUB1
       1124  0E98  R
02021  1126  0206                   LDK      A2,6
02022  1128  9849                   C2       RASUB1-6,A2            CR=1
       112A  0E92  R
02023  112C  5102                   RF(1)    *+4
02024  112E  207F                   HLT                             WRONG CR POSITIONING
```

```
02025  1130  80C0        LD      A8,RASUB1
       1132  0F98  R
02026  1134  80C0        XR      A8,RESU14           CR=0
       1136  0E8A  R
02027  1138  5002        RF(0)   *+4
02028  113A  207F        HLT                         WRONG RESULT
02029                *
02030                ***
02031                *     C2    FORMAT T6   0=((M)) TO (M)
02032                ***
02033                *
02034  113C  81A0        LDKL    A9,/5600
       113E  5600
02035  1140  81C1        ST      A9,RASUB1
       1142  0E98  R
02036  1144  9861        C2*     INDSU3              CR=2
       1146  0E6E  R
02037  1148  5202        RF(2)   *+4
02038  114A  207F        HLT                         WRONG CR POSITIONING
02039  114C  81C0        LD      A9,RASUB1
       114E  0E98  R
02040  1150  81C0        XR      A9,RESUB3           CR=0
       1152  0E74  R
02041  1154  5002        RF(0)   *+4
02042  1156  207F        HLT                         WRONG RESULT
02043                *
02044                ***
02045                *     C2    FORMAT T7   0=((M+(X))) TO (M+(X))
02046                ***
02047                *
02048  1158  82A0        LDKL    A10,/8000
       115A  8000
02049  115C  82C1        ST      A10,RASUB1
       115E  0E98  R
02050  1160  040A        LDK     A4,8
02051  1162  9871        C2*     INDSU3-8,A4         CR=3
       1164  0E66  R
```

```
02052  116  5302          RF(3)    *+4
02053  116  207F          HLT                        WRONG CR POSITIONING
02054  116  83C0          LD       A11,RASUB1
       116  0E98  R
02055  116  83C0          XR       A11,RESU15        CR=0
       117  0E8C  R
02056  117  5002          RF(0)    *+4
02057  117  207F          HLT                        WRONG RESULT
02058
```

```
02059                          EJECT
02060                    ******************************************************
02061                    *                                                    *
02062                    *         NGR      NEGATE  REGISTER                  *
02063                    *                                                    *
02064                    ******************************************************
02065                    *
02066                    *         NGR      FORMAT T1   0-(R2) TO R1
02067                    ***
02068                    *
02069  1176  0200              LDK      A2,0                  0 IN R2
02070  1178  01FF              LDK      A1,/FF
02071  117A  9909              NGR      A1,A2
02072  117C  5002              RF(0)    *+4
02073  117E  207F              HLT                            WRONG CR POSITIONNING
02074  1180  8140              XR       A1,RESU81             CR=0
       1182  0E70  R
02075  1184  5002              RF(0)    *+4
02076  1186  207F              HLT                            WRONG RESULT
02077                    *
02078  1188  8420              LDKL     A4,/FFFF
       118A  FFFF
02079  118C  03FF              LDK      A3,/FF
02080  118E  9B11              NGR      A3,A4                 CR=1
02081  1190  5102              RF(1)    *+4
02082  1192  207F              HLT                            WRONG CR POSITIONING
02083  1194  8340              XR       A3,RESU88             CR=0
       1196  0E7E  R
02084  1198  5002              RF(0)    *+4
02085  119A  207F              HLT                            WRONG RESULT
02086  119C  571C              RF(7)    ANKT8
02087
```

```
02088                          EJECT
02089                  ******************************************************
02090                  *                                                    *
02091                  *                  OPERATION   CODE 4                *
02092                  *                                                    *
02093                  ******************************************************
02094                  *
02095                  *
02096  11AE  11A2  R   INDAN1   DATA    RAN1
02097  11A0  11B8  R   INDAN2   DATA    VALAN2
02098  11A2  0000      RAN1     DATA    0
02099  11A4  0000      RESAN1   DATA    0
02100  11A6  00FF      RESAN2   DATA    /00FF
02101  11A8  5555      RESAN3   DATA    /5555
02102  11AA  AAAA      RESAN4   DATA    /AAAA
02103  11AC  FFFF      RESAN5   DATA    /FFFF
02104  11AE  1111      RESAN6   DATA    /1111
02105  11B0  2222      RESAN7   DATA    /2222
02106  11B2  4444      RESAN8   DATA    /4444
02107  11B4  8888      RESAN9   DATA    /8888
02108  11B6  2222      VALAN1   DATA    /2222
02109  11B8  3333      VALAN2   DATA    /3333
02110                  *
02111                  *
02112                  ******************************************************
02113                  *                                                    *
02114                  *       ANK      LOGICAL AND WITH CONSTANT           *
02115                  *                                                    *
02116                  ******************************************************
02117                  *
02118                  *       ANK      FORMAT T8   (R3)/KS TO R3
02119                  ***
02120                  *
02121  11BA  8120      ANKT8    LDKL    A1,/FFFF
       11BC  FFFF
02122  11BE  2100              ANK     A1,0                  CR=0
02123  11C0  5002              RF(0)   *+4
```

```
02124  11C2  207F          HLT                     WRONG CR POSITIONING
02125  11C4  8140          XR      A1,RFSAN1       CR=0
       11C6  11A4  R
02126  11C8  5002          RF(0)   *+4
02127  11CA  207F          HLT                     WRONG RESULT
02128                  *
02129  11CC  8220          LDKL    A2,/FFFF
       11CE  FFFF
02130  11D0  22FF          ANK     A2,/FF          CR=1
02131  11D2  5102          RF(1)   *+4
02132  11D4  207F          HLT                     WRONG CR POSITIONING
02133  11D6  8240          XR      A2,RESAN2       CR=0
       11D8  11A6  R
02134  11DA  5002          RF(0)   *+4
02135  11DC  207F          HLT                     WRONG RESULT
02136                      ***
02137                      *       ANK     FORMAT T2   (R1)/KL TO R1
02138                      ***
02139                      *
02140  11DE  0300          LDK     A3,0
02141  11E0  A320          ANKL    A3,0            CR=0
       11E2  0000
02142  11E4  5002          RF(0)   *+4
02143  11E6  207F          HLT                     WRONG CR POSITIONING
02144  11E8  8340          XR      A3,RESAN1
       11EA  11A4  R
02145  11EC  5002          RF(0)   *+4
02146  11EE  207F          HLT                     WRONG RESULT
02147                  *
02148  11F0  8420          LDKL    A4,/FFFF
       11F2  FFFF
02149  11F4  A420          ANKL    A4,0            CR=0
       11F6  0000
02150  11F8  5002          RF(0)   *+4
02151  11FA  207F          HLT                     WRONG CR POSITIONNING
02152  11FC  8440          XR      A4,RESAN1       CR=0
       11FE  11A4  R
```

```
02153  1200  5002          RF(0)   *+4
02154  1202  207F          HLT                     WRONG RESULT
02155                  *
02156  1204  0500          LDK     A5,0
02157  1206  A520          ANKL    A5,/FFFF        CR=0
       1208  FFFF
02158  120A  5002          RF(0)   *+4
02159  120C  207F          HLT                     WRONG CR POSITIONING
02160  120E  B540          XR      A5,RESAN1       CR=0
       1210  11A4  R
02161  1212  5002          RF(0)   *+4
02162  1214  207F          HLT                     WRONG RESULT
02163                  *
02164  1216  8620          LDKL    A6,/FFFF
       1218  FFFF
02165  121A  A620          ANKL    A6,/5555        CR=1
       121C  5555
02166  121E  5102          RF(1)   *+4
02167  1220  207F          HLT                     WRONG CR POSITIONING
02168  1222  B640          XR      A6,RESAN3       CR=0
       1224  11A8  R
02169  1226  5002          RF(0)   *+4
02170  1228  207F          HLT                     WRONG RESULT
02171                  *
02172  122A  8720          LDKL    A7,/FFFF
       122C  FFFF
02173  122E  A720          ANKL    A7,/AAAA        CR=2
       1230  AAAA
02174  1232  5202          RF(2)   *+4
02175  1234  207F          HLT                     WRONG CR POSITIONING
02176  1236  B740          XR      A7,RESAN4       CR=0
       1238  11AA  R
02177  123A  5002          RF(0)   *+4
02178  123C  207F          HLT                     WRONG RESULT
02179                  *
02180  123E  87A0          LDKL    A15,/FFFF
       1240  FFFF
```

```
02181  1242  A7A0          ANKL    A15,/FFFF          CR=2
       1244  FFFF
02182  1246  5202          RF(2)   *+4
02183  1248  207F          HLT                        WRONG CR POSITIONING
02184  124A  B7C0          XR      A15,RESAN5         CR=0
       124C  11AC  R
02185  124E  5002          RF(0)   *+4
02186  1250  207F          HLT                        WRONG RESULT
02187
```

```
02188                          EJECT
02189                  ****************************************************
02190                  *                                                  *
02191                  *       ANR      LOGICAL AND REGISTER / REGISTER   *
02192                  *                                                  *
02193                  ****************************************************
02194                  *
02195                  *       ANR      FORMAT T1   (R1)/(R2) TO R1
02196                  ***
02197                  *
02198  1252  81A0             LDKL     A9,/FFFF
       1254  FFFF
02199  1256  82A0             LDKL     A10,/1111
       1258  1111
02200  125A  A1BA             ANR      A9,A10              CR=1
02201  125C  5102             RF(1)    *+4
02202  125E  207F             HLT                          WRONG CR POSITIONING
02203  1260  81C0             XR       A9,RESAN6           CR=0
       1262  11AE  R
02204  1264  5002             RF(0)    *+4
02205  1266  207F             HLT                          WRONG RESULT
02206                  ***
02207                  *       ANR      FORMAT T3   (R1)/((R2)) TO R1
02208                  ***
02209                  *
02210  1268  83A0             LDKL     A11,/2222
       126A  2222
02211  126C  0100             LDK      A1,0
02212  126E  8101             ST       A1,RAN1
       1270  11A2  R
02213  1272  84A0             LDKL     A12,RAN1
       1274  11A2  R
02214  1276  A382             ANR*     A11,A12             CR=0
02215  1278  5002             RF(0)    *+4
02216  127A  207F             HLT                          WRONG CR POSITIONNING
02217  127C  83C0             XR       A11,RESAN1          CR=0
       127E  11A4  R
```

```
02218  1280  5002          RF(0)   *+4
02219  1282  207F          HLT                          WRONG RESULT
02220                ***
02221                *       ANR     FORMAT T3S  (R1)/((R2)) TO (R2)
02222                ***
02223                *
02224  1284  87A0          LDKL    A15,/AAAA
       1286  AAAA
02225  1288  86A0          LDKL    A14,/FFFF
       128A  FFFF
02226  128C  86C1          ST      A14,RAN1
       128E  11A2  R
02227  1290  86A0          LDKL    A14,RAN1
       1292  11A2  R
02228  1294  A7BB          ANRS    A15,A14
02229  1296  5202          RF(2)   *+4
02230  1298  207F          HLT                          WRONG CR POSITIONNING
02231  129A  86C0          LD      A14,RAN1
       129C  11A2  R
02232  129E  86C0          XR      A14,RESAN4           CR=0
       12A0  11AA  R
02233  12A2  5002          RF(0)   *+4
02234  12A4  207F          HLT                          WRONG RESULT
02235
```

```
02236                          EJECT
02237                  ********************************************************
02238                  *                                                      *
02239                  *       AN       LOGICAL AND                           *
02240                  *                                                      *
02241                  ********************************************************
02242                  *
02243                  *       AN       FORMAT T4   (R1)/(M) TO R1
02244                  ****    (TESTED IN ELEMENTARY TESTS)
02245                  *
02246                  ***
02247                  *       AN       FORMAT T5   (R1)/(M+(X)) TO R1
02248                  ***
02249                  *
02250  12A6  8120              LDKL     A1,/FFFF
       12A8  FFFF
02251  12AA  0208              LDK      A2,8
02252  12AC  A148              AN       A1,VALAN1-8,A2          ER=1
       12AE  11AE  R
02253  12B0  5102              RF(1)    *+4
02254  12B2  207F              HLT                              WRONG CR POSITIONNING
02255  12B4  B140              XR       A1,RESAN7               CR=0
       12B6  11B0  R
02256  12B8  5002              RF(0)    *+4
02257  12BA  207F              HLT                              WRONG RESULT
02258                  *
02259                  ***
02260                  *       AN       FORMAT T6   (R1)/((M)) TO R1
02261                  ***
02262  12BC  8320              LDKL     A3,/AAAA
       12BE  AAAA
02263  12C0  8420              LDKL     A4,/4444
       12C2  4444
02264  12C4  8441              ST       A4,RAN1
       12C6  11A2  R
02265  12C8  A360              AN*      A3,INDAN1               CR=0
       12CA  119E  R
```

```
02266  12CC  5002          RF(0)   *+4
02267  12CE  207F          HLT                             WRONG CR
02268  12D0  8340          XR      A3,RESAN1               CR=0
       12D2  11A4  R
02269  12D4  5002          RF(0)   *+4
02270  12D6  207F          HLT                             WRONG RESULT
02271                  *
02272                  ***
02273                  *    AN      FORMAT T7   (R1)/((M+(X))) TO R1
02274                  ***
02275                  *
02276  12D8  8420          LDKL    A4,/CCCC
       12DA  CCCC
02277  12DC  0504          LDK     A5,4
02278  12DE  A470          AN*     A4,INDAN2-4,A5          CR=0
       12E0  119C  R
02279  12E2  5002          RF(0)   *+4
02280  12E4  207F          HLT                             WRONG CR
02281  12E6  8440          XR      A4,RESAN1               CR=0
       12E8  11A4  R
02282  12EA  5002          RF(0)   *+4
02283  12EC  207F          HLT                             WRONG RESULT
02284                  *
02285                  ***
02286                  *    AN      FORMAT T4S  (R1)/(M) TO M
02287                  ***
02288                  *
02289  12EE  8620          LDKL    A6,/5555
       12F0  5555
02290  12F2  8720          LDKL    A7,/AAAA
       12F4  AAAA
02291  12F6  8741          ST      A7,RAN1
       12F8  11A2  R
02292  12FA  A641          ANS     A6,RAN1                 CR=0
       12FC  11A2  R
02293  12FE  5002          RF(0)   *+4
02294  1300  207F          HLT                             WRONG CR
```

```
02295  1302  8740          LD      A7,RAN1
       1304  11A2  R
02296  1306  8740          XR      A7,RESAN1           CR=0
       1308  11A4  R
02297  130A  5002          RF(0)   *+4
02298  130C  207F          HLT                         WRONG RESULT
02299                *
02300                ***
02301                *      AN      FORMAT T5S  (R1)/(M+(X)) TO M+(X)
02302                ***
02303                *
02304  130E  81A0          LDKL    A9,/6666
       1310  6666
02305  1312  82A0          LDKL    A10,/CCCC
       1314  CCCC
02306  1316  82C1          ST      A10,RAN1
       1318  11A2  R
02307  131A  0706          LDK     A7,6
02308  131C  A1DD          ANS     A9,RAN1-6,A7        CR=1
       131E  119C  R
02309  1320  5102          RF(1)   *+4
02310  1322  207F          HLT                         WRONG CR
02311  1324  8740          LD      A7,RAN1
       1326  11A2  R
02312  1328  8740          XR      A7,RESAN8           CR=0
       132A  11B2  R
02313  132C  5002          RF(0)   *+4
02314  132E  207F          HLT                         WRONG RESULT
02315                *
02316                ***
02317                *      AN      FORMAT T6S  (R1)/((M)) TO (M)
02318                ***
02319                *
02320  1330  82A0          LDKL    A10,/8888
       1332  8888
02321  1334  83A0          LDKL    A11,/CCCC
       1336  CCCC
```

```
02322  1338  83C1        ST      A11,RAN1
       133A  11A2  R
02323  133C  A2F1        ANS*    A10,INDAN1          CR=2
       133E  119E  R
02324  1340  5202        RF(2)   *+4
02325  1342  207F        HLT                         WRONG CR
02326  1344  83C0        LD      A11,RAN1
       1346  11A2  R
02327  1348  83C0        XR      A11,RESAN9          CR=0
       134A  11B4  R
02328  134C  5002        RF(0)   *+4
02329  134E  207F        HLT                         WRONG RESULT
02330                    *
02331                    ***
02332                    *       AN      FORMAT T7S  (R1)/((M+(X))) TO (M+(X))
02333                    ***
02334                    *
02335  1350  87A0        LDKL    A15,/FF00
       1352  FF00
02336  1354  01FF        LDK     A1,/FF
02337  1356  8141        ST      A1,RAN1
       1358  11A2  R
02338  135A  0108        LDK     A1,8
02339  135C  A7F5        ANS*    A15,INDAN1-8,A1     CR=0
       135E  1196  R
02340  1360  5002        RF(0)   *+4
02341  1362  207F        HLT                         WRONG CR
02342  1364  85C0        LD      A13,RAN1
       1366  11A2  R
02343  1368  85C0        XR      A13,RESAN1          CR=0
       136A  11A4  R
02344  136C  5002        RF(0)   *+4
02345  136E  207F        HLT                         WRONG RESULT
02346
```

```
02347                          EJECT
02348                  ********************************************************
02349                  *                                                      *
02350                  *       TM       TEST MASK                             *
02351                  *                                                      *
02352                  ********************************************************
02353                  *
02354                  *       TM       FORMAT T1    (R1)/(R2)  : 0 TO CR
02355                  ***
02356                  *
02357  1370  0100               LDK      A1,0
02358  1372  0200               LDK      A2,0
02359  1374  A109               TM       A1,A2                 CR=0
02360  1376  5002               RF(0)    *+4
02361  1378  207F               HLT                            WRONG CR
02362                  *
02363  137A  0100               LDK      A1,0
02364  137C  8220               LDKL     A2,/FFFF
       137E  FFFF
02365  1380  A109               TM       A1,A2                 CR=0
02366  1382  5002               RF(0)    *+4
02367  1384  207F               HLT                            WRONG CR
02368                  *
02369  1386  8320               LDKL     A3,/FFFF
       1388  FFFF
02370  138A  0400               LDK      A4,0
02371  138C  A311               TM       A3,A4                 CR=0
02372  138E  5002               RF(0)    *+4
02373  1390  207F               HLT                            WRONG CR
02374                  *
02375  1392  8520               LDKL     A5,/3333
       1394  3333
02376  1396  87A0               LDKL     A15,/2222
       1398  2222
02377  139A  A51F               TM       A5,A15                CR=1
02378  139C  5102               RF(1)    *+4
02379  139E  207F               HLT                            WRONG CR
```

```
02380  13A0  0540          XR      A5,VALAN2          CR=0
       13A2  11B8  R
02381  13A4  5002          RF(0)   *+4
02382  13A6  207F          HLT                        A5 CHANGED
02383  13A8  B7C0          XR      A15,VALAN1         CR=0
       13AA  11B6  R
02384  13AC  5002          RF(0)   *+4
02385  13AE  207F          HLT                        A15 CHANGED
02386                  *
02387  13B0  8620          LDKL    A6,/C0C0
       13B2  C0C0
02388  13B4  8720          LDKL    A7,/8080
       13B6  8080
02389  13B8  A61D          TM      A6,A7              CR=2
02390  13BA  5202          RF(2)   *+4
02391  13BC  207F          HLT                        WRONG CR
02392
```

```
02393                       EJECT
02394                  ******************************************************
02395                  *                                                    *
02396                  *       CMR       CLEAR MEMORY / REGISTER            *
02397                  *                                                    *
02398                  ******************************************************
02399                  *
02400                  *       CMR       FORMAT T3S  0 TO (R2)
02401                  ***
02402                  *
02403  1300  01FF             LDK       A1,/FF
02404  1302  8141             ST        A1,RAN1
       1304  11A2  R
02405  1306  8220             LDKL      A2,RAN1                 CR=1
       1308  11A2  R
02406  130A  A029             CMR       A2
02407  130C  5102             RF(1)     *+4
02408  130E  207F             HLT                               CHANGED CR
02409  1310  8340             LD        A3,RAN1                 CR=0
       1312  11A2  R
02410  1314  5002             RF(0)     *+4
02411  1316  207F             HLT                               WRONG RESULT
02412                  *
02413                  ******************************************************
02414                  *                                                    *
02415                  *       CM        CLEAR MEMORY                       *
02416                  *                                                    *
02417                  ******************************************************
02418                  *
02419                  *       CM        FORMAT T4S  0 TO M
02420                  ***
02421                  *
02422  1318  8120             LDKL      A1,/FFFF
       131A  FFFF
02423  131C  8141             ST        A1,RAN1
       131E  11A2  R
02424  1320  8120             LDKL      A1,0                    CR=0
```

```
        13E0  0000
02425   13E2  A041          CM      RAN1
        13E4  11A2  R
02426   13E6  5002          RF(0)   *+4
02427   13EB  207F          HLT                     CHANGED CR
02428   13EA  8340          LD      A3,RAN1         CR=0
        13EC  11A2  R
02429   13EE  5002          RF(0)   *+4
02430   13F0  207F          HLT                     WRONG RESULT
```

```
02431                          EJECT
02432                    ***
02433                    *     CM       FORMAT T5S  0 TO M+(X)
02434                    ***
02435  13F2  0106              LDK      A1,6
02436  13F4  8220              LDKL     A2,/FFFF
       13F6  FFFF
02437  13F8  8241              ST       A2,RAN1
       13FA  11A2  R
02438  13FC  8320              LDKL     A3,1                  CR=1
       13FE  0001
02439  1400  A045              CM       RAN1-6,A1
       1402  119C  R
02440  1404  5102              RF(1)    *+4
02441  1406  207F              HLT                            CHANGED CR
02442  1408  8440              LD       A4,RAN1               CR=0
       140A  11A2  R
02443  140C  5002              RF(0)    *+4
02444  140E  207F              HLT                            WRONG RESULT
02445                    ***
02446                    *     CM     - FORMAT T6S  0 TO (M)
02447                    ***
02448  1410  8120              LDKL     A1,/FFFF
       1412  FFFF
02449  1414  8141              ST       A1,RAN1
       1416  11A2  R
02450  1418  8220              LDKL     A2,/8000              CR=2
       141A  8000
02451  141C  A061              CM*      INDAN1
       141F  119E  R
02452  1420  5202              RF(2)    *+4
02453  1422  207F              HLT                            CHANGED CR
02454  1424  8340              LD       A3,RAN1               CR=0
       1426  11A2  R
02455  1428  5002              RF(0)    *+4
02456  142A  207F              HLT                            WRONG RESULT
02457                    ***
```

```
02458                          *        CM       FORMAT T7S  0 TO (M+(X))
02459                          ***
02460  142C  8120                      LDKL     A1,/FFFF
       142E  FFFF
02461  1430  8141                      ST       A1,RAN1
       1432  11A2  R
02462  1434  8220                      LDKL     A2,4                  CR=1
       1436  0004
02463  1438  A069                      CM*      INDAN1-4,A2
       143A  119A  R
02464  143C  5102                      RF(1)    *+4
02465  143E  207F                      HLT                            CHANGED CR
02466  1440  8340                      LD       A3,RAN1               CR=0
       1442  11A2  R
02467  1444  5024                      RF(0)    ORKT8
02468  1446  207F                      HLT                            WRONG RESULT
02469
```

```
02470                          EJECT
02471                  ********************************************************
02472                  *                                                      *
02473                  *                  OPERATION   CODE 5                  *
02474                  *                                                      *
02475                  ********************************************************
02476                  *
02477                  *
02478  1448  144E  R    INOR1     DATA     ROR1
02479  144A  1466  R    INOR2     DATA     VALOR1
02480  144C  1468  R    INOR3     DATA     VALOR2
02481  144E  0000       ROR1      DATA     0
02482  1450  0000       RESOR1    DATA     0
02483  1452  00FF       RESOR2    DATA     /FF
02484  1454  FF00       RESOR3    DATA     /FF00
02485  1456  FFFF       RESOR4    DATA     /FFFF
02486  1458  5555       RESOR5    DATA     /5555
02487  145A  AAAA       RESOR6    DATA     /AAAA
02488  145C  1111       RESOR7    DATA     /1111
02489  145E  2222       RESOR8    DATA     /2222
02490  1460  4444       RESOR9    DATA     /4444
02491  1462  8888       RESO10    DATA     /8888
02492  1464  6666       RESO11    DATA     /6666
02493  1466  1100       VALOR1    DATA     /1100
02494  1468  8800       VALOR2    DATA     /8800
02495                  *
02496                  ********************************************************
02497                  *                                                      *
02498                  *        ORK     LOGICAL OR WITH CONSTANT              *
02499                  *                                                      *
02500                  ********************************************************
02501                  *
02502                  *        ORK     FORMAT T8   (R3)R V KS TO (R3)R
02503                  ***                          (R3)L = (R3)L
02504                  *
02505       146A       ORKT8     EQU     *
02506  146A  0100                LDK     A1,0
```

```
02507 146C 2900      ORK     A1,0            CR=0
02508 146E 5002      RF(0)   *+4
02509 1470 207F      HLT                     WRONG CR
02510 1472 8140      XR      A1,RESOR1
      1474 1450  R
02511 1476 5002      RF(0)   *+4
02512 1478 207F      HLT                     WRONG RESULT
02513              *
02514 147A 02FF      LDK     A2,/FF
02515 147C 2A00      ORK     A2,0            CR=1
02516 147E 5102      RF(1)   *+4
02517 1480 207F      HLT                     WRONG CR POSITIONNING
02518 1482 8240      XR      A2,RESOR2       CR=0
      1484 1452  R
02519 1486 5002      RF(0)   *+4
02520 1488 207F      HLT                     WRONG RESULT
02521              *
02522 148A 8320      LDKL    A3,/FF00
      148C FF00
02523 148E 2800      ORK     A3,0            CR=2
02524 1490 5202      RF(2)   *+4
02525 1492 207F      HLT                     WRONG CR POSITIONNING
02526 1494 8340      XR      A3,RESOR3       CR=0
      1496 1454  R
02527 1498 5002      RF(0)   *+4
02528 149A 207F      HLT                     WRONG RESULT
02529              *
02530 149C 8420      LDKL    A4,/FF00
      149E FF00
02531 14A0 2CFF      ORK     A4,/FF          CR=2
02532 14A2 5202      RF(2)   *+4
02533 14A4 207F      HLT                     WRONG CR POSITIONNING
02534 14A6 8440      XR      A4,RESOR4       CR=0
      14A8 1456  R
02535 14AA 5002      RF(0)   *+4
02536 14AC 207F      HLT                     WRONG RESULT
02537              *
```

```
02538                    ***
02539                    *       ORK     FORMAT T2   (R1) V KL TO R1
02540                    ***
02541                    *
02542  14AE  0500               LDK     A5,0
02543  14B0  AD20               ORKL    A5,0                CR=0
       14B2  0000
02544  14B4  5002               RF(0)   *+4
02545  14B6  207F               HLT                         WRONG CR POSITIONNING
02546  14B3  B540               XR      A5,RESOR1           CR=0
       14BA  1450  R
02547  14BC  5002               RF(0)   *+4
02548  14BE  207F               HLT                         WRONG RESULT
02549                    *
02550  14C0  8620               LDKL    A6,/FFFF
       14C2  FFFF
02551  14C4  AE20               ORKL    A6,/FFFF            CR=2
       14C6  FFFF
02552  14C8  5202               RF(2)   *+4
02553  14CA  207F               HLT                         WRONG CR POSITIONNING
02554  14CC  B640               XR      A6,RESOR4           CR=0
       14CE  1456  R
02555  14D0  5002               RF(0)   *+4
02556  14D2  207F               HLT                         WRONG RESULT
02557                    *
02558  14D4  8720               LDKL    A7,/1111
       14D6  1111
02559  14D8  AF20               ORKL    A7,/4444            CR=1
       14DA  4444
02560  14DC  5102               RF(1)   *+4
02561  14DE  207F               HLT                         WRONG CR POSITIONNING
02562  14E0  B740               XR      A7,RESOR5           CR=0
       14E2  1458  R
02563  14E4  5002               RF(0)   *+4
02564  14E6  207F               HLT                         WRONG RESULT
02565                    *
02566  14E8  81A0               LDKL    A9,/2222
```

```
                1AEA  2222
02567           1AEC  A9A0          ORKL    A9,/8888          CR=2
                1AEE  8888
02568           1AF0  5202          RF(2)   *+4
02569           1AF2  207F          HLT                       WRONG CR POSITIONNING
02570           1AF4  B1C0          XR      A9,RESOR6
                1AF6  145A  R
02571           1AF8  5002          RF(0)   *+4
02572           1AFA  207F          HLT                       WRONG RESULT
02573
```

```
02574                          EJECT
02575                  ********************************************************
02576                  *                                                      *
02577                  *       ORR      LOGICAL OR REGISTER / REGISTER        *
02578                  *                                                      *
02579                  ********************************************************
02580                  *
02581                  *       ORR      FORMAT T1   (R1) V (R2) TO R1
02582                  ***
02583  14FC  82A0              LDKL     A10,/4444
       14FE  4444
02584  1500  83A0              LDKL     A11,/1111
       1502  1111
02585  1504  AA8E              ORR      A10,A11              CR=1
02586  1506  5102              RF(1)    *+4
02587  1508  207F              HLT                           WRONG CR POSITIONNING
02588  150A  82C0              XR       A10,RESOR5           CR=0
       150C  1458  R
02589  150E  5002              RF(0)    *+4
02590  1510  207F              HLT                           WRONG RESULT
02591                  ***
02592                  *       ORR      FORMAT T3   (R1) V ((R2)) TO R1
02593                  ***
02594  1512  85A0              LDKL     A13,/2222
       1514  2222
02595  1516  84A0              LDKL     A12,RES010
       1518  1462  R
02596  151A  AD82              ORR*     A13,A12              CR=2
02597  151C  5202              RF(2)    *+4
02598  151E  207F              HLT                           WRONG CR POSITIONNING
02599  1520  85C0              XR       A13,RESOR6           CR=0
       1522  145A  R
02600  1524  5002              RF(0)    *+4
02601  1526  207F              HLT                           WRONG RESULT
02602                  ***
02603                  *       ORR      FORMAT T3S  (R1) V ((R2)) TO (R2)
02604                  ***
```

```
02605  1528  87A0        LDKL    A15,/1111
       152A  1111
02606  152C  87C1        ST      A15,RORI
       152E  144E  R
02607  1530  86A0        LDKL    A14,/4444
       1532  4444
02608  1534  87A0        LDKL    A15,RORI
       1536  144E  R
02609  1538  AEBF        ORRS    A14,A15             CR=1
02610  153A  5102        RF(1)   *+4
02611  153C  207F        HLT                         WRONG CR
02612  153E  B140        LD      A1,RORI
       1540  144F  R
02613  1542  B140        XR      A1,RESORS           CR=0
       1544  1458  R
02614  1546  5002        RF(0)   *+4
02615  1548  207F        HLT                         WRONG RESULT
02616
```

```
02617                          EJECT
02618                  ********************************************************
02619                  *                                                      *
02620                  *       OR       LOGICAL OR                            *
02621                  *                                                      *
02622                  ********************************************************
02623                  *
02624                  *       OR       FORMAT T4   (R1) V (M) TO R1
02625                  ***     (TESTED IN ELEMENTARY TESTS)
02626                  *
02627                  ***
02628                  *       OR       FORMAT T5   (R1) V (M+(X)) TO R1
02629                  ***
02630                  *
02631  154A  0104             LDK      A1,4
02632  154C  0200             LDK      A2,0
02633  154E  AAA4             OR       A2,RESOR1-4,A1          CR=0
       1550  144C  R
02634  1552  5002             RF(0)    *+4
02635  1554  207F             HLT                              WRONG CR
02636  1556  8240             XR       A2,RESOR1               CR=0
       1558  1450  R
02637  155A  5002             RF(0)    *+4
02638  155C  207F             HLT                              WRONG RESULT
02639                  ***
02640                  *       OR       FORMAT T6   (R1) V ((M)) TO R1
02641                  ***
02642                  *
02643  155E  0211             LDK      A2,/11
02644  1560  AA60             OR*      A2,INOR2                CR=1
       1562  144A  R
02645  1564  5102             RF(1)    *+4
02646  1566  207F             HLT                              WRONG CR
02647  1568  8240             XR       A2,RESOR7               CR=0
       156A  145C  R
02648  156C  5002             RF(0)    *+4
02649  156E  207F             HLT                              WRONG RESULT
```

```
02650                          ***
02651                          *       OR      FORMAT T7   (R1) V ((M+(X)) TO R1
02652                          ***
02653                          *
02654  1570  0308               LDK     A3,8
02655  1572  0488               LDK     A4,/88
02656  1574  AC6C               OR*     A4,INOR3-8,A3          CR=2
       1576  1444  R
02657  1578  5202               RF(2)   *+4
02658  157A  207F               HLT                            WRONG CR
02659  157C  8440               XR      A4,RESO10              CR=0
       157E  1462  R
02660  1580  5002               RF(0)   *+4
02661  1582  207F               HLT                            WRONG RESULT
02662                          ***
02663                          *       OR      FORMAT T4S  (R1) V (M) TO M
02664                          ***
02665                          *
02666  1584  0500               LDK     A5,0
02667  1586  8541               ST      A5,ROR1
       1588  144F  R
02668  158A  8620               LDKL    A6,/FFFF
       158C  FFFF
02669  158E  AE41               ORS     A6,ROR1                CR=2
       1590  144F  R
02670  1592  5202               RF(2)   *+4
02671  1594  207F               HLT                            WRONG CR
02672  1596  8740               LD      A7,ROR1
       1598  144E  R
02673  159A  8740               XR      A7,RESOR4              CR=0
       159C  1456  R
02674  159E  5002               RF(0)   *+4
02675  15A0  207F               HLT                            WRONG RESULT
02676                          ***
02677                          *       OR      FORMAT T5S  (R1) V (M+(X)) TO M+(X)
02678                          ***
02679                          *
```

```
02680  15A2  0104          LDK     A1,4
02681  15A4  82A0          LDKL    A10,/4444
       15A6  4444
02682  15A8  82C1          ST      A10,ROR1
       15AA  144E  R
02683  15AC  83A0          LDKL    A11,/2222
       15AE  2222
02684  15B0  ABC5          ORS     A11,ROR1-4,A1          CR=1
       15B2  144A  R
02685  15B4  5102          RF(1)   *+4
02686  15B6  207F          HLT                            WRONG CR
02687  15B8  84C0          LD      A12,ROR1
       15BA  144E  R
02688  15BC  84C0          XR      A12,RES011             CR=0
       15BF  1464  R
02689  15C0  5002          RF(0)   *+4
02690  15C2  207F          HLT                            WRONG RESULT
02691                ***
02692                *      OR      FORMAT T6S  (R1) V ((M)) TO (M)
02693                ***
02694                *
02695  15C4  86A0          LDKL    A14,/8888
       15C6  8888
02696  15C8  86C1          ST      A14,ROR1
       15CA  144E  R
02697  15CC  87A0          LDKL    A15,0
       15CE  0000
02698  15D0  AFF1          ORS*    A15,INOR1              CR=2
       15D2  1448  R
02699  15D4  5202          RF(2)   *+4
02700  15D6  207F          HLT                            WRONG CR
02701  15D8  85C0          LD      A13,ROR1
       15DA  144F  R
02702  15DC  85C0          XR      A13,RES010             CR=0
       15DE  1462  R
02703  15E0  5002          RF(0)   *+4
02704  15E2  207F          HLT                            WRONG RESULT
```

```
02705                          ***
02706                          *        OR      FORMAT T7S  (R1) V ((M+(X))) TO (M+(X))
02707                          ***
02708                          *
02709  15E4  0106                      LDK     A1,6
02710  15E6  8220                      LDKL    A2,/1111
       15E8  1111
02711  15EA  8241                      ST      A2,ROR1
       15EC  144E  R
02712  15EE  8220                      LDKL    A2,/4444
       15F0  4444
02713  15F2  AA65                      ORS*    A2,INOR1-6,A1          CR=1
       15F4  1442  R
02714  15F6  5102                      RF(1)   *+4
02715  15F8  207F                      HLT                            WRONG CR
02716  15FA  8340                      LD      A3,ROR1
       15FC  144E  R
02717  15FE  8340                      XR      A3,RFSOR5              CR=0
       1600  1458  R
02718  1602  5030                      RF(0)   XRKT8
02719  1604  207F                      HLT                            WRONG RESULT
02720
```

```
02721                          EJECT
02722                  ********************************************************
02723                  *                                                      *
02724                  *                   OPERATION   CODE 6                 *
02725                  *                                                      *
02726                  ********************************************************
02727                  *
02728  1606  1630  R    INDXR1   DATA     VALXR1
02729  1608  1618  R    INDXR2   DATA     RESXR6
02730  160A  160C  R    INDXR3   DATA     RANXR1
02731  160C  0000       RANXR1   DATA     0
02732  160E  0000       RESXR1   DATA     0
02733  1610  00FF       RESXR2   DATA     /00FF
02734  1612  FFFF       RESXR3   DATA     /FFFF
02735  1614  FF00       RESXR4   DATA     /FF00
02736  1616  7FFF       RESXR5   DATA     /7FFF
02737  1618  5555       RESXR6   DATA     /5555
02738  161A  AAAA       RESXR7   DATA     /AAAA
02739  161C  6666       RESXR8   DATA     /6666
02740  161E  8888       RESXR9   DATA     /8888
02741  1620  0010       RSLN1    DATA     16
02742  1622  000E       RSLN2    DATA     14
02743  1624  0000       RSLN3    DATA     0
02744  1626  0007       RSLN4    DATA     7
02745  1628  000F       RSLN5    DATA     15
02746  162A  8000       RSLN6    DATA     /8000
02747  162C  FFFF       RSRN1    DATA     /FFFF
02748  162E  0001       RSRN2    DATA     1
02749  1630  2222       VALXR1   DATA     /2222
02750  1632  4444       VALXR2   DATA     /4444
02751                  *
02752                  ********************************************************
02753                  *                                                      *
02754                  *         XRK       EXCLUSIVE OR WITH CONSTANT         *
02755                  *                                                      *
02756
02757                  ********************************************************
```

```
02758                          *
02759                          *        XRK      FORMAT T8   (R3) / KS TO R3
02760                          ***                             R          R
02761                          *                            (R3) = (R3)
02762                          *                               L      L
02763          1634            XRKT8    EQU      *                  *
02764  1634    0100                     LDK      A1,0
02765  1636    3100                     XRK      A1,0               CR=0
02766  1638    5002                     RF(0)    *+4
02767  163A    207F                     HLT                         WRONG CR
02768  163C    8140                     XR       A1,RESXR1          CR=0
       163E    160F  R
02769  1640    5002                     RF(0)    *+4
02770  1642    207F                     HLT                         WRONG RESULT
02771                          *
02772  1644    0200                     LDK      A2,0
02773  1646    32FF                     XRK      A2,/FF             CR=1
02774  1648    5102                     RF(1)    *+4
02775  164A    207F                     HLT                         WRONG CR
02776  164C    8240                     XR       A2,RESXR2          CR=0
       164E    1610  R
02777  1650    5002                     RF(0)    *+4
02778  1652    207F                     HLT                         WRONG RESULT
02779                          *
02780  1654    8320                     LDKL     A3,/FF00
       1656    FF00
02781  1658    33FF                     XRK      A3,/FF             CR=2
02782  165A    5202                     RF(2)    *+4
02783  165C    207F                     HLT                         WRONG CR
02784  165E    8340                     XR       A3,RESXR3          CR=0
       1660    1612  R
02785  1662    5002                     RF(0)    *+4
02786  1664    207F                     HLT                         WRONG RESULT
02787                          *
02788  1666    8420                     LDKL     A4,/FFFF
       1668    FFFF
02789  166A    34FF                     XRK      A4,/FF             CR=2
```

```
02790 166C 5202          RF(2)   *+4
02791 166E 207F          HLT                             WRONG CR
02792 1670 8440          XR      A4,RESXR4               CR=0
      1672 1614  R
02793 1674 5002          RF(0)   *+4
02794 1676 207F          HLT                             WRONG RESULT
02795                ***
02796                *   XRKL    FORMAT T2   (R1) / KL TO R1
02797                ***
02798                *
02799 1678 0500          LDK     A5,0
02800 167A 8520          XRKL    A5,0                    CR=0
      167C 0000
02801 167E 5002          RF(0)   *+4
02802 1680 207F          HLT                             WRONG CR POSITIONING
02803 1682 8540          XR      A5,RESXR1               CR=0
      1684 160E  R
02804 1686 5002          RF(0)   *+4
02805 1688 207F          HLT                             WRONG RESULT
02806                *
02807 168A 8620          LDKL    A6,/FFFF
      168C FFFF
02808 168E 8620          XRKL    A6,0                    CR=2
      1690 0000
02809 1692 5202          RF(2)   *+4
02810 1694 207F          HLT                             WRONG CR POSITIONING
02811 1696 8640          XR      A6,RESXR3               CR=0
      1698 1612  R
02812 169A 5002          RF(0)   *+4
02813 169C 207F          HLT                             WRONG RESULT
02814                *
02815 169E 0700          LDK     A7,0
02816 16A0 8720          XRKL    A7,/FFFF                CR=2
      16A2 FFFF
02817 16A4 5202          RF(2)   *+4
02818 16A6 207F          HLT                             WRONG CR
02819 16A8 8740          XR      A7,RESXR3               CR=0
```

```
                16AA  1612  R
02820           16AC  5002        RF(0)     *+4
02821           16AE  207F        HLT                          WRONG RESULT
02822                       *
02823           16B0  81A0        LDKL      A9,/5555
                16B2  5555
02824           16B4  81A0        XRKL      A9,/AAAA           CR=2
                16B6  AAAA
02825           16B8  5202        RF(2)     *+4
02826           16BA  207F        HLT                          WRONG CR
02827           16BC  81C0        XR        A9,RFSXR3          CR=0
                16BE  1612  R
02828           16C0  5002        RF(0)     *+4
02829           16C2  207F        HLT                          WRONG RESULT
02830                       *
02831           16C4  87A0        LDKL      A15,/2AAA
                16C6  2AAA
02832           16C8  87A0        XRKL      A15,/5555          CR=1
                16CA  5555
02833           16CC  5102        RF(1)     *+4
02834           16CE  207F        HLT                          WRONG CR
02835           16D0  87C0        XR        A15,RFSXR5         CR=0
                16D2  1616  R
02836           16D4  5002        RF(0)     *+4
02837           16D6  207F        HLT                          WRONG RESULT
02838
```

```
02839                          EJECT
02840                  ********************************************************
02841                  *                                                      *
02842                  *        XRR       EXCLUSIVE OR REGISTER / REGISTER    *
02843                  *                                                      *
02844                  ********************************************************
02845                  *
02846                  ***
02847                  *        XRR       FORMAT T1   (R1) / (R2) TO R1
02848                  ***
02849                  *
02850  16D8  83A0              LDKL      A11,/1111
       16DA  1111
02851  16DC  84A0              LDKL      A12,/4444
       16DE  4444
02852  16E0  8392              XRR       A11,A12              CR=1
02853  16E2  5102              RF(1)     *+4
02854  16E4  207F              HLT                            WRONG CR
02855  16E6  83C0              XR        A11,RESXR6           CR=0
       16E8  1618  R
02856  16EA  5002              RF(0)     *+4
02857  16EC  207F              HLT                            WRONG RESULT
02858                  *
02859                  ***
02860                  *        XRR       FORMAT T3   (R1) / ((R2)) TO R1
02861                  ***
02862                  *
02863  16EE  85A0              LDKL      A13,/8888
       16F0  8888
02864  16F2  86A0              LDKL      A14,/2222
       16F4  2222
02865  16F6  86C1              ST        A14,VALXR1
       16F8  1630  R
02866  16FA  86A0              LDKL      A14,VALXR1
       16FC  1630  R
02867  16FE  85BA              XRR*      A13,A14              CR=2
02868  1700  5202              RF(2)     *+4
```

```
02869  1702  207F                HLT                              WRONG CR
02870  1704  A5C0                XR       A13,RESXR7              CR=0
       1706  161A  R
02871  1708  5002                RF(0)    *+4
02872  170A  207F                HLT
02873                    *
02874                    ***
02875                    *       XRR      FORMAT T3S  (R1) / ((R2)) TO (R2)
02876                    ***
02877                    *
02878  170C  8120                LOKL     A1,/4444
       170E  4444
02879  1710  8141                ST       A1,RANXR1
       1712  160C  R
02880  1714  8220                LOKL     A2,RANXR1
       1716  160C  R
02881  1718  8129                XRRS     A1,A2                   CR=0
02882  171A  5002                RF(0)    *+4
02883  171C  207F                HLT                              WRONG RESULT
02884  171E  8240                LD       A2,RANXR1
       1720  160C  R
02885  1722  8240                XR       A2,RESXR1               CR=0
       1724  160E  R
02886  1726  5002                RF(0)    *+4
02887  1728  207F                HLT
02888
```

```
02889                          EJECT
02890                  ********************************************************
02891                  *                                                      *
02892                  *       XR       EXCLUSIVE OR                          *
02893                  *                                                      *
02894                  ********************************************************
02895                  *
02896                  ***
02897                  *       XR       FORMAT T4   (R1) / (M) TO R1
02898                  ***     (TESTED IN ELEMENTARY TEST)
02899                  *
02900                  ***
02901                  *       XR       FORMAT T5   (R1) / (M+(X)) TO R1
02902                  ***
02903                  *
02904  172A  8120             LDKL     A1,/1111
       172C  1111
02905  172E  0208             LDK      A2,8
02906  1730  B148             XR       A1,VALXR2-8,A2          CR=1
       1732  162A  R
02907  1734  5102             RF(1)    *+4
02908  1736  207F             HLT                              WRONG CR
02909  1738  B140             XR       A1,RFSXR6               CR=0
       173A  1618  R
02910  173C  5002             RF(0)    *+4
02911  173E  207F             HLT
02912                  *
02913                  ***
02914                  *       XR       FORMAT T6   (R1) / ((M)) TO R1
02915                  ***
02916                  *
02917  1740  0300             LDK      A3,0
02918  1742  B360             XR*      A3,INDXR1               CR=1
       1744  1606  R
02919  1746  5102             RF(1)    *+4                     WRONG CR
02920  1748  207F             HLT
02921  174A  B340             XR       A3,VALXR1               CR=0
```

```
                 174C  1630  R
02922            174E  5002              RF(0)    *+4
02923            1750  207F              HLT
02924                                *
02925                                ***
02926                                *     XR       FORMAT T7   (R1) / ((M+(X))) TO R1
02927                                ***
02928                                *
02929            1752  8420              LDKL     A4,/1111
                 1754  1111
02930            1756  0506              LDK      A5,6
02931            1758  8474              XR*      A4,INDXR2-6,A5        CR=1
                 175A  1602  R
02932            175C  5102              RF(1)    *+4
02933            175E  207F              HLT                            WRONG CR
02934            1760  8440              XR       A4,VALXR2             CR=0
                 1762  1632  R
02935            1764  5002              RF(0)    *+4
02936            1766  207F              HLT                            WRONG RESULT
02937                                *
02938                                ***
02939                                *     XR       FORMAT T4S  (R1) / (M) TO M
02940                                ***
02941                                *
02942            1768  8520              LDKL     A5,/FFFF
                 176A  FFFF
02943            176C  8541              ST       A5,RANXR1
                 176E  160C  R
02944            1770  8541              XRS      A5,RANXR1             CR=0
                 1772  160C  R
02945            1774  5002              RF(0)    *+4
02946            1776  207F              HLT                            WRONG CR
02947            1778  8640              LD       A6,RANXR1
                 177A  160C  R
02948            177C  8640              XR       A6,RESXR1             CR=0
                 177E  160F  R
02949            1780  5002              RF(0)    *+4
```

```
02950  1782  207F                HLT                          WRONG RESULT
02951                    ***
02952                    *       XR      FORMAT T5S  (R1) / (M+(X)) TO M+(X)
02953                    ***
02954                    *
02955  1784  8620                LDKL    A6,/2222
       1786  2222
02956  1788  8641                ST      A6,RANXR1
       178A  160C  R
02957  178C  8620                LDKL    A6,/4444
       178E  4444
02958  1790  0706                LDK     A7,6
02959  1792  865D                XRS     A6,RANXR1-6,A7       CR=1
       1794  1606  R
02960  1796  5102                RF(1)   *+4
02961  1798  207F                HLT                          WRONG CR
02962  179A  8740                LD      A7,RANXR1
       179C  160C  R
02963  179E  8740                XR      A7,RESXR8            CR=0
       17A0  161C  R
02964  17A2  5002                RF(0)   *+4
02965  17A4  207F                HLT                          WRONG RESULT
02966                    ***
02967                    *       XR      FORMAT T6S  (R1) / ((M)) TO (M)
02968                    ***
02969                    *
02970  17A6  0100                LDK     A1,0
02971  17A8  8141                ST      A1,RANXR1
       17AA  160C  R
02972  17AC  8220                LDKL    A2,/8888
       17AE  8888
02973  17B0  8261                XRS*    A2,INDXR3            CR=2
       17B2  160A  R
02974  17B4  5202                RF(2)   *+4
02975  17B6  207F                HLT                          WRONG CR
02976  17B8  8340                LD      A3,RANXR1
       17BA  160C  R
```

```
02977  17BC  8340          XR      A3,RFSXR9              CR=0
       17BE  161E  R
02978  17C0  5002          RF(0)   *+4
02979  17C2  207F          HLT                            WRONG RESULT
02980                 ***
02981                 *     XR      FORMAT T7S  (R1) / ((M+(X))) TO (M+(X))
02982                 ***
02983                 *
02984  17C4  87A0          LDKL    A15,/1111
       17C6  1111
02985  17C8  87C1          ST      A15,RANXR1
       17CA  160C  R
02986  17CC  0510          LDK     A5,16
02987  17CE  87F5          XRS*    A15,INDXR3-16,A5       CR=0
       17D0  15FA  R
02988  17D2  5002          RF(0)   *+4
02989  17D4  207F          HLT                            WRONG CR
02990  17D6  8540          LD      A5,RANXR1              CR=0
       17D8  160C  R
02991  17DA  5002          RF(0)   *+4
02992  17DC  207F          HLT                            WRONG RESULT
02993
```

```
02994                          EJECT
02995                  ****************************************************
02996                  *                                                  *
02997                  *        TNM       TEST NOT MASK                   *
02998                  *                                                  *
02999                  ****************************************************
03000                  *
03001                  ***
03002                  *        TNM       FORMAT T1   (R1) / (R2) : 0 TO CR
03003                  ***
03004                  *
03005  17DE  8220              LDKL      A2,/2222
       17E0  2222
03006  17E2  8320              LDKL      A3,/2222              CR=1
       17E4  2222
03007  17E6  820D              TNM       A2,A3                 CR=0
03008  17E8  5002              RF(0)     *+4
03009  17EA  207F              HLT                             WRONG CR
03010                  *
03011  17EC  8320              LDKL      A3,/4000
       17EE  4000
03012  17F0  8220              LDKL      A2,0                  CR=0
       17F2  0000
03013  17F4  820D              TNM       A2,A3                 CR=1
03014  17F6  5102              RF(1)     *+4
03015  17F8  207F              HLT                             WRONG CR
03016                  *
03017  17FA  87A0              LDKL      A15,/FF00
       17FC  FF00
03018  17FE  8420              LDKL      A4,/00FF              CR=1
       1800  00FF
03019  1802  841F              TNM       A4,A15                CR=2
03020  1804  5202              RF(2)     *+4
03021  1806  207F              HLT                             WRONG CR
03022  1808  87C0              XR        A15,RESXR4            CR=0
       180A  1614  R
03023  180C  5002              RF(0)     *+4
```

```
03024  180E  207F        HLT                    CHANGED REGISTER
03025  1810  0440        XR       A4,RESXR2     CR=0
       1812  1610  R
03026  1814  501A        RF(0)    SLAT8
03027  1816  207F        HLT                    CHANGED REGISTER
03028
```

```
03029                          EJECT
03030                  ********************************************************
03031                  *                                                      *
03032                  *                  OPERATION   CODE 7                  *
03033                  *                                                      *
03034                  ********************************************************
03035                  *
03036                  *
03037  1818  0000      RSLA1    DATA     0
03038  181A  8000      RSLA2    DATA     /8000
03039  181C  7F80      RSLA3    DATA     /7F80
03040  181E  0AAA      RSRA1    DATA     /0AAA
03041  1820  FFFF      RSRA2    DATA     /FFFF
03042  1822  5550      RSLL1    DATA     /5550
03043  1824  AAAA      RSLL2    DATA     /AAAA
03044  1826  00AA      RSRL1    DATA     /00AA
03045  1828  7658      RSLC1    DATA     /7658
03046  182A  8878      RSLC2    DATA     /8878
03047  182C  7586      RSRC1    DATA     /7586
03048  182E  8F00      RSRC2    DATA     /8F00
03049                  *
03050                  *
03051                  ********************************************************
03052                  *                                                      *
03053                  *        SLA       SINGLE LEFT ARITHMETIC SHIFT      *
03054                  *                                                      *
03055                  ********************************************************
03056                  *
03057         1830     SLAT8    EQU      *
03058  1830  0100               LDK      A1,0
03059  1832  390F               SLA      A1,15                 CR=0
03060  1834  5002               RF(0)    *+4
03061  1836  207F               HLT                            WRONG CR
03062  1838  8140               XR       A1,RSLA1              CR=0
       183A  1818  R
03063  183C  5002               RF(0)    *+4
03064  183E  207F               HLT                            WRONG RESULT
```

```
03065                          *
03066  1840  020F                LDK     A2,/F
03067  1842  3A0F                SLA     A2,15           CR=3
03068  1844  5302                RF(3)   *+4
03069  1846  207F                HLT                     WRONG RESULT
03070  1848  B240                XR      A2,RSLA2        CR=0
       184A  181A  R
03071  184C  5002                RF(0)   *+4
03072  184E  207F                HLT                     WRONG RESULT
03073                          *
03074  1850  03FF                LDK     A3,/FF
03075  1852  3B07                SLA     A3,7            CR=1
03076  1854  5102                RF(1)   *+4
03077  1856  207F                HLT                     WRONG CR
03078  1858  B340                XR      A3,RSLA3        CR=0
       185A  181C  R
03079  185C  5002                RF(0)   *+4
03080  185E  207F                HLT                     WRONG RESULT
03081                          *
03082  1860  8420                LDKL    A4,/FFFF
       1862  FFFF
03083  1864  3C0F                SLA     A4,15           CR=2
03084  1866  5202                RF(2)   *+4
03085  1868  207F                HLT                     WRONG CR
03086  186A  B440                XR      A4,RSLA2        CR=0
       186C  181A  R
03087  186E  5002                RF(0)   *+4
03088  1870  207F                HLT                     WRONG RESULT
03089                          *
03090  1872  8520                LDKL    A5,/AA00        CR=2
       1874  AA00
03091  1876  3D08                SLA     A5,8            CR=3
03092  1878  5302                RF(3)   *+4
03093  187A  207F                HLT                     WRONG CR
03094                          *
03095  187C  01AA                LDK     A1,/AA
03096  187E  8220                LDKL    A2,/FFFF        CR=2
```

```
                1A80  FFFF
03097           1A82  3900          SLA     A1,0              CR=1
03098           1A84  5102          RF(1)   *+4
03099           1A86  207F          HLT                       WRONG CR
03100           1A88  B140          XR      A1,RSRL1          CR=0
                1A8A  1826  R
03101           1A8C  5002          RF(0)   *+4
03102           1A8E  207F          HLT                       WRONG CONTENT A1
03103                         *
03104           1A90  8620          LDKL    A6,/5000          CR=1
                1A92  5000
03105           1A94  3E07          SLA     A6,7              CR=3
03106           1A96  5302          RF(3)   *+4
03107           1A98  207F          HLT                       WRONG CR
03108           1A9A  B640          XR      A6,RSLA1
                1A9C  1818  R
03109           1A9E  5002          RF(0)   *+4
03110           1AA0  207F          HLT                       WRONG RESULT
03111                         *
03112           1AA2  8720          LDKL    A7,/4000          CR=1
                1AA4  4000
03113           1AA6  3F01          SLA     A7,1
03114           1AA8  5302          RF(3)   *+4
03115           1AAA  207F          HLT                       WRONG CR
03116           1AAC  B740          XR      A7,RSLA2
                1AAE  181A  R
03117           1AB0  5002          RF(0)   *+4
03118           1AB2  207F          HLT                       WRONG RESULT
03119
```

```
03120                          EJECT
03121                  ****************************************************
03122                  *                                                  *
03123                  *        SRA     SINGLE RIGHT ARITHMETIC SHIFT     *
03124                  *                                                  *
03125                  ****************************************************
03126                  *
03127  1AB4  0600              LDK     A6,0
03128  1AB6  3E2F              SRA     A6,15                CR=0
03129  1AB8  5002              RF(0)   *+4
03130  1ABA  207F              HLT                          WRONG CR
03131  1ABC  8640              XR      A6,RSLA1             CR=0
       1ABE  1818  R
03132  1AC0  5002              RF(0)   *+4
03133  1AC2  207F              HLT                          WRONG RESULT
03134                  *
03135  1AC4  8720              LDKL    A7,/5555
       1AC6  5555
03136  1AC8  81A0              LDKL    A9,/8000             CR=2
       1ACA  8000
03137  1ACC  3F23              SRA     A7,3                 CR=1
03138  1ACE  5102              RF(1)   *+4
03139  1AD0  207F              HLT                          WRONG RESULT
03140  1AD2  8740              XR      A7,RSRA1             CR=0
       1AD4  181F  R
03141  1AD6  5002              RF(0)   *+4
03142  1AD8  207F              HLT                          WRONG RESULT
03143                  *
03144  1ADA  8120              LDKL    A1,/8000
       1ADC  8000
03145  1ADF  81A0              LDKL    A9,/4000             CR=1
       1AE0  4000
03146  1AE2  392F              SRA     A1,15                CR=2
03147  1AE4  5202              RF(2)   *+4
03148  1AF6  207F              HLT                          WRONG CR
03149  1AE8  8140              XR      A1,RSRA2             CR=0
       1AEA  1820  R
```

```
03150  18EC  5002          RF(0)   *+4
03151  18EE  207F          HLT                     WRONG RESULT
03152                  *
03153  18F0  8120          LDKL    A1,/55          CR=1
       18F2  0055
03154  18F4  392C          SRA     A1,12           CR=0
03155  18F6  5002          RF(0)   *+4
03156  18F8  207F          HLT                     WRONG CR
03157
```

```
03158                          EJECT
03159                  ********************************************************
03160                  *                                                      *
03161                  *        SLL     SINGLE LEFT LOGICAL SHIFT             *
03162                  *                                                      *
03163                  ********************************************************
03164                  *
03165  18FA  8120              LDKL    A1,/FFFF                CR=2
       18FC  FFFF
03166  18FE  3950              SLL     A1,16                   CR=0
03167  1900  5002              RF(0)   *+4
03168  1902  207F              HLT                             WRONG CR
03169  1904  8140              XR      A1,RSLA1                CR=0
       1906  1818  R
03170  1908  5002              RF(0)   *+4
03171  190A  207F              HLT                             WRONG RESULT
03172                  *
03173  190C  8220              LDKL    A2,/F555                CR=2
       190E  F555
03174  1910  3A44              SLL     A2,4                    CR=1
03175  1912  5102              RF(1)   *+4
03176  1914  207F              HLT                             WRONG CR
03177  1916  8240              XR      A2,RSLL1                CR=0
       1918  1822  R
03178  191A  5002              RF(0)   *+4
03179  191C  207F              HLT                             WRONG RESULT
03180                  *
03181  191E  8320              LDKL    A3,/5555                CR=1
       1920  5555
03182  1922  3B41              SLL     A3,1                    CR=2
03183  1924  5202              RF(2)   *+4
03184  1926  207F              HLT                             WRONG CR
03185  1928  8340              XR      A3,RSLL2                CR=0
       192A  1824  R
03186  192C  5002              RF(0)   *+4
03187  192E  207F              HLT                             WRONG RESULT
03188
```

```
03189                          EJECT
03190                  ********************************************************
03191                  *                                                      *
03192                  *       SRL      SINGLE RIGHT LOGICAL SHIFT            *
03193                  *                                                      *
03194                  ********************************************************
03195                  *
03196  1930  8420             LDKL     A4,/FFFF              CR=2
       1932  FFFF
03197  1934  3C70             SRL      A4,16                 CR=0
03198  1936  5002             RF(0)    *+4
03199  1938  207F             HLT                            WRONG CR
03200  193A  8440             XR       A4,RSLA1              CR=0
       193C  1818  R
03201  193E  5002             RF(0)    *+4
03202  1940  207F             HLT                            WRONG RESULT
03203                  *
03204  1942  8520             LDKL     A5,/AAAA              CR=2
       1944  AAAA
03205  1946  3D68             SRL      A5,8                  CR=1
03206  1948  5102             RF(1)    *+4
03207  194A  207F             HLT                            WRONG CR
03208  194C  8540             XR       A5,RSRL1              CR=0
       194E  1826  R
03209  1950  5002             RF(0)    *+4
03210  1952  207F             HLT                            WRONG RESULT
03211                  *
03212  1954  8120             LDKL     A1,/8000
       1956  8000
03213  1958  8220             LDKL     A2,0                  CR=0
       195A  0000
03214  195C  3960             SRL      A1,0                  CR=2
03215  195E  5202             RF(2)    *+4
03216  1960  207F             HLT                            WRONG CR
03217  1962  8140             XR       A1,RSLA2              CR=0
       1964  1814  R
03218  1966  5002             RF(0)    *+4
```

```
03219  1968  207F          HLT                    WRONG RESULT
03220
```

```
03221                          EJECT
03222                  ********************************************************
03223                  *                                                      *
03224                  *       SLC      SINGLE LEFT CIRCULAR SHIFT            *
03225                  *                                                      *
03226                  ********************************************************
03227                  *
03228  196A  8320             LDKL     A3,0
       196C  0000
03229  196E  3800             SLC      A3,16              CR=0
03230  1970  5002             RF(0)    *+4
03231  1972  207F             HLT                         WRONG CR
03232  1974  8340             XR       A3,RSLA1           CR=0
       1976  1818  R
03233  1978  5002             RF(0)    *+4
03234  197A  207F             HLT                         WRONG RESULT
03235                  *
03236  197C  8420             LDKI     A4,/8765           CR=2
       197E  8765
03237  1980  3CC4             SLC      A4,4               CR=1
03238  1982  5102             RF(1)    *+4
03239  1984  207F             HLT                         WRONG CR
03240  1986  8440             XR       A4,RSLC1           CR=0
       1988  1828  R
03241  198A  5002             RF(0)    *+4
03242  198C  207F             HLT                         WRONG RESULT
03243                  *
03244  198E  8520             LDKL     A5,/70F1           CR=1
       1990  70F1
03245  1992  3DCF             SLC      A5,15              CR=2
03246  1994  5202             RF(2)    *+4
03247  1996  207F             HLT                         WRONG CR
03248  1998  8540             XR       A5,RSLC2           CR=0
       199A  182A  R
03249  199C  5002             RF(0)    *+4
03250  199E  207F             HLT                         WRONG RESULT
```

```
03251                          EJECT
03252                  ********************************************************
03253                  *                                                      *
03254                  *       SRC      SINGLE RIGHT CIRCULAR SHIFT           *
03255                  *                                                      *
03256                  ********************************************************
03257                  *
03258  19A0  0600              LDK      A6,0
03259  19A2  8720              LDKL     A7,/F000              CR=2
       19A4  F000
03260  19A6  3EF0              SRC      A6,16                 CR=0
03261  19A8  5002              RF(0)    *+4
03262  19AA  207F              HLT                            WRONG CR
03263  19AC  8640              XR       A6,RSLA1              CR=0
       19AE  1818  R
03264  19B0  5002              RF(0)    *+4
03265  19B2  207F              HLT                            WRONG RESULT
03266                  *
03267  19B4  8120              LDKL     A1,/8675              CR=2
       19B6  8675
03268  19B8  39E8              SRC      A1,8                  CR=1
03269  19BA  5102              RF(1)    *+4
03270  19BC  207F              HLT                            WRONG CR
03271  19BE  8140              XR       A1,RSRC1              CR=0
       19C0  182C  R
03272  19C2  5002              RF(0)    *+4
03273  19C4  207F              HLT                            WRONG RESULT
03274                  *
03275  19C6  8220              LDKL     A2,/7E01              CR=1
       19C8  7E01
03276  19CA  3AE1              SRC      A2,1                  CR=2
03277  19CC  5202              RF(2)    *+4
03278  19CE  207F              HLT                            WRONG CR
03279  19D0  8240              XR       A2,RSRC2              CR=0
       19D2  182E  R
03280  19D4  5002              RF(0)    *+4
03281  19D6  207F              HLT                            WRONG RESULT
```

03282

```
03283                          EJECT
03284                    ******************************************************
03285                    *                                                    *
03286                    *        SLN       SINGLE LEFT AND NORMALIZE SHIFT   *
03287                    *                                                    *
03288                    ******************************************************
03289                    *
03290  19D8  87A0              LDKL      A15,/8000             CR=2
       19DA  8000
03291  19DC  0100              LDK       A1,0
03292  19DE  3988              SLN       A1,A2                 CR NO CHANGE,SHIFTS=16
03293  19E0  5202              RF(2)     *+4
03294  19E2  207F              HLT                             WRONG CR
03295  19E4  8240              XR        A2,RSLN1              CR=0
       19E6  1620  R
03296  19E8  5002              RF(0)     *+4
03297  19EA  207F              HLT                             WRONG RESULT
03298                    *
03299  19EC  8320              LDKL      A3,1                  CR=1
       19EE  0001
03300  19F0  3B90              SLN       A3,A4                 SHIFTS=14
03301  19F2  5102              RF(1)     *+4
03302  19F4  207F              HLT                             WRONG CR
03303  19F6  8440              XR        A4,RSLN2
       19F8  1622  R
03304  19FA  5002              RF(0)     *+4
03305  19FC  207F              HLT                             WRONG NUMBER SHIFT
03306                    *
03307  19FE  8520              LDKL      A5,/8000              CR=2
       1A00  8000
03308  1A02  3D9E              SLN       A5,A15
03309  1A04  5202              RF(2)     *+4
03310  1A06  207F              HLT                             WRONG CR
03311  1A08  87C0              XR        A15,RSLN3             CR=0
       1A0A  1624  R
03312  1A0C  5002              RF(0)     *+4
03313  1A0E  207F              HLT                             WRONG NUMBER SHIFT
```

```
03314                                  *
03315  1A10  8120                      LDKL    A1,/FF00          CR=2
       1A12  FF00
03316  1A14  3988                      SLN     A1,A2
03317  1A16  5202                      RF(2)   *+4
03318  1A18  207F                      HLT                       WRONG CR
03319  1A1A  8240                      XR      A2,RSLN4          CR=0
       1A1C  1626  R
03320  1A1E  5002                      RF(0)   *+4
03321  1A20  207F                      HLT                       WRONG NUMBER SHIFT
03322                                  *
03323  1A22  8320                      LDKL    A3,/FFFF          CR=2
       1A24  FFFF
03324  1A26  3B90                      SLN     A3,A4
03325  1A28  5202                      RF(2)   *+4
03326  1A2A  207F                      HLT                       WRONG CR
03327  1A2C  8440                      XR      A4,RSLN5          CR=0
       1A2E  1628  R
03328  1A30  5002                      RF(0)   *+4
03329  1A32  207F                      HLT                       WRONG NUMBER SHIFT
03330  1A34  8340                      XR      A3,RSLN6          CR=0
       1A36  162A  R
03331  1A38  5002                      RF(0)   *+4
03332  1A3A  207F                      HLT                       WRONG REGISTER CONTENT
03333
```

```
03334                          EJECT
03335                  ********************************************************
03336                  *                                                      *
03337                  *       SRN      SINGLE RIGHT AND NORMALIZE SHIFT      *
03338                  *                                                      *
03339                  ********************************************************
03340                  *
03341  1A3C  8220              LDKL     A2,/8000            CR=2
       1A3E  8000
03342  1A40  0100              LDK      A1,0
03343  1A42  39A8              SRN      A1,A2               CR NO CHANGE,SHIFTS=16
03344  1A44  5202              RF(2)    *+4
03345  1A46  207F              HLT                          WRONG CR
03346  1A48  8240              XR       A2,RSLN1            CR=0
       1A4A  1620  R
03347  1A4C  5002              RF(0)    *+4
03348  1A4E  207F              HLT                          WRONG NUMBER SHIFT
03349                  *
03350  1A50  8320              LDKL     A3,/8000            CR=2
       1A52  8000
03351  1A54  3880              SRN      A3,A4               SHIFTS=15
03352  1A56  5202              RF(2)    *+4
03353  1A58  207F              HLT                          WRONG CR
03354  1A5A  8440              XR       A4,RSLN5            CR=0
       1A5C  1628  R
03355  1A5E  5002              RF(0)    *+4
03356  1A60  207F              HLT                          WRONG NUMBER SHIFT
03357  1A62  8340              XR       A3,RSRN1            CR=0
       1A64  162C  R
03358  1A66  5002              RF(0)    *+4
03359  1A68  207F              HLT                          WRONG REGISTER CONTENT
03360  1A6A  0101              LDK      A1,1
03361  1A6C  8220              LDKL     A2,/FFFF            CR=2
       1A6E  FFFF
03362  1A70  39A8              SRN      A1,A2               SHIFT=0
03363  1A72  5202              RF(2)    *+4
03364  1A74  207F              HLT                          WRONG CR
```

```
03365  1A76  8240          XR      A2,RSLN3        CR=0
       1A78  1624  R
03366  1A7A  5002          RF(0)   *+4
03367  1A7C  207F          HLT                     WRONG NUMBER SHIFT
03368                  *
03369  1A7E  8320          LDKL    A3,/4000        CR=1
       1A80  4000
03370  1A82  3880          SRN     A3,A4           SHIFTS=14
03371  1A84  5102          RF(1)   *+4
03372  1A86  207F          HLT                     WRONG CR
03373  1A88  8440          XR      A4,RSLN2        CR=0
       1A8A  1622  R
03374  1A8C  5002          RF(0)   *+4
03375  1A8E  207F          HLT                     WRONG NUMBER SHIFT
03376  1A90  8340          XR      A3,RSRN2        CR=0
       1A92  162E  R
03377  1A94  8820          ABL(0)  LCKT2
       1A96  182A  R
03378  1A98  207F          HLT                     WRONG REGISTER CONTENT
```

```
03379                       EJECT
03380                  ****************************************************
03381                  *                                                  *
03382                  *                 OPERATION  CODE 12               *
03383                  *                                                  *
03384                  ****************************************************
03385                  *
03386                       RORG    DEB+/1B00
03387                  *
03388  1B00  FFAA     R    RLCRSC  DATA    /FFAA
03389  1B02  1B18    R    INDLC1  DATA    RLCK2
03390  1B04  1B1D    R    INDLC2  DATA    RLCK4+1
03391  1B06  1B0B    R    INDSC1  DATA    RASCR1+1
03392  1B08  1B0A    R    INDSC2  DATA    RASCR1
03393  1B0A  0000         RASCR1  DATA    0
03394  1B0C  5566         RECR1   DATA    /5566
03395  1B0E  AA11         RECR2   DATA    /AA11
03396  1B10  0000         RLC1    DATA    0
03397  1B12  11AA         RLC2    DATA    /11AA
03398  1B14  6655         RLC3    DATA    /6655
03399  1B16  99FF         RLCK1   DATA    /99FF
03400  1B18  AA00         RLCK2   DATA    /AA00
03401  1B1A  FFAA         RLCK3   DATA    /FFAA
03402  1B1C  0055         RLCK4   DATA    /0055
03403  1B1E  00FF         RLCR1   DATA    /00FF
03404  1B20  9900         RLCR2   DATA    /9900
03405  1B22  FF00         RSC1    DATA    /FF00
03406  1B24  FFFF         RSC2    DATA    /FFFF
03407  1B26  7F55         RSC3    DATA    /7F55
03408  1B28  77FF         RSCR1   DATA    /77FF
03409                  *
03410                  ****************************************************
03411                  *                                                  *
03412                  *       LCK       LOAD CHARACTER                   *
03413                  *                                                  *
03414                  ****************************************************
03415                  *
```

```
03416                        *          LCK       FORMAT T2   KL  TO R1   *
03417                        ***                                 L     R
03418                        *
03419  1B2A  8120            LCKT2      LDKL      A1,/9955                CR=2
       1B2C  9955
03420  1B2E  8220                       LDKL      A2,0                    CR=0
       1B30  0000
03421  1B32  E120                       LCK       A1,/FFAA
       1B34  FFAA
03422  1B36  5002                       RF(0)     *+4
03423  1B38  207F                       HLT                               WRONG CR
03424  1B3A  B140                       XR        A1,RLCK1                CR=0
       1B3C  1B16  R
03425  1B3E  5002                       RF(0)     *+4
03426  1B40  207F                       HLT                               WRONG RESULT
03427                        *
03428  1B42  87A0                       LDKL      A15,/AA99               CR=2
       1B44  AA99
03429  1B46  8220                       LDKL      A2,0                    CR=0
       1B48  0000
03430  1B4A  E7A0                       LCK       A15,/00FF
       1B4C  00FF
03431  1B4E  5002                       RF(0)     *+4
03432  1B50  207F                       HLT                               WRONG CR
03433  1B52  B7C0                       XR        A15,RLCK2               CR=0
       1B54  1B18  R
03434  1B56  5002                       RF(0)     *+4
03435  1B58  207F                       HLT                               WRONG RESULT
03436                        *
03437  1B5A  8320                       LDKL      A3,/FFFF                CR=2
       1B5C  FFFF
03438  1B5E  E320                       LCK       A3,/AA00
       1B60  AA00
03439  1B62  5202                       RF(2)     *+4
03440  1B64  207F                       HLT                               WRONG CR
03441  1B66  B340                       XR        A3,RLCK3                CR=0
       1B68  1B1A  R
```

```
03442  1B6A  5002          RF(0)   *+4
03443  1B6C  207F          HLT                     WRONG RESULT
03444                  *
03445  1B6E  8420          LDKL    A4,/00FF        CR=1
       1B70  00FF
03446  1B72  E420          LCK     A4,/5500
       1B74  5500
03447  1B76  5102          RF(1)   *+4
03448  1B78  207F          HLT                     WRONG CR
03449  1B7A  8440          XR      A4,RLCK4        CR=0
       1B7C  1B1C  R
03450  1B7E  5002          RF(0)   *+4
03451  1B80  207F          HLT                     WRONG RESULT
03452
```

```
03453                          EJECT
03454                  ********************************************************
03455                  *                                                      *
03456                  *       LCR      LOAD CHARACTER / REGISTER             *
03457                  *                                                      *
03458                  ********************************************************
03459                  *
03460                  *       LCR      FORMAT T3   ((R2))    TO R1
03461                  ***                                  L/R      R
03462                  *
03463  1B82  8220              LDKL     A2,RLCK3
       1B84  1B1A  R
03464  1B86  8320              LDKL     A3,0                    CR=0
       1B88  0000
03465  1B8A  E328              LCR      A3,A2
03466  1B8C  5002              RF(0)    *+4
03467  1B8F  207F              HLT                              WRONG CR
03468  1B90  8340              XR       A3,RLCR1                CR=0
       1B92  1B1E  R
03469  1B94  5002              RF(0)    *+4
03470  1B96  207F              HLT                              WRONG RESULT
03471                  *
03472  1B98  8420              LDKL     A4,/9999
       1B9A  9999
03473  1B9C  8520              LDKL     A5,RLCK2+1              CR=1
       1B9E  1B19  R
03474  1BA0  E434              LCR      A4,A5
03475  1BA2  5102              RF(1)    *+4
03476  1BA4  207F              HLT                              WRONG CR
03477  1BA6  8440              XR       A4,RLCR2                CR=0
       1BA8  1B20  R
03478  1BAA  5002              RF(0)    *+4
03479  1BAC  207F              HLT                              WRONG RESULT
03480                  *
03481  1BAE  8120              LDKL     A1,/FFAA
       1BB0  FFAA
03482  1BB2  8141              ST       A1,RLCRSC
```

```
         1BP4  1B00  R
03483                      *
03484    1BP6  B620          LDKL     A6,RLCRSC
         1BB8  1B00  R
03485    1BBA  B720          LDKL     A7,0                 CR=0
         1BBC  0000
03486    1BBE  E738          LCR      A7,A6
03487    1BC0  5002          RF(0)    *+4
03488    1BC2  207F          HLT                           WRONG CR
03489    1BC4  E740          XR       A7,RLCR1             CR=0
         1BC6  1B1F  R
03490    1BC8  5002          RF(0)    *+4
03491    1BCA  207F          HLT                           WRONG RESULT
03492                      *
03493    1BCC  B120          LDKL     A1,/1111
         1BCE  1111
03494    1BD0  B220          LDKL     A2,RLCRSC+1          CR=1
         1BD2  1B01  R
03495    1BD4  E128          LCR      A1,A2
03496    1BD6  5102          RF(1)    *+4
03497    1BD8  207F          HLT                           WRONG CR
03498    1BDA  B140          XR       A1,RLC2
         1BDC  1B12  R
03499    1BDE  5002          RF(0)    *+4
03500    1BE0  207F          HLT                           WRONG RESULT
03501
```

```
03502                          EJECT
03503                  ********************************************************
03504                  *                                                      *
03505                  *       LC       LOAD CHARACTER                        *
03506                  *                                                      *
03507                  ********************************************************
03508                  *
03509                  *       LC       FORMAT T4   (M)    TO R1
03510                  ***                                 L/R      R
03511                  *
03512  1BE2  8120              LDKL     A1,0                        CR=0
       1BE4  0000
03513  1BE6  E140              LC       A1,RLCK4
       1BE8  1B1C  R
03514  1BEA  5002              RF(0)    *+4
03515  1BEC  207F              HLT                                  WRONG CR
03516  1BEE  8140              XR       A1,RLC1                     CR=0
       1BF0  1B10  R
03517  1BF2  5002              RF(0)    *+4
03518  1BF4  207F              HLT                                  WRONG RESULT
03519                  *
03520  1BF6  8120              LDKL     A1,0                        CR=0
       1BF8  0000
03521  1BFA  E140              LC       A1,RLCRSC
       1BFC  1B00  R
03522  1BFE  5002              RF(0)    *+4
03523  1C00  207F              HLT                                  WRONG CR
03524  1C02  8140              XR       A1,RLCR1
       1C04  1B1E  R
03525  1C06  5002              RF(0)    *+4
03526  1C08  207F              HLT                                  WRONG RESULT
03527                      *
03528  1C0A  8220              LDKL     A2,/1111                    CR=1
       1C0C  1111
03529  1C0E  E240              LC       A2,RLCRSC+1
       1C10  1B01  R
03530  1C12  5102              RF(1)    *+4
```

```
03531  1C14  207F          HLT                          WRONG CR
03532  1C16  8240          XR       A2,RLC2
       1C18  1812  R
03533  1C1A  5002          RF(0)    *+4
03534  1C1C  207F          HLT                          WRONG RESULT
03535                ***
03536                *       LC       FORMAT T5   (M+(X))    TO R1
03537                ***                                 L/R      R
03538                *
03539  1C1E  0206          LDK      A2,6
03540  1C20  8320          LDKL     A3,/9999            CR=2
       1C22  9999
03541  1C24  E348          LC       A3,RLCR1-5,A2
       1C26  1819  R
03542  1C28  5202          RF(2)    *+4
03543  1C2A  207F          HLT                          WRONG CR
03544  1C2C  8340          XR       A3,RLCK1            CR=0
       1C2E  1816  R
03545  1C30  5002          RF(0)    *+4
03546  1C32  207F          HLT                          WRONG RESULT
03547                ***
03548                *       LC       FORMAT T6   ((M))    TO R1
03549                ***                               L/R      R
03550                *
03551  1C34  8420          LDKL     A4,/1111            CR=1
       1C36  1111
03552  1C38  E460          LC*      A4,INDLC1
       1C3A  1802  R
03553  1C3C  5102          RF(1)    *+4
03554  1C3E  207F          HLT                          WRONG CR
03555  1C40  8440          XR       A4,RLC2             CR=0
       1C42  1812  R
03556  1C44  5002          RF(0)    *+4
03557  1C46  207F          HLT                          WRONG RESULT
03558                ***
03559                *       LC       FORMAT T7   ((M+(X)))    TO R1
03560                ***                                 L/R      R
```

```
03561                                   *
03562  1C48  87A0                      LDKL    A15,/6666               CR=1
       1C4A  6666
03563  1C4C  0602                      LDK     A6,2
03564  1C4E  E7F8                      LC*     A15,INDLC2-2,A6
       1C50  1B02  ,R
03565  1C52  5102                      RF(1)   *+4
03566  1C54  207F                      HLT                             WRONG CR
03567  1C56  87C0                      XR      A15,RLC3                CR=0
       1C58  1B14  R
03568  1C5A  5002                      RF(0)   *+4
03569  1C5C  207F                      HLT                             WRONG RESULT
03570
```

```
03571                          EJECT
03572                    ***************************************************
03573                    *                                                 *
03574                    *       SCR     STORE CHARACTER                   *
03575                    *                                                 *
03576                    ***************************************************
03577                    *
03578                    *       SCR     FORMAT T3   (R1)  TO (R2)
03579                    ***                                 R       L/R
03580                    *
03581  1C5E  81A0                LDKL    A9,/5555
       1C60  5555
03582  1C62  81C1                ST      A9,RASCR1
       1C64  1B0A  R
03583  1C66  81A0                LDKL    A9,RASCR1
       1C68  1B0A  R
03584  1C6A  82A0                LDKL    A10,0                   CR=0
       1C6C  0000
03585  1C6E  E2A7                SCR     A10,A9
03586  1C70  5002                RF(0)   *+4
03587  1C72  207F                HLT                             WRONG CR
03588  1C74  84C0                LD      A12,RASCR1
       1C76  1B0A  R
03589  1C78  84C0                XR      A12,RLCK4               CR=0
       1C7A  1B1C  R
03590  1C7C  5002                RF(0)   *+4
03591  1C7E  207F                HLT                             WRONG RESULT
03592                    *
03593  1C80  87A0                LDKL    A15,0
       1C82  0000
03594  1C84  87C1                ST      A15,RASCR1
       1C86  1B0A  R
03595  1C88  87A0                LDKL    A15,RASCR1+1
       1C8A  1B0B  R
03596  1C8C  86A0                LDKL    A14,/77FF               CR=1
       1C8E  77FF
03597  1C90  E68F                SCR     A14,15
```

```
03598  1C92  5102          RF(1)   *+4
03599  1C94  207F          HLT                          WRONG CR
03600  1C96  85C0          LD      A13,RASCR1
       1C98  180A  R
03601  1C9A  85C0          XR      A13,RLCR1            CR=0
       1C9C  181E  R
03602  1C9E  5002          RF(0)   *+4
03603  1CA0  207F          HLT                          WRONG RESULT
03604  1CA2  86C0          XR      A14,RSCR1            CR=0
       1CA4  1828  R
03605  1CA6  5002          RF(0)   *+4
03606  1CA8  207F          HLT                          WRONG REGISTER (R1)
03607
```

```
03608                          EJECT
03609                    ***************************************************
03610                    *                                                 *
03611                    *       SC        STORE CHARACTER                 *
03612                    *                                                 *
03613                    ***************************************************
03614                    *
03615                    *       SC        FORMAT T4C  (R1)  TO M
03616                    ***                                 R     R/L
03617                    *
03618  1CAA  0100                LDK       A1,0
03619  1CAC  8141                ST        A1,RASCR1
       1CAE  1B0A  R
03620  1CB0  8220                LDKL      A2,/FFFF                CR=2
       1CB2  FFFF
03621  1CB4  E241                SC        A2,RASCR1
       1CB6  1B0A  R
03622  1CB8  5202                RF(2)     *+4
03623  1CBA  207F                HLT                               WRONG CR
03624  1CBC  8340                LD        A3,RASCR1
       1CBE  1B0A  R
03625  1CC0  8340                XR        A3,RSC1                 CR=0
       1CC2  1B22  R
03626  1CC4  5002                RF(0)     *+4
03627  1CC6  207F                HLT                               WRONG STORE
03628  1CC8  8240                XR        A2,RSC2                 CR=0
       1CCA  1B24  R
03629  1CCC  5002                RF(0)     *+4
03630  1CCE  207F                HLT                               WRONG REGISTER
03631                    *
03632  1CD0  0100                LDK       A1,0
03633  1CD2  8141                ST        A1,RLCRSC
       1CD4  1B00  R
03634  1CD6  8220                LDKL      A2,/FFFF                CR=2
       1CD8  FFFF
03635  1CDA  E241                SC        A2,RLCRSC
       1CDC  1B00  R
```

```
03636  1CDE  5202          RF(2)   *+4
03637  1CE0  207F          HLT                     WRONG CR
03638  1CE2  8340          LD      A3,RLCRSC
       1CE4  1B00  R
03639  1CE6  8340          XR      A3,RSC1         CR=0
       1CE8  1B22  R
03640  1CEA  5002          RF(0)   *+4
03641  1CEC  207F          HLT                     WRONG STORE
03642                  *
03643  1CEE  8620          LDKL    A6,/7F55
       1CF0  7F55
03644  1CF2  8720          LDKL    A7,/6666        CR=1
       1CF4  6666
03645  1CF6  8741          ST      A7,RLCRSC
       1CF8  1B00  R
03646  1CFA  E641          SC      A6,RLCRSC+1
       1CFC  1B01  R
03647  1CFE  5102          RF(1)   *+4
03648  1D00  207F          HLT                     WRONG CR
03649  1D02  8540          LD      A5,RLCRSC
       1D04  1B00  R
03650  1D06  8540          XR      A5,RLC3         CR=0
       1D08  1B14  R
03651  1D0A  5002          RF(0)   *+4
03652  1D0C  207F          HLT                     WRONG STORE
03653                  ***
03654                  *       SC      FORMAT T5C  (R1)  TO M+(X)
03655                  ***                             R       R/L
03656                  *
03657  1D0E  0502          LDK     A5,2
03658  1D10  8620          LDKL    A6,/7F55        CR=1
       1D12  7F55
03659  1D14  8720          LDKL    A7,/6666
       1D16  6666
03660  1D18  8741          ST      A7,RASCR1
       1D1A  1B0A  R
03661  1D1C  E655          SC      A6,RASCR1-1,A5
```

```
                1D1F  1809  R
03662           1D20  5102              RF(1)   **+4
03663           1D22  207F              HLT                             WRONG CR
03664           1D24  8740              LD      A7,RASCR1
                1D26  180A  R
03665           1D28  8740              XR      A7,RLC3                 CR=0
                1D2A  1814  R
03666           1D2C  5002              RF(0)   **+4
03667           1D2E  207F              HLT                             WRONG RESULT
03668           1D30  8640              XR      A6,RSC3
                1D32  1826  R
03669           1D34  5002              RF(0)   **+4
03670           1D36  207F              HLT                             WRONG REGISTER
03671                         ***
03672                         *         SC      FORMAT T6C  (R1)  TO (M)
03673                         ***                         R       R/L
03674                         *
03675           1D38  8120              LDKL    A1,/AAAA
                1D3A  AAAA
03676           1D3C  8141              ST      A1,RASCR1
                1D3E  180A  R
03677           1D40  8740              LDKL    A15,0                   CR=0
                1D42  0000
03678           1D44  E7E1              SC*     A15,INDSC1
                1D46  1806  R
03679           1D48  5002              RF(0)   **+4
03680           1D4A  207F              HLT                             WRONG CR
03681           1D4C  8240              LD      A2,RASCR1
                1D4E  180A  R
03682           1D50  8240              XR      A2,RLCK2                CR=0
                1D52  1818  R
03683           1D54  5002              RF(0)   **+4
03684           1D56  207F              HLT                             WRONG RESULT
03685                         ***
03686                         *         SC      FORMAT T7C  (R1)  TO (M+(X))
03687                         ***                         R           R/L
03688                         *
```

```
03689  1058  010A          LDK     A1,10
03690  105A  8340          LDKL    A11,/AAAA
       105C  AAAA
03691  105E  83C1          ST      A11,RASCR1
       1060  1B0A  R
03692  1062  8040          LDKL    A12,/1111           CR=1
       1064  1111
03693  1066  E4E5          SC*     A12,INDSC2-10,A1
       1068  1AFE  R
03694  106A  5102          RF(1)   *+4
03695  106C  207F          HLT                         WRONG CR
03696  106E  82C0          LD      A10,RASCR1
       1070  1B0A  R
03697  1072  82C0          XR      A10,RLC2            CR=0
       1074  1B12  R
03698  1076  5002          RF(0)   *+4
03699  1078  207F          HLT                         WRONG RESULT
03700
```

```
03701                          EJECT
03702                  ***************************************************
03703                  *                                                 *
03704                  *       ECR  EXCHANGE CHARACTER REGISTER/REGISTER  *
03705                  *                                                 *
03706                  ***************************************************
03707                  *
03708                  *       ECR     FORMAT T1   (R2) TO (R1) AND (R2) TO (R1)
03709                  ***                             L       R       R       L
03710                  *
03711  1D7A  0100              LDK     A1,0
03712  1D7C  8220              LDKL    A2,/FFFF                CR=2
       1D7E  FFFF
03713  1D80  E204              ECR     A2,A1
03714  1D82  5202              RF(2)   *+4
03715  1D84  207F              HLT                             WRONG CR
03716  1D86  8240              XR      A2,RLC1                 CR=0
       1D88  1B10  R
03717  1D8A  5002              RF(0)   *+4
03718  1D8C  207F              HLT                             WRONG RESULT
03719                  *
03720  1D8E  0100              LDK     A1,0
03721  1D90  8220              LDKL    A2,/FFFF                CR=2
       1D92  FFFF
03722  1D94  E204              ECR     A2,A1                   THIS LINE HAS BEEN MODIFIED FOR P854/8/9
03723  1D96  5202              RF(2)   *+4
03724  1D98  207F              HLT                             WRONG CR
03725  1D9A  8240              XR      A2,RLC1                 CR=0
       1D9C  1B10  R
03726  1D9E  5002              RF(0)   *+4
03727  1DA0  207F              HLT                             WRONG RESULT
03728                  *
03729  1DA2  8320              LDKL    A3,/FFFF
       1DA4  FFFF
03730  1DA6  8420              LDKL    A4,0                    CR=0
       1DA8  0000
03731  1DAA  E40C              ECR     A4,A3
```

```
03732 1DAC 5002          RF(0)   *+4
03733 1DAE 207F          HLT                     WRONG CR
03734 1DB0 8440          XR      A4,RSC2         CR=0
      1DB2 1B24  R
03735 1DB4 5002          RF(0)   *+4
03736 1DB6 207F          HLT                     WRONG RESULT
03737                *
03738 1DB8 8520          LDKL    A5,/8888
      1DBA 8888
03739 1DBC 8620          LDKL    A6,/5566        CR=1
      1DBE 5566
03740 1DC0 E518          ECR     A5,A6
03741 1DC2 5102          RF(1)   *+4
03742 1DC4 207F          HLT                     WRONG CR
03743 1DC6 8540          XR      A5,RLC3         CR=0
      1DC8 1B14  R
03744 1DCA 5002          RF(0)   *+4
03745 1DCC 207F          HLT                     WRONG CR
03746 1DCE 8640          XR      A6,RECR1
      1DD0 1B0C  R
03747 1DD2 5002          RF(0)   *+4
03748 1DD4 207F          HLT                     WRONG REGISTER
03749                *
03750 1DD6 8720          LDKL    A7,/AA11
      1DD8 AA11
03751 1DDA 87A0          LDKL    A15,/4444       CR=1
      1DDC 4444
03752 1DDE E79C          ECR     A15,A7
03753 1DE0 5102          RF(1)   *+4
03754 1DE2 207F          HLT                     WRONG CR
03755 1DE4 87C0          XR      A15,RLC2        CR=0
      1DE6 1B12  R
03756 1DE8 5002          RF(0)   *+4
03757 1DEA 207F          HLT                     WRONG RESULT
03758 1DEC 8740          XR      A7,RECR2        CR=0
      1DEE 1B0E  R
03759 1DF0 5028          RF(0)   CWKT2
```

03760 1DF2 207F HLT WRONG REGISTER
03761

```
03762                          EJECT
03763                    ********** **********************************
03764                    *                                            *
03765                    *              OPERATION   CODE 13           *
03766                    *                                            *
03767                    **********************************************
03768                    *
03769  1DF4  1E0A  R     INDCC1   DATA    VALCC1
03770  1DF6  1E0F  R     INDCC2   DATA    VALCC3+1
03771  1DF8  1E10  R     INDCW1   DATA    VACW1
03772  1DFA  1E12  R     INDCW2   DATA    VACW2
03773  1DFC  0000        RCWK1    DATA    0
03774  1DFE  FFFF        RCWK2    DATA    /FFFF
03775  1E00  AAAA        RCWK3    DATA    /AAAA
03776  1E02  5555        RCWK4    DATA    /5555
03777  1E04  0055        VACCR1   DATA    /0055
03778  1E06  2288        VACCR2   DATA    /2288
03779  1E08  1144        VACCR3   DATA    /1144
03780  1E0A  0044        VALCC1   DATA    /0044
03781  1E0C  33FF        VALCC2   DATA    /33FF
03782  1E0E  3355        VALCC3   DATA    /3355
03783  1E10  6666        VACW1    DATA    /6666
03784  1E12  9999        VACW2    DATA    /9999
03785  1E14  1FEC  R     VACW3    DATA    TCW+4
03786  1E16  0000        VACWR1   DATA    0
03787  1E18  1111        VACWR2   DATA    /1111
03788                    *
03789                    **********************************************
03790                    *                                            *
03791                    *        CWK       COMPARE WORD WITH CONSTANT *
03792                    *                                            *
03793                    **********************************************
03794                    *
03795                    *        CWK       FORMAT T2   (R1) : KL TO CR
03796                    ***
03797                    *
03798  1E1A  0100        CWKT2    LDK       A1,0
```

```
03799 1F1C 8220          LDKL    A2,/8000          CR=2
      1F1E 8000
03800 1F20 E920          CWK     A1,0              CR=0,EQUAL
      1F22 0000
03801 1F24 5002          RF(0)   *+4
03802 1F26 207F          HLT                       WRONG CR
03803 1F28 8140          XR      A1,RCWK1          CR=0
      1F2A 1DFC  R
03804 1F2C 5002          RF(0)   *+4
03805 1F2E 207F          HLT                       WRONG REGISTER
03806                    *
03807 1F30 8220          LDKL    A2,/FFFF          CR=2
      1F32 FFFF
03808 1F34 EA20          CWK     A2,/FFFF          CR=0,EQUAL
      1F36 FFFF
03809 1F38 5002          RF(0)   *+4
03810 1F3A 207F          HLT                       WRONG CR
03811 1F3C 8240          XR      A2,RCWK2          CR=0
      1F3F 1DFE  R
03812 1F40 5002          RF(0)   *+4
03813 1F42 207F          HLT                       WRONG REGISTER
03814                    *
03815 1F44 8320          LDKL    A3,/AAAA          CR=2
      1F46 AAAA
03816 1F48 EB20          CWK     A3,/AAAA          CR=0,EQUAL
      1F4A AAAA
03817 1F4C 5002          RF(0)   *+4
03818 1F4E 207F          HLT                       WRONG CR
03819 1F50 8340          XR      A3,RCWK3          CR=0
      1F52 1E00  R
03820 1F54 5002          RF(0)   *+4
03821 1F56 207F          HLT                       WRONG REGISTER
03822                    *
03823 1F58 8420          LDKL    A4,/5555          CR=1
      1F5A 5555
03824 1F5C EC20          CWK     A4,/5555          CR=0,EQUAL
      1F5E 5555
```

```
03A25  1F60  5002          RF(0)   *+4
03A26  1F62  207F          HLT                     WRONG CR
03A27  1F64  B440          XR      A4,RCHK4
       1F66  1E02  R
03A28  1F68  5002          RF(0)   *+4
03A29  1F6A  207F          HLT                     WRONG REGISTER
03A30                *
03A31  1F6C  8520          LDKL    A5,/5555
       1F6E  5555
03A32  1F70  ED20          CWK     A5,0            CR=1
       1F72  0000
03A33  1F74  5102          RF(1)   *+4
03A34  1F76  207F          HLT                     WRONG CR
03A35                *
03A36  1F78  8620          LDKL    A6,/5555
       1F7A  5555
03A37  1F7C  EF20          CWK     A6,/F0F0        CR=1
       1F7E  F0F0
03A38  1F80  5102          RF(1)   *+4
03A39  1F82  207F          HLT                     WRONG CR
03A40                *
03A41  1F84  8720          LDKL    A7,/5555
       1F86  5555
03A42  1F88  EF20          CWK     A7,/2222        CR=1
       1F8A  2222
03A43  1F8C  5102          RF(1)   *+4
03A44  1F8E  207F          HLT                     WRONG CR
03A45                *
03A46  1F90  81A0          LDKL    A9,/2AAA
       1F92  2AAA
03A47  1F94  E9A0          CWK     A9,/1555        CR=1
       1F96  1555
03A48  1F98  5102          RF(1)   *+4
03A49  1F9A  207F          HLT                     WRONG CR
03A50                *
03A51  1F9C  82A0          LDKL    A10,/FFFF
       1F9E  FFFF
```

```
03852  1FA0  83A0          LDKL    A11,0                CR=0
       1FA2  0000
03853  1FA4  EAA0          CWK     A10,0                CR=2
       1FA6  0000
03854  1FA8  5202          RF(2)   *+4
03855  1FAA  207F          HLT                          WRONG CR
03856                *
03857  1FAC  87A0          LDKL    A15,/8000
       1FAE  8000
03858  1FB0  86A0          LDKL    A12,0                CR=0
       1FB2  0000
03859  1FB4  EFA0          CWK     A15,/FFFF            CR=2
       1FB6  FFFF
03860  1FB8  5202          RF(2)   *+4
03861  1FBA  207F          HLT                          WRONG CR
03862                *
03863  1FBC  85A0          LDKL    A13,/FFFF
       1FBE  FFFF
03864  1FC0  86A0          LDKL    A14,0                CR=0
       1FC2  0000
03865  1FC4  EDA0          CWK     A13,/7FFF            CR=2
       1FC6  7FFF
03866  1FC8  5202          RF(2)   *+4
03867  1FCA  207F          HLT                          WRONG CR
03868                *
03869  1FCC  8120          LDKL    A1,/8000             CR=2
       1FCE  8000
03870  1FD0  E820    TCWK  CWK     0,TCWK+4             CR=0,TEST A0
       1FD2  1ED4  R
03871  1FD4  5002          RF(0)   *+4
03872  1FD6  207F          HLT                          WRONG CR
03873
```

```
03874                       EJECT
03875                  ****************************************************
03876                  *                                                  *
03877                  *       CWR       COMPARE WORD REGISTER / REGISTER *
03878                  *                                                  *
03879                  ****************************************************
03880                  *
03881                  *       CWR       FORMAT T1    (R1) ? (R2) TO CR
03882                  ***
03883                  *
03884  1FD8  0100               LDK       A1,0
03885  1FDA  0200               LDK       A2,0
03886  1FDC  8320               LDKL      A3,/8000              CR=2
       1FDE  8000
03887  1FE0  E908               CWR       A1,A2                 CR=0,EQUAL
03888  1FE2  5002               RF(0)     *+4
03889  1FE4  207F               HLT                             WRONG CR
03890  1FE6  E920               CWK       A1,0                  CR=0
       1FE8  0000
03891  1FEA  5002               RF(0)     *+4
03892  1FEC  207F               HLT                             R1 CHANGED
03893  1FEE  EA20               CWK       A2,0                  CR=0
       1FF0  0000
03894  1FF2  5002               RF(0)     *+4
03895  1FF4  207F               HLT                             R2 CHANGED
03896                  *
03897  1FF6  0100               LDK       A1,0
03898  1FF8  0200               LDK       A2,0
03899  1FFA  8620               LDKL      A6,/8000
       1FFC  8000
03900  1FFE  E909               DATA      /E909                 CWR,A1/A2,CR=0,K15=1
03901  1F00  5002               RF(0)     *+4
03902  1F02  207F               HLT                             WRONG CR
03903  1F04  E920               CWK       A1,0                  CR=0
       1F06  0000
03904  1F08  5002               RF(0)     *+4
03905  1F0A  207F               HLT                             R1 CHANGED
```

```
03906                    *
03907  1F0C  8320        LDKL    A3,/FFFF
       1F0E  FFFF
03908  1F10  8420        LDKL    A4,/FFFF          CR=2
       1F12  FFFF
03909  1F14  EB10        CWR     A3,A4             CR=0,EQUAL
03910  1F16  5002        RF(0)   *+4
03911  1F18  207F        HLT                       WRONG CR
03912  1F1A  EC20        CWK     A3,/FFFF          CR=0
       1F1C  FFFF
03913  1F1E  5002        RF(0)   *+4
03914  1F20  207F        HLT                       R1 CHANGED
03915  1F22  EC20        CWK     A4,/FFFF          CR=0
       1F24  FFFF
03916  1F26  5002        RF(0)   *+4
03917  1F28  207F        HLT                       R2 CHANGED
03918                    *
03919  1F2A  8520        LDKL    A5,/70F0
       1F2C  70F0
03920  1F2E  8620        LDKL    A6,/FFFF          CR=2
       1F30  FFFF
03921  1F32  ED18        CWR     A5,A6             CR=1
03922  1F34  5102        RF(1)   *+4
03923  1F36  207F        HLT                       WRONG CR
03924                    *
03925  1F38  8720        LDKL    A7,/5555
       1F3A  5555
03926  1F3C  8140        LDKL    A9,/5554
       1F3E  5554
03927  1F40  82A0        LDKL    A10,0             CR=0
       1F42  0000
03928  1F44  EF06        CWR     A7,A9             CR=1
03929  1F46  5102        RF(1)   *+4
03930  1F48  207F        HLT                       WRONG CR
03931                    *
03932  1F4A  82A0        LDKL    A10,0
       1F4C  0000
```

```
03933  1F4E  83A0          LDKL    A11,/FFFF           CR=2
       1F50  FFFF
03934  1F52  EABE          CWR     A10,A11             CR=1
03935  1F54  5102          RF(1)   *+4
03936  1F56  207F          HLT                         WRONG CR
03937                *
03938  1F58  87A0          LDKL    A15,/FFFF
       1F5A  FFFF
03939  1F5C  86A0          LDKL    A14,0               CR=0
       1F5E  0000
03940  1F60  EF9A          CWR     A15,A14             CR=2
03941  1F62  5202          RF(2)   *+4
03942  1F64  207F          HLT                         WRONG CR
03943                *
03944  1F66  01FF          LDK     A1,/FF
03945  1F68  8220          LDKL    A2,/7FFF            CR=1
       1F6A  7FFF
03946  1F6C  E908          CWR     A1,A2               CR=2
03947  1F6F  5202          RF(2)   *+4
03948  1F70  207F          HLT                         WRONG CR
03949                *
03950  1F72  8320          LDKL    A3,/FF00
       1F74  FF00
03951  1F76  8420          LDKL    A4,/F0F0
       1F78  F0F0
03952  1F7A  8520          LDKL    A5,0                CR=0
       1F7C  0000
03953  1F7E  EC14          CWR     A4,A5               CR=2
03954  1F80  5202          RF(2)   *+4
03955  1F82  207F          HLT                         WRONG CR
03956                *
03957  1F84  8220          LDKL    A2,TCWR+2           CR=1
       1F86  1F8A  R
03958  1F88  E808    TCWR  CWR     0,A2                CR=0,TEST A0
03959  1F8A  5002          RF(0)   *+4
03960  1F8C  207F          HLT                         WRONG CR
03961                *
```

```
03962  1F8F  8120          LDKL    A1,DATCWR
       1F90  1F98  R
03963  1F92  8220          LDKL    A2,/4000          CR=1
       1F94  4000
03964  1F96  E805          DATA    /E805             CWR,A0/A1,CR=0,K15=1
03965        1F98    DATCWR EQU    *
03966  1F98  5002          RF(0)   *+4
03967  1F9A  207F          HLT                       WRONG CR
03968                ***
03969                *      CWR     FORMAT T3   (R1) : ((R2)) TO CR
03970                ***
03971                *
03972  1F9C  0100          LDK     A1,0
03973  1F9E  8220          LDKL    A2,VACWR1         CR=1
       1FA0  1E16  R
03974  1FA2  E928          CWR*    A1,A2             CR=0
03975  1FA4  5002          RF(0)   *+4
03976  1FA6  207F          HLT                       WRONG CR
03977                *
03978  1FA8  8320          LDKL    A3,/2222
       1FAA  2222
03979  1FAC  8420          LDKL    A4,VACWR2         CR=1
       1FAE  1E18  R
03980  1FB0  EB30          CWR*    A3,A4             CR=1
03981  1FB2  5102          RF(1)   *+4
03982  1FB4  207F          HLT                       WRONG CR
03983  1FB6  8540          LD      A5,VACWR2
       1FB8  1E18  R
03984  1FBA  ED20          CWK     A5,/1111          CR=0
       1FBC  1111
03985  1FBE  5002          RF(0)   *+4
03986  1FC0  207F          HLT                       ((R2)) CHANGED
03987  1FC2  EB20          CWK     A3,/2222          CR=0
       1FC4  2222
03988  1FC6  5002          RF(0)   *+4
03989  1FC8  207F          HLT                       (R1) CHANGED
03990                *
```

```
03991  1FCA  8620          LDKL    A6,/F0F0
       1FCC  F0F0
03992  1FCE  8720          LDKL    A7,VACWR2          CR=1
       1FD0  1E18  R
03993  1FD2  EE3C          CWR*    A6,A7              CR=2
03994  1FD4  5202          RF(2)   *+4
03995  1FD6  207F          HLT                        WRONG CR
03996
```

```
03997                           EJECT
03998                   ********************************************************
03999                   *                                                      *
04000                   *       CW      COMPARE WORD                           *
04001                   *                                                      *
04002                   ********************************************************
04003                   *
04004                   *       CW      FORMAT T4   (R1) : (M) TO CR
04005                   ***
04006                   *
04007  1FD8  81A0               LDKL    A9,/6666                CR=1
       1FDA  6666
04008  1FDC  E9C0               CW      A9,VACW1                CR=0
       1FDE  1E10  R
04009  1FE0  5002               RF(0)   *+4
04010  1FE2  207F               HLT                             WRONG CR
04011                   *
04012  1FE4  8320               LDKL    A3,/8000                CR=2
       1FE6  8000
04013  1FE8  E840       TCW     CW      0,VACW3                 CR=0,TEST A0
       1FEA  1E14  R
04014  1FEC  5002               RF(0)   *+4
04015  1FEE  207F               HLT                             WRONG CR
04016                   ***
04017                   *       CW      FORMAT T5   (R1) : (M+(X)) TO CR
04018                   ***
04019                   *
04020  1FF0  82A0               LDKL    A10,/66
       1FF2  0066
04021  1FF4  83A0               LDKL    A11,8
       1FF6  0008
04022  1FF8  EACE               CW      A10,VACW2-8,A11         CR=1
       1FFA  1E0A  R
04023  1FFC  5102               RF(1)   *+4
04024  1FFE  207F               HLT                             WRONG CR
04025  2000  84C0               LD      A12,VACW2
       2002  1E12  R
```

```
04026  2004  ECA0                CWK     A12,/9999           CR=0
       2006  9999
04027  2008  5002                RF(0)   *+4
04028  200A  207F                HLT                         (M) CHANGED
04029                    ***
04030                    *       CW      FORMAT T6   (R1) : ((M)) TO CR
04031                    ***
04032                    *
04033  200C  87A0                LDKL    A15,/1111
       200E  1111
04034  2010  EFF0                CW*     A15,INDCW1          CR=2
       2012  1DF8  R
04035  2014  5202                RF(2)   *+4
04036  2016  207F                HLT                         WRONG CR
04037                    ***
04038                    *       CW      FORMA  T7   (R1) : ((M+(X))) TO CR
04039                    ***
04040                    *
04041  2018  85A0                LDKL    A13,/8000
       201A  8000
04042  201C  0106                LDK     A1,6
04043  201E  EDF4                CW*     A13,INDCW2-6,A1     CR=2
       2020  1DF4  R
04044  2022  5202                RF(2)   *+4
04045  2024  207F                HLT                         WRONG CR
04046
```

```
04047                          EJECT
04048                  ****************************************************
04049                  *                                                  *
04050                  *       CCK      COMPARE CHARACTER WITH CONSTANT   *
04051                  *                                                  *
04052                  ****************************************************
04053                  *
04054                  *       CCK      FORMAT T2   (R1)  : KL  TO CR
04055                  ***                                 R     L
04056                  *
04057  2026  8120               LDKL     A1,/FF00                CR=2
       2028  FF00
04058  202A  E921               CCK      A1,/00FF                CR=0
       202C  00FF
04059  202E  5002               RF(0)    *+4
04060  2030  207F               HLT                              WRONG CR
04061  2032  E920               CWK      A1,/FF00                CR=0
       2034  FF00
04062  2036  5002               RF(0)    *+4
04063  2038  207F               HLT                              (R1) CHANGED
04064                  *
04065  203A  8220               LDKL     A2,/00FF                CR=1
       203C  00FF
04066  203E  EA21               CCK      A2,/FF00                CR=0
       2040  FF00
04067  2042  5002               RF(0)    *+4
04068  2044  207F               HLT                              WRONG CR
04069                  *
04070  2046  8320               LDKL     A3,/1104                CR=1
       2048  1104
04071  204A  EB21               CCK      A3,/0333                CR=1
       204C  0333
04072  204E  5102               RF(1)    *+4
04073  2050  207F               HLT                              WRONG CR
04074                  *
04075  2052  87A0               LDKL     A15,/4411               CR=1
       2054  4411
```

2084
1C
2068

```
04076  2056  EFA1        CCK     A15,/6622        CR=2
       2058  6622
04077  205A  5202        RF(2)   *+4
04078  205C  207F        HLT                      WRONG RESULT
04079
```

```
04080                          EJECT
04081                  ***************************************************
04082                  *                                                 *
04083                  *       CCR     COMPARE CHARACTER / REGISTER      *
04084                  *                                                 *
04085                  ***************************************************
04086                  *
04087                  *       CCR     FORMAT T3   (R1)  : ((R2))  TO CR
04088                  ***                                 R       L/R
04089                  *
04090  205E  8120             LDKL    A1,/AA00
       2060  AA00
04091  2062  8220             LDKL    A2,VACCR1               CR=1
       2064  1E04  R
04092  2066  E929             CCR     A1,A2                   CR=0
04093  2068  5002             RF(0)   *+4
04094  206A  207F             HLT                             WRONG CR
04095  206C  E920             CWK     A1,/AA00                CR=0
       206E  AA00
04096  2070  5002             RF(0)   *+4
04097  2072  207F             HLT                             (R1) CHANGED
04098  2074  8240             LD      A2,VACCR1
       2076  1E04  R
04099                                                          CR=1
04100  2078  EA20             CWK     A2,/0055                CR=0
       207A  0055
04101  207C  5002             RF(0)   *+4
04102  207E  207F             HLT                             ((R2)) CHANGED
04103                  *
04104  2080  8220             LDKL    A2,VACCR2
       2082  1E06  R
04105  2084  8320             LDKL    A3,/1144
       2086  1144
04106  2088  EB29             CCR     A3,A2                   CR=1
04107  208A  5102             RF(1)   *+4
04108  208C  207F             HLT                             WRONG CR
04109                  *
```

2084 !

```
04110  208E  8420          LDKL    A4,VACCR3+1          CR=1
       2090  1E09  R
04111  2092  87A0          LDKL    A15,/33
       2094  0033
04112  2096  EFB1          CCR     A15,A4               CR=2
04113  2098  5202          RF(2)   *+4
04114  209A  207F          HLT                          WRONG CR
04115
```

```
04116                          EJECT
04117                  ****************************************************
04118                  *                                                  *
04119                  *       CC       COMPARE CHARACTER                 *
04120                  *                                                  *
04121                  ****************************************************
04122                  *
04123                  *       CC       FORMAT T4   (R1) : (M)   TO CR
04124                  ***                             R     L/R
04125                  *
04126  209C  8620             LDKL     A6,/8800              CR=2
       209E  8800
04127  20A0  EE41             CC       A6,VALCC1             CR=0
       20A2  1F0A  R
04128  20A4  5002             RF(0)    *+4
04129  20A6  207F             HLT                            WRONG CR
04130  20A8  EE20             CWK      A6,/8800              CR=0
       20AA  8E00
04131  20AC  5002             RF(0)    *+4
04132  20AE  207F             HLT                            (R1) CHANGED
04133  20B0  8540             LD       A5,VALCC1
       20B2  1E0A  R
04134  20B4  ED20             CWK      A5,/0044              CR=0
       20B6  0044
04135  20B8  5002             RF(0)    *+4
04136  20BA  207F             HLT                            (M) CHANGED
04137                  ***
04138                  *       CC       FORMAT T5   (R1) : (M+(X))  TO CR
04139                  ***                             R       L/R
04140                  *
04141  20BC  81A0             LDKL     A9,5
       20BE  0005
04142  20C0  82A0             LDKL     A10,/FF
       20C2  00FF
04143  20C4  EAC7             CC       A10,VALCC2-4,A9       CR=0
       20C6  1E08  R
04144  20C8  5002             RF(0)    *+4
```

```
04145  20CA  207F          HLT                          WRONG CR
04146                ***
04147                *      CC       FORMAT T6   (R1) : ((M))   TO CR
04148                ***                              R      L/R
04149                *
04150  20CC  83A0          LDKL     A11,/11
       20CE  0011
04151  20D0  EBE1          CC*      A11,INDCC1          CR=1
       20D2  1DF4  R
04152  20D4  5102          RF(1)    *+4
04153  20D6  207F          HLT                          WRONG CR
```

```
04154                          EJECT
04155                    ***
04156                    *     CC        FORMAT T7   (R1) : ((M+(X))) TO CR
04157                    ***                             R         L/R
04158                    *
04159  20D8  0106               LDK       A1,6
04160  20DA  87A0               LDKL      A15,/6644              CR=1
       20DC  6644
04161  20DE  EFF5               CC*       A15,INDCC2-6,A1        CR=2
       20E0  1DF0  R
04162  20E2  8A20               ABL(2)    CFT2
       20E4  2262  R
04163  20E6  207F               HLT                              WRONG CR
```

```
04164                          EJECT
04165                  ****************************************************
04166                  *                                                  *
04167                  *                  OPERATION  CODE 14              *
04168                  *                                                  *
04169                  ****************************************************
04170                  *
04171  20E8  8140      TOCF1   LD      A1,STACK
       20EA  0180
04172  20EC  8220              LDKL    A2,RTCF1
       20EE  226C  R
04173  20F0  E908              CWR     A1,A2           CR=0
04174  20F2  5002              RF(0)   *+4
04175  20F4  207F              HLT                     WRONG RETURN ADRESS
04176  20F6  8120              LDKL    A1,STACK-4
       20F8  017C
04177  20FA  E91E              CWR     A1,A15          CR=0
04178  20FC  5002              RF(0)   *+4
04179  20FF  207F              HLT                     WRONG POINTER
04180  2100  F03E              RTN     A15
04181                  *
04182  2102  86A0      TOCF1A  LDKL    A14,/8000       CR=2
       2104  8000
04183  2106  5202              RF(2)   *+4
04184  2108  207F              HLT                     WRONG CR
04185  210A  F03E              RTN     A15
04186                  *
04187  210C  82A0      TOCF2   LDKL    A10,/4000       CR=1
       210E  4000
04188  2110  5102              RF(1)   *+4
04189  2112  207F              HLT                     WRONG CR
04190  2114  F03A              RTN     A14
04191                  *
04192  2116  83A0      TOCFR1  LDKL    A11,/8000       CR=2
       2118  8000
04193  211A  F036              RTN     A13
04194                  *
```

```
04195          211C        TCFR2   EQU     *
04196  211C    82A0                LDKL    A10,TCFR2A          CR=1
       211E    2128  R
04197  2120    F08B                CFR     A12,10
04198  2122    5102        RTCFR3  RF(1)   *+4
04199  2124    207F                HLT                         WRONG CR
04200  2126    F032                RTN     A12
04201                      *
04202  2128    81A0        TCFR2A  LDKL    A9,TCFR2B
       212A    2138  R
04203  212C    8720                LDKL    A7,/8000            CR=2
       212E    8000
04204  2130    F487                CFR     A12,A9
04205  2132    5202        RTCFR4  RF(2)   *+4
04206  2134    207F                HLT                         WRONG CR
04207  2136    F032                RTN     A12
04208                      *
04209  2138    8720        TCFR2B  LDKL    A7,TCFR2C           CR=1
       213A    2144  R
04210  213C    F49D                CFR     A12,A7
04211  213E    5102        RTCFR5  RF(1)   *+4
04212  2140    207F                HLT
04213  2142    F032                RTN     A12
04214                      *
04215  2144    8620        TCFR2C  LDKL    A6,RTCFR2           CR=1
       2146    230C  R
04216  2148    EE40                CW      A6,STACK            CR=0
       214A    0180
04217  214C    5002                RF(0)   *+4
04218  214C    207F                HLT                         WRONG RETURN ADDRESS
04219  2150    8620                LDKL    A6,RTCFR3           CR=1
       2152    2122  R
04220  2154    EE40                CW      A6,STACK-4          CR=0
       2156    017C
04221  2158    5002                RF(0)   *+4
04222  215A    207F                HLT                         WRONG RETURN ADDRESS
04223  215C    8620                LDKL    A6,RTCFR4           CR=1
```

```
                2158  2132  R
04224           2160  EE40        CW      A6,STACK-8          CR=0
                2162  0178
04225           2164  5002        RF(0)   *+4
04226           2166  207F        HLT                         WRONG RETURN ADDRESS
04227           2168  8620        LDKL    A6,RTCFR5           CR=1
                216A  213E  R
04228           216C  EE40        CW      A6,STACK-12         CR=0
                216E  0174
04229           2170  5002        RF(0)   *+4
04230           2172  207F        HLT                         WRONG RETURN ADDRESS
04231           2174  8620        LDKL    A6,STACK-16         CR=1
                2176  0170
04232           2178  EC98        CWR     A12,A6              CR=0
04233           217A  5002        RF(0)   *+4
04234           217C  207F        HLT                         WRONG POINTER
04235           217E  F032        RTN     A12
04236                             *
04237           2180  85A0  TCFR3 LDKL    A13,0               CR=0
                2182  0000
04238           2184  F03E        RTN     A15
04239                             *
04240           2186  2180  R INDCFR DATA  TCFR3
04241                             *
04242           2188  82C0  TCFI1 LD      A10,STACK
                218A  0180
04243           218C  81A0        LDKL    A9,RTCFI1
                218E  2328  R
04244           2190  EA86        CWR     A10,A9              CR=0
04245           2192  5002        RF(0)   *+4
04246           2194  207F        HLT                         WRONG RETURN ADDRESS
04247           2196  F02E        RTN     A11
04248                             *
04249           2198  8720  TCFI2 LDKL    A7,/8000            CR=2
                219A  8000
04250           219C  F02A        RTN     A10
04251                             *
```

```
04252  21AE  8720      TCFI3   LDKL    A7,/8000            CR=2
       21A0  8000
04253  21A2  F026              RTN     A9
04254                    *
04255  21A4  219E  R    INCFI3  DATA    TCFI3
04256                    *
04257  21A6  8120      TCFI4   LDKL    A1,/17C             CR=1
       21A8  017C
04258  21AA  83A0              LDKL    A11,/8000           CR=2
       21AC  8000
04259  21AE  F141              CFI     A1,ROUT05
       21B0  2260  R
04260  21B2  5202              RF(2)   *+4
04261  21B4  207F              HLT                         WRONG CR
04262  21B6  F022              RTN     A8
04263                    *
04264  21B8  8220      TCFI4A  LDKL    A2,/178             CR=1
       21BA  0178
04265  21BC  84A0              LDKL    A12,TCFI4B          CR=1
       21BE  21C8  R
04266  21C0  F213              CFR     A2,A12
04267  21C2  5102              RF(1)   *+4
04268  21C4  207F              HLT                         WRONG CR
04269  21C6  F024              RTN.    A1
04270                    *
04271  21C8  8320      TCFI4B  LDKL    A3,/174
       21CA  0174
04272  21CC  85A0              LDKL    A13,0               CR=0
       21CE  0000
04273  21D0  F321              CF      A3,TCFI4C
       21D2  21DA  R
04274  21D4  5002              RF(0)   *+4
04275  21D6  207F              HLT                         WRONG CR
04276  21D8  F028              RTN     A2
04277                    *
04278  21DA  86A0      TCFI4C  LDKL    A14,TCFI4D          CR=1
       21DC  21EA  R
```

```
04279  21DE  8420        LDKL    A4,/170
       21E0  0170
04280  21E2  F418        CFR     A4,A14
04281  21E4  5102        RF(1)   *+4
04282  21E6  207F        HLT                          WRONG CR
04283  21E8  F02C        RTN     A3
04284                *
04285  21EA  87A0  TCFI4D LDKL    A15,TCFI4E
       21EC  21F6  R
04286  21EE  8520        LDKL    A5,/16C              CR=1
       21F0  016C
04287  21F2  F51F        CFR     A5,A15
04288  21F4  F030        RTN     A4
04289                *
04290  21F6  85A0  TCFI4E LDKL    A13,TCFI4F
       21F8  2202  R
04291  21FA  8620        LDKL    A6,/168              CR=1
       21FC  0168
04292  21FE  F617        CFR     A6,A13
04293  2200  F034        RTN     A5
04294                *
04295  2202  8240  TCFI4F LDKL    A10,TCFI4G
       2204  220E  R
04296  2206  8720        LDKL    A7,/164              CR=1
       2208  0164
04297  220A  F70B        CFR     A7,A10
04298  220C  F038        RTN     A6
04299                *
04300  220E  81A0  TCFI4G LDKL    A9,0                 CR=0
       2210  0000
04301  2212  F03C        RTN     A7
04302                *
04303  2214  21A6  R  INCFI4 DATA    TCFI4
04304                *
04305        2216  TABEX   EQU     *
04306  2216  210F        ANK     A1,/F
04307  2218  3104        XRK     A1,4
```

```
04308  221A  0107          LDK     A1,7
04309  221C  1108          ADK     A1,8
04310  221E  1910          SUK     A1,16
04311  2220  3941          SLL     A1,1
04312  2222  3901          SLA     A1,1
04313  2224  39CE          SLC     A1,14
04314  2226  39ED          SRC     A1,13
04315  2228  3962          SRL     A1,2
04316                *
04317        222A    TABEX1  EQU     *
04318  222A  2226  R        DATA    TABEX+16
04319  222C  2228  R        DATA    TABEX+18
04320                *
04321        222E    TABEX2  EQU     *
04322  222E  8108          LDR     A1,A2
04323  2230  9108          ADR     A1,A2
04324  2232  8129          STR     A1,A2
04325  2234  9029          IMR     A2
04326  2236  9908          SUR     A1,A2
04327  2238  E908          CWR     A1,A2
04328  223A  F908          CIR     A1,A2
04329  223C  9909          NGR     A1,A2
04330  223E  9829          C2R     A2
04331  2240  A029          CMR     A2
04332  2242  A108          ANR     A1,A2
04333  2244  A908          ORR     A1,A2
04334  2246  B108          XRR     A1,A2
04335  2248  A109          TM      A1,A2
04336  224A  B109          TNM     A1,A2
04337  224C  E108          ECR     A1,A2
04338  224E  F128          LCR     A1,A2
04339  2250  E129          SCR     A1,A2
04340  2252  F929          CCR     A1,A2
04341  2254  8F08          ABR     A2
04342  2256  207F          HLT
04343                *
04344  2258  2188  R ROUT01  DATA    TCFI1
```

```
04345  225A  2198  R   ROUT02   DATA     TCFI2
04346  225C  21A4  R   ROUT03   DATA     INCFI3
04347  225E  2214  R   ROUT04   DATA     INCFI4
04348  2260  2188  R   ROUT05   DATA     TCFI4A
04349
```

```
04350                          EJECT
04351                    ******************************************************
04352                    *                                                    *
04353                    *       CF       CALL FUNCTION                       *
04354                    *                                                    *
04355                    *       RTN      RETURN                              *
04356                    *                                                    *
04357                    ******************************************************
04358                    *
04359                    *       CF       FORMAT T2   (P)   TO (R1),(R1)-2 TO R1
04360                    *                            (PSW) TO (R1),(R1)-2 TO R1
04361                    *                            KL    TO P
04362                    *
04363          2262      CFT2     EQU      *
04364  2262    20BF               INH
04365  2264    87A0               LDKL     A15,STACK            STACK POINTER,CR=1
       2266    0180
04366  2268    F7A1               CF       A15,TOCF1
       226A    20F8  R
04367  226C    5102     RTCF1     RF(1)    *+4
04368  226E    207F               HLT                           WRONG CR
04369  2270    8340               LD       A3,STACK             CR=1
       2272    0180
04370  2274    8420               LDKL     A4,RTCF1
       2276    226C  R
04371  2278    EB10               CWR      A3,A4                CR=0
04372  227A    5002               RF(0)    *+4
04373  227C    207F               HLT                           WRONG CF
04374  227E    EFA0               CWK      A15,/180             CR=0
       2280    0180
04375  2282    5002               RF(0)    *+4
04376  2284    207F               HLT                           WRONG CONTENT A15
04377  2286    85C0               LD       A13,STACK-2
       2288    017E
04378  228A    A5A0               ANKL     A13,/40              CR=0
       228C    0040
04379  228E    5002               RF(0)    *+4                  INH STATE OK
```

```
04380  22?0  207F          HLT                        WRONG STATE
04381                  *
04382  22?2  2840          ENB
04383  22?4  F7A1          CF      A15,TOCF1A         CR=0
       22?6  2102  R
04384  22?8  5002          RF(0)   *+4
04385  22?A  207F          HLT                        WRONG CR
04386  22?C  85C0          LD      A13,STACK-2
       22?E  017E
04387  22?0  A5A0          ANKL    A13,/40            CR=1
       22?2  0040
04388  22?4  5102          RF(1)   *+4                ENB STATE-OK
04389  22?6  207F          HLT                        WRONG STATE
04390                  *
04391  22?8  86A0          LDKL    A14,STACK
       22?A  0180
04392  22?C  8120          LDKL    A1,/8000           CR=2
       22?E  8000
04393  22?0  F6A1          CF      A14,TOCF2
       22?2  210C  R
04394  22?4  5202          RF(2)   *+4
04395  22?6  207F          HLT                        WRONG CR
04396  22?8  F6A1          CF      A14,TOCF2
       22?A  210C  R
04397  22?C  85C0          LD      A13,STACK-2
       22?E  017E
04398  22?0  A5A0          ANKL    A13,/40            CR=1
       22?2  0040
04399  22?4  5102          RF(1)   *+4                ENB-STATE-OK
04400  22?6  207F          HLT                        WRONG STATE
04401                  *
04402  22?8  20BF          INH
04403  22?A  85A0          LDKL    A13,0              CR=0
       22?C  0000
04404  22?E  F6A1          CF      A14,TOCF2
       22?0  210C  R
04405  22?2  5002          RF(0)   *+4
```

```
04406  22D4  207F          HLT                          WRONG CR
04407  22D6  F6A1          CF      A14,TOCF2
       22D8  210C  R
04408  22DA  85C0          LD      A13,STACK-2
       22DC  017E
04409  22DE  A5A0          ANKL    A13,/40              CR=0
       22E0  0040
04410  22E2  5002          RF(0)   *+4                  INH-STATE-OK
04411  22E4  207F          HLT                          WRONG STATE
04412
```

```
04a13                          EJECT
04a14                  ***************************************************
04a15                  *                                                 *
04a16                  *       CFR     CALL FUNCTION / REGISTER          *
04a17                  *                                                 *
04a18                  ***************************************************
04a19                  *
04a20                  *       CFR     FORMAT T1   (P)   TO (R1),(R1)-2 TO R1
04a21                  ***                (PSW) TO (R1),(R1)-2 TO R1
04a22                  *                  (R2)  TO P
04a23                  *
04a24  22E6 85A0               LDKL    A13,STACK
       22E8 0180
04a25  22EA 84A0               LDKL    A12,TOCFR1          CR=1
       22EC 2116 R
04a26  22EE F593               CFR     A13,A12
04a27  22F0 5102               RF(1)   *+4
04a28  22F2 207F               HLT                         WRONG CR
04a29  22F4 83A0               LDKL    A11,TOCFR1
       22F6 2116 R
04a30  22F8 EC8F               CWR     A12,A11             CR=0
04a31  22FA 5002               RF(0)   *+4
04a32  22FC 207F               HLT                         (R2) CHANGED
04a33                  *
04a34  22FE 84A0               LDKL    A12,STACK
       2300 0180
04a35  2302 83A0               LDKL    A11,TCFR2
       2304 211C R
04a36  2306 82A0               LDKL    A10,0               CR=0
       2308 0000
04a37  230A F48F               CFR     A12,A11
04a38  230C 5002       RTCFR2  RF(0)   *+4
04a39  230E 207F               HLT                         WRONG CR
04a40                  *
04a41                  ***
04a42                  *       CFR     FORMAT T3   (P)   TO (R1),(R1)-2 TO R1
04a43                  ***                (PSW) TO (R1),(R1)-2 TO R1
```

```
04444                          *
04445                          *                          ((R2)) TO P
04446  2310  87A0               LDKL    A15,STACK
       2312  0180
04447  2314  86A0               LDKL    A14,INDCFR              CR=1
       2316  2186  R
04448  2318  F7BB               CFR*    A15,A14
04449  231A  5102               RF(1)   *+4
04450  231C  207F               HLT                             WRONG CR
04451  231E  20BF               INH
04452
```

```
04453                          EJECT
04454                  ****************************************************
04455                  *                                                  *
04456                  *       CFI     CALL FUNCTION                      *
04457                  *                                                  *
04458                  ****************************************************
04459                  *
04460                  *       CFI     FORMAT T4
04461                  ***                             (P)   TO (R1),(R1)-2 TO R1
04462                  *                               (PSW) TO (R1),(R1)-2 TO R1
04463                  *                               (M)   TO P
04464                  *
04465  2320  83A0               LDKL    A11,STACK               CR=1
       2322  0180
04466  2324  F3C1               CFI     A11,ROUT01
       2326  2258  R
04467  2328  5102       RTCFI1  RF(1)   *+4
04468  232A  207F               HLT                             WRONG CR
04469                  ***
04470                  *       CFI     FORMAT T5   (P)    TO (R1),(R1)-2 TO R1
04471                  ***                         (PSW)  TO (R1),(R1)-2 TO R1
04472                  *                           (M+(X))TO P
04473  232C  81A0               LDKL    A9,6
       232E  0006
04474  2330  82A0               LDKL    A10,STACK               CR=1
       2332  0180
04475  2334  F2C7               CFI     A10,ROUT02-6,A9
       2336  2254  R
04476  2338  5102               RF(1)   *+4
04477  233A  207F               HLT
04478                  ***
04479                  *       CFI     FORMAT T6   (P)   TO (R1),(R1)-2 TO R1
04480                  ***                         (PSW) TO (R1),(R1)-2 TO R1
04481                  *                           ((M)) TO P
04482  233C  81A0               LDKL    A9,STACK
       233E  0180
04483  2340  82A0               LDKL    A10,0                   CR=0
```

```
        2342  0000
04484   2344  F1E1          CFI*    A9,ROUT03
        2346  225C  R
04485   2348  5002          RF(0)   *+4
04486   234A  207F          HLT                          WRONG CR
04487                 ***
04488                 *     CFI     FORMAT T7   (P)      TO (R1),(R1)-2 TO R1
04489                 ***                       (PSW)    TO (R1),(R1)-2 TO R1
04490                 *                         ((M+(X)))TO P
04491   234C  82A0          LDKL    A10,8
        234E  0008
04492   2350  80A0          LDKL    A8,STACK             CR=1
        2352  0180
04493   2354  F0EB          CFI*    A8,ROUT04-8,A10
        2356  2256  R
04494   2358  5102          RF(1)   *+4
04495   235A  207F          HLT
04496
```

```
04497                          EJECT
04498                  ***************************************************
04499                  *                                                 *
04500                  *       EXK     EXECUTE CONSTANT                  *
04501                  *                                                 *
04502                  ***************************************************
04503                  *
04504                  *       EXK     FORMAT T2   KL IS EXECUTED
04505                  ***             TEST WITH SHORT CONSTANT INSTRUCTION IN K00
04506                  *
04507  235C  0300             LDK     A3,0
04508  235E  874C             LD      A7,TABEX,A3         STORE INSTRUCTION IN SECOND WORD
       2360  2216  R
04509  2362  8741             ST      A7,EXK1+2
       2364  236A  R
04510  2366  0106             LDK     A1,6
04511  2368  F021     EXK1    EXK     /207F               EXECUTE AND CONSTANT WITH A1 REG.
       236A  207F
04512  236C  5102             RF(1)   *+4                 TEST CR AFTER EXECUTE AND
04513  236E  207F             HLT                         WRONG CR
04514  2370  E920             CWK     A1,6                TEST A1 VALUE
       2372  0006
04515  2374  5002             RF(0)   *+4
04516  2376  207F             HLT                         WRONG VALUE
04517                  *
04518  2378  0302             LDK     A3,2
04519  237A  874C             LD      A7,TABEX,A3
       237C  2216  R
04520  237E  8741             ST      A7,EXK2+2           STORE INSTRUCTION IN SECOND WORD
       2380  2388  R
04521  2382  8220             LDKL    A2,-1               SET CR=2
       2384  FFFF
04522  2386  F021     EXK2    EXK     /207F               EXECUTE XRK CONSTANT WITH A1 REG.
       2388  207F
04523  238A  5102             RF(1)   *+4                 TEST CR AFTER EXECUTE XRK
04524  238C  207F             HLT                         WRONG CR
04525  238E  E920             CWK     A1,2                TEST A1 VALUE
```

```
        2390  0002
04526   2392  5002          RF(0)   *+4
04527   2394  207F          HLT                     WRONG VALUE
04528
```

```
04529                          EJECT
04530                    ****************************************************
04531                    *                                                  *
04532                    *        EXR       EXECUTE REGISTER                *
04533                    *                                                  *
04534                    ****************************************************
04535                    *
04536                    *        EXR       FORMAT T1   (R2) IS EXECUTED
04537                    ***
04538                    *
04539  2396  0304               LDK       A3,4
04540  2398  874C               LD        A7,TABEX,A3
       239A  2216  R
04541  239C  8120               LDKL      A1,0                    SET CR=0
       239E  0000
04542  23A0  F01D               EXR       A7                      EXECUTE  LOAD CONSTANT
04543  23A2  5002               RF(0)     *+4                     TEST CR AFTER LDK
04544  23A4  207F               HLT                               WRONG CR
04545  23A6  E920               CWK       A1,7                    TEST A1 VALUE AFTER EXECUTE
       23A8  0007
04546  23AA  5002               RF(0)     *+4
04547  23AC  207F               HLT                               WRONG VALUE
04548                    *
04549  23AE  0306               LDK       A3,6
04550  23B0  874C               LD        A7,TABEX,A3
       23B2  2216  R
04551  23B4  8220               LDKL      A2,-1                   SET CR=2
       23B6  FFFF
04552  23B8  F01D               EXR       A7                      EXECUTE ADD CONSTANT
04553  23BA  5102               RF(1)     *+4                     TEST CR AFTER ADD
04554  23BC  207F               HLT                               WRONG CR
04555  23BE  E920               CWK       A1,15                   TEST A1 VALUE AFTER EXECUTE
       23C0  000F
04556  23C2  5002               RF(0)     *+4
04557  23C4  207F               HLT                               WRONG VALUE
04558                    *
04559  23C6  0308               LDK       A3,8
```

```
04560  23C8  874C          LD      A7,TABFX,A3          CR=1
       23CA  2216  R
04561  23CC  F01D          EXR     A7                   EXECUTE SUB CONSTANT
04562  23CE  5202          RF(2)   *+4
04563  23D0  207F          HLT                          WRONG CR
04564  23D2  E920          CWK     A1,-1
       23D4  FFFF
04565  23D6  5002          RF(0)   *+4
04566  23D8  207F          HLT                          WRONG VALUE
04567                ***
04568                *      EXR     FORMAT 13S  ((R2)) IS EXECUTED
04569                ***
04570                *
04571  23DA  030A          LDK     A3,10
04572  23DC  8720          LDKL    A7,TABFX+10          LOAD ADDRESS OF THE INSTRUCTION
       23DE  2220  R
04573  23E0  0101          LDK     A1,1
04574  23E2  F030          EXR*    A7                   EXECUTE SINGLE LEFT LOGICAL SHIFT
04575  23E4  5102          RF(1)   *+4
04576  23E6  207F          HLT                          WRONG CR
04577  23E8  E920          CWK     A1,2                 TEST A1 VALUE
       23EA  0002
04578  23EC  5002          RF(0)   *+4
04579  23EE  207F          HLT                          WRONG VALUE
04580
```

```
04581                          EJECT
04582                  ****************************************************
04583                  *                                                  *
04584                  *       EX       EXECUTE                           *
04585                  *                                                  *
04586                  ****************************************************
04587                  *
04588                  *       EX       FORMAT T4S  (M) IS EXECUTED
04589                  ***
04590                  *
04591  23F0  030C              LDK      A3,12
04592  23F2  F041              EX*      TABEX+12              EXECUTE SINGLE LEFT ARITHMETIC SHIFT
       23F4  2222  R
04593  23F6  5102              RF(1)    *+4
04594  23F8  207F              HLT                            WRONG CR
04595  23FA  E920              CWK      A1,4                  TEST A1 VALUE
       23FC  0004
04596  23FE  5002              RF(0)    *+4
04597  2400  207F              HLT                            WRONG VALUE
04598                  ***
04599                  *       EX       FORMAT T5S  (M+(X)) IS EXECUTED
04600                  ***
04601                  *
04602  2402  030E              LDK      A3,14
04603  2404  F04D              EX       TABEX,A3              EXECUTE SINGLE LEFT CIRCULAR SHIFT
       2406  2216  R
04604  2408  5102              RF(1)    *+4
04605  240A  207F              HLT                            WRONG CR
04606  240C  E920              CWK      A1,1                  TEST A1 VALUE
       240E  0001
04607  2410  5002              RF(0)    *+4
04608  2412  207F              HLT                            WRONG VALUE
04609                  ***
04610                  *       EX       FORMAT T6S  ((M)) IS EXECUTED
04611                  ***
04612                  *
04613  2414  0310              LDK      A3,16
```

```
04614  2016  F061          EX*     TAREX1              EXECUTE SINGLE RIGHT CIRCULAR SHIFT
       2018  222A  R
04615  201A  5102          RF(1)   *+4
04616  201C  207F          HLT
04617  201E  E920          CWK     A1,8                TEST A1 VALUE
       2020  0008
04618  2022  5002          RF(0)   *+4
04619  2024  207F          HLT                         WRONG VALUE
04620                 *A
04621                 *     EX      FORMAT T7S  ((M+(X))) IS EXECUTED
04622                 ***
04623                 *
04624  2026  0312          LDK     A3,18
04625  2028  0402          LDK     A4,2
04626  202A  F071          EX*     TAREX1,A4           EXECUTE SINGLE RIGHT LOGICAL SHIFT
       202C  222A  R
04627  202F  5102          RF(1)   *+4
04628  2030  207F          HLT                         WRONG CR
04629  2032  E920          CWK     A1,2                TEST A1 VALUE
       2034  0002
04630  2036  5002          RF(0)   *+4
04631  2038  207F          HLT                         WRONG VALUE
04632  203A  8F20          ABL(7)  C1RT1
       203C  2450  R
04633
```

```
04634                          EJECT
04635                    ******************************************************
04636                    *                                                    *
04637                    *                  OPERATION  CODE 15                *
04638                    *                                                    *
04639                    ******************************************************
04640                    *
04641  243E  0000        RANC1R   DATA     0
04642  2440  0000        VAC1R    DATA     0
04643  2442  FFFF        VALC1A   DATA     /FFFF
04644  2444  8888        VALC1B   DATA     /8888
04645  2446  4242        VALC1C   DATA     /4242
04646  2448  1414        VALC1D   DATA     /1414
04647  244A  2446  R     INDC11   DATA     VALC1C
04648  244C  2448  R     INDC12   DATA     VALC1D
04649  244E  243E  R     INDC13   DATA     RANC1R
04650                    *
04651                    ******************************************************
04652                    *                                                    *
04653                    *        C1R       ONE'S COMPLEMENT REG. / REGISTER  *
04654                    *                                                    *
04655                    ******************************************************
04656                    *                                 ----
04657                    *        C1R       FORMAT T1     (R2) TO R1
04658                    ***
04659                    *
04660  2450  8220        C1RT1    LDKL     A2,/FFFF                CR=2
       2452  FFFF
04661  2454  F908               C1R      A1,A2                   CR=0
04662  2456  5002               RF(0)    *+4
04663  2458  207F               HLT                              WRONG CR
04664  245A  E920               CWK      A1,0                    CR=0
       245C  0000
04665  245E  5002               RF(0)    *+4
04666  2460  207F               HLT                              WRONG RESULT
04667                    *
04668  2462  8220               LDKL     A2,/FFFF                CR=2
```

```
                2A64  FFFF
04669           2A66  F909            DATA    /F909               C1R ,A1/A2,CR=0,K15=1
04670           2A68  5002            RF(0)   *+4
04671           2A6A  207F            HLT                         WRONG CR
04672           2A6C  E920            CWK     A1,0
                2A6E  0000
04673           2A70  5002            RF(0)   *+4
04674           2A72  207F            HLT                         WRONG RESULT
04675                           *
04676           2A74  8420            LDKL    A4,/5555            CR=1
                2A76  5555
04677           2A78  FB10            C1R     A3,A4               CR=2
04678           2A7A  5202            RF(2)   *+4
04679           2A7C  207F            HLT                         WRONG CR
04680           2A7E  EB20            CWK     A3,/AAAA            CR=0
                2A80  AAAA
04681           2A82  5002            RF(0)   *+4
04682           2A84  207F            HLT                         WRONG RESULT
04683                           *
04684           2A86  8620            LDKL    A6,/AAAA            CR=2
                2A88  AAAA
04685           2A8A  FD18            C1R     A5,A6               CR=1
04686           2A8C  5102            RF(1)   *+4
04687           2A8F  207F            HLT                         WRONG CR
04688           2A90  ED20            CWK     A5,/5555            CR=0
                2A92  5555
04689           2A94  5002            RF(0)   *+4
04690           2A96  207F            HLT                         WRONG RESULT
04691           2A98  EE20            CWK     A6,/AAAA
                2A9A  AAAA
04692           2A9C  5002            RF(0)   *+4
04693           2A9E  207F            HLT                         (R2) CHANGED
04694                       ***                     ------
04695                       *       C1R     FORMAT T3   ((R2)) TO R1
04696                       ***
04697                       *
04698           2AA0  8720            LDKL    A7,VAC1R            CR=1
```

```
                24A2  2440  R
04699           24A4  F98C              C1R*    A9,A7               CR=2
04700           24A6  5202              RF(2)   *+4
04701           24A8  207F              HLT                         WRONG CR
04702           24AA  E9A0              CWK     A9,/FFFF            CR=0
                24AC  FFFF
04703           24AE  5002              RF(0)   *+4
04704           24B0  207F              HLT                         WRONG VALUE
04705                                 *
04706                                 ***                 ------
04707                                 *       C1R     FORMAT T3S  ((R2)) TO (R2)
04708                                 ***
04709                                 *
04710           24B2  83A0              LDKL    A11,/1111           YES
                24B4  1111
04711           24B6  83C1              ST      A11,RANC1R
                24B8  243E  R
04712           24BA  87A0              LDKL    A15,RANC1R          CR = 1
                24BC  243F  R
04713           24BE  F83F              C1RS    A15                 CR = 2
04714           24C0  5202              RF(2)   *+4
04715           24C2  207F              HLT                         WRONG CR
04716           24C4  85C0              LD      A13,RANC1R
                24C6  243E  R
04717           24C8  EDA0              CWK     A13,/EEEF           CR=0
                24CA  EEEF
04718           24CC  5002              RF(0)   *+4
04719           24CE  207F              HLT                         WRONG VALUE
04720           24D0  5700              RF(7)   C1T4
04721
```

```
04722                          EJECT
04723                  ********************************************************
04724                  *                                                      *
04725                  *       C1       ONE'S COMPLEMENT                      *
04726                  *                                                      *
04727                  ********************************************************
04728                  *                                  ---
04729                  *       C1       FORMAT T4   (M) TO R1
04730                  ***
04731                  *
04732        24D2      C1T4     EQU      *
04733  24D2  8120              LDKL     A1,-1                 CR=2
       24D4  FFFF
04734  24D6  EA40              C1       A2,VALC1A             CR=0
       24D8  2442  R
04735  24DA  5002              RF(0)    *+4
04736  24DC  207F              HLT                            WRONG CR
04737  24DE  EA20              CWK      A2,0
       24E0  0000
04738  24E2  5002              RF(0)    *+4
04739  24E4  207F              HLT                            WRONG VALUE
04740  24E6  8140              LD       A1,VALC1A             CR=2
       24E8  2442  R
04741  24EA  E920              CWK      A1,/FFFF              CR=0
       24EC  FFFF
04742  24EE  5002              RF(0)    *+4
04743  24F0  207F              HLT                            (M) CHANGED
04744                  ***                          -------
04745                  *       C1       FORMAT T5   (M+(X)) TO R1
04746                  ***
04747                  *
04748  24F2  0304              LDK      A3,4
04749  24F4  EC4C              C1       A4,VALC1B-4,A3        CR=1
       24F6  2440  R
04750  24F8  5102              RF(1)    *+4
04751  24FA  207F              HLT                            WRONG CR
04752  24FC  EC20              CWK      A4,/7777              CR=0
```

```
        24FE  7777
04753   2500  5002                RF(0)   *+4
04754   2502  207F                HLT                             WRONG VALUE
04755                     ***               -----
04756                     *       C1      FORMAT T6   ((M)) TO R1
04757                     ***
04758                     *
04759   2504  ED60                C1*     A5,INDC11               CR=2
        2506  244A  R
04760   2508  5202                RF(2)   *+4
04761   250A  207F                HLT                             WRONG RESULT CR
04762   250C  ED20                CWK     A5,/BDBD                CR=0
        250E  BDBD
04763   2510  5002                RF(0)   *+4
04764   2512  207F                HLT                             WRONG RESULT
04765                     ***               ---------
04766                     *       C1      FORMAT T7   ((M+(X))) TO R1
04767                     ***
04768                     *
04769   2514  0108                LDK     A1,8
04770   2516  FFE4                C1*     A15,INDC12-8,A1         CR=2
        2518  2444  R
04771   251A  5202                RF(2)   *+4
04772   251C  207F                HLT                             WRONG RESULT CR
04773   251E  EFA0                CWK     A15,/EBEB               CR=0
        2520  EBEB
04774   2522  5002                RF(0)   *+4
04775   2524  207F                HLT                             WRONG RESULT
04776                     ***               ---
04777                     *       C1      FORMAT T4S  (M) TO M
04778                     ***
04779                     *
04780   2526  8720                LDKL    A7,/2222                CR=1
        2528  2222
04781   252A  8741                ST      A7,RANC1R
        252C  243E  R
04782   252E  F841                C1S     RANC1R                  CR = 2
```

```
        2530  243E  R
04783   2532  5202              RF(2)     *+4
04784   2534  207F              HLT                           WRONG CR
04785   2536  82A0              LDKL      A10,/DDDD           CR=2
        2538  DDDD
04786   253A  EAC0              CW        A10,RANC1R          CR=0
        253C  243E  R
04787   253E  5002              RF(0)     *+4
04788   2540  207F              HLT                           WRONG RESULT
04789                   ***               -------
04790                   *       C1        FORMAT T5S  (M+(X)) TO M+(X)
04791                   ***
04792                   *
04793   2542  0206              LDK       A2,6
04794   2544  83A0              LDKL      A11,/CCCC           CR=2
        2546  CCCC
04795   2548  83C1              ST        A11,RANC1R
        254A  243E  R
04796   254C  F849              C1S       RANC1R-6,A2         CR=1
        254E  2438  R
04797   2550  5102              RF(1)     *+4
04798   2552  207F              HLT                           WRONG CR
04799   2554  85A0              LDKL      A13,/3333
        2556  3333
04800   2558  EDC0              CW        A13,RANC1R          CR=0
        255A  243E  R
04801   255C  5002              RF(0)     *+4
04802   255E  207F              HLT                           WRONG RESULT
04803                   ***               -----
04804                   *       C1        FORMAT T6S  ((M)) TO (M)
04805                   ***
04806                   *
04807   2560  86A0              LDKL      A14,/FFFF
        2562  FFFF
04808   2564  86C1              ST        A14,RANC1R          CR=2
        2566  243E  R
04809   2568  F861              C1S*      INDC13              CR=0
```

```
        256A  244F  R
04E10   256C  5002                RF(0)   *+4
04E11   256E  207F                HLT                             WRONG CR
04E12   2570  8140                LD      A1,RANC1R               CR=0
        2572  243E  R
04E13   2574  5002                RF(0)   *+4
04E14   2576  207F                HLT                             WRONG VALUE
04E15                     ***                 ---------
04E16                     *       C1        FORMAT T7S  ((M+(X))) TO (M+(X))
04E17                     ***
04E18                     *
04E19   2578  0102                LDK     A1,2
04E20   257A  8220                LDKL    A2,0                    CR=0
        257C  0000
04E21   257E  8241                ST      A2,RANC1R
        2580  243E  R
04E22   2582  F865                C1S*    INDC13-2,A1             CR=2
        2584  244C  R
04E23   2586  5202                RF(2)   *+4
04E24   2588  207F                HLT                             WRONG CR
04E25   258A  8420                LDKL    A4,-1                   CR=2
        258C  FFFF
04E26   258E  EC40                CW      A4,RANC1R               CR=0
        2590  243E  R
04E27   2592  5004                RF(0)   REXE
04E28   2594  207F                HLT                             WRONG VALUE
04E29
```

```
04830                          EJECT
04831                  ******************************************************
04832                  *                                                    *
04833                  *                  OPERATION   CODE 14               *
04834                  *                                                    *
04835                  ******************************************************
04836                  *
04837                  *       TEST EXECUTE WITH INSTRUCTIONS IN K00 FORMAT
04838                  ***
04839                  *
04840                  *
04841                  *
04842  2596  0000      EXCMR   DATA    0
04843                  *
04844       2598       REXE    EQU     *
04845  2598 8140              LD      A1,HLTRAP
       259A 0246  R
04846  259C 8141              ST      A1,WTRAP
       259E 007F
04847  25A0 87A0              LDKL    A15,/180
       25A2 0180
04848                  *
04849  25A4 0204              LDK     A2,4                    OPC=0 , T1
04850  25A6 0300              LDK     A3,0
04851  25A8 844C              LD      A4,TABEX2,A3            LOAD INSTRUCTION IN A4 REGISTER
       25AA 222E  R
04852  25AC F011              EXR     A4                      EXECUTE LOAD REGISTER / REGISTER
04853  25AE F920              CWK     A1,4                    CR=0
       25B0 0004
04854  25B2 5002              RF(0)   *+4
04855  25B4 207F              HLT                             WRONG EXECUTION
04856                  *
04857  25B6 0326              LDK     A3,38                   OPC=1,T1
04858  25B8 8220              LDKL    A2,AFTER                CR=1
       25BA 25C2  R
04859  25BC F04D              EX      TABEX2,A3               EXECUTE ABSOLUTE CONDITIONNAL BRANCH
       25BE 222E  R
```

```
04860  25C0  207F          HLT                    WRONG EXECUTION
04861        25C2    AFTER  EQU     *
04862  25C2  0312          LDK     A3,1A          OPC=2 , T3S
04863  25C4  8220          LDKL    A2,/FFFF       CR=2
       25C6  FFFF
04864  25C8  8241          ST      A2,EXCMR
       25CA  2596  R
04865  25CC  8220          LDKL    A2,EXCMR       CR=1
       25CE  2596  R
04866  25D0  F04D          EX      TABEX2,A3      EXECUTE CLEAR MEMORY/REGISTER
       25D2  222E  R
04867  25D4  8540          LD      A5,EXCMR       CR=0
       25D6  2596  R
04868  25D8  5002          RF(0)   *+4
04869  25DA  207F          HLT                    WRONG EXECUTION
04870                *
04871  25DC  0310          LDK     A3,16          OPC=3 , T3
04872  25DE  8220          LDKL    A2,EXCMR
       25E0  2596  R
04873  25E2  8420          LDKL    A4,/AAAA       CR=2
       25E4  AAAA
04874  25E6  8441          ST      A4,EXCMR
       25E8  2596  R
04875  25EA  F04D          EX      TABFX2,A3      EXECUTE TWO'S COMPLEMENT REGISTER
       25EC  222E  R
04876  25EE  5102          RF(1)   *+4
04877  25F0  207F          HLT                    WRONG EXECUTION
04878  25F2  8540          LD      A5,EXCMR
       25F4  2596  R
04879  25F6  ED20          CWK     A5,/5556       CR=0
       25F8  5556
04880  25FA  5002          RF(0)   *+4
04881  25FC  207F          HLT                    WRONG RESULT
04882                *
04883  25FE  031A          LDK     A3,26          OPC=4 , T1
04884  2600  0100          LDK     A1,0
04885  2602  8220          LDKL    A2,/FFFF       CR=2
```

```
                2604  FFFF
04886           2606  F04D          EX      TABEX2,A3       EXECUTE TEST MASK
                2608  222E  R
04887           260A  5002          RF(0)   *+4
04888           260C  207F          HLT                     WRONG EXECUTION
04889                       *
04890           260E  0316          LDK     A3,22           OPC=5 , T1
04891           2610  0100          LDK     A1,0
04892           2612  8220          LDKL    A2,/FFFF
                2614  FFFF
04893           2616  F04D          EX      TABEX2,A3       EXECUTE OR REGISTER / REGISTER
                2618  222E  R
04894           261A  5202          RF(2)   *+4
04895           261C  207F          HLT                     WRONG EXECUTION
04896           261E  E920          CWK     A1,/FFFF        CR=0
                2620  FFFF
04897           2622  5002          RF(0)   *+4
04898           2624  207F          HLT                     WRONG RESULT
04899                       *
04900           2626  031C          LDK     A3,28           OPC=6 , T1
04901           2628  8120          LDKL    A1,/8000
                262A  8000
04902           262C  8220          LDKL    A2,/8000        CR=2
                262E  8000
04903           2630  F04D          EX      TABEX2,A3       EXECUTE TEST NOT MASK
                2632  222E  R
04904           2634  5002          RF(0)   *+4
04905           2636  207F          HLT                     WRONG EXECUTION
04906                       *
04907           2638  0320          LDK     A3,32           OPC=12 , T3
04908           263A  8420          LDKL    A4,/FF00
                263C  FF00
04909           263E  8441          ST      A4,EXCMR
                2640  2596  R
04910           2642  0100          LDK     A1,0
04911           2644  8220          LDKL    A2,EXCMR        CR=1
                2646  2596  R
```

```
04912  2648  F04D          EX      TAREX2,A3          EXECUTE LOAD CHARACTER / REGISTER
       264A  222E  R
04913  264C  5102          RF(1)   *+4
04914  264E  207F          HLT                        WRONG EXECUTION
04915  2650  E920          CWK     A1,/00FF           CR=0
       2652  00FF
04916  2654  5002          RF(0)   *+4
04917  2656  207F          HLT                        WRONG RESULT
04918                  *
04919  2658  030C          LDK     A3,12              OPC=15 , T1
04920  265A  8220          LDKL    A2,/EEEE           CR=2
       265C  EEEE
04921  265E  F04D          EX      TAREX2,A3          EXECUTE ONE'S COMPLEMENT REG./REGISTER
       2660  222E  R
04922  2662  5102          RF(1)   *+4
04923  2664  207F          HLT                        WRONG EXECUTION
04924  2666  E920          CWK     A1,/1111           CR=0
       2668  1111
04925  266A  5060          RF(0)   HLKT2
04926  266C  207F          HLT                        WRONG RESULT
04927
```

```
04928                          EJECT
04929                  ****************************************************
04930                  *                                                  *
04931                  *                  OPERATION  CODE 7               *
04932                  *                                                  *
04933                  ****************************************************
04934                  *
04935                  *
04936  266F  0000     VALMLR  DATA    0
04937  2670  1111             DATA    /1111
04938  2672  2222             DATA    /2222
04939  2674  4444             DATA    /4444
04940  2676  8888     ENDMLR  DATA    /8888
04941  2678  AAAA     DATML   DATA    /AAAA
04942  267A  000A             DATA    /A
04943  267C  00A0             DATA    /A0
04944  267E  0A00             DATA    /A00
04945  2680  A000     ENDML   DATA    /A000
04946  2682  0005     DATML1  DATA    /5
04947  2684  0050             DATA    /50
04948  2686  0500             DATA    /500
04949  2688  5000             DATA    /5000
04950  268A  5555     ENDML1  DATA    /5555
04951  268C  266E  R  INMLT6  DATA    VALMLR
04952        268E     RAZMLR  EQU     *
04953  268E  0000             DATA    0
04954  2690  0000             DATA    0
04955  2692  0000             DATA    0
04956  2694  0000             DATA    0
04957  2696  0000             DATA    0
04958  2698  0000             DATA    0
04959  269A  0000             DATA    0
04960  269C  0000             DATA    0
04961  269E  0000             DATA    0
04962  26A0  0000             DATA    0
04963  26A2  0000             DATA    0
04964  26A4  0000             DATA    0
```

```
04965  26A6  0000                DATA    0
04966  26A8  0000                DATA    0
04967  26AA  0000                DATA    0
04968        26AC        ZOMSR   EQU     *
04969  26AC                      RES     15
04970  26CA  26AC  R     INMST6  DATA    ZOMSR
04971                      *
```

04972 EJECT

```
04973                          EJECT
04974                  ********************************************************
04975                  *                                                      *
04976                  *       MLK      MULTIPLE LOAD CONSTANT                *
04977                  *                                                      *
04978                  ********************************************************
04979                  *
04980                  *       MLK      FORMAT T2   KL1,KL2...KLN TO A1,A2...AN
04981                  ***
04982                  *
04983  26CC  20BF      MLKT2   INH
04984  26CE  01FF              LDK      A1,/FF
04985  26D0  02FF              LDK      A2,/FF
04986  26D2  BBA0              MLK      1                    CR=0
04987  26D4  0000              DATA     0
04988  26D6  5002              RF(0)    *+4
04989  26D8  207F              HLT                           WRONG CR
04990  26DA  E920              CWK      A1,0
       26DC  0000
04991  26DE  5002              RF(0)    *+4
04992  26E0  207F              HLT                           WRONG REGISTER A1
04993  26E2  EA20              CWK      A2,/FF
       26E4  00FF
04994  26E6  5002              RF(0)    *+4
04995  26E8  207F              HLT                           WRONG REGISTER A2
04996                  *
04997  26EA  0100              LDK      A1,0
04998  26EC  BBA0              MLK      1                    CR=1
04999  26EE  7777              DATA     /7777
05000  26F0  5102              RF(1)    *+4
05001  26F2  207F              HLT                           WRONG CR
05002  26F4  E920              CWK      A1,/7777             CR=0
       26F6  7777
05003  26F8  5002              RF(0)    *+4
05004  26FA  207F              HLT                           WRONG REGISTER
05005                  *
05006  26FC  0100              LDK      A1,0
```

```
05007  26FE  88A0          MLK     1                 CR=2
05008  2700  9111          DATA    /9111
05009  2702  5202          RF(2)   *+4
05010  2704  207F          HLT                       WRONG CR
05011  2706  E920          CWK     A1,/9111          CR=0
       2708  9111
05012  270A  5002          RF(0)   *+4
05013  270C  207F          HLT                       WRONG REGISTER A1
05014                *
05015  270E  0100          LDK     A1,0
05016  2710  0200          LDK     A2,0
05017  2712  0300          LDK     A3,0
05018  2714  0400          LDK     A4,0
05019  2716  0500          LDK     A5,0
05020  2718  0600          LDK     A6,0
05021  271A  0700          LDK     A7,0
05022  271C  80A0          LDKL    A8,0
       271E  0000
05023  2720  81A0          LDKL    A9,0
       2722  0000
05024  2724  82A0          LDKL    A10,0
       2726  0000
05025  2728  83A0          LDKL    A11,0
       272A  0000
05026  272C  84A0          LDKL    A12,0
       272F  0000
05027  2730  85A0          LDKL    A13,0
       2732  0000
05028  2734  86A0          LDKL    A14,0
       2736  0000
05029  2738  87A0          LDKL    A15,0
       273A  0000
05030  273C  8FA0          MLK     15
05031  273E  8000    VALMLK DATA    /8000
05032  2740  4000          DATA    /4000
05033  2742  2000          DATA    /2000
05034  2744  1000          DATA    /1000
```

```
05035  2746  0800          DATA    /800
05036  2748  0400          DATA    /400
05037  274A  0200          DATA    /200
05038  274C  0100          DATA    /100
05039  274E  0080          DATA    /80
05040  2750  0040          DATA    /40
05041  2752  0020          DATA    /20
05042  2754  0010          DATA    /10
05043  2756  0008          DATA    8
05044  2758  0004          DATA    4
05045  275A  0002          DATA    2
05046  275C  5202          RF(2)   *+4
05047  275E  207F          HLT                     CHANGED CR
05048  2760  E920          CWK     A1,/8000
       2762  8000
05049  2764  5002          RF(0)   *+4
05050  2766  207F          HLT                     WRONG RESULT IN A1
05051  2768  EA20          CWK     A2,/4000
       276A  4000
05052  276C  5002          RF(0)   *+4
05053  276E  207F          HLT                     WRONG RESULT IN A2
05054  2770  EB20          CWK     A3,/2000
       2772  2000
05055  2774  5002          RF(0)   *+4
05056  2776  207F          HLT                     WRONG RESULT IN A3
05057  2778  EC20          CWK     A4,/1000
       277A  1000
05058  277C  5002          RF(0)   *+4
05059  277E  207F          HLT                     WRONG RESULT IN A4
05060  2780  ED20          CWK     A5,/800
       2782  0800
05061  2784  5002          RF(0)   *+4
05062  2786  207F          HLT                     WRONG RESULT IN A5
05063  2788  EE20          CWK     A6,/400
       278A  0400
05064  278C  5002          RF(0)   *+4
05065  278E  207F          HLT                     WRONG RESULT IN A6
```

```
05066  2790  EF20        CWK     A7,/200
       2792  0200
05067  2794  5002        RF(0)   *+4
05068  2796  207F        HLT                     WRONG RESULT IN A7
05069  2798  E8A0        CWK     A8,/100
       279A  0100
05070  279C  5002        RF(0)   *+4
05071  279E  207F        HLT                     WRONG RESULT IN A8
05072  27A0  E9A0        CWK     A9,/80
       27A2  0080
05073  27A4  5002        RF(0)   *+4
05074  27A6  207F        HLT                     WRONG RESULT IN A9
05075  27A8  EAA0        CWK     A10,/40
       27AA  0040
05076  27AC  5002        RF(0)   *+4
05077  27AE  207F        HLT                     WRONG RESULT IN A10
05078  27B0  EBA0        CWK     A11,/20
       27B2  0020
05079  27B4  5002        RF(0)   *+4
05080  27B6  207F        HLT                     WRONG RESULT IN A11
05081  27B8  ECA0        CWK     A12,/10
       27BA  0010
05082  27BC  5002        RF(0)   *+4
05083  27BE  207F        HLT                     WRONG RESULT IN A12
05084  27C0  EDA0        CWK     A13,8
       27C2  0008
05085  27C4  5002        RF(0)   *+4
05086  27C6  207F        HLT                     WRONG RESULT IN A13
05087  27C8  EFA0        CWK     A14,4
       27CA  0004
05088  27CC  5002        RF(0)   *+4
05089  27CE  207F        HLT                     WRONG RESULT IN A14
05090  27D0  EFA0        CWK     A15,2
       27D2  0002
05091  27D4  5002        RF(0)   *+4
05092  27D6  207F        HLT                     WRONG RESULT IN A15
05093
```

```
05094                          EJECT
05095                  ********************************************************
05096                  *                                                      *
05097                  *       MLR      MULTIPLE LOAD REGISTER                *
05098                  *                                                      *
05099                  ********************************************************
05100                  *
05101                  *       MLR      FORMAT T3B  (A15)+2N TO A15
05102                  ***                          ((A15)) TO A1
05103                  *                            ((A15)-2) TO A2
05104                  *
05105                  *                            ((A15)-2N+2) TO AN
05106                  *
05107  27D8  87A0             LDKL     A15,VALMLK-2
       27DA  273C  R
05108  27DC  BFBE             MLR      15,A15
05109  27DE  5102             RF(1)    *+4
05110  27F0  207F             HLT                              WRONG CR AFTER MLR
05111  27E2  E920             CWK      A1,2
       27F4  0002
05112  27E6  5002             RF(0)    *+4
05113  27F8  207F             HLT                              WRONG RESULT IN A1
05114  27FA  FD20             CWK      A5,/20
       27EC  0020
05115  27EE  5002             RF(0)    *+4
05116  27F0  207F             HLT                              WRONG RESULT IN A5
05117  27F2  FAA0             CWK      A10,/400
       27F4  0400
05118  27F6  5002             RF(0)    *+4
05119  27F8  207F             HLT                              WRONG RESULT IN A10
05120  27FA  EFA0             CWK      A15,/8000
       27FC  8000
05121  27FE  5002             RF(0)    *+4
05122  2000  207F             HLT                              WRONG RESULT IN A15
05123                  *
05124                  ***
05125                  *       MLR      FORMAT T3A  ((R2)) TO A1
```

```
05126                          ***                    ((R2)+2) TO A2
05127                          *
05128                          *                      ((R2)+2N-2) TO AN
05129                          *
05130  2A02  0100             LDK     A1,0                    INIT. REGISTERS
05131  2A04  0200             LDK     A2,0
05132  2A06  0300             LDK     A3,0
05133  2A08  0400             LDK     A4,0
05134  2A0A  0500             LDK     A5,0
05135  2A0C  0600             LDK     A6,0
05136  2A0E  0700             LDK     A7,0
05137  2A10  80A0             LDKL    A8,0
       2A12  0000
05138  2A14  81A0             LDKL    A9,0
       2A16  0000
05139  2A18  82A0             LDKL    A10,0
       2A1A  0000
05140  2A1C  83A0             LDKL    A11,0
       2A1E  0000
05141  2A20  84A0             LDKL    A12,0
       2A22  0000
05142  2A24  85A0             LDKL    A13,0
       2A26  0000
05143  2A28  86A0             LDKL    A14,0
       2A2A  0000
05144  2A2C  87A0             LDKL    A15,0
       2A2E  0000
05145  2A30  8120             LDKL    A1,VALMLK
       2A32  273E  R
05146  2A34  88A4             MLR     1,A1                    MLR N=1
05147  2A36  5202             RF(2)   *+4
05148  2A38  207F             HLT                             WRONG CR AFTER MLR
05149  2A3A  EA20             CWK     A2,0
       2A3C  0000
05150  2A3E  5002             RF(0)   *+4
05151  2A40  207F             HLT                             WRONG CR IN A2
05152  2A42  8120             LDKL    A1,VALMLK
```

```
      2A44  273E  R
05153 2A46  B924        MLR     2,A1
05154 2A48  5202        RF(2)   *+4
05155 2A4A  207F        HLT                     W CR A MLR
05156 2A4C  EA20        CWK     A2,/4000
      2A4E  4000
05157 2A50  5002        RF(0)   *+4
05158 2A52  207F        HLT                     W CR A2
05159 2A54  EB20        CWK     A3,0
      2A56  0000
05160 2A58  5002        RF(0)   *+4
05161 2A5A  207F        HLT                     W CR A3
05162 2A5C  8120        LDKL    A1,VALMLK
      2A5E  273F  R
05163 2A60  B9A4        MLR     3,A1            MLR N=3
05164 2A62  5202        RF(2)   *+4
05165 2A64  207F        HLT                     W CR A MLR
05166 2A66  EB20        CWK     A3,/2000
      2A68  2000
05167 2A6A  5002        RF(0)   *+4
05168 2A6C  207F        HLT                     W CR A3
05169 2A6E  EC20        CWK     A4,0
      2A70  0000
05170 2A72  5002        RF(0)   *+4
05171 2A74  207F        HLT                     W CR A4
05172 2A76  8120        LDKL    A1,VALMLK
      2A78  273F  R
05173 2A7A  BA24        MLR     4,A1            MLR N=4
05174 2A7C  5202        RF(2)   *+4
05175 2A7E  207F        HLT                     W CR A MLR
05176 2A80  EC20        CWK     A4,/1000
      2A82  1000
05177 2A84  5002        RF(0)   *+4
05178 2A86  207F        HLT                     W CR A4
05179 2A88  ED20        CWK     A5,0
      2A8A  0000
05180 2A8C  5002        RF(0)   *+4
```

```
05181  28BE  207F        HLT                      W CR A5
05182  28C0  8120        LDKL    A1,VALMLK
       28C2  273F  R
05183  28C4  BAA4        MLR     5,A1             MLR N=5
05184  28C6  5202        RF(2)   *+4
05185  28C8  207F        HLT                      W CR A MLR
05186  28CA  ED20        CWK     A5,/800
       28CC  0800
05187  28CE  5002        RF(0)   *+4
05188  28D0  207F        HLT                      W CR A5
05189  28D2  EE20        CWK     A6,0
       28D4  0000
05190  28D6  5002        RF(0)   *+4
05191  28D8  207F        HLT                      W CR A6
05192  28DA  8120        LDKL    A1,VALMLK
       28DC  273F  R
05193  28DE  BBB4        MLR     6,A1             MLR N=6
05194  28E0  5202        RF(2)   *+4
05195  28E2  207F        HLT                      W CR A MLR
05196  28E4  EF20        CWK     A6,/400
       28E6  0400
05197  28E8  5002        RF(0)   *+4
05198  28EA  207F        HLT                      W CR A6
05199  28EC  FF20        CWK     A7,0
       28EE  0000
05200  28F0  5002        RF(0)   *+4
05201  28F2  207F        HLT                      W CR A7
05202  28F4  8120        LDKL    A1,VALMLK
       28F6  273F  R
05203  28F8  BBA4        MLR     7,A1             MLR N=7
05204  28FA  5202        RF(2)   *+4
05205  28FC  207F        HLT                      W CR A MLR
05206  28FE  CF20        CWK     A7,/200
       2900  0200
05207  2902  5002        RF(0)   *+4
05208  2904  207F        HLT                      W CR A7
05209  2906  E8A0        CWK     A8,0
```

```
        28D8  0000
05210   28DA  5002          RF(0)    *+4
05211   28DC  207F          HLT                          W CR A8
05212   28DE  8120          LDKL     A1,VALMLK
        28E0  273E  R
05213   28E2  BC24          MLR      8,A1                MLR N=8
05214   28E4  5202          RF(2)    *+4
05215   28E6  207F          HLT                          W CR A MLR
05216   28E8  E8A0          CWK      A8,/100
        28EA  0100
05217   28EC  5002          RF(0)    *+4
05218   28EE  207F          HLT                          W CR A8
05219   28F0  E9A0          CWK      A9,0
        28F2  0000
05220   28F4  5002          RF(0)    *+4
05221   28F6  207F          HLT                          W CR A9
05222   28F8  8120          LDKL     A1,VALMLK
        28FA  273E  R
05223   28FC  BCA4          MLR      9,A1                MLR N=9
05224   28FE  5202          RF(2)    *+4
05225   2900  207F          HLT                          W CR A MLR
05226   2902  E9A0          CWK      A9,/80
        2904  0080
05227   2906  5002          RF(0)    *+4
05228   2908  207F          HLT                          W CR A9
05229   290A  EAA0          CWK      A10,0
        290C  0000
05230   290E  5002          RF(0)    *+4
05231   2910  207F          HLT                          W CR A10
05232   2912  8120          LDKL     A1,VALMLK
        2914  273E  R
05233   2916  BD24          MLR      10,A1               MLR N=10
05234   2918  5202          RF(2)    *+4
05235   291A  207F          HLT                          W CR A MLR
05236   291C  EAA0          CWK      A10,/40
        291E  0040
05237   2920  5002          RF(0)    *+4
```

```
05238 2922 207F        HLT                          W CR A10
05239 2924 EBA0        CWK     A11,0
      2926 0000
05240 2928 5002        RF(0)   *+4
05241 292A 207F        HLT                          W CR A11
05242 292C 8120        LDKL    A1,VALMLK
      292E 273E  R
05243 2930 BDA4        MLR     11,A1                MLR N=11
05244 2932 5202        RF(2)   *+4
05245 2934 207F        HLT                          W CR A MLR
05246 2936 EBA0        CWK     A11,/20
      2938 0020
05247 293A 5002        RF(0)   *+4
05248 293C 207F        HLT                          W CR A11
05249 293E ECA0        CWK     A12,0
      2940 0000
05250 2942 5002        RF(0)   *+4
05251 2944 207F        HLT                          W CR A12
05252 2946 8120        LDKL    A1,VALMLK
      2948 273E  R
05253 294A BF24        MLR     12,A1                MLR N=12
05254 294C 5202        RF(2)   *+4
05255 294E 207F        HLT                          W CR A MLR
05256 2950 ECA0        CWK     A12,/10
      2952 0010
05257 2954 5002        RF(0)   *+4
05258 2956 207F        HLT                          W CR A12
05259 2958 EDA0        CWK     A13,0
      295A 0000
05260 295C 5002        RF(0)   *+4
05261 295E 207F        HLT                          W CR A13
05262 2960 8120        LDKL    A1,VALMLK
      2962 273E  R
05263 2964 BFA4        MLR     13,A1                MLR N=13
05264 2966 5202        RF(2)   *+4
05265 2968 207F        HLT                          W CR A MLR
05266 296A EDA0        CWK     A13,/8
```

```
        296C  0008
05267   296E  5002          RF(0)    *+4
05268   2970  207F          HLT                        W CR A13
05269   2972  EFA0          CWR      A14,0
        2974  0000
05270   2976  5002          RF(0)    *+4
05271   2978  207F          HLT                        W CR A14
05272   297A  8120          LDKL     A1,VALMLK
        297C  273F  R
05273   297E  BF24          MLR      14,A1             MLR N=14
05274   2980  5202          RF(2)    *+4
05275   2982  207F          HLT                        W CR A MLR
05276   2984  EEA0          CWK      A14,/4
        2986  0004
05277   2988  5002          RF(0)    *+4
05278   298A  207F          HLT                        W CR A14
05279   298C  EFA0          CWK      A15,0
        298E  0000
05280   2990  5002          RF(0)    *+4
05281   2992  207F          HLT                        W CR A15
05282   2994  8120          LDKL     A1,VALMLK
        2996  273E  R
05283   2998  BFA4          MLR      15,A1             MLR N=15
05284   299A  5202          RF(2)    *+4
05285   299C  207F          HLT                        W CR A MLR
05286   299E  EFA0          CWK      A15,/2
        29A0  0002
05287   29A2  5002          RF(0)    *+4
05288   29A4  207F          HLT                        W CR A15
05289
```

```
05290                          EJECT
05291                    ********************************************************
05292                    *                                                      *
05293                    *       ML       MULTIPLE LOAD                         *
05294                    *                                                      *
05295                    ********************************************************
05296                    *
05297                    *       ML       FORMAT T4   (M) TO A1
05298                    ***                          (M+N) TO AN
05299                    *
05300  29A6  86A0                LDKL     A14,RAZMLR
       29A8  26BF  R
05301  29AA  BFBA                MLR      15,A14
05302  29AC  BAC0                ML       5,DATML
       29AE  2678  R
05303  29B0  5202                RF(2)    *+4
05304  29B2  207F                HLT                          WRONG CR
05305  29B4  B108                XRR      A1,A2
05306  29B6  B10C                XRR      A1,A3
05307  29B8  B110                XRR      A1,A4
05308  29BA  B114                XRR      A1,A5
05309  29BC  E920                CWK      A1,0                CR=0
       29BE  0000
05310  29C0  5002                RF(0)    *+4
05311  29C2  207F                HLT                          WRONG RESULT
05312                    ***
05313                    *       ML       FORMAT T5   (M+(X)) TO A1
05314                    ***                          (M+(X)+N) TO AN
05315                    *
05316  29C4  80A0                LDKL     A8,RAZMLR
       29C6  26BE  R
05317  29C8  BFA2                MLR      15,A8
05318  29CA  0104                LDK      A1,4
05319  29CC  BAC4                ML       5,DATML1-4,A1
       29CE  267F  R
05320  29D0  5102                RF(1)    *+4
05321  29D2  207F                HLT                          WRONG CR
```

```
05322  29D4  B108          XRR     A1,A2
05323  29D6  B10C          XRR     A1,A3
05324  29D8  B110          XRR     A1,A4
05325  29DA  B114          XRR     A1,A5
05326  29DC  E920          CWK     A1,0
       29DE  0000
05327  29E0  5002          RF(0)   *+4
05328  29E2  207F          HLT                             WRONG RESULT
05329                ***
05330                *      ML      FORMAT T6   ((M)) TO A1
05331                ***                        ((M)+N) TO AN
05332                *
05333  29E4  8320          LDKL    A3,RAZMLR
       29E6  268F  R
05334  29E8  BAAC          MLR     5,A3
05335  29EA  BAE0          ML*     5,INMLT6
       29EC  26BC  R
05336  29EE  5002          RF(0)   *+4
05337  29F0  207F          HLT                             WRONG CR
05338  29F2  B108          XRR     A1,A2
05339  29F4  B10C          XRR     A1,A3
05340  29F6  B110          XRR     A1,A4
05341  29F8  B114          XRR     A1,A5
05342  29FA  E920          CWK     A1,/FFFF                CR=0
       29FC  FFFF
05343  29FE  5002          RF(0)   *+4
05344  2A00  207F          HLT                             WRONG RESULT
05345                ***
05346                *      ML      FORMAT T7   ((M+(X))) TO A1
05347                ***                        ((M+(X))+N) TO AN
05348                *
05349  2A02  82A0          LDKL    A10,RAZMLR
       2A04  26AE  R
05350  2A06  BFAA          MLR     15,A10
05351  2A08  0708          LDK     A7,8
05352  2A0A  BFFC          ML*     15,INMLT6-8,A7
       2A0C  2684  R
```

```
05353  2A0E  5002          RF(0)    *+4
05354  2A10  207F          HLT                          WRONG CR
05355  2A12  B108          XRR      A1,A2
05356  2A14  B10C          XRR      A1,A3
05357  2A16  B110          XRR      A1,A4
05358  2A18  B114          XRR      A1,A5               A1=/FFFF
05359  2A1A  B118          XRR      A1,A6
05360  2A1C  B11C          XRR      A1,A7
05361  2A1E  6102          XRR      A1,A8
05362  2A20  B106          XRR      A1,A9
05363  2A22  B10A          XRR      A1,A10              A1=/FFFF
05364  2A24  B10E          XRR      A1,A11
05365  2A26  B112          XRR      A1,A12
05366  2A28  B116          XRR      A1,A13
05367  2A2A  B11A          XRR      A1,A14
05368  2A2C  B11E          XRR      A1,A15              A1=/FFFF
05369  2A2E  E920          CWK      A1,/FFFF            CR=0
       2A30  FFFF
05370  2A32  5002          RF(0)    *+4
05371  2A34  207F          HLT                          WRONG RESULT
05372
```

```
05373                          EJECT
05374                  ***************************************************
05375                  *                                                 *
05376                  *       MSR       MULTIPLE STORE REGISTER         *
05377                  *                                                 *
05378                  ***************************************************
05379                  *
05380                  *       MSR       FORMAT T3A  (A1) TO (R2)
05381                  ***                           (A2) TO (R2)+2
05382                  *
05383                  *                             (AN) TO (R2)+2N-2
05384                  *
05385  2A36  BAC0              ML        5,VALMLR
       2A38  266F  R
05386  2A3A  86A0              LDKL      A14,ZOMSR
       2A3C  26AC  R
05387  2A3E  85A0              LDKL      A13,/FFFF             CR=2
       2A40  FFFF
05388  2A42  85C1              ST        A13,ZOMSR+10
       2A44  26B6  R
05389  2A46  BABB              MSR       5,A14
05390  2A48  5202              RF(2)     *+4
05391  2A4A  207F              HLT                             CHANGED CR
05392  2A4C  BAC0              ML        5,RAZMLR              0 IN ALL REGISTERS A1-A5
       2A4E  26BE  R
05393  2A50  BAC0              ML        5,ZOMSR
       2A52  26AC  R
05394  2A54  B108              XRR       A1,A2
05395  2A56  B10C              XRR       A1,A3
05396  2A58  B110              XRR       A1,A4
05397  2A5A  B114              XRR       A1,A5
05398  2A5C  E920              CWK       A1,/FFFF              CR=0
       2A5E  FFFF
05399  2A60  5002              RF(0)     *+4
05400  2A62  207F              HLT                             WRONG RESULT
05401  2A64  8640              LD        A6,ZOMSR+10
       2A66  26B6  R
```

```
05402  2A68  EE20      CWK     A6,/FFFF          CR=0
       2A6A  FFFF
05403  2A6C  5002      RF(0)   *+4
05404  2A6E  207F      HLT                       WRONG MSR
```

```
05405                          EJECT
05406                    ***
05407                    *     MSR      FORMAT T3B  (A1) TO (A15)
05408                    ***                         (A2) TO (A15)-2
05409                    *
05410                    *                           (AN) TO (A15)-2N+2
05411                    *                           (A15)-2N TO A15
05412                    *
05413  2A70  BF40        *     ML       14,VALMLR
       2A72  266E  R
05414  2A74  87A0        *     LDKL     A15,ZOMSR+28          CR=1
       2A76  26C8  R
05415  2A78  BFBF        *     MSR      15,A15
05416  2A7A  5102        *     RF(1)    *+4
05417  2A7C  207F        *     HLT                            CHANGED CR
05418  2A7F  EFA0        *     CWK      A15,ZOMSR-2           CR=0
       2A80  26AA  R
05419  2A82  5002        *     RF(0)    *+4
05420  2A84  207F        *     HLT                            WRONG CONTENT A15
05421  2A86  BFC0        *     ML       15,RAZMLR             0 IN ALL REGISTERS A1-A15
       2A88  26BE  R
05422  2A8A  87A0        *     LDKL     A15,ZOMSR-2
       2A8C  26AA  R
05423  2A8E  BFBE        *     MLR      15,A15
05424  2A90  EFA0        *     CWK      A15,ZOMSR+28          CR=0
       2A92  26C8  R
05425  2A94  5002        *     RF(0)    *+4
05426  2A96  207F        *     HLT                            WRONG CONTENT A15
05427  2A98  B108        *     XRR      A1,A2
05428  2A9A  B10C        *     XRR      A1,A3
05429  2A9C  B110        *     XRR      A1,A4
05430  2A9E  B114        *     XRR      A1,A5                 A1=/FFFF
05431  2AA0  B118        *     XRR      A1,A6
05432  2AA2  B11C        *     XRR      A1,A7
05433  2AA4  B102        *     XRR      A1,A8
05434  2AA6  B106        *     XRR      A1,A9
05435  2AA8  B10A        *     XRR      A1,A10                A1=/FFFF
```

```
05436  2AAA  B10E      XRR     A1,A11
05437  2AAC  B112      XRR     A1,A12
05438  2AAE  B116      XRR     A1,A13
05439  2AB0  B11A      XRR     A1,A14          A1=/AAAA
05440  2AB2  E920      CWK     A1,/AAAA        CR=0
       2AB4  AAAA
05441  2AB6  5002      RF(0)   *+4
05442  2AB8  207F      HLT                     WRONG EXECUTE MSR
05443
```

```
05444                          EJECT
05445                  ********************************************************
05446                  *                                                      *
05447                  *       MS       MULTIPLE STORE                        *
05448                  *                                                      *
05449                  ********************************************************
05450                  *
05451                  *       MS       FORMAT T4   (A1) TO M
05452                  ***
05453                  *
05454  2ABA  BAC0              ML       5,DATML
       2ABC  2678  R
05455  2ABE  8620              LDKL     A6,/FFFF              CR=2
       2AC0  FFFF
05456  2AC2  8641              ST       A6,ZOMSR+6
       2AC4  26B2  R
05457  2AC6  B9C1              MS       3,ZOMSR
       2AC8  26AC  R
05458  2ACA  5202              RF(2)    *+4
05459  2ACC  207F              HLT                            CHANGED CR
05460  2ACE  BA40              ML       4,RAZMLR
       2AD0  268E  R
05461  2AD2  BA40              ML       4,ZOMSR
       2AD4  26AC  R
05462  2AD6  B108              XRR      A1,A2
05463  2AD8  B10C              XRR      A1,A3
05464  2ADA  B110              XRR      A1,A4
05465  2ADC  E920              CWK      A1,/55FF              CR=0
       2ADE  55FF
05466  2AE0  5002              RF(0)    *+4
05467  2AE2  207F              HLT                            WRONG RESULT
05468                  ***
05469                  *       MS       FORMAT T5   (A1) TO M+(X)
05470                  ***
05471                  *
05472  2AE4  B940              ML       2,DATML1              CR=1
       2AE6  2682  R
```

```
05473  2AE8  0306        LDK     A3,6
05474  2AEA  B94D        MS      2,ZOMSR-6,A3
       2AEC  26A6  R
05475  2AEE  B940        ML      2,RAZMLR
       2AF0  26BF  R
05476  2AF2  B940        ML      2,ZOMSR
       2AF4  26AC  R
05477  2AF6  B108        XRR     A1,A2             A1=/0055
05478  2AF8  E920        CWK     A1,/55            CR=0
       2AFA  0055
05479  2AFC  5002        RF(0)   *+4
05480  2AFE  207F        HLT                       WRONG RESULT
```

```
05481                                  EJECT
05482                          ***
05483                          *       MS      FORMAT T6   (A1) TO (M)
05484                          ***
05485  2B00  B9C0                     ML      3,VALMLR              CR=0
       2B02  266F  R
05486  2B04  B9E1                     MS*     3,INMST6
       2B06  26CA  R
05487  2B08  5002                     RF(0)   *+4
05488  2B0A  207F                     HLT                           CHANGED CR
05489  2B0C  B9C0                     ML      3,RAZMLR
       2B0E  26BE  R
05490  2B10  B9C0                     ML      3,ZOMSR
       2B12  26AC  R
05491  2B14  6108                     XRR     A1,A2
05492  2B16  610C                     XRR     A1,A3                 A1=/3333
05493  2B18  E920                     CWK     A1,/3333
       2B1A  3333
05494  2B1C  5002                     RF(0)   *+4
05495  2B1E  207F                     HLT                           WRONG RESULT
05496                          ***
05497                          *       MS      FORMAT T7   (A1) TO (M+(X))
05498                          ***
05499  2B20  BF40                     ML      14,VALMLR             CR=0
       2B22  266E  R
05500  2B24  87A0                     LDKL    A15,8
       2B26  0008
05501  2B28  BFFF                     MS*     15,INMST6-8,A15
       2B2A  26C2  R
05502  2B2C  5102                     RF(1)   *+4
05503  2B2E  207F                     HLT                           CHANGED CR
05504  2B30  BFC0                     ML      15,RAZMLR
       2B32  26BE  R
05505  2B34  BFC0                     ML      15,ZOMSR
       2B36  26AC  R
05506  2B38  6108                     XRR     A1,A2
05507  2B3A  610C                     XRR     A1,A3
```

```
05508  2A3C  B110        XRR     A1,A4
05509  2A3E  B114        XRR     A1,A5           A1=/FFFF
05510  2A40  B118        XRR     A1,A6
05511  2A42  B11C        XRR     A1,A7
05512  2A44  B102        XRR     A1,A8
05513  2A46  B106        XRR     A1,A9
05514  2A48  B10A        XRR     A1,A10          A1=/FFFF
05515  2A4A  B10F        XRR     A1,A11
05516  2A4C  B112        XRR     A1,A12
05517  2A4E  B116        XRR     A1,A13
05518  2A50  B11A        XRR     A1,A14
05519  2A52  B11F        XRR     A1,A15          A1=/AAA2
05520  2A54  E920        CWK     A1,/AAA2        CR=0
       2A56  AAA2
05521  2A58  5002        RF(0)   *+4
05522  2A5A  207F        HLT                     WRONG R
05523  2A5C  5720        RF      HLRMSR
```

```
05524                          EJECT
05525                    *
05526                    *
05527                    *     TEST MLR AND MSR FORMAT T3B
05528                    *     N<15
05529                    *
05530                    *
05531  2B5E  0001        MLRD  DATA    /1,2,4,8
       2B60  0002
       2B62  0004
       2B64  0008
05532  2B66  0010              DATA    16,32,64,128
       2B68  0020
       2B6A  0040
       2B6C  0080
05533  2B6E  0000        STRZ  DATA    0,0,0,0
       2B70  0000
       2B72  0000
       2B74  0000
05534  2B76  0000              DATA    /0,0,0,0
       2B78  0000
       2B7A  0000
       2B7C  0000
05535        2B7E        MLRMSR EQU    *
05536  2B7E  87A0              LDKL    A15,STACK
       2B80  0180
05537  2B82  BC40              ML      8,MLRD
       2B84  2B5E  R
05538  2B86  BC3F              MSR     8,A15
05539  2B88  EFA0              CWK     A15,STACK-16
       2B8A  0170
05540  2B8C  5002              RF(E)   *+4
05541  2B8E  207F              HLT                     A15 NOT CORRECT AFTER MSR
05542  2B90  BC40              ML      8,STRZ          DESTROY REGISTERS
       2B92  2B6E  R
05543  2B94  BC3F              MLR     8,A15
05544  2B96  EFA0              CWK     A15,STACK
```

```
        2B98  0180
05545   2B9A  5002          RF(E)     *+4
05546   2B9C  207F          HLT                    A15 IS NOT CORRECT AFTER MLR
05547   2B9E  9108          ADR       A1,A2
05548   2BA0  910C          ADR       A1,A3
05549   2BA2  9110          ADR       A1,A4
05550   2BA4  9114          ADR       A1,A5
05551   2BA6  9118          ADR       A1,A6
05552   2BA8  911C          ADR       A1,A7
05553   2BAA  9102          ADR       A1,A8
05554   2BAC  E920          CWK       A1,/00FF
        2BAE  00FF
05555   2BB0  5002          RF(F)     *+4
05556   2BB2  207F          HLT                    DATA STORAGE WRONG SEE MLR OR MSR
```

```
05557                          EJECT
05558                  ****************************************************
05559                  *                                                  *
05560                  *        DLA       DOUBLE LEFT ARITHMETIC SHIFT    *
05561                  *                                                  *
05562                  ****************************************************
05563                  *
05564  2AB4  0100             LDK       A1,0
05565  2AB6  0201             LDK       A2,1
05566  2AB8  8320             LDKL  -   A3,/FFFF              CR=2
       2ABA  FFFF
05567  2ABC  $800             DLA       0                     CR=1
05568  2ABE  5102             RF(1)     *+4
05569  2AC0  207F             HLT                             WRONG CR
05570  2AC2  E920             CWK       A1,0
       2AC4  0000
05571  2AC6  5002             RF(0)     *+4
05572  2AC8  207F             HLT                             WRONG CONTENT A0
05573  2ACA  EA20             CWK       A2,1
       2ACC  0001
05574  2ACE  5002             RF(0)     *+4
05575  2AD0  207F             HLT                             WRONG CONTENT A1
05576                  *
05577  2AD2  0100             LDK       A1,0
05578  2AD4  0200             LDK       A2,0
05579  2AD6  3810             DLA       16                    CR=0
05580  2AD8  5002             RF(0)     *+4
05581  2ADA  207F             HLT                             WRONG CR
05582  2ADC  E920             CWK       A1,0                  CR=0
       2ADE  0000
05583  2AE0  5002             RF(0)     *+4
05584  2AE2  207F             HLT                             WRONG CONTENT A1
05585  2AE4  EA20             CWK       A2,0                  CR=0
       2AE6  0000
05586  2AE8  5002             RF(0)     *+4
05587  2AEA  207F             HLT                             WRONG CONTENT A2
05588                  *
```

```
05589  2BEC  0100          LDK     A1,0
05590  2BEE  0201          LDK     A2,1
05591  2BF0  381D          DLA     29                  CR=1
05592  2BF2  5102          RF(1)   *+4
05593  2BF4  207F          HLT                         WRONG CR
05594  2BF6  E920          CWK     A1,/4000            CR=0
       2BF8  4000
05595  2BFA  5002          RF(0)   *+4
05596  2BFC  207F          HLT                         WRONG CONTENT A1
05597  2BFE  EA20          CWK     A2,0
       2C00  0000
05598  2C02  5002          RF(0)   *+4
05599  2C04  207F          HLT                         WRONG CONTENT A2
05600                *
05601  2C06  8120          LDKL    A1,/FFAA
       2C08  FFAA
05602  2C0A  8220          LDKL    A2,/5555
       2C0C  5555
05603  2C0E  3808          DLA     8                   CR=2
05604  2C10  5202          RF(2)   *+4
05605  2C12  207F          HLT                         WRONG CR
05606  2C14  E920          CWK     A1,/AAAA
       2C16  AAAA
05607  2C18  5002          RF(0)   *+4
05608  2C1A  207F          HLT                         WRONG CONTENT A1
05609  2C1C  EA20          CWK     A2,/5500
       2C1E  5500
05610  2C20  5002          RF(0)   *+4
05611  2C22  207F          HLT                         WRONG CONTENT A2
05612                *
05613  2C24  8120          LDKL    A1,/1111
       2C26  1111
05614  2C28  8220          LDKL    A2,/7F00
       2C2A  7F00
05615  2C2C  3803          DLA     3                   CR=3
05616  2C2E  5302          RF(3)   *+4
05617  2C30  207F          HLT                         WRONG CR
```

```
05618  2C32  E920          CWK     A1,/888F          CR=0
       2C34  888F
05619  2C36  5002          RF(0)   *+4
05620  2C38  207F          HLT                       WRONG CONTENT A1
05621  2C3A  EA20          CWK     A2,/7800          CR=0
       2C3C  7800
05622  2C3E  5002          RF(0)   *+4
05623  2C40  207F          HLT                       WRONG CONTENT A2
05624
```

```
05625                       EJECT
05626                  ***************************************************
05627                  *                                                 *
05628                  *       DRA       DOUBLE RIGHT ARITHMETIC SHIFT   *
05629                  *                                                 *
05630                  ***************************************************
05631                  *
05632  2C42  0100             LDK       A1,0
05633  2C44  0200             LDK       A2,0
05634  2C46  383F             DRA       30                    CR=0
05635  2C48  5002             RF(0)     *+4
05636  2C4A  207F             HLT                             WRONG CR
05637  2C4C  E920             CWK       A1,0                  CR=0
       2C4E  0000
05638  2C50  5002             RF(0)     *+4
05639  2C52  207F             HLT                             WRONG CONTENT A1
05640  2C54  EA20             CWK       A2,0
       2C56  0000
05641  2C58  5002             RF(0)     *+4
05642  2C5A  207F             HLT                             WRONG CONTENT A2
05643                  *
05644  2C5C  0177             LDK       A1,/77
05645  2C5E  8220             LDKL      A2,/8888
       2C60  8888
05646  2C62  3820             DRA       0                     CR=1
05647  2C64  E920             CWK       A1,/77                CR=0
       2C66  0077
05648  2C68  5002             RF(0)     *+4
05649  2C6A  207F             HLT                             CHANGED CONTENT
05650  2C6C  EA20             CWK       A2,/0888              CR=0
       2C6E  0888
05651  2C70  5002             RF(0)     *+4
05652  2C72  207F             HLT                             CHANGED CONTENT
05653                  *
05654  2C74  8120             LDKL      A1,/7FFF
       2C76  7FFF
05655  2C78  8220             LDKL      A2,/FFFF              CR=2
```

```
                2C7A  FFFF
05656           2C7C  383D          DRA     29                  CR=1
05657           2C7E  5102          RF(1)   *+4
05658           2C80  207F          HLT                         WRONG CR
05659           2C82  E920          CWK     A1,0                CR=0
                2C84  0000
05660           2C86  5002          RF(0)   *+4
05661           2C88  207F          HLT                         WRONG CONTENT A1
05662           2C8A  EA20          CWK     A2,1                CR=0
                2C8C  0001
05663           2C8E  5002          RF(0)   *+4
05664           2C90  207F          HLT                         WRONG CONTENT A2
05665                          *
05666           2C92  8120          LDKL    A1,/8000
                2C94  8000
05667           2C96  0200          LDK     A2,0
05668           2C98  383F          DRA     30                  CR=2
05669           2C9A  5202          RF(2)   *+4
05670           2C9C  207F          HLT                         WRONG CR
05671           2C9E  E920          CWK     A1,/FFFF            CR=0
                2CA0  FFFF
05672           2CA2  5002          RF(0)   *+4
05673           2CA4  207F          HLT
05674           2CA6  EA20          CWK     A2,/7FFF            CR=0
                2CA8  7FFF
05675           2CAA  5002          RF(0)   *+4
05676           2CAC  207F          HLT
05677
```

```
05678                          EJECT
05679                  ****************************************************
05680                  *                                                  *
05681                  *       DLL      DOUBLE LEFT LOGICAL SHIFT         *
05682                  *                                                  *
05683                  ****************************************************
05684                  *
05685  2CAE  8120              LDKL     A1,/8000
       2CB0  8000
05686  2CB2  8220              LDKL     A2,/8000
       2CB4  8000
05687  2CB6  3851              DLL      17                    CR=0
05688  2CB8  5002              RF(0)    *+4
05689  2CBA  207F              HLT                            WRONG CR
05690  2CBC  E920              CWK      A1,0                  CR=0
       2CBE  0000
05691  2CC0  5002              RF(0)    *+4
05692  2CC2  207F              HLT                            WRONG CONTENT A1
05693  2CC4  EA20              CWK      A2,0                  CR=0
       2CC6  0000
05694  2CC8  5002              RF(0)    *+4
05695  2CCA  207F              HLT                            WRONG CONTENT A2
05696                  *
05697  2CCC  8120              LDKL     A1,/0789
       2CCE  0789
05698  2CD0  8220              LDKL     A2,/ABCD
       2CD2  ABCD
05699  2CD4  3844              DLL      4                     CR=1
05700  2CD6  5102              RF(1)    *+4
05701  2CD8  207F              HLT                            WRONG CR
05702  2CDA  E920              CWK      A1,/789A
       2CDC  789A
05703  2CDE  5002              RF(0)    *+4
05704  2CE0  207F              HLT                            WRONG CONTENT A1
05705  2CE2  EA20              CWK      A2,/BCD0
       2CE4  BCD0
05706  2CE6  5002              RF(0)    *+4
```

```
05707  2CC8  207F          HLT                         WRONG CONTENT A2
05708                    *
05709  2CCA  8220          LDKL    A2,/FFFF
       2CCC  FFFF
05710  2CCE  8120          LDKL    A1,/7FFF            CR=1
       2CD0  7FFF
05711  2CD2  385F          DLL     1                   CR=2
05712  2CD4  5202          RF(2)   *+4
05713  2CD6  207F          HLT                         WRONG CR
05714  2CD8  E920          CWK     A1,/8000            CR=0
       2CDA  8000
05715  2CDC  5002          RF(0)   *+4
05716  2CDE  207F          HLT                         WRONG CONTENT A1
05717  2D00  EA20          CWK     A2,0
       2D02  0000
05718  2D04  5002          RF(0)   *+4
05719  2D06  207F          HLT                         WRONG CONTENT A2
05720
```

```
05721                   EJECT
05722                 ********************************************************
05723                 *                                                      *
05724                 *       DRL     DOUBLE RIGHT LOGICAL SHIFT             *
05725                 *                                                      *
05726                 ********************************************************
05727                 *
05728  2D08  8120              LDKL    A1,/FFFF
       2D0A  FFFF
05729  2D0C  8220              LDKL    A2,/FFFF                CR=2
       2D0E  FFFF
05730  2D10  387F              DRL     31                      CR=1
05731  2D12  E920              CWK     A1,0                    CR=0
       2D14  0000
05732  2D16  5002              RF(0)   *+4
05733  2D18  207F              HLT                             WRONG CONTENT A1
05734  2D1A  EA20              CWK     A2,1                    CR=0
       2D1C  0001
05735  2D1E  5002              RF(0)   *+4
05736  2D20  207F              HLT                             WRONG CONTENT A2
05737
05738                 ********************************************************
05739                 *                                                      *
05740                 *       DLC     DOUBLE LEFT CIRCULAR SHIFT             *
05741                 *                                                      *
05742                 ********************************************************
05743                 *
05744  2D22  8120              LDKL    A1,/E000
       2D24  E000
05745  2D26  8220              LDKL    A2,/A00
       2D28  0A00
05746  2D2A  38DF              DLC     31                      CR=1
05747  2D2C  E920              CWK     A1,/7000                CR=0
       2D2E  7000
05748  2D30  5002              RF(0)   *+4
05749  2D32  207F              HLT                             WRONG CONTENT A1
05750  2D34  EA20              CWK     A2,/500                 CR0
```

```
        2D36  0500
05751   2D38  5002          RF(0)    *+4
05752   2D3A  207F          HLT                        WRONG CONTENT A2
05753
```

```
05754                          EJECT
05755                  ********************************************************
05756                  *                                                      *
05757                  *       DRC      DOUBLE RIGHT CIRCULAR SHIFT           *
05758                  *                                                      *
05759                  ********************************************************
05760                  *
05761  2D3C  8120              LDKL     A1,/90
       2D3E  0090
05762  2D40  8220              LDKL     A2,/F000              CR=2
       2D42  F000
05763  2D44  38FF              DRC      31
05764  2D46  E920              CWK      A1,/121               CR=0
       2D48  0121
05765  2D4A  5002              RF(0)    *+4
05766  2D4C  207F              HLT                            WRONG CONTENT A1
05767  2D4E  EA20              CWK      A2,/F000
       2D50  F000
05768  2D52  5002              RF(0)    *+4
05769  2D54  207F              HLT                            WRONG CONTENT A2
05770
```

```
05771                          EJECT
05772                  ********************************************************
05773                  *                                                      *
05774                  *       DLN      DOUBLE LEFT AND NORMALIZE SHIFT       *
05775                  *                                                      *
05776                  ********************************************************
05777                  *
05778  2D56  0100             LDK      A1,0
05779  2D58  0200             LDK      A2,0
05780  2D5A  389E             DLN      A15
05781  2D5C  EFA0             CWK      A15,31              CR=0
       2D5E  001F
05782  2D60  5002             RF(0)    *+4
05783  2D62  207F             HLT                          WRONG NUMBER OF SHIFTS
05784  2D64  87A0             LDKL     A15,STACK
       2D66  0180
05785  2D68  A908             ORR      A1,A2
05786  2D6A  5002             RF(0)    *+4
05787  2D6C  207F             HLT                          WRONG RESULT IN A1 OR A2
05788                  *
05789  2D6F  0100             LDK      A1,0
05790  2D70  8220             LDKL     A2,/4000
       2D72  4000
05791  2D74  8420             LDKL     A4,/8000            CR=2
       2D76  8000
05792  2D78  388C             DLN      A3
05793  2D7A  5202             RF(2)    *+4
05794  2D7C  207F             HLT                          CHANGED CR
05795  2D7E  E820             CWK      A3,15
       2D80  000F
05796  2D82  5002             RF(0)    *+4
05797  2D84  207F             HLT                          WRONG RESULT SHIFT
05798  2D86  A908             ORR      A1,A2
05799  2D88  E920             CWK      A1,/4000
       2D8A  4000
05800  2D8C  5002             RF(0)    *+4
05801  2D8E  207F             HLT                          WRONG RESULT IN A1 OR A2
```

```
05802                                   *
05803  2D90  8120          LDKL    A1,/F111
       2D92  F111
05804  2D94  8220          LDKL    A2,/4444        CR=1
       2D96  4444
05805  2D98  3882          DLN     A8
05806  2D9A  5102          RF(1)   *+4
05807  2D9C  207F          HLT                     CHANGED CR
05808  2D9E  E8A0          CWK     A8,3            CR=0
       2DA0  0003
05809  2DA2  5002          RF(0)   *+4
05810  2DA4  207F          HLT                     WRONG RESULT SHIFT
05811  2DA6  E920          CWK     A1,/888C
       2DA8  888C
05812  2DAA  5002          RF(0)   *+4
05813  2DAC  207F          HLT                     WRONG A1
05814  2DAE  EA20          CWK     A2,/2220
       2DB0  2220
05815  2DB2  5002          RF(0)   *+4
05816  2DB4  207F          HLT                     WRONG A2
05817
```

```
05A18                    EJECT
05A19                ****************************************************
05A20                *                                                  *
05A21                *        DRN       DOUBLE RIGHT AND NORMALIZE SHIFT *
05A22                *                                                  *
05A23                ****************************************************
05A24                *
05A25  2DB6  0100            LDK       A1,0
05A26  2DB8  0200            LDK       A2,0
05A27  2DBA  3884            DRN       A5
05A28  2DBC  ED20            CWK       A5,31               CR=0
       2DBE  001F
05A29  2DC0  5002            RF(0)     *+4
05A30  2DC2  207F            HLT                           WRONG NUMBER OF SHIFTS
05A31  2DC4  A908            ORR       A1,A2
05A32  2DC6  5002            RF(0)     *+4
05A33  2DC8  207F            HLT                           WRONG RESULT IN A1 OR A2
05A34                *
05A35  2DCA  010F            LDK       A1,/F
05A36  2DCC  8220            LDKL      A2,/70F0
       2DCE  70F0
05A37  2DD0  8320            LDKL      A3,/8000            CR=2
       2DD2  8000
05A38  2DD4  3888            DRN       A6
05A39  2DD6  5202            RF(2)     *+4
05A40  2DD8  207F            HLT                           CHANGED CR
05A41  2DDA  EE20            CWK       A6,4                CR=0
       2DDC  0004
05A42  2DDE  5002            RF(0)     *+4
05A43  2DE0  207F            HLT                           WRONG NUMBER OF SHIFTS
05A44  2DE2  B108            XRR       A1,A2
05A45  2DE4  E920            CWK       A1,/7F0F
       2DE6  7F0F
05A46  2DE8  5002            RF(0)     *+4
05A47  2DEA  207F            HLT                           WRONG RESULT IN A1 OR A2
05A48                *
05A49  2DEC  8120            LDKL      A1,/F000
```

```
                 2DEE  F000
05A50            2DF0  8220          LDKL    A2,/100             CR=1
                 2DF2  0100
05A51            2DF4  388E          DRN     A15
05A52            2DF6  5102          RF(1)   *+4
05A53            2DF8  207F          HLT                         CHANGED CR
05A54            2DFA  EF40          CWK     A15,8               CR=0
                 2DFC  0008
05A55            2DFE  5002          RF(0)   *+4
05A56            2E00  207F          HLT                         WRONG NUMBER OF SHIFTS
05A57            2E02  B108          XRR     A1,A2
05A58            2E04  E920          CWK     A1,/FFF1            CR=0
                 2E06  FFF1
05A59            2E08  5002          RF(0)   *+4
05A60            2E0A  207F          HLT                         WRONG RESULT IN A1 OR A2
05A61            2E0C  87A0          LDKL    A15,STACK
                 2E0E  0180
05A62                            *
05A63            2E10  01FC          LDK     A1,/FC
05A64            2E12  0201          LDK     A2,1
05A65            2E14  38BC          DRN     A7
05A66            2E16  EF20          CWK     A7,0
                 2E18  0000
05A67            2E1A  5002          RF(0)   *+4
05A68            2E1C  207F          HLT                         WRONG NUMBER OF SHIFT
05A69            2E1E  B108          XRR     A1,A2
05A70            2E20  E920          CWK     A1,/FD              CR=0
                 2E22  00FD
05A71            2E24  501A          RF(0)   DAKT2
05A72            2E26  207F          HLT                         WRONG RESULT IN A1 OR A2
05A73
```

```
05A74                          EJECT
05A75                  ********************************************************
05A76                  *                                                      *
05A77                  *                  OPERATION   CODE 10                 *
05A78                  *                                                      *
05A79                  ********************************************************
05A80                  *
05A81  2F28  0000      VALDAR   DATA     0
05A82  2F2A  00FF               DATA     /FF
05A83  2F2C  FFFF      VALDA1   DATA     /FFFF
05A84  2F2E  7FFF               DATA     /7FFF
05A85  2F30  5555      VALDA2   DATA     /5555
05A86  2F32  0000               DATA     0
05A87  2F34  8100      VALDA3   DATA     /8100
05A88  2F36  0000               DATA     0
05A89  2F38  7FFF      VALDA4   DATA     /7FFF
05A90  2F3A  7FFF               DATA     /7FFF
05A91  2F3C  2E34  R   INDAT6   DATA     VALDA3
05A92  2F3E  2E38  R   INDAT7   DATA     VALDA4
05A93                  *
05A94                  ********************************************************
05A95                  *                                                      *
05A96                  *        DAK       DOUBLE ADDITION WITH CONSTANT       *
05A97                  *                                                      *
05A98                  ********************************************************
05A99                  *
05900                  *        DAK       FORMAT T2   KL + (A1,A2) TO A1,A2
05901                  ***
05902                  *
05903  2F40  0100      DAKT2    LDK       A1,0
05904  2F42  0200               LDK       A2,0
05905  2F44  8320               LDKL      A3,/8000              CR=2
       2F46  8000
05906  2F48  0020               DAK       0,0                   CR=0
       2F4A  0000
       2F4C  0000
05907  2F4E  5002               RF(0)     *+4
```

```
05908  2F50  207F          HLT                         WRONG CR
05909  2F52  A908          ORR     A1,A2               CR=0
05910  2F54  5002          RF(0)   *+4
05911  2F56  207F          HLT                         WRONG RESULT IN A1 OR A2
05912                *
05913  2F58  8220          LDKL    A2,/7FFF
       2F5A  7FFF
05914  2F5C  8120          LDKL    A1,/FFFF            CR=2 (A1/A2=-1)
       2F5E  FFFF
05915  2E60  D020          DAK     0,2                 CR=1
       2F62  0000
       2F64  0002
05916  2E66  5102          RF(1)   *+4
05917  2F68  207F          HLT                         WRONG CR
05918  2F6A  B108          XRR     A1,A2
05919  2F6C  E920          CWK     A1,1                CR=0
       2F6E  0001
05920  2F70  5002          RF(0)   *+4
05921  2F72  207F          HLT                         WRONG RESULT IN A1 OR A2
05922                *
05923  2F74  0100          LDK     A1,0
05924  2F76  0201          LDK     A2,1
05925  2F78  D020          DAK     /FFFF,/7FFE         CR=2 (KL=-2)
       2F7A  FFFF
       2F7C  7FFE
05926  2F7E  5202          RF(2)   *+4
05927  2F80  207F          HLT                         WRONG CR
05928  2F82  B108          XRR     A1,A2
05929  2F84  E920          CWK     A1,/8000            CR=0
       2F86  8000
05930  2F88  5002          RF(0)   *+4
05931  2F8A  207F          HLT                         WRONG RESULT IN A1 OR A2
05932                *
05933  2F8C  8120          LDKL    A1,/7FFF
       2F8E  7FFF
05934  2F90  8220          LDKL    A2,/7FFF            CR=1
       2F92  7FFF
```

```
05035  2F94  D020        DAK     0,1             CR=3
       2F96  0000
       2F98  0001
05036  2F9A  5302        RF(3)   *+4
05037  2F9C  207F        HLT                     WRONG CR
05038  2F9E  A908        ORR     A1,A2
05039  2FA0  E920        CWK     A1,/8000        CR=0
       2FA2  8000
05040  2FA4  5002        RF(0)   *+4
05041  2FA6  207F        HLT                     WRONG RESULT IN A1 OR A2
05042                    *
05043  2FA8  0240        LDK     A2,0
05044  2FAA  8120        LDKL    A1,/8000        CR=2
       2FAC  8000
05045  2FAE  D020        DAK     /8000,0         CR=3
       2FB0  8000
       2FB2  0000
05046  2FB4  5302        RF(3)   *+4
05047  2FB6  207F        HLT                     WRONG CR
05048  2FB8  A908        ORR     A1,A2           CR=0
05049  2FBA  5002        RF(0)   *+4
05050  2FBC  207F        HLT                     WRONG RESULT IN A1 OR A2
05051                    *
05052  2FBE  0107        LDK     A1,7
05053  2FC0  0207        LDK     A2,7
05054  2FC2  D020        DAK     /FFFF,/7FFF     CR=1
       2FC4  FFFF
       2FC6  7FFF
05055  2FC8  5102        RF(1)   *+4
05056  2FCA  207F        HLT                     WRONG CR
05057  2FCC  B108        XRR     A1,A2
05058  2FCE  E920        CWK     A1,1            CR=0
       2FD0  0001
05059  2FD2  5002        RF(0)   *+4
05060  2FD4  207F        HLT                     WRONG RESULT IN A1 OR A2
05061
```

```
05962                       EJECT
05963                  ****************************************************
05964                  *                                                  *
05965                  *       DAR       DOUBLE ADD REGISTER / REGISTER   *
05966                  *                                                  *
05967                  ****************************************************
05968                  *
05969                  *       DAR       FORMAT T1   (R2,R2+1)+(A1,A2) TO A1,A2
05970                  ***
05971                  *
05972  2FD6  0100               LDK       A1,0
05973  2FD8  8220               LDKL      A2,/6666
       2FDA  6666
05974  2FDC  0300               LDK       A3,0
05975  2FDE  8420               LDKL      A4,/1111
       2FE0  1111
05976  2FE2  8620               LDKL      A6,/8000              CR=2
       2FE4  8000
05977  2FE6  D00C               DAR       A3                    CR=1
05978  2FE8  5102               RF(1)     *+4
05979  2FEA  207F               HLT                             WRONG CR
05980  2FEC  B108          *    XRR       A1,A2
05981  2FEE  E920               CWK       A1,/7777              CR=0
       2FF0  7777
05982  2FF2  5002               RF(0)     *+4
05983  2FF4  207F               HLT                             WRONG RESULT IN A1 OR A2.
05984                  ***
05985                  *       DAR       FORMAT T2   ((R2),(R2+1))+(A1,A2) TO A1,A2
05986                  ***
05987                  *
05988  2FF6  8120               LDKL      A1,/FFFF
       2FF8  FFFF
05989  2FFA  8220               LDKL      A2,/7FFF
       2FFC  7FFF
05990  2FFE  82A0               LDKL      A10,VALDAR            CR=1
       3000  2E28  R
05991  3002  D02A               DAR*      A10                   CR1
```

```
05992  2F04  5102          RF(1)    *+4
05993  2F06  207F          HLT                        WRONG CR
05994  2F08  B108          XRR      A1,A2
05995  2F0A  E920          CWK      A1,/00FE
       2F0C  00FE
05996  2F0E  5002          RF(0)    *+4
05997  2F10  207F          HLT                        WRONG RESULT IN A1 OR A2
05998
```

```
05999                          EJECT
06000                  ********************************************************
06001                  *                                                      *
06002                  *       DA       DOUBLE ADDITION                       *
06003                  *                                                      *
06004                  ********************************************************
06005                  *
06006                  *       DA       FORMAT T4   (M,M+1)+(A1,A2) TO A1,A2
06007                  ***
06008                  *
06009  2F12  0100              LDK      A1,0
06010  2F14  0201              LDK      A2,1
06011  2F16  8320              LDKL     A3,/8000              CR=2
       2F18  8000
06012  2F1A  D040              DA       VALDA1                CR=0
       2F1C  2F2C  R
06013  2F1E  5002              RF(0)    *+4
06014  2F20  207F              HLT                            WRONG CR
06015  2F22  8108              LDR      A1,A2
06016  2F24  5002              RF(0)    *+4
06017  2F26  207F              HLT                            WRONG RESULT IN A1 OR A2
06018                  ***
06019                  *       DA       FORMAT T5   (M+(X),(M+(X)+1)+A1,A2 TO
06020                  ***                                        A1,A2
06021                  *
06022  2F28  0100              LDK      A1,0
06023  2F2A  8220              LDKL     A2,/5555
       2F2C  5555
06024  2F2E  0308              LDK      A3,8
06025  2F30  8420              LDKL     A4,/8000              CR=2
       2F32  8000
06026  2F34  D04C              DA       VALDA2-8,A3           CR=1
       2F36  2E28  R
06027  2F38  5102              RF(1)    *+4
06028  2F3A  207F              HLT                            WRONG CR
06029  2F3C  8108              XRR      A1,A2
06030  2F3E  8104              LDR      A1,A1                 CR=0
```

```
06031  2F40  5002          RF(0)    *+4
06032  2F42  207F          HLT                          WRONG RESULT IN A1 OR A2
06033                ***
06034                *      DA       FORMAT T6   ((M),(M)+1)+(A1,A2) TO A1,A2
06035                ***
06036                *
06037  2F44  0200          LDK      A2,0
06038  2F46  8120          LDKL     A1,/100             CR=1
       2F48  0100
06039  2F4A  D060          DA*      INDAT6              CR=2
       2F4C  2F3C  R
06040  2F4E  5202          RF(2)    *+4
06041  2F50  207F          HLT                          WRONG CR
06042  2F52  B108          XRR      A1,A2
06043  2F54  E920          CWK      A1,/8200            CR=0
       2F56  8200
06044  2F58  5002          RF(0)    *+4
06045  2F5A  207F          HLT                          WRONG RESULT IN A1 OR A2
06046                ***
06047                *      DA       FORMAT T7   ((M+(X)),(M+(X))+1) + (A1,A2)
06048                ***                                 TO A1,A2
06049                *
06050  2F5C  0100          LDK      A1,0
06051  2F5E  0201          LDK      A2,1
06052  2F60  0304          LDK      A3,4
06053  2F62  D06C          DA*      INDAT7-4,A3         CR=3
       2F64  2F3A  R
06054  2F66  5302          RF(3)    *+4
06055  2F68  207F          HLT                          WRONG CR
06056  2F6A  B108          XRR      A1,A2
06057  2F6C  E920          CWK      A1,/8000            CR=0
       2F6E  8000
06058  2F70  5028          RF(0)    DSKT2
06059  2F72  207F          HLT                          WRONG RESULT IN A1 OR A2
06060
```

```
06061                          EJECT
06062                     ******************************************************
06063                     *                                                    *
06064                     *                  OPERATION   CODE 11               *
06065                     *                                                    *
06066                     ******************************************************
06067                     *
06068  2F74  2AAA         VALDSR   DATA     /2AAA
06069  2F76  0000                  DATA     0
06070  2F78  0000         VALDT4   DATA     0
06071  2F7A  0002                  DATA     2
06072  2F7C  0000         VALDT5   DATA     0
06073  2F7E  0001                  DATA     1
06074  2F80  FFFF         VALDT6   DATA     /FFFF
06075  2F82  7FFF                  DATA     /7FFF
06076  2F84  5A5A         VALDT7   DATA     /5A5A
06077  2F86  5A5A                  DATA     /5A5A
06078  2F88  2F80  R       INDST6   DATA     VALDT6
06079  2F8A  2F84  R       INDST7   DATA     VALDT7
06080                     *
06081  2F8C  AAAA         VALCAR   DATA     /AAAA
06082  2F8E  8AAA         VACAT4   DATA     /8AAA
06083  2F90  FFFF         VACAT5   DATA     /FFFF
06084  2F92  0000         VACAT6   DATA     0
06085  2F94  800D         VACAT7   DATA     /800D
06086  2F96  2F92  R       INCAT6   DATA     VACAT6
06087  2F98  2F94  R       INCAT7   DATA     VACAT7
06088                     *
06089                     *
06090                     ******************************************************
06091                     *                                                    *
06092                     *         DSK      DOUBLE SUBTRACT WITH CONSTANT     *
06093                     *                                                    *
06094                     ******************************************************
06095                     *
06096                     *         DSK      FORMAT T2   (A1,A2) - KL TO A1,A2
06097                     ***
```

```
06098                          *
06099                          *
06100          2F9A    DSKT2   EQU     *
06101  2F9A    0100            LDK     A1,0
06102  2F9C    0200            LDK     A2,0
06103  2F9E    D820            DSK     0,0             CR=0
       2FA0    0000
       2FA2    0000
06104  2FA4    5002            RF(0)   *+4
06105  2FA6    207F            HLT                     WRONG CR
06106  2FA8    A908            ORR     A1,A2
06107  2FAA    5002            RF(0)   *+4
06108  2FAC    207F            HLT                     WRONG RESULT IN A1 OR A2
06109                          *
06110  2FAE    0100            LDK     A1,0
06111  2FB0    02FF            LDK     A2,/FF
06112  2FB2    D820            DSK     0,/F            CR=1
       2FB4    0000
       2FB6    000F
06113  2FB8    5102            RF(1)   *+4
06114  2FBA    207F            HLT                     WRONG CR
06115  2FBC    B108            XRR     A1,A2
06116  2FBE    E920            CWK     A1,/F0          CR=0
       2FC0    00F0
06117  2FC2    5002            RF(0)   *+4
06118  2FC4    207F            HLT                     WRONG RESULT IN A1 OR A2
06119                          *
06120  2FC6    8120            LDKL    A1,/FFFF
       2FC8    FFFF
06121  2FCA    8220            LDKL    A2,/7FFC        (A1,A2=-4)
       2FCC    7FFC
06122  2FCE    D820            DSK     /FFFF,/7FFD     (KL=-3)CR=2
       2FD0    FFFF
       2FD2    7FFD
06123  2FD4    5202            RF(2)   *+4
06124  2FD6    207F            HLT
06125  2FD8    B108            XRR     A1,A2           CR=0
```

```
06126  2FDA  E920          CWK     A1,/8000        CR=0
       2FDC  8000
06127  2FDE  5002          RF(0)   *+4
06128  2FE0  207F          HLT                     WRONG RESULT IN A1 OR A2
06129
06130  2FE2  8120          LDKL    A1,/8000        CR=2
       2FE4  8000
06131  2FE6  0200          LDK     A2,0
06132  2FE8  DB20          DSK     0,1             CR=3
       2FEA  0000
       2FEC  0001
06133  2FEE  5302          RF(3)   *+4
06134  2FF0  207F          HLT                     WRONG CR
06135  2FF2  B108          XRR     A1,A2
06136  2FF4  E920          CWK     A1,0            CR=0
       2FF6  0000
06137  2FF8  5002          RF(0)   *+4
06138  2FFA  207F          HLT                     WRONG RESULT IN A1 OR A2
06139
```

```
06140                          EJECT
06141                  ******************************************************
06142                  *                                                    *
06143                  *       DSR      DOUBLE SUBTRACT REGISTER / REG.     *
06144                  *                                                    *
06145                  ******************************************************
06146                  *
06147                  *       DSR      FORMAT T1   (A1,A2)-(R2,R2+1) TO A1,A2
06148                  ***
06149                  *
06150  2FFC  0155              LDK      A1,/55
06151  2FFE  0255              LDK      A2,/55
06152  3000  0655              LDK      A6,/55
06153  3002  0755              LDK      A7,/55
06154  3004  D818              DSR      A6                  CR=0
06155  3006  5002              RF(0)    *+4
06156  3008  207F              HLT                          WRONG CR
06157  300A  A908              ORR      A1,A2               CR=0
06158  300C  5002              RF(0)    *+4
06159  300E  207F              HLT                          WRONG RESULT IN A1 OR A2
06160                  ***
06161                  *       DSR      FORMAT T3   (A1,A2)-((R2)),(R2+1)) TO A1,A2
06162                  ***
06163                  *
06164  3010  8120              LDKL     A1,/2AAA
       3012  2AAA
06165  3014  0200              LDK      A2,0
06166  3016  80A0              LDKL     A8,VALDSR           CR=1
       3018  2F74  R
06167  301A  D822              DSR*     A8                  CR=0
06168  301C  5002              RF(0)    *+4
06169  301E  207F              HLT                          WRONG CR
06170  3020  A908              ORR      A1,A2               CR=0
06171  3022  5002              RF(0)    *+4
06172  3024  207F              HLT                          WRONG RESULT IN A1 OR A2
06173
```

```
06174                          EJECT
06175                  ****************************************************
06176                  *                                                  *
06177                  *       DS       DOUBLE SUBTRACT                   *
06178                  *                                                  *
06179                  ****************************************************
06180                  *
06181                  *       DS       FORMAT T4   (A1,A2)-(M,M+1) TO A1,A2
06182                  ***
06183                  *
06184  3026  0100             LDK      A1,0
06185  3028  0201             LDK      A2,1
06186  302A  D840             DS       VALDT4                 CR=2
       302C  2F78  R
06187  302E  5202             RF(2)    *+4
06188  3030  207F             HLT                             WRONG CR
06189  3032  8108             XRR      A1,A2
06190  3034  E920             CWK      A1,/8000               CR=0
       3036  8000
06191  3038  5002             RF(0)    *+4
06192  303A  207F             HLT                             WRONG REGISTER
06193                  ***
06194                  *       DS       FORMAT T5   (A1,A2)-(M+(X),M+(X)+1)
06195                  ***                                  TO A1,A2
06196                  *
06197  303C  8220             LDKL     A2,/7FFF               CR=2
       303E  7FFF
06198  3040  8120             LDKL     A1,/FFFF
       3042  FFFF
06199  3044  0708             LDK      A7,8
06200  3046  D85C             DS       VALDT5-8,A7            CR=2
       3048  2F74  R
06201  304A  5202             RF(2)    *+4
06202  304C  207F             HLT                             WRONG CR
06203  304E  8108             XRR      A1,A2
06204  3050  E920             CWK      A1,/8001
       3052  8001
```

```
06205  3054  5002            RF(0)   *+4
06206  3056  207F            HLT                             WRONG REGISTER
06207                  ***
06208                  *       DS      FORMAT T6   (A1,A2)-((M),(M)+1) TO A1,A2
06209                  ***
06210                  *
06211  3058  8220            LDKL    A2,/7F00
       305A  7F00
06212  305C  8120            LDKL    A1,/FFFF                CR=2
       305E  FFFF
06213  3060  D860            DS*     INDST6                  CR=2
       3062  2F88  R
06214  3064  5202            RF(2)   *+4
06215  3066  207F            HLT                             WRONG CR
06216  3068  8108            XRR     A1,A2                   CR=0
06217  306A  E920            CWK     A1,/80FE                CR=0
       306C  80FE
06218  306E  5002            RF(0)   *+4
06219  3070  207F            HLT                             WRONG RESULT
06220                  ***
06221                  *       DS      FORMAT T7   (A1,A2)-((M+(X)),(M+(X)+1)
06222                  ***                                     TO A1,A2
06223                  *
06224  3072  8120            LDKL    A1,/5A5A
       3074  5A5A
06225  3076  8220            LDKL    A2,/5A5A                CR=1
       3078  5A5A
06226  307A  0602            LDK     A6,2
06227  307C  D878            DS*     INDST7-2,A6             CR=0
       307E  2F88  R
06228  3080  5002            RF(0)   *+4
06229  3082  207F            HLT                             WRONG CR
06230  3084  8108            XRR     A1,A2                   CR=0
06231  3086  501C            RF(Z)   MVFT8
06232  3088  207F            HLT                             WRONG RESULT
06233
06234  308A  5718            RF      MVFT8
```

```
06235                          EJECT
06236                     ******************************************************
06237                     *                                                    *
06238                     *                  OPERATION  CODE 14                *
06239                     *                                                    *
06240                     ******************************************************
06241                     *
06242          308C       TABEM    EQU      *
06243  308C    F000                DATA     /F000
06244  308E    0F00                DATA     /0F00
06245  3090    00F0                DATA     /00F0
06246  3092    000F                DATA     /000F
06247          3094       TABRE    EQU      *
06248  3094                       RES      4
06249          309C       MVFRZ    EQU      *
06250  309C    0000                DATA     0
06251  309E    0000                DATA     0
06252  30A0    0000                DATA     0
06253  30A2    0000                DATA     0
06254                     *
06255                     ******************************************************
06256                     *                                                    *
06257                     *        MVF       MOVE TABLE FORWARD                *
06258                     *                                                    *
06259                     ******************************************************
06260                     *
06261                     *        MVF       FORMAT T8   (A1,A2)=UNCHANGED ; (R2) UPDATED
06262                     ***                              R2-2 TO R2 ;((A1+R2)) TO (A2+R2)
06263                     *                                0 TO R2 ; ((A1)) TO (A2)
06264          30A4       MVFT8    EQU      *
06265  30A4    BA40                ML       4,MVFRZ
       30A6    309C  R
06266  30A8    BA41                MS       4,TABRE
       30AA    3094  R
06267  30AC    A120                LDKL     A1,TABEM
       30AE    308C  R
06268  30B0    A220                LDKL     A2,TABRE              CR=1
```

```
                30B2  3094  R
06269           30B4  0300        LDK     A3,0            LONG = 0
06270           30B6  700C        MVF     A3
06271           30B8  5102        RF(1)   *+4
06272           30BA  207F        HLT                     WRONG CR
06273           30BC  BA40        ML      4,TABRE
                30BE  3094  R
06274           30C0  B108        XRR     A1,A2
06275           30C2  E920        CWK     A1,0
                30C4  0000
06276           30C6  5002        RF(0)   *+4
06277           30C8  207F        HLT                     WRONG MVF
06278                       *
06279           30CA  BA40        ML      4,MVFRZ
                30CC  309C  R
06280           30CF  BA41        MS      4,TABRE
                30D0  3094  R
06281           30D2  8120        LDKL    A1,TABFM        STARTING ADDRESS EMITTING BUFFER
                30D4  308C  R
06282           30D6  8220        LDKL    A2,TABRE        STARTING ADDRESS RECEIVING BUFFER
                30D8  3094  R
06283           30DA  0308        LDK     A3,8
06284           30DC  700C        MVF     A3
06285           30DE  5102        RF(1)   *+4
06286           30E0  207F        HLT                     WRONG CR
06287           30E2  BA40        ML      4,TABRE
                30E4  3094  R
06288           30E6  B108        XRR     A1,A2
06289           30C8  B10C        XRR     A1,A3
06290           30EA  B110        XRR     A1,A4
06291           30EC  E920        CWK     A1,/FFFF        CR=0
                30EE  FFFF
06292           30F0  5002        RF(0)   *+4
06293           30F2  207F        HLT                     WRONG RESULT
06294           30F4  EC20        CWK     A4,/F
                30F6  000F
06295           30F8  5002        RF(0)   *+4
```

```
06296  30FA  207F          HLT                    WRONG MVF
06297
```

```
06298                          EJECT
06299                    ****************************************************
06300                    *                                                  *
06301                    *                  OPERATION   CODE 15             *
06302                    *                                                  *
06303                    ****************************************************
06304                    *
06305                    ****************************************************
06306                    *                                                  *
06307                    *        MVB       MOVE TABLE BACKWARD             *
06308                    *                                                  *
06309                    ****************************************************
06310                    *
06311                    *        MVB       FORMAT T8   ((A1)) TO (A2)
06312                    ***                            R2-2 TO R2 ; (A1)+2 TO A1
06313                    *                                           (A2)+2 TO A2
06314                    *                              ((A1)) TO (A2)
06315                    *                              ------------------------
06316                    *                              0 TO R2 ;(A1)+2 TO A1
06317                    *                                      (A2)+2 TO A2
06318                    *                                      ((A1)) TO (A2)
06319                    *
06320          30FC      MVRT8    EQU       *
06321  30FC    BA40               ML        4,MVFRZ
       30FE    309C  R
06322  3100    BA41               MS        4,TABRE
       3102    3094  R
06323  3104    8120               LDKL      A1,TABEM                 EMITTER
       3106    30BC  R
06324  3108    8220               LDKL      A2,TABRE                 CR=1,RECEIVER
       310A    3094  R
06325  310C    0400               LDK       A4,0                     LONG=0
06326  310E    7810               MVB       A4
06327  3110    5102               RF(1)     *+4
06328  3112    207F               HLT                                WRONG CR
06329  3114    BA40               ML        A4,TABRE
       3116    3094  R
```

```
06330  3118  B108          XRR     A1,A2
06331  311A  E920          CWK     A1,0
       311C  0000
06332  311E  5002          RF(0)   *+4
06333  3120  207F          HLT                     WRONG MVB
06334                  *
06335  3122  BA40          ML      4,MVFRZ
       3124  309C  R
06336  3126  BA41          MS      4,TABRE
       3128  3094  R
06337  312A  8120          LDKL    A1,TABEM        EMITTER
       312C  30BC  R
06338  312E  8220          LDKL    A2,TABRE        CR=1,RECEIVER
       3130  3094  R
06339  3132  0408          LDK     A4,8
06340  3134  7810          MVB     A4
06341  3136  5102          RF(1)   *+4
06342  3138  207F          HLT                     WRONG CR
06343  313A  BA40          ML      4,TABRE
       313C  3094  R
06344  313E  B108          XRR     A1,A2
06345  3140  B10C          XRR     A1,A3
06346  3142  B110          XRR     A1,A4
06347  3144  E920          CWK     A1,/FFFF        CR=0
       3146  FFFF
06348  3148  5002          RF(0)   *+4
06349  314A  207F          HLT                     WRONG RESULT
06350  314C  EC20          CWK     A4,/F
       314E  000F
06351  3150  5002          RF(0)   *+4
06352  3152  207F          HLT                     WRONG MVB
06353  3154  8F20          ABL     MUKT2
       3156  3166  R
06354
```

```
06355                          EJECT
06356                    ******************************************************
06357                    *                                                    *
06358                    *                                                    *
06359                    *                  OPERATION   CODE 8                *
06360                    ******************************************************
06361                    *
06362  3158  FFFF        VAMUR1   DATA     /FFFF
06363  315A  8000        VAMUR2   DATA     /8000
06364  315C  4000        VAMUR3   DATA     /4000
06365  315E  7FFF        VAMUR4   DATA     /7FFF
06366  3160  0000        VAMUR5   DATA     0
06367  3162  3158  R     INMUT6   DATA     VAMUR1
06368  3164  315A  R     INMUT7   DATA     VAMUR2
06369                    *
06370                    ******************************************************
06371                    *                                                    *
06372                    *        MUK       MULTIPLY WITH CONSTANT            *
06373                    *                                                    *
06374                    ******************************************************
06375                    *
06376                    *        MUK       FORMAT T2   (A2) X (KL) TO A1-A2
06377                    ***
06378                    *
06379          3166      MUKT2    EQU       *
06380  3166  0200                LDK       A2,0
06381  3168  C020                MUK       0                    CR=0 (A2=0) X (KL=0) = 0
       316A  0000
06382  316C  5002                RF(0)     *+4
06383  316E  207F                HLT                            WRONG CR
06384  3170  B108                XRR       A1,A2                CR=0
06385  3172  5002                RF(0)     *+4
06386  3174  207F                HLT                            WRONG RESULT IN A1 OR A2
06387                    *
06388  3176  02FF                LDK       A2,/FF
06389  3178  C020                MUK       0                    CR=0,(A2=/FF)X(KL=0)= 0
       317A  0000
```

```
06390  317C  5002          RF(0)   *+4
06391  317E  207F          HLT                     WRONG CR
06392  3180  B108          XRR     A1,A2           CR=0
06393  3182  5002          RF(0)   *+4
06394  3184  207F          HLT                     WRONG RESULT IN A1 OR A2
06395                  *
06396  3186  8220          LDKL    A2,/FFFF        CR=2
       3188  FFFF
06397  318A  C020          MUK     0               CR=0,(A2=/FFFF)X(KL=0)=0
       318C  0000
06398  318E  5002          RF(0)   *+4
06399  3190  207F          HLT                     WRONG CR
06400  3192  B108          XRR     A1,A2           CR=0
06401  3194  5002          RF(0)   *+4
06402  3196  207F          HLT                     WRONG RESULT IN A1 OR A2
06403                  *
06404  3198  0200          LDK     A2,0
06405  319A  C020          MUK     /FF             CR=0,(A2=0)X(KL=/FF)=0
       319C  00FF
06406  319E  5002          RF(0)   *+4
06407  31A0  207F          HLT                     WRONG CR
06408  31A2  B108          XRR     A1,A2           CR=0
06409  31A4  5002          RF(0)   *+4
06410  31A6  207F          HLT
06411                  *                   WRONG RESULT IN A1 OR A2
06412  31A8  0200          LDK     A2,0
06413  31AA  C020          MUK     /FFFF           CR=0,(A2=0)X(KL=/FFFF)=0
       31AC  FFFF
06414  31AE  5002          RF(0)   *+4
06415  31B0  207F          HLT                     WRONG CR
06416  31B2  B108          XRR     A1,A2           CR=0
06417  31B4  5002          RF(0)   *+4
06418  31B6  207F          HLT                     WRONG RESULT IN A1 OR A2
06419                  *
06420  31B8  8220          LDKL    A2,/7FFF        CR=1
       31BA  7FFF
06421  31BC  C020          MUK     1               CR=1
```

```
                31BE  0001
06422           31C0  5102          RF(1)   *+4
06423           31C2  207F          HLT                     WRONG CR
06424           31C4  E920          CWK     A1,0            CR=0
                31C6  0000
06425           31C8  5002          RF(0)   *+4
06426           31CA  207F          HLT                     WRONG RESULT IN A1
06427           31CC  EA20          CWK     A2,/7FFF        CR=0
                31CE  7FFF
06428           31D0  5002          RF(0)   *+4
06429           31D2  207F          HLT                     WRONG RESULT IN A2
06430                         *
06431           31D4  8220          LDKL    A2,/4000
                31D6  4000
06432           31D8  C020          MUK     2               CR=1
                31DA  0002
06433           31DC  5102          RF(1)   *+4
06434           31DE  207F          HLT                     WRONG CR
06435           31E0  E920          CWK     A1,1            CR=0
                31E2  0001
06436           31E4  5002          RF(0)   *+4
06437           31E6  207F          HLT                     WRONG RESULT IN A1
06438           31E8  EA20          CWK     A2,0            CR=0
                31EA  0000
06439           31EC  5002          RF(0)   *+4
06440           31EE  207F          HLT                     WRONG RESULT IN A2
06441                         *
06442           31F0  8220          LDKL    A2,/FFFF
                31F2  FFFF
06443           31F4  C020          MUK     2               CR=2
                31F6  0002
06444           31F8  5202          RF(2)   *+4
06445           31FA  207F          HLT                     WRONG CR
06446           31FC  E920          CWK     A1,/FFFF        CR=0
                31FE  FFFF
06447           3200  5002          RF(0)   *+4
06448           3202  207F          HLT                     WRONG RESULT IN A1
```

```
06449  3204  EA20          CWK     A2,/7FFE          CR=0
       3206  7FFE
06450  3208  5002          RF(0)   *+4
06451  320A  207F          HLT                       WRONG RESULT IN A2
06452                *
06453  320C  8220          LDKL    A2,/8000          CR=2
       320E  8000
06454  3210  C020          MUK     /8000             CR=3
       3212  8000
06455  3214  5302          RF(3)   *+4
06456  3216  207F          HLT                       WRONG CR
06457
```

```
06458                          EJECT
06459                  ***************************************************
06460                  *                                                 *
06461                  *       MUR     MULTIPLY REGISTER / REGISTER      *
06462                  *                                                 *
06463                  ***************************************************
06464                  *
06465                  *       MUR     FORMAT T1   (A2) X (R2) TO A1-A2
06466                  ***
06467  3218  0300              LDK     A3,0
06468  321A  0200              LDK     A2,0
06469  321C  C00C              MUR     A3                  CR=0
06470  321E  5002              RF(0)   *+4
06471  3220  207F              HLT                         WRONG CR
06472  3222  B108              XRR     A1,A2               CR=0
06473  3224  5002              RF(0)   *+4
06474  3226  207F              HLT                         WRONG RESULT IN A1 OR A2
06475                  *
06476  3228  8720              LDKL    A7,/7FFF            CR=1
       322A  7FFF
06477  322C  0201              LDK     A2,1
06478  322E  C01C              MUR     A7                  CR=1
06479  3230  5102              RF(1)   *+4
06480  3232  207F              HLT                         WRONG CR
06481  3234  EA20              CWK     A2,/7FFF            CR=0
       3236  7FFF
06482  3238  5002              RF(0)   *+4
06483  323A  207F              HLT                         WRONG CR
06484  323C  E920              CWK     A1,0
       323E  0000
06485  3240  5002              RF(0)   *+4
06486  3242  207F              HLT                         WRONG CONTENT IN A1 OR A2
06487                  ***
06488                  *       MUR     FORMAT T3   (A2) X ((R2)) TO A1-A2
06489                  ***
06490  3244  0202              LDK     A2,2
06491  3246  8620              LDKL    A6,VAMUR1           CR=1
```

```
        3248  3158  R
06492   324A  C038        MUR*    A6              CR=2
06493   324C  5202        RF(2)   *+4
06494   324E  207F        HLT                     WRONG CR
06495   3250  B108        XRR     A1,A2
06496   3252  E920        CWK     A1,/8001        CR=0
        3254  8001
06497   3256  5002        RF(0)   *+4
06498   3258  207F        HLT                     WRONG RESULT IN A1 OR A2
06499                   *
06500   325A  8520        LDKL    A5,VAMUR2       CR=1
        325C  315A  R
06501   325E  8220        LDKL    A2,/8000        CR=2
        3260  8000
06502   3262  C034        MUR*    A5              CR=3
06503   3264  5302        RF(3)   *+4
06504   3266  207F        HLT                     WRONG CR
06505
```

```
06506                          EJECT
06507                  ****************************************************
06508                  *                                                  *
06509                  *       MU       MULTIPLY                          *
06510                  *                                                  *
06511                  ****************************************************
06512                  *
06513                  *       MU       FORMAT T4   (A2) X (M) TO A1-A2
06514                  ***
06515                  *
06516  3268  8220             LDKL     A2,/7FFF              CR=1
       326A  7FFF
06517  326C  C040             MU       VAMUR5                CR=0
       326E  3160  R
06518  3270  5002             RF(0)    *+4
06519  3272  207F             HLT                            WRONG CR
06520  3274  8108             XRR      A1,A2                 CR=0
06521  3276  5002             RF(0)    *+4
06522  3278  207F             HLT                            WRONG RESULT IN A1 OR A2
06523                  ***
06524                  *       MU       FORMAT T5   (A2) X (M+(X)) TO A1-A2
06525                  ***
06526                  *
06527  327A  0106             LDK      A1,6
06528  327C  0201             LDK      A2,1
06529  327E  C044             MU       VAMUR4-6,A1           CR=1
       3280  3158  R
06530  3282  5102             RF(1)    *+4
06531  3284  207F             HLT                            WRONG CR
06532  3286  8108             XRR      A1,A2
06533  3288  E920             CWK      A1,/7FFF              CR=0
       328A  7FFF
06534  328C  5002             RF(0)    *+4
06535  328E  207F             HLT                            WRONG RESULT IN A1 OR A2
06536                  ***
06537                  *       MU       FORMAT T6   (R2) X ((M)) TO A1-A2
06538                  ***
```

```
06539                                  *
06540  3290  0202                      LDK     A2,2
06541  3292  C060                      MIA     INMUT6              CR=2
       3294  3162  R
06542  3296  5202                      RF(2)   *+4
06543  3298  207F                      HLT                         WRONG CR
06544  329A  B108                      XRR     A1,A2
06545  329C  E920                      CWK     A1,/8001            CR=0
       329E  8001
06546  32A0  5002                      RF(0)   *+4
06547  32A2  207F                      HLT
```

```
06548                          EJECT
06549                  ***
06550                  *       MU      FORMAT T7   (R2) X ((M+(X))) TO A1-A2
06551                  ***
06552                  *
06553  32A4  0108             LDK     A1,8
06554  32A6  8220             LDKL    A2,/8000                CR=2
       32A8  8000
06555  32AA  C064             MU*     INMUT7-8,A1             CR=3
       32AC  315C  R
06556  32AF  5326             RF(3)   TEMUL
06557  32B0  207F             HLT                             WRONG CR
06558
```

```
06559                          EJECT
06560                  ********************************************************
06561                  *                                                      *
06562                  *        COMPLETE MULTIPLICATION TEST                  *
06563                  *                                                      *
06564                  ********************************************************
06565                  *
06566                  *
06567                  *
06568  32B2  0000      AND       DATA    0
06569  32B4  0000                DATA    0
06570  32B6  0000      TYAND     DATA    0
06571  32B8  0000      XAND      DATA    0
06572  32BA  0000      DIVFLA    DATA    0
06573  32BC  0000      DOUBLE    DATA    0
06574  32BE  0000      END       DATA    0
06575  32C0  0000      EUR       DATA    0
06576  32C2  0000      TYEUR     DATA    0
06577  32C4  0000      XEUR      DATA    0
06578  32C6  0000      OPER      DATA    0
06579  32C8  0000                DATA    0
06580  32CA  0000      TYOPER    DATA    0
06581  32CC  0000      XOPER     DATA    0
06582                  *
06583  32CE  0000      SIRES     DATA    0
06584  32D0  0000                DATA    0
06585                  *
06586  32D2  0000      RES       DATA    0
06587  32D4  0000                DATA    0
06588                  *
06589                  *
06590                  *
06591        32D6      TEMUL     EQU     *
06592  32D6  0300                LDK     A3,0
06593  32D8  8341                ST      A3,DIVFLA           0 IN DIVIDF FLAG
       32DA  32BA  R
06594  32DC  8420      LTYAND    LDKL    A4,/FFFF            (-1)
```

```
                32DE  FFFF
06595           32E0  8441              ST      A4,TYAND
                32E2  32B6  R
06596                 32E4        LDXAND  EQU     *
06597           32E4  0500              LDK     A5,0
06598           32E6  8541              ST      A5,XAND
                32E8  32B8  R
06599                 32EA        PARAM1  EQU     *
06600           32EA  8640              LD      A6,TYAND
                32EC  32B6  R
06601           32EE  8641              ST      A6,TYOPER
                32F0  32CA  R
06602           32F2  8740              LD      A7,XAND
                32F4  32B8  R
06603           32F6  8741              ST      A7,XOPER
                32F8  32CC  R
06604           32FA  80C0              LD      A8,DIVFLA
                32FC  32BA  R
06605           32FE  80C1              ST      A8,DOUBLE
                3300  32BC  R
06606           3302  8940              ML      2,AND
                3304  32B2  R
06607           3306  8941              MS      2,OPER
                3308  32C6  R
06608           330A  86A0              LDKL    A14,/120
                330C  0120
06609           330E  F6A1              CF      A14,NEWOP
                3310  33E8  R
06610                       *
06611           3312  8340              LD      A3,END
                3314  32BE  R
06612           3316  500E              RF(0)   PARAM2
06613           3318  8440              LD      A4,TYAND
                331A  32B6  R
06614           331C  8920              ABL(1)  TESDIV
                331E  34D0  R
06615           3320  9041              IM      TYAND
```

```
        3322  3286  R
06616   3324  5F42                RB(7)   LDXAND
06617                       *
06618         3326          PARAM2  EQU     *
06619   3326  8940                ML      2,OPER
        3328  32C6  R
06620   332A  8941                MS      2,AND
        332C  32B2  R
06621   332E  8640                LD      A6,XOPER
        3330  32CC  R
06622   3332  8641                ST      A6,XAND
        3334  32B8  R
06623   3336  8720                LDKL    A7,/FFFF            (-1)
        3338  FFFF
06624   333A  8741                ST      A7,TYEUR
        333C  32C2  R
06625         333E          LDXEUR  EQU     *
06626   333E  0300                LDK     A3,0
06627   3340  8341                ST      A3,XEUR
        3342  32C4  R
06628                       *
06629         3344          PARAM3  EQU     *
06630   3344  8440                LD      A4,TYEUR
        3346  32C2  R
06631   3348  8441                ST      A4,TYOPER
        334A  32CA  R
06632   334C  8540                LD      A5,XEUR
        334E  32C4  R
06633   3350  8541                ST      A5,XOPER
        3352  32CC  R
06634   3354  8640                LD      A6,EUR
        3356  32C0  R
06635   3358  8641                ST      A6,OPER
        335A  32C6  R
06636   335C  0700                LDK     A7,0
06637   335F  8741                ST      A7,DOUBLE
        3360  32BC  R
```

```
06638  3362  86A0          LDKL    A14,/120
       3364  0120
06639  3366  F6A1          CF      A14,NEWOP
       3368  33E8  R
06640                *
06641  336A  8340          LD      A3,END
       336C  32BE  R
06642  336E  5012          RF(0)   PARAM4
06643  3370  8440          LD      A4,TYEUR
       3372  32C2  R
06644  3374  5506          RF(5)   ITYEUR
06645  3376  9041          IM      XAND
       3378  32B8  R
06646  337A  5F92          RB(7)   PARAM1
06647        337C     ITYEUR  EQU   *
06648  337C  9041          IM      TYEUR
       337E  32C2  R
06649  3380  5F44          RB(7)   LDXEUR
06650                *
06651        3382     PARAM4  EQU   *
06652  3382  8540          LD      A5,OPER
       3384  32C6  R
06653  3386  8541          ST      A5,EUR
       3388  32C0  R
06654  338A  8640          LD      A6,XOPER
       338C  32CC  R
06655  338E  8641          ST      A6,XEUR
       3390  32C4  R
06656                *
06657  3392  8740          LD      A7,DIVFLA       DIVIDE TEST?
       3394  328A  R
06658  3396  8920          ABL(1)  ESDIV           YES
       3398  35EE  R
06659                *                       NO = MULTIPLY TEST
06660  339A  84A0          LDKL    A12,/160
       339C  0160
06661  339E  85A0          LDKL    A13,/150
```

```
                33A0  0150
06662           33A2  8240              LD        A2,AND
                33A4  32B2  R
06663           33A6  C040              MU        EUR
                33A8  32C0  R
06664           33AA  8941              MS        2,RES
                33AC  32D2  R
06665           33AE  F4A1              CF        A12,SIMU
                33B0  342F  R
06666                       *
06667           33B2  8420              LDKL      A4,/300
                33B4  0300
06668           33B6  8520              LDKL      A5,/300
                33B8  0300
06669           33BA  A440              AN        A4,/150-2
                33BC  014E
06670           33BE  A540              AN        A5,/160-2
                33C0  015E
06671           33C2  EC20              CWK       A4,/300             CR=3 ?
                33C4  0300
06672           33C6  5406              RF(4)     TESCR               NO
06673           33C8  EC14              CWR       A4,A5               YES
06674           33CA  5014              RF(0)     IXEUR               EQUAL
06675                       ***
06676           33CC  207F              HLT                           WRONG CR FOR OVERFLOW
06677                       ***
06678                       *
06679                 33CE  TESCR       EQU       *
06680           33CE  EC14              CWR       A4,A5
06681           33D0  5002              RF(0)     TESRES
06682                       ***
06683           33D2  207F              HLT                           WRONG CR MULTIPLY
06684                       ***
06685                       *
06686                 33D4  TESRES      EQU       *
06687           33D4  8940              ML        2,SIRES
                33D6  32CE  R
```

```
06688  33D8  D840          DS      RES
       33DA  32D2  R
06689  33DC  5002          RF(0)   IXEUR
06690                ***
06691  33DE  207F          HLT                    WRONG RESULT IN MULTIPLY
06692                ***
06693                *
06694        33F0    IXEUR EQU     *
06695  33E0  9041          IM      XEUR
       33E2  32C4  R
06696  33E4  8F20          ABL(7)  PARAM3
       33E6  3344  R
06697
```

```
06698                          EJECT
06699                    ***
06700                    *     MULTIPLICAND AND MULTIPLIER
06701                    *
06702                    *           COMPUTATION ROUTINE
06703                    ***
06704                    *
06705          33F8      NEWOP  EQU   *
06706  33F8    8340            LD    A3,XOPER
       33FA    32CC  R
06707  33FC    5420            RF(4) NEWOP1
06708  33FE    0101            LDK   A1,1
06709  3400    0200            LDK   A2,0
06710  3402    8340            LD    A3,TYOPER
       3404    32CA  R
06711  3406    5502            RF(5) TESDOU
06712  3408    1902            SUK   A1,2
06713          33FA      TESDOU EQU   *
06714  33FA    8440            LD    A4,DOUBLE
       33FC    32BC  R
06715  33FE    5002            RF(0) LOPER
06716  3400    382F            DRA   15
06717          3402      LOPER  EQU   *
06718  3402    8941            MS    2,OPER
       3404    32C6  R
06719          3406      LODEND EQU   *
06720  3406    0500            LDK   A5,0
06721  3408    8541            ST    A5,END
       340A    32BE  R
06722          340C      EXIMUL EQU   *
06723  340C    F03A            RTN   A14
06724                    *
06725          340F      NEWOP1 EQU   *
06726  340E    8940            ML    2,OPER
       3410    32C6  R
06727  3412    3801            DLA   1
06728  3414    5310            RF(3) LDEND1              OVERFLOW
```

```
06729  3A16  8640          LD      A6,TYOPER
       3A18  32CA  R
06730  3A1A  5C1A          RB(4)   LOPER
06731  3A1C  A941          ORS     A1,OPER
       3A1E  32C6  R
06732  3A20  AA41          ORS     A2,OPER+2
       3A22  32C8  R
06733  3A24  5F20          RB(7)   LODEND
06734        3A26    LDEND1 EQU    *
06735  3A26  9041          IM      END
       3A28  32BE  R
06736  3A2A  5F20          RB(7)   EXIMUL
06737                 *
06738                 *
06739        3A2C    SCR     EQU    *
06740  3A2C  F036          RTN     A13
06741
```

```
06742                                EJECT
06743                          ***
06744                          *     SIMULATED COMPUTATION OF MULTIPLICATION
06745                          ***                 ROUTINE
06746                          *
06747          342F      SIMU  EQU   *
06748  342E    8340            LD    A3,TYAND
       3430    32B6  R
06749  3432    561E            RF(6) TESIM
06750  3434    8140            LD    A1,EUR
       3436    32C0  R
06751  3438    382F            DRA   15
06752          343A      LEXRES EQU  *
06753  343A    8340            LD    A3,XAND
       343C    32B8  R
06754          343E      CALSIR EQU  *
06755  343E    9320            ADKL  A3,/3800
       3440    3800
06756  3442    8341            ST    A3,SHSIR
       3444    3446  R
06757          3446      SHSIR EQU   *
06758  3446                    RES   1                    DLA
06759          3448      STOVF EQU   *
06760  3448    8941            MS    2,SIRES
       344A    32CE  R
06761  344C    F5A1            CF    A13,SCR
       344E    342C  R
06762  3450    F032            RTN   A12
06763                          *
06764          3452      TESIM EQU   *
06765  3452    8440            LD    A4,TYEUR
       3454    32C2  R
06766  3456    500E            RF(0) TTYAND
06767  3458    5154            RF(1) TSIRES
06768  345A    8140            LD    A1,AND
       345C    32B2  R
06769  345E    382F            DRA   15
```

```
06770          3460        LEXRE1  EQU     *
06771  3460    8340                LD      A3,XEUR
       3462    32C4  R
06772  3464    5F28                RB(7)   CALSIR
06773                      *
06774          3466        TTYAND  EQU     *
06775  3466    8440                LD      A4,TYAND
       3468    32B6  R
06776  346A    5514                RF(5)   CAMUB
06777  346C    8140                LD      A1,EUR
       346E    32C0  R
06778  3470    382F                DRA     15
06779  3472    8941                MS      2,SIRES
       3474    32CF  R
06780  3476    0100                LDK     A1,0
06781  3478    0200                LDK     A2,0
06782  347A    D840                DS      SIRES
       347C    32CE  R
06783  347E    5F06                RB(7)   LEXRES
06784                      *
06785          3480        CAMUB   EQU     *
06786  3480    0101                LDK     A1,1
06787  3482    382F                DRA     15
06788  3484    0302                LDK     A3,2
06789  3486    9340                AD      A3,XAND
       3488    32B8  R
06790  348A    9340                AD      A3,XEUR
       348C    32C4  R
06791  348E    9320                ADKL    A3,/3800
       3490    3800
06792  3492    8341                ST      A3,SHSIRE
       3494    3496  R
06793          3496        SHSIRE  EQU     *
06794  3496                        RES     1                       DLA
06795  3498    0400                LDK     A4,0
06796  349A    8540                LD      A5,AND
       349C    32B2  R
```

```
06797  3A9E  0810          DSR     A4
06798  3AA0  8540          LD      A5,EUR
       3AA2  32C0  R
06799  3AA4  0810          DSR     A4
06800  3AA6  0820          DSK     0,1
       3AA8  0000
       3AAA  0001
06801  3AAC  5F66          RB(7)   STOVF
06802                  *
06803        3AAE    TSIRES  EQU     *
06804  3AAE  8140          LD      A1,AND
       3AB0  32B2  R
06805  3AB2  382F          DRA     15
06806  3AB4  8941          MS      2,SIRES
       3AB6  32CE  R
06807  3AB8  0100          LDK     A1,0
06808  3ABA  0200          LDK     A2,0
06809  3ABC  D840          DS      SIRES
       3ABE  32CF  R
06810  3AC0  5F62          RB(7)   LEXRE1
06811
```

```
                                EJECT
                *********************************** ********************
                *                                                      *
                *                    OPERATION   CODE 9                *
                *                                                      *
                ********************************************************
                *
06A19  3AC2 0000    VALDVR  DATA    0
06A20  3AC4 7FFF    VALDV1  DATA    /7FFF
06A21  3AC6 C000    VALDV2  DATA    /C000
06A22  3AC8 F000    VALDV3  DATA    /F000
06A23  3ACA 0001    VALDV4  DATA    1
06A24  3ACC 3AC8 R  INDV1   DATA    VALDV3
06A25  3ACE 3ACA R  INDV2   DATA    VALDV4
06A26               *
06A27               ********************************************************
06A28               *                                                      *
06A29               *       DVK       DIVIDE WITH CONSTANT               *
06A30               *                                                      *
06A31               ********************************************************
06A32               *
06A33       3AD0    TESDIV  EQU     *
06A34  3AD0 8140            LD      A1,DIVFLA
       3AD2 32BA R
06A35  3AD4 8920            ABL(1)  ENDIVI
       3AD6 36E0 R
06A36  3AD8 9041            IM      DIVFLA
       3ADA 32BA R
06A37  3ADC 5700            RF(7)   DVKT2
06A38               ***
06A39               *       DVK     FORMAT T2   (A1,A2)/KL TO A2 (QUOTIENT)
06A40               *
06A41               ***                                     A1 (REMAINDER)
06A42       3ADE    DVKT2   EQU     *
06A43  3ADE 0100            LDK     A1,0
06A44  3AE0 0201            LDK     A2,1
06A45  3AE2 8320            LDKL    A3,/8000            CR=2
```

```
                 34E4  8000
06846            34E6  C820          DVK     2                 CR=0
                 34E8  0002
06847            34EA  5002          RF(0)   *+4
06848            34EC  207F          HLT                       WRONG CR
06849            34EE  E920          CWK     A1,1              CR=0
                 34F0  0001
06850            34F2  5002          RF(0)   *+4
06851            34F4  207F          HLT                       WRONG REMAINDER
06852            34F6  EA20          CWK     A2,0              CR=0
                 34F8  0000
06853            34FA  5002          RF(0)   *+4
06854            34FC  207F          HLT                       WRONG QUOTIENT
06855                              *
06856                              *                            18
06857            34FE  8220          LDKL    A2,/7FFF          (A1,A2 = -2  -1)
                 3500  7FFF
06858            3502  8120          LDKL    A1,/FFF7          CR=2    14
                 3504  FFF7
06859            3506  C820          DVK     /C000             CR=1 (-2  )
                 3508  C000
06860            350A  5102          RF(1)   *+4
06861            350C  207F          HLT                       WRONG CR
06862            350E  E920          CWK     A1,/FFFF          (-1),CR=0
                 3510  FFFF
06863            3512  5002          RF(0)   *+4
06864            3514  207F          HLT                       WRONG REMAINDER
06865            3516  EA20          CWK     A2,/10
                 3518  0010
06866            351A  5002          RF(0)   *+4
06867            351C  207F          HLT                       WRONG QUOTIENT
06868                              *                           20
06869            351E  0120          LDK     A1,/20            (A1,A2= 2  )
06870            3520  0200          LDK     A2,0              12
06871            3522  C820          DVK     /F000             CR=2 ,(-2  )
                 3524  F000
06872            3526  5202          RF(2)   *+4
```

```
06873  3528  207F          HLT                     WRONG CR
06874  352A  E920          CWK     A1,0            CR=0
       352C  0000
06875  352E  5002          RF(0)   *+4
06876  3530  207F          HLT                     WRONG REMAINDER   8
06877  3532  EA20          CWK     A2,/FF00        CR=0            (-2 )
       3534  FF00
06878  3536  5002          RF(0)   *+4
06879  3538  207F          HLT                     WRONG QUOTIENT
06880
06881  353A  8120          LDKL    A1,/7FFF        (A1,A2= 2  -1)
       353C  7FFF
06882  353E  8220          LDKL    A2,/7FFF        CR=1
       3540  7FFF
06883  3542  C820          DVK     1               CR=3
       3544  0001
06884  3546  5302          RF(3)   *+4
06885  3548  207F          HLT                     WRONG CR
06886
```

```
06887                          EJECT
06888                  ********************************************************
06889                  *                                                      *
06890                  *       DVR      DIVIDE REGISTERS / REGISTER           *
06891                  *                                                      *
06892                  ********************************************************
06893                  *
06894                  *       DVR      FORMAT T1   (A1,A2) / (R2) TO A1 REMAINDER
06895                  ***                                          A2 QUOTIENT
06896                  *
06897  3549  0100               LDK      A1,0
06898  354C  8220               LDKL     A2,/7FFE
       354E  7FFE
06899  3550  8320               LDKL     A3,/7FFF                 CR=1
       3552  7FFF
06900  3554  C80C               DVR      A3                       CR=0
06901  3556  5002               RF(0)    *+4
06902  3558  207F               HLT                               WRONG CR
06903  355A  8108               XRR      A1,A2
06904  355C  E920               CWK      A1,/7FFE                 CR=0
       355E  7FFE
06905  3560  5002               RF(0)    *+4
06906  3562  207F               HLT                               WRONG REMAINDER OR QUOTIENT
06907                  *
06908  3564  0101               LDK      A1,1
06909  3566  0200               LDK      A2,0
06910  3568  0702               LDK      A7,2                     CR=1
06911  356A  C81C               DVR      A7
06912  356C  5102               RF(1)    *+4
06913  356E  207F               HLT                               WRONG CR
06914  3570  8108               XRR      A1,A2
06915  3572  E920               CWK      A1,/4000                 CR=0
       3574  4000
06916  3576  5002               RF(0)    *+4
06917  3578  207F               HLT                               WRONG REMAINDER OR QUOTIENT
06918                  ***
06919                  *       DVR      FORMAT T3   (A1,A2) / ((R2)) TO A1 REMAINDER
```

```
06920                    ***                                    A2 QUOTIENT
06921                    *
06922  357A  8220               LDKL    A2,/7FFF               (A1,A2=-1)
       357C  7FFF
06923  357E  8120               LDKL    A1,/FFFF
       3580  FFFF
06924  3582  8320               LDKL    A3,VALDVR              CR=1
       3584  3402  R
06925  3586  C82C               DVR*    A3                     CR=3
06926  3588  5302               RF(3)   *+4
06927  358A  207F               HLT                            WRONG CR
06928
```

```
06929                          EJECT
06930                  ********************************************************
06931                  *                                                      *
06932                  *       DV       DIVIDE                                *
06933                  *                                                      *
06934                  ********************************************************
06935                  *
06936                  *       DV       FORMAT T4   (A1,A2) / (M) TO A1 REMAINDER
06937                  ***                                        A2 QUOTIENT
06938                  *
06939  3580  0100               LDK      A1,0
06940  3582  0201               LDK      A2,1
06941  3584  C840               DV       VALDV1              CR=0
       3586  3BC4  R
06942  3588  5002               BF(0)    *+4
06943  358A  207F               HLT                          WRONG CR
06944  358C  B108               XRR      A1,A2
06945  358E  E920               CWK      A1,1                CR=0
       3590  0001
06946  3592  5002               BF(0)    *+4
06947                  ***
06948  3594  207F               HLT                          WRONG REMAINDER OR QUOTIENT
06949                  ***
06950                  *
06951                  *       DV       FORMAT T5   (A1,A2) / (M+(X)) TO A1 REMAINDER
06952                  *                                                  A2 QUOTIENT
06953  3596  0308               LDK      A3,8
06954  3598  8220               LDKL     A2,/7FFF
       359A  7FFF
06955  359C  8120               LDKL     A1,/FFF7            CR=2
       359E  FFF7
06956  35A0  C84C               DV       VALDV2-8,A3         CR=1
       35A2  3BBE  R
06957  35A4  5102               BF(1)    *+4
06958  35A6  207F               HLT                          WRONG CR
06959  35A8  B108               XRR      A1,A2
06960  35AA  E920               CWK      A1,/FFFF            CR=0
```

```
                35AA  FFEF
06961           35AA  5002                RF(0)   *+4
06962           35AC  207F                HLT                             WRONG REMAINDER OR QUOTIENT
06963                       ***
06964                       *       DV      FORMAT T6   (A1,A2) / ((M)) TO A1 REMAINDER
06965                       ***                                           A2 QUOTIENT
06966                       *
06967           35AE  0120                LDK     A1,/20
06968           35C0  0200                LDK     A2,0
06969           35C2  C860                DV*     INDV1                   CR=2
                35C4  34CC  R
06970           35C6  5202                RF(2)   *+4
06971           35C8  207F                HLT                             WRONG CR
06972           35CA  8108                XRR     A1,A2
06973           35CC  E920                CWK     A1,/FF00                CR=0
                35CE  FF00
06974           35D0  5002                RF(0)   *+4
06975           35D2  207F                HLT                             WRONG REMAINDER OR QUOTIENT
06976                       ***
06977                       *       DV      FORMAT T7   (A1,A2) / ((M+(X))) TO A1 REMAINDER
06978                       ***                                           A2 QUOTIENT
06979                       *
06980           35D4  0602                LDK     A6,2
06981           35D6  8120                LDKL    A1,/7FFF
                35D8  7FFF
06982           35DA  8220                LDKL    A2,/7FFF
                35DC  7FFF
06983           35DE  C878                DV*     INDV2-2,A6              CR=3
                35E0  34CC  R
06984           35E2  8E20                ABL(3)  LTYAND
                35E4  32DC  R
06985           35E6  207F                HLT                             WRONG CR
06986
```

```
06987                          EJECT
06988                  ********************************************************
06989                  *                                                      *
06990                  *          COMPLETE DIVIDE TEST                        *
06991                  *                                                      *
06992                  ********************************************************
06993                  *
06994                  *
06995                  *
06996                  *
06997  35E8  0000      FLAGOV   DATA    0                    OVERFLOW FLAG
06998  35EA  0000      RESUBO   DATA    0
06999  35EC  0000               DATA    0
07000                  *
07001                  *
07002        35EE      ESDIV    EQU     *
07003  35EE  8140               LD      A1,AND               OVERFLOW TEST
       35F0  32B2  R
07004  35F2  562B               RF(6)   TOVER1
07005  35F4  8240               LD      A2,EUR
       35F6  32C0  R
07006  35F8  5634               RF(6)   TOVER3
07007        35FA      TOVER2   EQU     *
07008  35FA  9908               SUR     A1,A2
07009        35FC      TOVER4   EQU     *
07010  35FC  8340               LD      A3,AND
       35FE  32B2  R
07011  3600  A320               ANKL    A3,/8000
       3602  8000
07012  3604  A120               ANKL    A1,/8000
       3606  8000
07013  3608  E90C               CWR     A1,A3
07014  360A  5008               RF(0)   SOVER
07015  360C  0200               LDK     A2,0
07016  360E  8241               ST      A2,FLAGOV
       3610  35E8  R
07017  3612  571F               RF(7)   EXTOVE
```

```
07018          3614      SOVER   EQU     *
07019 3614 0201                  LDK     A2,1
07020 3616 8241                  ST      A2,FLAGOV
      3618 35F8  R
07021 361A 5716                  RF(7)   EXTOVE
07022          361C      TOVER1  EQU     *
07023 361C 8240                  LD      A2,EUR
      361E 32C0  R
07024 3620 5E28                  RB(6)   TOVER2
07025 3622 8104                  LDR     A1,A1
07026 3624 5008                  RF(0)   TOVER3
07027 3626 8640                  LD      A6,AND+2
      3628 3284  R
07028 362A 5402                  RF(4)   TOVER3
07029 362C 1901                  SUK     A1,1
07030          362F      TOVER3  EQU     *
07031 362E 9108                  ADR     A1,A2
07032 3630 5F36                  RB(7)   TOVER4
07033          3632      EXTOVE  EQU     *               OVERFLOW TEST
07034 3632 8640                  LD      A6,AND+2        AND = 0 ?
      3634 3284  R
07035 3636 5414                  RF(4)   DIVIDE          NO
07036 3638 8640                  LD      A6,AND
      363A 3282  R
07037 363C 8740                  LD      A7,EUR
      363E 32C0  R
07038 3640 EE1C                  CWR     A6,A7           PFA = EUR
07039 3642 5408                  RF(4)   DIVIDE          NO
07040 3644 8618                  LDR     A6,A6
07041 3646 5604                  RF(6)   DIVIDE
07042 3648 9041                  TM      FLAGOV
      364A 35F8  R
07043          364C      DIVIDE  EQU     *
07044 364C 86A0                  LDKL    A10,/140
      364E 0140
07045 3650 8940                  ML      P,AND
      3652 3282  R
```

```
07046 3654 C840          DV      EUR             DIVIDE
      3656 3200 R
07047 3658 5304          RF(3)   TESTOV
07048 365A F6A1          CF      A14,TESTRD
      365C 3668 R
07049      365E  TESTOV  EQU     *
07050 365E 8340          LD      A3,FLAGOV
      3660 35E8 R
07051 3662 8920          ABL(1)  ENDTD
      3664 360C R
07052      ***
07053 3666 207F          HLT                     WRONG OVERFLOW
07054      ***
07055      3668  TESTRD  EQU     *
07056 3668 8440          LD      A4,FLAGOV
      366A 35E8 R
07057 366C 5002          RF(0)   *+4
07058      ***
07059 366E 207F          HLT                     CR=3 NON POSITIONNE
07060      ***
07061 3670 8588          LDR     A13,A2
07062 3672 8484          LDR     A12,A1
07063 3674 502C          RF(0)   TESTRQ
07064 3676 510C          RF(1)   RESDV1
07065 3678 8340          LD      A3,AND
      367A 3282 R
07066 367C 5202          RF(2)   TESTPR
07067      ***
07068 367E 207F          HLT                     WRONG QUOTIENT SIGN
07069      ***
07070      3680  TESTPR  EQU     *
07071 3680 8404          LDR     A4,A1
07072 3682 570C          RF(7)   TESTR2
07073      3684  RESDV1  EQU     *
07074 3684 8340          LD      A3,AND
      3686 3282 R
07075 3688 5602          RF(6)   TESTMR
```

```
07076                       ***
07077  36BA  207F                   HLT                          WRONG QUOTIENT SIGN
07078                       ***
07079        36BC           TESTMR  EQU     *
07080  36BC  0400                   LDK     A4,0
07081  36BE  9C04                   SUR     A4,A1
07082        3690           TESTB2  EQU     *
07083  3690  8540                   LD      A5,EUR
       3692  32C0  R
07084  3694  5204                   RF(2)   TESTMB
07085  3696  9414                   ADR     A4,A5
07086  3698  5702                   RF(7)   TESTPO
07087        369A           TESTMB  EQU     *
07088  369A  9C14                   SUR     A4,A5
07089        369C           TESTPO  EQU     *
07090  369C  8410                   LDR     A4,A4
07091  369E  5102                   RF(1)   TESTBQ
07092                       ***
07093  36A0  207F                   HLT                          WRONG MODULE
07094                       ***
07095        36A2           TESTBQ  EQU     *
07096  36A2  C014                   MUR     A5
07097  36A4  8941                   MS      2,RESUBQ
       36A6  35EA  R
07098  36A8  8112                   LDR     A1,A12
07099  36AA  382F                   DRA     15
07100  36AC  8040                   DA      RESUBQ
       36AE  35EA  R
07101  36B0  0880                   DS      AND
       36B2  32B2  R
07102  36B4  5002                   RF(0)   **+4
07103                       ***
07104  36B6  207F                   HLT                          WRONG RESULT
07105                       ***
07106  36B8  8616                   LDR     A6,A13
07107  36BA  5004                   RF(0)   CRESUA
07108  36BC  5106                   RF(1)   CRESUB
```

```
07109  36BE  520A            RF(2)   CRESUC
07110        36C0      CRESUA EQU     *
07111  36C0  0700            LDK     A7,0
07112  36C2  570A            RF(7)   CREFIN
07113        36C4      CRESUB EQU     *
07114  36C4  8720            LDKL    A7,/100
       36C6  0100
07115  36C8  5704            RF(7)   CREFIN
07116        36CA      CRESUC EQU     *
07117  36CA  8720            LDKL    A7,/200
       36CC  0200
07118        36CE      CREFIN EQU     *
07119  36CE  8640            LD      A6,/140-2
       36D0  013E
07120  36D2  A620            ANKL    A6,/300
       36D4  0300
07121  36D6  EE1C            CWR     A6,A7
07122  36D8  5002            RF(0)   ENDTD
07123                  ***
07124  36DA  207F            HLT                     WRONG CR QUOTIENT
07125                  ***
07126        36DC      ENDTD  EQU     *
07127  36DC  8E20            ABL(7)  IXEUR
       36DE  33E0  R
07128        36E0      ENDIVI EQU     *
07129        36E0      SUIT   EQU     *
07130                  *      A
```

```
07131                          EJECT
07132                  *
07133                  *
07134                  ************************************************
07135                  *                                              *
07136                  *       LOAD ADDRESS AND BIT HANDLING          *
07137                  *                                              *
07138                  ************************************************
07139                  *
07140                  *       LDA     FORMAT T1   (R2)+ M  TO  R1
07141                  **
07142          36E0    LDA     EQU     *
07143  36E0  8220            LDKL    A2,/7FFE
       36E2  7FFE
07144  36E4  F108            DATA    /F108                 * LDA   A1,/8002,A2
07145  36E6  8002            DATA    /8002
07146  36E8  5102            RF(1)   *+4
07147  36EA  207F            HLT                           WRONG CR AFTER LDA
07148  36EC  8104            LDR     A1,A1
07149  36EE  5002            RF(0)   *+4
07150  36F0  207F            HLT                           WRONG RESULT IN A1 REGISTER
07151                  *
07152  36F2  8420            LDKL    A4,/FE22
       36F4  FE22
07153  36F6  F310            DATA    /F310                 * LDA   A3,/01E0,A4
07154  36F8  01E0            DATA    /01E0
07155  36FA  5202            RF(2)   *+4
07156  36FC  207F            HLT                           WRONG CR AFTER LDA
07157  36FE  1802            SUK     A3,2
07158  3700  5002            RF(0)   *+4
07159  3702  207F            HLT                           WRONG RESULT IN A3 REGISTER
07160                  *
07161  3704  8620            LDKL    A6,0
       3706  0000
07162  3708  F518            DATA    /F518                 * LDA   A5,/BCDE,A6
07163  370A  BCDE            DATA    /BCDE
07164  370C  5002            RF(0)   *+4
```

```
07165  $70E  207F        HLT                 WRONG CR AFTER LDA
07166  $710  9520        ADKL    A5,/4322
       $712  4322
07167  $714  5012        RF(0)   TA5
07168  $716  207F        HLT                 WRONG RESULT IN A5 REGISTER
```

```
07169                                  EJECT
07170                          *
07171                          ***
07172                          *       TAS     TEST AND SET            FORMAT T3
07173                          ***
07174          3718            TABTAS  EQU     *
07175  3718    0000                    DATA    0
07176  371A    0000                    DATA    0
07177  371C    0000                    DATA    0
07178  371E    0000                    DATA    0
07179  3720    0000                    DATA    0                       *** TESTED WORD
07180  3722    0000                    DATA    0
07181  3724    0000                    DATA    0
07182  3726    0000                    DATA    0
07183                          *
07184          3728            TAS     EQU     *
07185                          *
07186  3728    8120                    LDKL    A1,TABTAS
       372A    3718  R
07187  372C    0240                    LDK     A2,/40
07188  372E    C025                    DATA    /C025                   * TAS   A1
07189  3730    5002                    RF(0)   *+4
07190  3732    207F                    HLT                             WRONG CR AFTER TAS
07191  3734    8308                    LDR     A3,A2
07192  3736    8863                    SRL     A3,3
07193  3738    844C                    LD      A4,TABTAS,A3
       373A    3718  R
07194  373C    5202                    RF(2)   *+4
07195  373E    207F                    HLT                             WRONG RESULT
07196                          *
07197  3740    1101                    ADK     A1,1
07198  3742    C025                    DATA    /C025                   * TAS   A1
07199  3744    5002                    RF(0)   *+4
07200  3746    207F                    HLT                             WRONG CR AFTER TAS
07201  3748    844C                    LD      A4,TABTAS,A3
       374A    3718  R
07202  374C    4C48                    SLL     A4,8
```

```
07203  $74F  5202          RF(2)   *+4
07204  $750  207F          HLT                     WRONG RESULT
07205                *
07206  $752  C025          DATA    /C025           * TAS   A1
07207  $754  5102          RF(1)   *+4
07208  $756  207F          HLT                     WRONG CR AFTER TAS
07209                *
07210  $758  1901          SUK     A1,1
07211  $75A  C025          DATA    /C025           * TAS   A1
07212  $75C  5102          RF(1)   *+4
07213  $75E  207F          HLT                     WRONG CR AFTER TAS
07214  $760  8120          LDKL    A4,/8080
       $762  8080
07215  $764  9C4D          SUS     A4,TABTAS,A3
       $766  $718  R
07216  $768  5012          RF(0)   TAR
07217  $76A  207F          HLT                     WRONG RESULT
```

```
07218                              EJECT
07219                      *
07220                      ***
07221                      *       TAR     TEST AND RESET          FORMAT T3
07222                      ***
07223          376C        TABTAR  EQU     *
07224  376C    FFFF                DATA    /FFFF
07225  376E    FFFF                DATA    /FFFF
07226  3770    FFFF                DATA    /FFFF
07227  3772    FFFF                DATA    /FFFF
07228  3774    FFFF                DATA    /FFFF                   *** TESTED WORD
07229  3776    FFFF                DATA    /FFFF
07230  3778    FFFF                DATA    /FFFF
07231  377A    FFFF                DATA    /FFFF
07232          377C        TAR     EQU     *
07233                      *
07234  377C    A120                LDKL    A1,TABTAR
       377E    376C  R             
07235  3780    0240                LDK     A2,/40
07236  3782    C825                DATA    /C825                   * TAR   A1
07237  3784    5102                RF(1)   *+4
07238  3786    207F                HLT                             WRONG CR AFTER TAR
07239  3788    8308                LDR     A3,A2
07240  378A    3863                SRL     A3,3
07241  378C    A44C                LD      A4,TABTAR,A3
       378E    376C  R             
07242  3790    5102                RF(1)   *+4
07243  3792    207F                HLT                             WRONG RESULT
07244                      *
07245  3794    1101                ADK     A1,1
07246  3796    C825                DATA    /C825                   * TAR   A1
07247  3798    5102                RF(1)   *+4
07248  379A    207F                HLT                             WRONG CR AFTER TAR
07249  379C    A44C                LD      A4,TABTAR,A3
       379E    376C  R             
07250  37A0    3C48                SLL     A4,8
07251  37A2    5102                RF(1)   *+4
```

```
07252  37A4  207F          HLT                          WRONG RESULT
07253                  A
07254  37A5  C825          DATA    /C825                * TAR   A1
07255  37A8  5002          RF(0)   *+4
07256  37AA  207F          HLT                          WRONG CR AFTER TAR
07257                  A
07258  37AC  1901          SUK     A1,1
07259  37AE  C825          DATA    /C825                * TAR   A1
07260  37B0  5002          RF(0)   *+4
07261  37B2  207F          HLT                          WRONG CR AFTER TAR
07262  37B4  8420          LDKL    A4,/8080
       37B6  8080
07263  37B8  9480          ADS     A4,TABTAR,A3
       37BA  37AC  R
07264  37BC  8480          LD      A4,TABTAR,A3
       37BE  37AC  R
07265  37C0  1401          ADK     A4,1
07266  37C2  5010          RF(0).  TB
07267  37C4  207F          HLT                          WRONG RESULT
```

```
07268                          OBJECT
07269                    *
07270                    ***
07271                    *     TB        TEST BIT              FORMAT T3
07272                    ***
07273          3706      TABTB EQU       *
07274 3706   0000              DATA      /0000
07275 3708   0000              DATA      /0000
07276 370A   8080              DATA      /8080                 *** TESTED WORD
07277 370C   FFFF              DATA      /FFFF
07278 370E   7F7F              DATA      /7F7F                 *** TESTED WORD
07279 3710   FFFF              DATA      /FFFF
07280 3712   FFFF              DATA      /FFFF
07281          3714      TB    EQU       *
07282                    *
07283 3714   8120              LDKL      A1,TABTB
      3716   3706 R
07284 3718   0240              LDK       A2,/40
07285 371A   D025              DATA      /D025                 * TB    A1
07286 371C   5002              RF(0)     *+4
07287 371E   207F              HLT                             WRONG CR AFTER TB
07288 3720   F308              LDR       A3,A2
07289 3722   3863              SRL       A3,3
07290 3724   840C              LD        A4,TABTB,A3
      3726   3706 R
07291 3728   5102              RF(1)     *+4
07292 372A   207F              HLT                             WRONG RESULT
07293                    *
07294 372C   1101              ADK       A1,1
07295 372E   D025              DATA      /D025                 * TB    A1
07296 3730   5002              RF(0)     *+4
07297 3732   207F              HLT                             WRONG CR AFTER TB
07298 3734   840C              LD        A4,TABTB,A3
      3736   3706 R
07299 3738   3C48              SLL       A4,8
07300 373A   5102              RF(1)     *+4
07301 373C   207F              HLT                             WRONG RESULT
```

```
1/61 305  DATI    - -          IDENT    CP57RE    5111 991 68981                    TIME 24H-60M-60S


07302                    *
07303  3FEE  0220              LDK      A2,/20
07304  3FF0  3F61              SRL      A3,1
07305  3FF2  D025              DATA     /D025              * TB    A1
07306  3FF4  5102              RF(1)    *+4
07307  3FF6  207F              HLT                         WRONG CR AFTER TB
07308                    *
07309  3FF8  1901              SUK      A1,1
07310  3FFA  D025              DATA     /D025              * TB    A1
07311  3FFC  5102              RF(1)    *+4
07312  3FFE  207F              HLT                         WRONG CR AFTER TB
07313  4000  0520              LDKL     A5,/8080
       4002  8080
07314  4004  644C              LD       A4,TABTB,A3
       4006  37C6  R
07315  4008  EC14              CWR      A4,A5
07316  400A  501A              RF(Z)    STRIST
07317  400C  207F              HLT                         WRONG RESULT!
```

```
07318                          EJECT
07319                  ********************************************************************************
07320                  *                                "D" FORMAT                                    *
07321                  *                          TEST STRING HANDLING SET                            *
07322                  *                           MOS  MOA  COS  COA                                 *
07323                  ********************************************************************************
07324                  *
07325                  *
07326          381F    STREMI  EQU     *
07327  381E    F000            DATA    /F000
07328  3820    0F00            DATA    /0F00
07329  3822    00F0            DATA    /00F0
07330  3824    000F            DATA    /000F
07331                  *
07332          3826    STRREC  EQU     *
07333  3826                    RES     4
07334          382F    STRZR   EQU     *
07335  382E    0000            DATA    0,0,0,0
       3830    0000
       3832    0000
       3834    0000
07336                  *
07337                  *       MOS FORMAT T8       IF A2#0
07338                  *                           THEN     CHAR((A3)) IN CHAR((A4))
07339                  *       MOVF IS DONE BACKWARD SO A3+N IN A3 THEN A3-1 IN A3
07340                  *                                A4+N IN A4 THEN A4-1 IN A4
07341                  *                                     A2-1 IN A2
07342          3836    STRTST  EQU     *
07343  3836    DA40            ML      4,STRZR
       3838    382E  R
07344  383A    DA41            MS      4,STRREC
       383C    3826  R
07345  383E    D320            LDKL    A3,STREMI            NO TRANSFER
       3840    381E  R
07346  3842    D420            LDKL    A4,STRREC
       3844    3826  R
07347  3846    0200            LDK     A2,0
```

```
07348  3848  8520          LDKL    A5,-1           SET CR TO 2
       384A  FFFF
07349  384C  6800          DATA    /6800           MOS
07350  384E  5202          RF(N)   *+4
07351  3850  207F          HLT                     CR HAS BEEN MODIFIED
07352  3852  9820          SUKL    A3,STREMI
       3854  381F  R
07353  3856  5002          RF(Z)   *+4
07354  3858  207F          HLT                     A3 HAS BEEN MODIFIED
07355  385A  9C20          SUKL    A4,STRREC
       385C  3826  R
07356  385E  5002          RF(Z)   *+4
07357  3860  207F          HLT                     A4 HAS BEEN MODIFIED
07358  3862  8208          LDR     A2,A2
07359  3864  5002          RF(Z)   *+4
07360  3866  207F          HLT                     A2 HAS BEEN MODIFIED
07361  3868  6A40          ML      4,STRREC
       386A  3826  R
07362  386C  8108          XRR     A1,A2
07363  386E  810C          XRR     A1,A3
07364  3870  8110          XRR     A1,A4
07365  3872  5002          RF(Z)   *+4
07366  3874  207F          HLT                     TABLE NOT EMPTY
07367                      *
07368                      A
07369  3876  8320          LDKL    A3,STREMI       TRANSFER ALL CHAR.
       3878  381F  R
07370  387A  8420          LDKL    A4,STRREC
       387C  3826  R
07371  387E  0208          LDK     A2,8
07372  3880  9D14          SUR     A5,A5           SET CR TO 0
07373  3882  6800          DATA    /6800           MOS
07374  3884  5002          RF(Z)   *+4
07375  3886  207F          HLT                     CR HAS BEEN MODIFIED
07376  3888  9820          SUKL    A3,STREMI-1
       388A  3810  R
07377  388C  5002          RF(Z)   *+4
```

```
07378 3A8E 207F          HLT                 A3 IS NOT OK
07379 3A90 9C20          SUKL    A4,STRREC-1
      3A92 3825  R
07380 3A94 5002          RF(Z)   *+4
07381 3A96 207F          HLT                 A4 IS NOT OK
07382 3A98 A208          LDR     A2,A2
07383 3A9A 5002          RF(Z)   *+4
07384 3A9C 207F          HLT                 A2 IS NOT ZERO
07385 3A9E 8A40          ML      4,STRREC
      3AA0 3826  R
07386 3AA2 B108          XRR     A1,A2
07387 3AA4 B10C          XRR     A1,A3
07388 3AA6 B110          XRR     A1,A4
07389 3AA8 E920          CWK     A1,/FFFF
      3AAA FFFF
07390 3AAC 5002          RF(Z)   *+4
07391 3AAE 207F          HLT                 MOS NOT OK
07392                  *
07393                  *
07394 3AB0 8820          LDKL    A3,STRFMI
      3AB2 381E  R
07395 3AB4 8420          LDKL    A4,STRREC+6
      3AB6 382C  R
07396 3AB8 9201          LDK     A2,1        TRANSFER 1 CHAR, LEFT TO LEFT
07397 3ABA 8520          LDKI    A5,1        SET CR TO 1
      3ABC 0001
07398 3ABE 6800          DATA    /6800       MOS
07399 3AC0 5102          RF(P)   *+4
07400 3AC2 207F          HLT                 CR HAS BEEN MODIFIED
07401 3AC4 8A40          ML      4,STRREC
      3AC6 3826  R
07402 3AC8 B108          XRR     A1,A2
07403 3ACA B10C          XRR     A1,A3
07404 3ACC B110          XRR     A1,A4
07405 3ACE E920          CWK     A1,/0FFF
      3AD0 0FFF
07406 3AD2 5002          RF(Z)   *+4
```

```
07407  3804  207F          HLT             MOS NOT OK
07408                  *
07409                  *
07410  3806  A320          LDKL    A3,STREMI+1     TRANSFER 1 CHAR, RIGTH TO LEFT
       380A  381F  R
07411  380A  A420          LDKL    A4,STRREC+6
       380C  382C  R
07412  380E  0201          LDK     A2,1
07413  3810  6800          DATA    /6800           MOS
07414  3812  BA40          ML      4,STRREC
       3814  3826  R
07415  3816  B108          XRR     A1,A2
07416  3818  B10C          XRR     A1,A3
07417  381A  B110          XRR     A1,A4
07418  381C  E920          CWK     A1,/FFFF
       381E  FFFF
07419  3820  5002          BF(7)   *+4
07420  3822  207F          HLT             MOS NOT OK
07421                  *
07422                  *
07423  3824  BA40          ML      4,STRZR
       3826  382E  R
07424  3828  BA41          MS      4,STRREC
       382A  3826  R
07425  382C  A320          LDKL    A3,STREMI 5     TRANSFER 3 CHAR,
       382E  3823  R
07426  3900  A420          LDKL    A4,STRREC
       3902  3826  R
07427  3904  0203          LDK     A2,3
07428  3906  6800          DATA    /6800
07429  3908  BA40          ML      4,STRREC
       390A  3826  R
07430  390C  E920          CWK     A1,/F000
       390E  F000
07431  3910  5002          BF(7)   *+4
07432  3912  207F          HLT             MOS IS NOT OK
07433  3914  EA20          CWK     A2,/F00
```

```
            3016  0F00
07434       3018  5002        RF(Z)     *+4
07435       301A  207F        HLT                        MOS IS WRONG
07436       301C  E310        XRR       A3,A3
07437       301E  5002        RF(Z)     *+4
07438       3020  207F        HLT                        MOS IS NOT OK
```

```
07039                                   EJECT
07040                          *
07041                          *
07042                          *            MOA FORMAT T8      IF A2#0
07043                          *                               THEN   CHAR(A1) IN CHAR((A4))
07044                          *                                      A4+1 IN A4
07045                          *                                      A2-1 IN A2
07046                          *
07047                          *
07048  3922  BA40               ML      4,STRZR
       3924  382E  R
07049  3926  BA41               MS      4,STRREC
       3928  3826  R
07050  392A  8420               LDKL    A4,STRREC          NO TRANSFER
       392C  3326  R
07051  392E  0200               LDK     A2,0
07052  3930  8120               LDKL    A1,/FFFF
       3932  FFFF
07053  3934  8520               LDKL    A5,-1
       3936  FFFF
07054  3938  6840               DATA    /6840              MOA
07055  393A  5202               RF(N)   *+4
07056  393C  207F               HLT                        CR HAS BEEN MODIFIED
07057  393E  8C20               CWK     A4,STRREC
       3940  3826  R
07058  3942  5002               RF(Z)   *+4
07059  3944  207F               HLT                        A4 HAS BEEN MODIFIED
07060  3946  8208               LDR     A2,A2
07061  3948  5002               RF(Z)   *+4
07062  394A  207F               HLT                        A2 HAS BEEN MODIFIED
07063  394C  9A40               ML      4,STRREC
       394E  3826  R
07064  3950  8108               XRR     A1,A2
07065  3952  810C               XRR     A1,A3
07066  3954  8110               XRR     A1,A4
07067  3956  5002               RF(Z)   *+4
07068  3958  207F               HLT                        TABLE IS NOT EMPTY
```

```
07069                                   *
07070                                   *
07071  395A  8420                      LDKL    A4,STRREC           FILL ALL CHAR,
       395C  3826  R
07072  395E  0208                      LDK     A2,8
07073  3960  8120                      LDKI    A1,/A0F0
       3962  A0F0
07074  3964  9D14                      SUR     A5,A5               SET CR TO 0
07075  3966  6840                      DATA    /6840               MOA
07076  3968  5002                      RF(Z)   *+4
07077  396A  207F                      HLT                         CR HAS BEEN MODIFIED
07078  396C  9C20                      SUKI.   A4,STRREC+8
       396E  382C  R
07079  3970  5002                      RF(Z)   *+4
07080  3972  207F                      HLT                         A4 IS WRONG
07081  3974  A208                      LDR     A2,A2
07082  3976  5002                      RF(Z)   *+4
07083  3978  207F                      HLT                         A2 IS NOT ZERO
07084  397A  BA40                      ML      4,STRREC
       397C  3826  R
07085  397E  B108                      XRR     A1,A2
07086  3980  B10C                      XRR     A1,A3
07087  3982  E920                      CWK     A1,/F0F0
       3984  F0F0
07088  3986  5002                      RF(Z)   *+4
07089  3988  207F                      HLT                         MOA IS NOT OK
07090  398A  B110                      XRR     A1,A4
07091  398C  5002                      RF(Z)   *+4
07092  398E  207F                      HLT                         MOA IS NOT OK
07093                                   *
07094                                   *
07095  3990  BA40                      ML      4,STRZR
       3992  382C  R
07096  3994  BA41                      MS      4,STRREC
       3996  3826  R
07097  3998  8420                      LDKL    A4,STRREC           FILL FIRST CHAR,
       399A  3826  R
```

```
07478 39DC 0201          LDK     A2,1
07479 39DE A120          LDKL.   A1,/F0AA
      39E0 F0AA
07480 39E2 A520          LDKL    A5,1                    SET CR TO 1
      39E4 0001
07481 39E6 6840          DATA    /6840                   MOA
07482 39E8 5102          RF(P)   *+4
07483 39EA 207F          HLT                             CR HAS BEEN MODIFIED
07484 39EC BA40          ML      4,STRREC
      39EE 3826  R
07485 39F0 E920          CWK     A1,/AA00
      39F2 AA00
07486 39F4 5002          RF(Z)   *+4
07487 39F6 207F          HLT                             MOA IS NOT OK
07488 39F8 B20C          XRR     A2,A3
07489 39FA B210          XRR     A2,A4
07490 39FC 5002          RF(Z)   *+4
07491 39FE 207F          HLT                             MOA IS NOT OK
07492                    *
07493                    *
07494 3A00 BA40          ML      4,STRZR
      3A02 382F  R
07495 3A04 BA41          MS      4,STRREC
      3A06 3826  R
07496 3A08 A420          LDKL    A4,STRREC+7             FILL LAST CHAR.
      3A0A 3828  R
07497 3A0C 0201          LDK     A2,1
07498 3A0E A120          LDKL    A1,/AFFF
      3A10 AFFF
07499 3A12 6840          DATA    /6840                   MOA
07500 3A14 BA40          ML      4,STRREC
      3A16 3826  R
07501 3A18 B108          XRR     A1,A2
07502 3A1A B10C          XRR     A1,A3
07503 3A1C 5002          RF(Z)   *+4
07504 3A1E 207F          HLT                             MOA IS NOT OK
07505 3A20 EC20          CWK     A4,/FF
```

```
                39F2  00FF
07626           39F4  5012          RF(E)   *+4
07627           39F6  207F          HLT                     MOA IS NOT OK
07628                               *
07629                               *
07630           39F8  BA40          ML      4,STRZR
                39FA  382C  R
07631           39FC  BA41          MS      4,STRREC
                39FE  3826  R
07632           3A00  8420          LDKL    A4,STRREC+4     FILL 3 CHAR,
                3A02  382A  R
07633           3A04  0203          LDK     A2,3
07634           3A06  8120          LDKL    A1,/FF55
                3A08  FF55
07635           3A0A  6840          DATA    /6840           MOA
07636           3A0C  BA40          ML      4,STRREC
                3A0E  3826  R
07637           3A10  B108          XRR     A1,A2
07638           3A12  5002          RF(Z)   *+4
07639           3A14  207F          HLT                     MOA IS NOT OK
07640           3A16  F820          CWK     A3,/5555
                3A18  5555
07641           3A1A  5002          RF(Z)   *+4
07642           3A1C  207F          HLT                     MOA IS NOT OK
07643           3A1E  FC20          CWK     A4,/5500
                3A20  5500
07644           3A22  501A          RF(7)   NOSOV
07645           3A24  207F          HLT                     MOA IS NOT OK
```

```
07586                                   EJECT
07587                           *
07588                           *
07589                           *       TEST OF MOS IF THE TABLES ARE OVERLAPED
07590                           *
07591                           *
07592                           *       S=SOURCE TABLE
07593                           *       D=DESTINATION TABLE
07594                           *       N=NUMBER OF CHARS.
07595                           *
07596                           *       (S-D)>N NO OVERLAP
07597                           *
07598                           *       (S-D)<OR EQUALS OVERLAP
07599                           *
07600                           *       S-D>0 D TABLE IS FORWARD MOVE BOTTOM TO TOP
07601                           *
07602                           *       S-D<0 D TABLE IS BACKWARD MOVE TAP TO BOTTOM
07603                           *
07604                           *       S-D=0 NO MOVE
07605                           *
07606                           *
07607  3A16                             RES     4
07608          3A1F             STRD    EQU     *
07609          3A1F             STRS    EQU     *
07610  3A15                             RES     8
07611                           *
07612                           *       S-D=0
07613                           *
07614          3A2E             MOSOV   EQU     *
07615  3A2E    BA40                     ML      4,STREMI
       3A30    3B1F  R
07616  3A32    BA41                     MS      4,STRS
       3A34    3A1E  R
07617  3A36    8320                     LDKL    A3,STRS
       3A38    3A1E  R
07618  3A3A    8420                     LDKL    A4,STRD
       3A3C    3A1F  R
```

```
07579  3A3E  0208          LDK     A2,8
07580  3A40  6800          DATA    /6800           MOS
07581  3A42  BA40          ML      4,STRD
       3A44  3A1E  R
07582  3A46  B108          XRR     A1,A2
07583  3A48  B10C          XRR     A1,A3
07584  3A4A  B110          XRR     A1,A4
07585  3A4C  E920          CWK     A1,-1
       3A4E  FFFF
07586  3A50  5002          RF(E)   *+4
07587  3A52  207F          HLT                     MOS NOT CORRECT
07588                  *
07589                  *   S-D<0
07590                  *
07591  3A54  BA40          ML      4,STREMI
       3A56  3B1F  R
07592  3A58  BA41          MS      4,STRS
       3A5A  3A1E  R
07593  3A5C  B320          LDKL    A3,STRS
       3A5E  3A1E  R
07594  3A60  B420          LDKL    A4,STRD+2
       3A62  3A20  R
07595  3A64  0208          LDK     A2,8
07596  3A66  6800          DATA    /6800
07597  3A68  BA40          ML      4,STRD+2
       3A6A  3A20  R
07598  3A6C  B108          XRR     A1,A2
07599  3A6E  B10C          XRR     A1,A3
07600  3A70  B110          XRR     A1,A4
07601  3A72  E920          CWK     A1,-1
       3A74  FFFF
07602  3A76  5002          RF(F)   *+4
07603  3A78  207F          HLT                     MOS NOT OK
07604                  *
07605                  *   S-D>0
07606                  *
07607  3A7A  BA40          ML      4,STREMI
```

```
                3A7C  3B1F  R
07608           3A7E  BA01        MS      4,STPS
                3A80  3A1F  R
07609           3A82  8320        LDKL    A3,STRS
                3A84  3A1E  R
07610           3A86  8420        LDKL    A4,STRD-2
                3A88  3A1C  R
07611           3A8A  0208        LDK     A2,8
07612           3A8C  6800        DATA    /6800               MOS
07613           3A8E  BA40        ML      4,STRD-2
                3A90  3A1C  R
07614           3A92  B108        XRR     A1,A2
07615           3A94  B10C        XRR     A1,A3
07616           3A96  B110        XRR     A1,A4
07617           3A98  E020        CWK     A1,-1
                3A9A  FFFF
07618           3A9C  5002        RF(F)   *+4
07619           3A9E  207F        HLT                         MOS NOT OK
07620           3AA0  5720        RF      COS
```

```
07621                          EJECT
07622                    *
07623                    *
07624                    ***   COS      FORMAT T8  1 0 IN CR
07625                    *                IF (A2)#0
07626                    *                THEN ! IF CHAR. ((A3)) V CHAR. ((A4))
07627                    *                          THEN (A3)+1 IN A3
07628                    *                          THEN (A4)+1 IN A4
07629                    *                          THEN (A2-1 IN A2
07630                    *                          ESLE ! 1 IN CR IF ((A3))>((A4))
07631                    *                                 2 IN CR IF ((A3))<((A4))
07632                    *
07633                    *
07634          3AA2      COSSOU   EQU      *
07635 3AA2   00FF                DATA     /00FF,/EE11,/22DD,/CC33
       3AA4  EE11
       3AA6  22DD
       3AA8  CC33
07636 3AAA   44BB                DATA     /44BB,/AA55,/6699,/8877
       3AAC  AA55
       3AAE  6699
       3AB0  88/7
07637          3AB2      COSDES   EQU      *
07638 3AB2                       RES      8
07639                    *
07640                    *
07641          3AC2      COS      EQU      *
07642 3AC2   BC40                MR       8,COSSOU
       3AC4  3AA2  R
07643 3AC6   BC41                MR       8,COSDES
       3AC8  3AB2  R
07644 3ACA   8320                LDKL     A3,COSSOU          NO COMPARE A2,0
       3ACC  3AA2  R
07645 3ACE   8420                LDKL     A4,COSDES
       3AD0  3AB2  R
07646 3AD2   0200                LDK      A2,0
07647 3AD4   8520                LDKL     A5,-1
```

```
                3AD6  FFFF
07648           3AD8  6880          DATA    /6880               COS
07649           3ADA  5002          RF(Z)   *+4
07650           3ADC  207F          HLT                         CR SHOULD BE 0
07651           3ADE  EC20          CWK     A3,COSSOU
                3AE0  3AA2  R
07652           3AE2  5002          RF(F)   *+4
07653           3AE4  207F          HLT                         A3 HAS BEEN MODIFIED
07654           3AE6  EC20          CWK     A4,COSDES
                3AE8  3AB2  R
07655           3AEA  5002          RF(F)   *+4
07656           3AEC  207F          HLT                         A4 HAS BEEN MODIFIED
07657           3AEE  8208          LDR     A2,A2
07658           3AF0  5002          RF(Z)   *+4
07659           3AF2  207F          HLT                         A2 HAS BEEN MODIFIED
07660                               *
07661                               *
07662           3AF4  0208          LDK     A2,8
07663           3AF6  6520          LDKI    A5,-1
                3AF8  FFFF
07664           3AFA  6880          DATA    /6880               COS COMPARE TWO IDENTICAL TABLES
07665           3AFC  5002          RF(Z)   *+4                 CR SHOULD BE  0
07666           3AFE  207F          HLT                         CR IS NOT ZERO
07667           3B00  EC20          CWK     A3,COSSOU+8
                3B02  3AAA  R
07668           3B04  5002          RF(F)   *+4
07669           3B06  207F          HLT                         A3 POINTER IS NOT OK
07670           3B08  EC20          CWK     A4,COSDES+8
                3B0A  3ABA  R
07671           3B0C  5002          RF(Z)   *+4
07672           3B0E  207F          HLT                         A4 POINTER NOT OK
07673           3B10  8208          LDR     A2,A2
07674           3B12  5002          RF(Z)   *+4                 A2 NOT NULL
07675           3B14  207F          HLT                         A2 IS NOT ZERO
07676                               *
07677                               *
07678           3B16  8A40          ML      4,COSSOU+8
```

```
                3B18  3AAA  R
07679           3B1A  8A41        MS      4,COSDES+8
                3B1C  3ABA  R
07680           3B1E  8320        LDKL    A3,COSSOU           ((A3))=0
                3B20  3AA2  R
07681           3B22  8420        LDKL    A4,COSDES+15        ((A4))=77
                3B24  3AC1  R
07682           3B26  0210        LDK     A2,16               SO (((A3))<((A4)) CR=2
07683           3B28  A520        LDKL    A5,-1
                3B2A  FFFF
07684           3B2C  6880        DATA    /6880               FALSE COMPARE ON FIRST CHAR.
07685           3B2E  5202        RF(N)   *+4
07686           3B30  207F        HLT                         CR IS NOT NEG.
07687           3B32  EB20        CWK     A3,COSSOU
                3B34  3AA2  R
07688           3B36  5002        RF(E)   *+4
07689           3B38  207F        HLT                         A3 POINTER IS NOT OK
07690           3B3A  EC20        CWK     A4,COSDES+15
                3B3C  3AC1  R
07691           3B3E  5002        RF(E)   *+4
07692           3B40  207F        HLT                         A4 POINTER IS WRONG
07693                         *
07694                         *
07695           3B42  8320        LDKL    A3,COSSOU
                3B44  3AA2  R
07696           3B46  8120        LDKL    A1,/2233            MODIFY COSDES TABLE
                3B48  2233
07697           3B4A  8141        ST      A1,COSDES+4
                3B4C  3ABA  R
07698           3B4E  8420        LDKL    A4,COSDES           ((A3))=DD  ((A4))=33
                3B50  3AB2  R
07699           3B52  A520        LDKL    A5,-1               SO ((A3))>((A4))
                3B54  FFFF
07700           3B56  0210        LDK     A2,16
07701           3B58  6880        DATA    /6880               FALSE COMPARE ON THE 5 TH CHAR.
07702           3B5A  5102        RF(P)   *+4
07703           3B5C  207F        HLT                         CR SHOULD BE POSITIVE
```

```
07704  3B5C  EC20        CWK     A4,COSDES+5
       3B60  3AB7  R
07705  3B62  5002        RF(E)   *+4
07706  3B64  207C        HLT                     A4 POINTER NOT OK
07707  3B66  EB20        CWK     A3,COSSOU+5
       3B68  3AA7  R
07708  3B6A  5002        RF(E)   *+4
07709  3B6C  207F        HLT                     A3 POINTER IS NOT OK
07710                     *
07711                     *
07712  3B6E  1301        ADK     A3,1            CONTINTOUS THE COMPARISON
07713  3B70  1401        ADK     A4,1
07714  3B72  8120        LDKI    A1,/88FF
       3B74  88FF
07715  3B76  8141        ST      A1,COSDES+15    MODIFY LAST CHAR,
       3B78  3AC1  R
07716  3B7A  8520        LDKL    A5,-1           ((A3))=77,((A4))==FF SO ((A3))<((A4))
       3B7C  FFFF
07717  3B7E  6880        DATA    /6880           FALSE COMPARE ON LAST CHAR,
07718  3B80  5202        RF(N)   *+4
07719  3B82  207F        HLT                     CR SHOULD BE NEGATIVE
07720  3B84  EB20        CWK     A3,COSSOU+15
       3B86  3AB1  R
07721  3B88  5002        RF(E)   *+4
07722  3B8A  207F        HLT                     A3 POINTER IS NOT OK
07723  3B8C  EC20        CWK     A4,COSDES+15
       3B8E  3AC1  R
07724  3B90  5002        RF(E)   *+4
07725  3B92  207F        HLT                     A4 POINTER IS NOT OK
```

```
07726                          EJECT
07727                    *
07728                    *
07729                    ***   COA       FORMAT T8  1 0 IN CR
07730                    *                IF (A2)#0
07731                    *                THEN : IF CHAR, (A1)=CHAR, ((A4))
07732                    *          (OLD PROM'S)           THEN (A4)+1 IN A4
07733                    *                                      (A2)-1 IN A2
07734                    *                                 ELSE : 1 IN CR IF (A1)>((A4))
07735                    *                                        2 IN CR IF (A1)<((A4))
07736                    *
07737                    *
07738                    *
07739  3B94  8420              LDKL      A4,COSSOU
       3B96  3AA2  R
07740  3B98  0100              LDK       A1,0
07741  3B9A  0200              LDK       A2,0                  NO COMPARE
07742  3B9C  8520              LDKI      A5,-1                 SET CR TO 2
       3B9E  FFFF
07743  3BA0  6840              DATA      /6840                 COA
07744  3BA2  5204              RF(N)     *+6
07745  3BA4  507C              RF(Z)     COANV                 CHECK IF IT IS NOT NEW PROM'S
07746  3BA6  207F              HLT                             CR IS POSITIVE
07747  3BA8  FC20              CWK       A4,COSSOU
       3BAA  3AA2  R
07748  3BAC  5002              RF(F)     *+4
07749  3BAE  207F              HLT                             A4 HAS BEEN MODIFIED
07750  3BB0  8208              LDR       A2,A2
07751  3BB2  5002              RF(Z)     *+4
07752  3BB4  207F              HLT                             A2 HAS BEEN MODIFFD
07753                    *
07754                    *
07755  3BB6  8420              LDKL      A4,COSDES             FILL UP TABLE WITH 0
       3BB8  3AB2  R
07756  3BBA  0100              LDK       A1,0
07757  3BBC  0210              LDK       A2,16
07758  3BBE  6840              DATA      /6840                 MOA
```

```
07759 3AC0 0100          LDK     A1,0
07760 3AC2 8420          LDKL    A4,COSDES
      3AC4 3AA2  R
07761 3AC6 0210          LDK     A2,16
07762 3AC8 8520          LDKL    A5,-1
      3ACA FFFF
07763 3ACC 6840          DATA    /6840                COA TABLE EQU, TO (A1)
07764 3ACE 5002          RF(Z)   *+4
07765 3AD0 207F          HLT                          CR SHOULD BE ZERO
07766 3AD2 EC20          CWK     A4,COSDES+15
      3AD4 3AC1  R
07767 3AD6 5002          RF(Z)   *+4
07768 3AD8 207F          HLT                          A4 NOT CORRECT
07769                    *
07770                    *
07771 3ADA 8420          LDKL    A4,COSSOU
      3ADC 3AA2  R
07772 3ADE 8120          LDKL    A1,/FF00             (A1)=0000
      3AE0 FF00
07773 3AE2 8220          LDKL    A2,16
      3AE4 0010
07774 3AE6 8520          LDKL    A5,-1                ((A4))=FF ON COMPARE
      3AE8 FFFF
07775 3AEA 6840          DATA    /6840                COA
07776 3AEC 5202          RF(N)   *+4
07777 3AEE 207F          HLT                          CR SHOULD BE NEGATIVE
07778 3AF0 EC20          CWK     A4,COSSOU+1
      3AF2 3A33  R
07779 3AF4 5002          RF(E)   *+4
07780 3AF6 207F          HLT                          A4 POINTER IS NOT OK
07781                    *
07782                    *
07783 3AF8 8420          LDKL    A4,COSDES            FILL UP TABLE WITH FF
      3AFA 3AA2  R
07784 3AFC 01FF          LDK     A1,/FF
07785 3AFE 020E          LDK     A2,14
07786 3B00 6840          DATA    /6840                MOA
```

```
07787  3C02  8520        LDKL    A5,/FF00
       3C04  FF00
07788  3C06  8541        ST      A5,COSDES+8         ((A4)) ON COMPARE = 0
       3C08  3AB4  R
07789  3C0A  020F        LDK     A2,14
07790  3C0C  8420        LDKL    A4,COSDES
       3C0E  3AB2  R
07791  3C10  68A0        DATA    /68A0               SO (A1)>((A4))
07792  3C12  5102        RF(P)   *+4
07793  3C14  207F        HLT                         CR SHOULD POSITIVE
07794  3C16  EC20        CWK     A4,COSDES+9
       3C18  3ABB  R
07795  3C1A  5002        RF(F)   *+4
07796  3C1C  207F        HLT                         A4 POINTER IS NOT OK
07797  3C1E  8F20        ABL     ABTRAP
       3C20  3CCC  R
```

```
07798                          EJECT
07799                    *
07800                    *
07801                    ***   COA     FORMAT 18  1 0 IN CR
07802                    *                       IF (A2)#0
07803                    *     (NEW SET OF PROM'S) THEN : IF CHAR. (A1)=CHAR,((A3))
07804                    *                                  THEN (A3)+1 IN A3
07805                    *                                       (A2)-1 IN A2
07806                    *                                ELSE : 1 IN CR IF (A1)>((A3))
07807                    *                                       2 IN CR IF (A1)<((A3))
07808                    *
07809                    *
07810                    *
07811          3C22      COANV   EQU     *
07812    3C22  8320              LDKL    A3,COSSOU
         3C24  3AA2  R
07813    3C26  0100              LDK     A1,0
07814    3C28  0200              LDK     A2,0                NO COMPARE
07815    3C2A  8520              LDKL    A5,-1               SET CR TO 2
         3C2C  FFFF
07816    3C2E  68A0              DATA    /68A0               COA
07817    3C30  5002              RF(Z)   *+4
07818    3C32  207F              HLT                         CR IS NOT ZERO
07819    3C34  FB20              CWK     A3,COSSOU
         3C36  3AA2  R
07820    3C38  5002              RF(F)   *+4
07821    3C3A  207F              HLT                         A3 HAS BEEN MODIFIED
07822    3C3C  8208              LDR     A2,A2
07823    3C3E  5002              RF(Z)   *+4
07824    3C40  207F              HLT                         A2 HAS BEEN MODIFIED
07825                    *
07826                    *
07827    3C42  8420              LDKL    A4,COSDES           FILL UP TABLE WITH 0
         3C44  3AB2  R
07828    3C46  0100              LDK     A1,0
07829    3C48  0210              LDK     A2,16
07830    3C4A  6840              DATA    /6840               MOA
```

```
07831 3C4C 0100          LDK     A1,0
07832 3C4E 8320          LDKL    A3,COSDES
      3C50 3AB2  R
07833 3C52 0210          LDK     A2,16
07834 3C54 8520          LDKL    A5,-1
      3C56 FFFF
07835 3C58 68A0          DATA    /68A0                   COA TABLE EQU, TO (A1)
07836 3C5A 5002          RF(Z)   *+4
07837 3C5C 207F          HLT                             CR SHOULD BE ZERO
07838 3C5E EB20          CWK     A3,COSDES+15
      3C60 3AC1  R
07839 3C62 5002          RF(Z)   *+4
07840 3C64 207F          HLT                             A3 POINTER IS NOT OK
07841                    *
07842                    *
07843 3C66 8320          LDKL    A3,COSSOU
      3C68 3AA2  R
07844 3C6A 8120          LDKL    A1,/FF00                (A1)=0000
      3C6C FF00
07845 3C6E 8220          LDKL    A2,16
      3C70 0010
07846 3C72 8520          LDKL    A5,-1                   ((A3))=FF ON COMPARE
      3C74 FFFF
07847 3C76 68A0          DATA    /68A0                   COA
07848 3C78 5202          RF(N)   *+4
07849 3C7A 207F          HLT                             CR SHOULD BE NEGATIVE
07850 3C7C EB20          CWK     A3,COSSOU+1
      3C7E 3AA3  R
07851 3C80 5002          RF(E)   *+4
07852 3C82 207F          HLT                             A3 POINTER IS NOT OK
07853                    *
07854                    *
07855 3C84 8420          LDKL    A4,COSDES               FILL UP TABLE WITH FF
      3C86 3AB2  R
07856 3C88 01FF          LDK     A1,/FF
07857 3C8A 020E          LDK     A2,14
07858 3C8C 6840          DATA    /6840                   MOA
```

```
07659  3C8E  8520        LDKL    A5,/FF00
       3C90  FF00
07660  3C92  8541        ST      A5,COSDES+8          ((A3)) ON COMPARE = 0
       3C94  3ABA  R
07661  3C96  020E        LDK     A2,14
07662  3C98  8320        LDKL    A3,COSDES
       3C9A  3AB2  R
07663  3C9C  68A0        DATA    /68A0                SO (A1)>((A4))
07664  3C9E  5102        RF(P)   *+4
07665  3CA0  207F        HLT                          CR SHOULD POSITIVE
07666  3CA2  E820        CWK     A3,COSDES+9
       3CA4  3ABB  R
07667  3CA6  5002        RF(F)   *+4
07668  3CA8  207F        HLT                          A3 POINTER IS NOT OK
07669  3CAA  5720        RF      ABTRAP
```

```
07670                                  EJECT
07671                3CAC      SEGTAB  EQU     *
07672  3CAC  0000                       DATA    0,/400,/800,/C00
       3CAE  0400
       3CB0  0800
       3CB2  0C00
07673  3CB4  1000                       DATA    /1000,/1400,/1800,/1C00
       3CB6  1400
       3CB8  1800
       3CBA  1C00
07674  3CBC  2000                       DATA    /2000,/2400,/2800,/2C00
       3CBE  2400
       3CC0  2800
       3CC2  2C00
07675  3CC4  3000                       DATA    /3000,/3400,/3800,/3C00
       3CC6  3400
       3CC8  3800
       3CCA  3C00
07676                      *
07677                      *
```

```
07A73                          EJECT
07A79                  ********************************************************
07A80                  *                                                      *
07A81                  *                                                      *
07A82                  *        TEST     TRAPPED     INSTRUCTIONS             *
07A83                  *                                                      *
07A84                  *                                                      *
07A85                  *                                                      *
07A86                  ********************************************************
07A87                  *
07A88   3CCC           ABTRAP   EQU      *
07A89                  *
07A90                  *
07A91   3CCC  8420 '            LDKI     A4,SUTPAP          LOAD TRAP SUBROUTINE (SEE CPREL3)
        3CCE  4094 R
07A92   3CD0  8441              ST       A4,WTRAP
        3CD2  007E
07A93   3CD4  8740              LDKI     A15,STACK          LOAD STACK ADDRESS
        3CD6  0180
07A94   3CD8  8840              TL       SEGTAB             LOAD SEGMENT TABLE
        3CDA  3CAC  R
07A95   3CDC  8F20              ABL(7)   ABTRAB
        3CDE  3F5E  R
```

```
07296                          EJECT
07297                  ******  ******  ************
07298                  **
07299                  *       INSTRUCTION TABLE
07300                  **
07301                  ******  ******  ************
07302                  **
07303                  ******  ******  ************
07304                  **
07305                  *       SHORT CONSTANT INSTRUCTIONS
07306                  *
07307                  *               FORMAT 0 - TYPE T8
07308                  **
07309                  ******  ******  ************
07310                  *
07311  0000    LDK     EQU     0               LOAD SHORT CONSTANT
07312  0800    AR      EQU     /800            ABSOLUTE CONDITIONAL SHORT BRANCH
07313  1000    ADK     EQU     /1000           ADD SHORT CONSTANT
07314  1800    SUK     EQU     /1800           SUBTRACT SHORT CONSTANT
07315  2000    ANK     EQU     /2000           LOGICAL AND WITH SHORT CONSTANT
07316  2800    ORK     EQU     /2800           LOGICAL OR WITH SHORT CONSTANT
07317  3000    XRK     EQU     /3000           EXCLUSIVE OR WITH SHORT CONSTANT
07318  3800    SH      EQU     /3800           SHIFTS
07319  4000    CIO     EQU     /4000           CONTROL INPUT/OUTPUT
07320  4800    INR     EQU     /4800           INPUT TO REGISTER
07321  5000    PF      EQU     /5000           RELATIVE FORWARD CONDITIONAL BRANCH
07322  5800    RB      EQU     /5800           RELATIVE BACKWARD CONDITIONAL BRANCH
07323  6800    T7C     EQU     /6800
07324  7000    WER     EQU     /7000           WRITE EXTERNAL REGISTER
07325  7800    RER     EQU     /7800           READ EXTERNAL REGISTER
```

```
07026                    EJECT
07027                *
07028                *
07029                ******  ******  ************
07030                **
07031                *       REGSITER TO REGISTER OPERATIONS
07032                *
07033                *               FORMAT 1 - TYPE T1
07034                **
07035                ******  ******  ************
07036                *
07037    8000        LDR     EQU     /8000           LOAD REGISTER/REGISTER
07038    8800        ABR     EQU     /8800           ABSOLUTE CONDITIONAL BRANCH TO REGISTER
07039    9000        ADR     EQU     /9000           ADDITION REGISTER/REGISTER
07040    9800        SUR     EQU     /9800           SUBTRACT REGISTER/REGISTER
07041    A000        ANR     EQU     /A000           LOGICAL AND REGISTER/REGISTER
07042    A800        ORR     EQU     /A800           LOGICAL OR REGISTER/REGISTER
07043    B000        XRR     EQU     /B000           EXCLUSIVE OR REGISTER/REGISTER
07044    C000        MUR     EQU     /C000           MULTIPLY REGISTER / REGISTER
07045    C800        DVR     EQU     /C800           DIVIDE REGISTER / REGISTER
07046    C800        FFX     EQU     /C800           FLOATING POINT TO INTEGER
07047    D000        DAR     EQU     /D000           DOUBLE ADD REGISTER / REGISTER
07048    D800        DSR     EQU     /D800           DOUBLE SUBTRACT REGISTER / REGISTER
07049    E000        ECR     EQU     /E000           EXCHANGE CHARACTER REGISTER/REGISTER
07050    E800        CWR     EQU     /E800           COMPARE WORD REGISTER/REGISTER
07051    F000        CFR     EQU     /F000           CALL FUNCTION R/R
07052    F800        C1R     EQU     /F800           ONE'S COMPLEMENT REGISTER/REGISTER
```

```
07953                          EJECT
07954                  ******  ******  ************
07955                  **
07956                  *       LONG CONSTANT INSTRUCTIONS
07957                  *
07958                  *                FORMAT 1 - TYPE T2
07959                  **
07960                  ******  ******  ************
07961                  *
07962                  *
07963   8020   LDKL    EQU     /8020    LOAD LONG CONSTANT
07964   8820   ABL     EQU     /8820    ABSOLUTE CONDITIONAL LONG BRANCH
07965   9020   ADKL    EQU     /9020    ADD LONG CONSTANT
07966   9820   SUKL    EQU     /9820    SUBTRACT LONG CONSTANT
07967   A020   ANKL    EQU     /A020    LOGICAL AND WITH LONG CONSTANT
07968   A820   ORKL    EQU     /A820    LOGICAL OR WITH LONG CONSTANT
07969   B020   XRKL    EQU     /B020    EXCLUSIVE OR WITH LONG CONSTANT
07970   B820   MLK     EQU     /B820    MULTIPLE LOAD CONSTANT
07971   C020   MUK     EQU     /C020    MULTIPLY WITH CONSTANT
07972   C820   DVK     EQU     /C820    DIVIDE WITH CONSTANT
07973   D020   DAK     EQU     /D020    DOUBLE ADD WITH CONSTANT
07974   D820   DSK     EQU     /D820    DOUBLE SUB WITH CONSTANT
07975   E020   LCK     EQU     /E020    LOAD CHARACTER
07976   E820   CWK     EQU     /E820    COMPARE WORD WITH CONSTANT
07977   F020   CF      EQU     /F020    CALL FUNCTION
```

```
07078                    EJECT
07079                *
07080                *
07081                ******   ******   ************
07082                **
07083                *        INSTRUCTIONS WITH ADDRESS IN REGISTER
07084                *
07085                *                 FORMAT 1 - TYPE T3
07086                **
07087                ******   ******   ************
07088                *
07089                *
07090      8022      LDRI     EQU      /8022          INDIRECT LOAD R/R
07091      8822      ABRI     EQU      /8822          INDIRECT ABSOLUTE BRANCH TO REGISTER
07092      9022      ADRI     EQU      /9022          INDIRECT ADDITION R/R
07093      9822      SURI     EQU      /9822          INDIRECT SUBTRACT R/R
07094      A022      ANRI     EQU      /A022          INDIRECT LOGICAL AND
07095      A822      ORRI     EQU      /A822          INDIRECT LOGICAL OR
07096      B022      XRRI     EQU      /B022          INDIRECT EXCLUSIVE OR R/R
07097      B822      MLR      EQU      /B822          MULTIPLE LOAD REGISTER
07098      C022      MURI     EQU      /C022          MULTIPLY REGISTER / REGISTER
07099      C822      DVRI     EQU      /C822          DIVIDE REGISTER / REGISTER
07100      D022      DARI     EQU      /D022          DOUBLE ADD REGISTER / REGISTER
07101      D822      DSRI     EQU      /D822          DOUBLE SUB REGISTER / REGISTER
07102      E022      LCP      EQU      /E022          LOAD CHARACTER/REGISTER
07103      E822      CWRI     EQU      /E822          INDIRECT COMPARE R/R
07104      F022      RTN      EQU      /F022          RETURN
07105      F822      CIRI     EQU      /F822          INDIRECT ONE'S COMPLEMENT R/R
```

```
                        EJECT
                ******  ******  ************
                **
                *       REFERENCE MEMORY INSTRUCTIONS
                *
                *               FORMAT 1 - TYPE T4,T5,T6,T7
                **
                ******  ******  ************
                *
                *
0040    LD      EQU     /8040           LOAD REGISTER
4040    ABI     EQU     /8840           ABSOLUTE INDIRECT BRANCH
9040    AD      EQU     /9040           ADDITION
9840    SU      EQU     /9840           SUBTRACT
A040    AN      EQU     /A040           LOGICAL AND
A840    OR      EQU     /A840           LOGICAL OR
B040    XR      EQU     /B040           EXCLUSIVE OR
B840    ML      EQU     /B840           MULTIPLE LOAD
C040    MU      EQU     /C040           MULTIPLY
C840    DV      EQU     /C840           DIVIDE
D040    DA      EQU     /D040           DOUBLE ADD
D840    DS      EQU     /D840           DOUBLE SUB
E040    LC      EQU     /E040           LOAD CHARACTER
E840    CW      EQU     /E840           COMPARE WORD
F040    CFI     EQU     /F040           INDIRECT CALL FUNCTION
F840    C1      EQU     /F840           ONE'S COMPLEMENT
```

```
08032                    EJECT
08033          ******    ******    ************
08034          **
08035          *         REFERENCE INSTRUCTION TABLE
08036          **
08037          ******    ******    ************
08038          *
08039          ********************************************************************************
08040          ********************************************************************************
08041          *   OPERATION    * IVAL OUTPUT * OR1/.K15 * OR1.K15 * OR1/.K15/ * OR1.K15/ *
08042          *                * (A10 VALUE) *          *         *          *          *
08043          ********************************************************************************
08044          *                *             *          *         *          *          *
08045          *      OPC       *             *          *         *          *          *
08046          *                *             *          *         *          *          *
08047          *      OPC+/200  *      5      *   TRAP   *         *    TRAP  *          *
08048          *                *             *          *         *          *          *
08049          *      OPC+/280  *      A      *          *   TRAP  *          *   TRAP   *
08050          *                *             *          *         *          *          *
08051          *      OPC+/400  *      3      *   TRAP   *   TRAP  *          *          *
08052          *                *             *          *         *          *          *
08053          *      OPC+/500  *      C      *          *         *    TRAP  *   TRAP   *
08054          *                *             *          *         *          *          *
08055          *      OPC+/600  *      1      *   TRAP   *   TRAP  *    TRAP  *          *
08056          *                *             *          *         *          *          *
08057          *      OPC+/680  *      2      *   TRAP   *   TRAP  *          *   TRAP   *
08058          *                *             *          *         *          *          *
08059          *      OPC+/700  *      4      *   TRAP   *         *    TRAP  *   TRAP   *
08060          *                *             *          *         *          *          *
08061          *      OPC+/780  *      8      *          *   TRAP  *    TRAP  *   TRAP   *
08062          *                *             *          *         *          *          *
08063          *      COMBINATION                                                         *
08064          *                *             *          *         *          *          *
08065          *      OPC+/400  *             *          *         *          *          *
08066          *    +           *      B      *          *   TRAP  *          *          *
08067          *      OPC+/780  *             *          *         *          *          *
08068          *                *             *          *         *          *          *
```

```
08069                *     OPC+/500   *           *         *         *         *          *
08070                *   +            *     F     *         *         *         *   TRAP   *
08071                *     OPC+/680   *           *         *         *         *          *
08072                *                *           *         *         *         *          *
08073                *   AND SO ...                                                        *
08074                *                *           *         *         *         *          *
08075                ***************************************************************************
08076                ***************************************************************************
```

```
08077                          EJECT
08078          3CE0    TABT8   EQU     *               INSTRUCTIONS IN FORMAT 0 TYPE T8
08079  3CE0    0000            DATA    LDK
08080  3CE2    0800            DATA    AB
08081  3CE4    1000            DATA    ADK
08082  3CE6    1800            DATA    SUK
08083  3CE8    2000            DATA    ANK
08084  3CEA    2800            DATA    ORK
08085  3CEC    3280            DATA    XRK+/280
08086  3CEE    4280            DATA    CIO+/280
08087  3CF0    4A80            DATA    INR+/280
08088  3CF2    5000            DATA    RF
08089  3CF4    5C00            DATA    RB+/400
08090  3CF6    3800            DATA    SH
08091  3CF8    6800            DATA    T7C
08092  3CFA    7000            DATA    WER
08093  3CFC    7800            DATA    RER
08094  3CFE    FFFF            DATA    /FFFF
08095                  *
08096          3D00    TABT1   EQU     *               INSTRUCTIONS IN FORMAT 1- TYPE T1
08097  3D00    8000            DATA    LDR
08098  3D02    9800            DATA    ABR
08099  3D04    9000            DATA    ADR
08100  3D06    9800            DATA    SUR             NORMALY SUR+/400
08101  3D08    9800            DATA    SUR             NORMALY SUR+/780
08102  3D0A    A680            DATA    ANR+/680
08103  3D0C    A780            DATA    ANR+/780
08104  3D0E    AE80            DATA    ORR+/680
08105  3D10    B680            DATA    XRR+/680
08106  3D12    B780            DATA    XRR+/780
08107  3D14    F800            DATA    CWR
08108  3D16    F680            DATA    CFR+/680
08109  3D18    F500            DATA    CFR+/500
08110  3D1A    C600            DATA    MUR+/600
08111  3D1C    D600            DATA    DAR+/600
08112  3D1E    DE00            DATA    DSR+/600
08113  3D20    E000            DATA    ECR
```

```
00114  3022  1180          DATA    C1R+/680
00115  3023  1F80          DATA    C1R+/780
00116  3026  0C00          DATA    DVR+/400
00117  3028  0F80          DATA    DVR+/780
00118  302A  FFFF          DATA    /FFFF
00119                  *
00120                  *
```

```
08121                          EJECT
08122                  *
08123          3D2C    TABT2   EQU     *               INSTRUCTIONS IN FORMAT 1 - TYPE T2
08124  3D2C    9420            DATA    LDKL+/400
08125  3D2E    9420            DATA    ADKL+/400
08126  3D30    9C20            DATA    SUKL+/400
08127  3D32    A6A0            DATA    ANKL+/680
08128  3D34    AEA0            DATA    ORKL+/680
08129  3D36    B6A0            DATA    XRKL+/680
08130  3D38    E6A0            DATA    LCK+/680
08131  3D3A    EC20            DATA    CWK+/400
08132  3D3C    EFA0            DATA    CWK+/780
08133  3D3E    F520            DATA    CF+/500
08134  3D40    8C20            DATA    ABL+/400
08135  3D42    BEA0            DATA    MLK+/680
08136  3D44    C620            DATA    MUK+/600
08137  3D46    CE20            DATA    DVK+/600
08138  3D48    D620            DATA    DAK+/600
08139  3D4A    DF20            DATA    DSK+/600
08140  3D4C    FFFF            DATA    /FFFF
08141                  *
08142                  *
08143          3D4E    TABT3   EQU     *               INSTRUCTIONS IN FORMAT 1 - TYPE T3
08144  3D4E    8022            DATA    LDRI
08145  3D50    9022            DATA    ADRI
08146  3D52    9822            DATA    SURI
08147  3D54    A6A2            DATA    ANRI+/680
08148  3D56    A522            DATA    ANRI+/500
08149  3D58    AEA2            DATA    ORRI+/680
08150  3D5A    AFA2            DATA    ORRI+/780
08151  3D5C    B6A2            DATA    XRRI+/680
08152  3D5E    B7A2            DATA    XRRI+/780
08153  3D60    E6A2            DATA    LCR+/680
08154  3D62    E7A2            DATA    LCR+/780
08155  3D64    EC22            DATA    CNRI+/400
08156  3D66    EFA2            DATA    CNRI+/780
08157  3D68    F622            DATA    RTN+/600
```

```
08158  3D6A  1522        DATA    RTN+/500
08159  3D6C  FEA2        DATA    C1RI+/680
08160  3D6E  F022        DATA    C1RI+/500
08161  3D70  8C22        DATA    ABRI+/400
08162  3D72  DF22        DATA    DSRI+/600
08163  3D74  B822        DATA    MLR
08164  3D76  C022        DATA    MURI
08165  3D78  C822        DATA    DVRI
08166  3D7A  D022        DATA    DARI
08167  3D7C  FFFF        DATA    /FFFF
```

```
08168                          EJECT
08169          3D7E    TABT4   EQU     *                INSTRUCTIONS IN FORMAT 1 - TYPES T4 TO T
08170  3D7E    A040            DATA    LD
08171  3D80    9040            DATA    AD
08172  3D82    9840            DATA    SU
08173  3D84    A6C0            DATA    AN+/680
08174  3D86    A540            DATA    AN+/500
08175  3D88    AEC0            DATA    OR+/680
08176  3D8A    AE40            DATA    OR+/780
08177  3D8C    B6C0            DATA    XR+/680
08178  3D8E    B740            DATA    XR+/780
08179  3D90    16C0            DATA    LC+/680
08180  3D92    1740            DATA    LC+/780
08181  3D94    1C40            DATA    CW+/400
08182  3D96    1EC0            DATA    CW+/780
08183  3D98    1540            DATA    CFI+/500
08184  3D9A    1EC0            DATA    C1+/680
08185  3D9C    1D40            DATA    C1+/500
08186  3D9E    8C40            DATA    ABI+/400
08187  3DA0    0E40            DATA    DS+/600
08188  3DA2    8840            DATA    ML
08189  3DA4    C040            DATA    MU
08190  3DA6    D040            DATA    DA
08191  3DA8    C840            DATA    DV
08192  3DAA    FFFF            DATA    /FFFF
```

```
                                EJECT
                      ******    ******    ************
                      **
                      *         COMMON SUBROUTINE FOR ALL FORMATS
                      **
                      ******    ******    ************
              3DAC    TINS      EQU       *
3DAC  47A1            TINS      CF        A15,TOPC          TO TEST OPC VALUE
3DAE  3DC8  R
3DB0  8204                      LDR       A2,A1             LOAD INSTRUCTION
3DB2  4220                      ANKL      A2,=7800          MASK TO OBTAIN OPC VALUE
3DB4  7800
3DB6  1A20                      CMK       A2,=7800          TEST IF THE MAX VALUE
3DB8  7800
3DBA  5006                      BF(O)     TINS1
3DBC  5120                      ADKL      A1,=800           INCREMENT THE OPC VALUE
3DBE  0800
3DC0  9E16                      BB        TINS
                      *
              3DC2    TINS1     EQU       *
3DC2  103F                      RTN       A15               RETURN
```

```
0P210                          EJECT
0P211                  ******  ******  ************
0P212                  **
0P213                  *       TEST OPC VALUE AND VALID INSTRUCTIONS
0P214                  **
0P215                  ******  ******  ************
0P216          3DC4    TOPC    EQU     *
0P217  3DC4    8240            LDKL    A10,0                 RESET DIFFERENT REGISTER
       3DC6    0000
0P218  3DC8    0300            LDK     A3,0
0P219  3DCA    8204            LDR     A2,A1                 LOAD INSTRUCTION TO BE TESTED
0P220  3DCC    7220            ANKL    A2,/7800              MASK TO OBTAIN THE OPC VALUE
       3DCE    7800
0P221          3DD0    TABEQU  EQU     *
0P222  3DD0    640C            LD      A4,TABT8,A3           LOAD INSTRUCTION FROM REFERENCE TABLE
       3DD2    3CF0  R
0P223  3DD4    FC20            CWK     A4,/FFFF              TEST THE LAST INSTRUCTION
       3DD6    FFFF
0P224  3DD8    502A            BF(0)   EXTRAP               TO EXECUTE THE INVALID INSTRUCTION
0P225  3DDA    8510            LDR     A5,A4                 * SEARCH THE INSTRUCTIONS INTO REFERENCE
0P226  3DDC    A520            ANKL    A5,/7800              TABLE
       3DDE    7800
0P227  3DE0    FD08            CWR     A5,A2
0P228  3DE2    5404            BF(4)   TOPC2
0P229  3DE4    F7A1            CF      A15,TVAL
       3DE6    3E48  R
0P230          3DE8    TOPC2   EQU     *
0P231  3DE8    1302            ADK     A3,2                  INCREMENT POINTER INTO REFERENCE TABLE
0P232  3DEA    5F1C            BB      TABEQU
```

```
                                EJECT
                        ******  ******  ************
                        **
                        *       COMMON TRAP ROUTINE
                        **
                        ******  ******  ************
                TRAP    EQU     *
                        ST      A2,RTNA         STORE THE INVALID INSTRUCTION
                RTNA    EQU     *
                        RES     1               EXECUTE THE INVALID INSTRUCTION
                        HLT                     INSTRUCTION NOT TRAPPED
                        HLT
                        LD      A7,INTRAP       TEST THE TRAP ADDRESS
                        CWK     A7,RTNA
                        RF(0)   **4
                        HLT                     INCORRECT ADDRESS
                        RTN     A15             RETURN
```

```
0E250                                EJECT
0E251                          *
0E252          3E04      EXTRAP  EQU     *               EXECUTE THE INVALID INSTRUCTIONS
0E253  3E04    B3BA              LDR     A11,A10
0E254  3E06    A3A0              ANKL    A11,1           TEST BIT 15 OF A10 REGISTER
       3E08    0001
0E255  3E0A    5406              RF(4)   EXT1
0E256  3E0C    F204              LDR     A2,A1           FORMAT: K15/-0R1
0E257  3E0E    F7A1              CF      A15,TRAP        TOEXECUTE THE INVALID INSTRUCTION
       3E10    3DEC  R
0E258          3E12      EXT1    EQU     *
0E259  3E12    B3BA              LDR     A11,A10
0E260  3E14    A3A0              ANKL    A11,2           TEST BIT 14 OF A10 REGISTER
       3E16    0002
0E261  3E18    540A              RF(4)   EXT2
0E262  3E1A    F204              LDR     A2,A1           FORMAT: K15/-0R1/
0E263  3E1C    AA20              ORKL    A2,/700
       3E1E    0700
0E264  3E20    F7A1              CF      A15,TRAP        TO EXECUTE THE INVALID INSTRUCTION
       3E22    3DEC  R
0E265          3E24      EXT2    EQU     *
0E266  3E24    B3BA              LDR     A11,A10
0E267  3E26    A3A0              ANKL    A11,4           TEST BIT 13 OF A10 REGISTER
       3E28    0004
0E268  3E2A    5408              RF(4)   EXT3
0E269  3E2C    F204              LDR     A2,A1           FORMAT:K15-0R1
0E270  3E2E    2A01              ORK     A2,1
0E271  3E30    F7A1              CF      A15,TRAP        TO EXECUTE THE INVALID INSTRUCTION
       3E32    3DEC  R
0E272          3E34      EXT3    EQU     *
0E273  3E34    B3BA              LDR     A11,A10
0E274  3E36    A3A0              ANKL    A11,8           TEST BIT 12 A10 REGISTER
       3E38    0008
0E275  3E3A    5404              RF(4)   EXT4
0E276  3E3C    F204              LDR     A2,A1           FORMAT: K15-/0R1
0E277  3E3E    AA20              ORKL    A2,/701
       3E40    0701
```

```
FILE 590  PAIF     - -          IDENT    CP57RE    5111 991 68981                    TIME 24H-60M-60S

0E276  3E02  1741               CF       A15,TRAP            TO EXECUTE THE INVALID INSTRUCTION
       3E04  3FEC  R
0E279        3E06       EXIT    EQU      *
0E280  3E46  103F               RTN      A15
```

```
0E281                          EJECT
0E282                  ******  ******  ************
0E283                  **
0E284                  *       TEST K15 AND R1 VALUE FOR VALID INSTRUCTIONS
0E285                  *
0E286                  *               THESE VALUES ARE INCLUDED IN R1 FIELD
0E287                  **
0E288                  ******  ******  ************
0E289                  *
0E290          3E48    TVAL    EQU     *
0E291  3E48  8510              LDR     A5,A4           TEST K15 VALUE
0E292  3E4A  A520              ANKL    A5,/400
       3E4C  0400
0E293  3E4E  5022              RF(4)   TVAL1
0E294  3E50  8510              LDR     A5,A4           TEST R1 VALUE
0E295  3E52  A520              ANKL    A5,/200
       3E54  0200
0E296  3E56  5006              RF(4)   TVAL2
0E297  3E58  AAA0              ORKL    A10,/F          VALID INSTRUCTION WHATEVER R1 AND K15
       3E5A  000F
0E298  3E5C  103E              RTN     A15             RETURN
0E299                  *
0E300          3E5E    TVAL2   EQU     *               R1 VALUE DIFFERENT
0E301  3E5E  8510              LDR     A5,A4           TEST R1 VALUE
0E302  3E60  A520              ANKL    A5,/180
       3E62  0180
0E303  3E64  5006              RF(4)   TVAL3
0E304  3E66  AAA0              ORKL    A10,5           VALID INSTRUCTION IF R1=0 WHATEVER K15
       3E68  0005
0E305  3E6A  103E              RTN     A15             RETURN
0E306                  *
0E307          3E6C    TVAL3   EQU     *
0E308  3E6C  AAA0              ORKL    A10,/A          VALID INSTRUCTION IF R1#0 WHATEVER K15
       3E6E  000A
0E309  3E70  103E              RTN     A15             RETURN
0E310                  *
0E311          3E72    TVAL1   EQU     *               K15 VALUE DIFFERENT
```

```
0B312  3F72  B510          LDR     A5,A4           TEST R1 VALUE
0B313  3F74  A520          ANKL    A5,/200
       3F76  0200
0B314  3F78  5814          RF(4)   TVAL4
0B315  3F7A  B510          LDR     A5,A4           TEST K15 VALUE
0B316  3F7C  A520          ANKL    A5,/100
       3F7E  0100
0B317  3F80  5806          RF(4)   TVAL5
0B318  3F82  AAA0          ORKL    A10,3           VALID INSTRUCTION WHATEVER R1 IF K15=0
       3F84  0003
0B319  3F86  103F          RTN     A15             RETURN
0B320                *
0B321        3F88          TVAL5   EQU     *
0B322  3F88  AAA0          ORKL    A10,/C          VALID INSTRUCTION WHATEVER R1 IF K15=1
       3F8A  000C
0B323  3F8C  103F          RTN     A15             RETURN
0B324                *
0B325        3F8E          TVAL4   EQU     *       R1 AND K15 VALUES DIFFERENT
0B326  3F8E  B510          LDR     A5,A4           TEST R1 AND K15 VALUE
0B327  3F90  A520          ANKL    A5,/180
       3F92  0180
0B328  3F94  5D47          SRL     A5,7
0B329  3F96  8740          LD      A7,SHIFT
       3F98  3EA6  R
0B330  3F9A  A720          ANKL    A7,/FFF0        RESET SHIFT NUMBER .
       3F9C  FFF0
0B331  3F9E  AF14          ORR     A7,A5
0B332  3FA0  8741          ST      A7,SHIFT
       3FA2  3EA6  R
0B333  3FA4  0701          LDK     A7,1
0B334  3FA6  3F40          SHIFT   SLL     A7,0
0B335  3FA8  AA9C          ORR     A10,A7          LOAD R1 AND K15 VALUES
0B336  3FAA  103F          RTN     A15             RETURN
```

```
08337                              EJECT
08338          3EAC      TABTRA    EQU     *
08339  3EAC                       RES     80
08340          3F4C      RANGE     EQU     *
08341  3F4C    A328               LDR*    A3,A2
08342  3F4E    EB20               CWK     A3,/FFFF
       3F50    FFFF
08343  3F52    5008               RF(0)   RANEND
08344  3F54    A325               STR     A3,A1
08345  3F56    1202               ADK     A2,2
08346  3F58    1102               ADK     A1,2
08347  3F5A    5F10               RB(7)   RANGE
08348  3F5C    F03E      RANEND   RTN     A15
08349                     *
```

```
08350                          EJECT
08351                  ****************************************************************
08352                  *                                                              *
08353                  *        TEST INVALID INSTRUCTIONS IN FORMAT 0 - TYPE T8       *
08354                  *                                                              *
08355                  ****************************************************************
08356                  *
08357          3F5E    ABTRA8  EQU     *
08358  3F5C  80A0             LDKL    A8,0                    A8=0
       3F60  0000
08359  3F62  8120             LDKL    A1,TABTRA
       3F64  3EAC  R
08360  3F66  8220             LDKL    A2,TABT8                COMMON PART
       3F68  3CE0  R
08361  3F6A  F7A1             CF      A15,RANGE
       3F6C  3F4C  R
08362  3F6E  F7A1             CF      A15,FINEST
       3F70  408E  R
08363  3F72  0100             LDK     A1,0                    LOAD FIRST INSTRUCTION TO BE TESTED
08364  3F74  8620             LDKL    A6,TABTRA               LOAD INSTRUCTION TABLE FOR THIS FORMAT
       3F76  3EAC  R
08365  3F78  8641             ST      A6,TABEQU+2
       3F7A  3DD2  R
08366  3F7C  F7A1             CF      A15,TINS                TO TEST OPC VALUE
       3F7E  3DAC  R
08367  3F80  8440             LD      A4,FTRAP
       3F82  40F2  R
08368  3F84  5002             RF(0)   **4
08369  3F86  207F             HLT                             NOT INHIBIT STATE
08370
```

```
08371                       EJECT
08372                  ***************************************************************
08373                  *                                                             *
08374                  *       TEST INVALID INSTRUCTIONS IN FORMAT 1 - TYPE T1       *
08375                  *                                                             *
08376                  ***************************************************************
08377                  *
08378  3F88  90A0          ADKL    A8,2                A8=2
       3F8A  0002
08379  3F8C  8120          LDKL    A1,TABTRA
       3F8E  3EAC  R
08380  3F90  8220          LDKL    A2,TABT1            COMMON PART
       3F92  3D00  R
08381  3F94  F7A1          CF      A15,RANGE
       3F96  3F4C  R
08382  3F98  F7A1          CF      A15,FINEST
       3F9A  408E  R
08383  3F9C  8120          LDKL    A1,/8000            LOAD FIRST INSTRUCTION TO BE TESTED
       3F9E  8000
08384  3FA0  8620          LDKL    A6,TABTRA           LOAD INSTRUCTION TABLE FOR THIS FORMAT
       3FA2  3EAC  R
08385  3FA4  8641          ST      A6,TABEQU+2
       3FA6  3DD2  R
08386  3FA8  F7A1          CF      A15,TINS            TO TEST OPC VALUE
       3FAA  3DAC  R
08387  3FAC  8440          LD      A4,FTRAP
       3FAE  40F2  R
08388  3FB0  5002          RF(0)   *+4
08389  3FB2  207F          HLT                         NOT INHIBIT STATE
08390
```

```
08391                          EJECT
08392                  ****************************************************************
08393                  *                                                              *
08394                  *       TEST INVALID INSTRUCTIONS IN FORMAT 1-TYPE T2-R2=0*
08395                  *                                                              *
08396                  ****************************************************************
08397                  *
08398  $FB4  90A0             ADKL    A8,2                    A8=4
       $FB6  0002
08399  $FB8  8120             LDKL    A1,TABTRA
       $FBA  $EAC  R
08400  $FBC  8220             LDKL    A2,TABT2                COMMON PART
       $FBE  3D2C  R
08401  $FC0  F7A1             CF      A15,RANGE
       $FC2  $F4C  R
08402  $FC4  F7A1             CF      A15,FINEST
       $FC6  408E  R
08403  $FC8  8120             LDKL    A1,/8020                LOAD FIRST INSTRUCTION TO BE TESTED
       $FCA  8020
08404  $FCC  8620             LDKL    A6,TABTRA               LOAD INSTRUCTION TABLE FOR THIS FORMAT
       $FCE  $EAC  R
08405  $FD0  8641             ST      A6,TABEQU+2
       $FD2  3D02  R
08406  $FD4  F7A1             CF      A15,TINS                TO TEST OPC VALUE
       $FD6  3DAC  R
08407  $FD8  8440             LD      A4,FTRAP
       $FDA  40F2  R
08408  $FDC  5002             RF(0)   *+4
08409  $FDE  207F             HLT                             NOT INHIBIT STATE
08410
```

```
08411                          EJECT
08412                  ***************************************************************
08413                  *                                                             *
08414                  *       TEST INVALID INSTRUCTION IN FORMAT 1-TYPE 3-R2=2      *
08415                  *                                                             *
08416                  ***************************************************************
08417                  *
08418  3FE0  90A0             ADKL    A8,2                  A8=6
       3FE2  0002
08419  3FE4  8120             LDKL    A1,TABTRA
       3FE6  3EAC  R
08420  3FE8  8220             LDKL    A2,TABT3
       3FEA  3D4E  R
08421  3FEC  F7A1             CF      A15,RANGE
       3FEE  3F4C  R
08422  3FF0  F7A1             CF      A15,FINEST
       3FF2  408E  R
08423  3FF4  8120             LDKL    A1,/8022              LOAD FIRST INSTRUCTION TO BE TESTED
       3FF6  8022
08424  3FF8  8620             LDKL    A6,TABTRA             LOAD INSTRUCTION TABLE FOR THIS FORMAT
       3FFA  3EAC  R
08425  3FFC  8641             ST      A6,TABEQU+2
       3FFE  3DD2  R
08426  4000  F7A1             CF      A15,TINS              TO TEST OPC VALUE
       4002  3DAC  R
08427  4004  8440             LD      A4,FTRAP
       4006  40F2  R
08428  4008  5002             RF(0)   *+4
08429  400A  207F             HLT                           NOT INHIBIT STATE
08430
```

```
08431                          EJECT
08432                  ***************************************************************
08433                  *                                                             *
08434                  *       TEST INVALID INSTRUCTION IN FORMAT 1 -TYPES T4-T7 *
08435                  *                                                             *
08436                  ***************************************************************
08437                  *
08438  4A0C  90A0              ADKL    A8,2                    A8=8
       4A0E  0002
08439  4A10  8120              LDKL    A1,TABTRA
       4A12  3EAC  R
08440  4A14  8220              LDKL    A2,TABT4
       4A16  3D7E  R
08441  4A18  F7A1              CF      A15,RANGE
       4A1A  3F4C  R
08442  4A1C  F7A1              CF      A15,FINEST
       4A1E  408E  R
08443  4A20  8120              LDKL    A1,/8040                LOAD FIRST INSTRUCTION TO BE TFSTED
       4A22  8040
08444  4A24  8620              LDKL    A6,TABTRA               LOAD INSTRUCTION TABLE FOR THIS FORMAT
       4A26  3EAC  R
08445  4A28  8641              ST      A6,TABEQU+2
       4A2A  3DD2  R
08446  4A2C  F7A1              CF      A15,TINS                TO TFST OPC VALUE
       4A2E  3DAC  R
08447  4A30  8440              LD      A4,FTRAP
       4A32  40F2  R
08448  4A34  5002              RF(0)   *+4
08449  4A36  207F              HLT                             NOT INHIBIT STATE
```

```
08450                                    EJECT
08451                          *
08452  4038  90A0                       ADKL    A8,2            A8= A (FORMAT T5)
       403A  0002
08453  403C  8120                       LDKL    A1,/8042        LOAD FIRST INSTRUCTION TO BE TESTED
       403E  8042
08454  4040  8620                       LDKL    A6,TABTRA       LOAD INSTRUCTION TABLE FOR THIS FORMAT
       4042  3EAC  R
08455  4044  8641                       ST      A6,TABEQU+2
       4046  3DD2  R
08456  4048  F7A1                       CF      A15,TINS        TO TEST OPC VALUE
       404A  3DAC  R
08457  404C  8440                       LD      A4,FTRAP
       404E  40F2  R
08458  4050  5002                       RF(0)   *+4
08459  4052  207F                       HLT                     NOT INHIBIT STATE
08460                          *
08461  4054  90A0                       ADKL    A8,2            A8= C (FORMAT T6)
       4056  0002
08462  4058  8120                       LDKL    A1,/8060        LOAD FIRST INSTRUCTION TO BE TESTED
       405A  8060
08463  405C  8620                       LDKL    A6,TABTRA       LOAD INSTRUCTION TABLE FOR THIS FORMAT
       405E  3EAC  R
08464  4060  8641                       ST      A6,TABEQU+2
       4062  3DD2  R
08465  4064  F7A1                       CF      A15,TINS        TO TEST OPC VALUE
       4066  3DAC  R
08466  4068  8440                       LD      A4,FTRAP
       406A  40F2  R
08467  406C  5002                       RF(0)   *+4
08468  406E  207F                       HLT                     NOT INHIBIT STATE
08469                          *
08470  4070  90A0                       ADKL    A8,2            A8= E (FORMAT T7)
       4072  0002
08471  4074  8120                       LDKL    A1,/8062        LOAD FIRST INSTRUCTION TO BE TESTED
       4076  8062
08472  4078  8620                       LDKL    A6,TABTRA       LOAD INSTRUCTION TABLE FOR THIS FORMAT
```

```
                407A  3EAC  R
08473           407C  8641        ST      A6,TABEQU+2
                407E  3DD2  R
08474           4080  F7A1        CF      A15,TINS            TO TEST OPC VALUE
                4082  3DAC  R
08475           4084  8440        LD      A4,FTRAP
                4086  40F2  R
08476           4088  5002        RF(0)   *+4
08477           408A  207F        HLT                         NOT INHIBIT STATE
08478           408C  5766        RF      TTEX
08479                 408E  FINEST  EQU     *
08480           4090  8320        LDKL    A3,/FFFF
                4092  FFFF
08481           4094  8325        STR     A3,A1
08482           4096  F03E        RTN     A15
```

```
08483                          EJECT
08484                    ******************************************************
08485                    *                                                    *
08486                    *        TEST INSTRUCTIONS TRAPPED WITH EXECUTE      *
08487                    *                                                    *
08488                    ******************************************************
08489                    *
08490  4096  0000       VARY0   DATA    0
08491        4098       TABEXN  EQU     *                   TABLE DE TRAPPED INSTRUCTIONS
08492  4098  F01D               EXR     A7
08493  409A  8620               LDKL    A6,/7000
       409C  7000
08494  409E  8640               LD      A6,VARY0
       40A0  4096  R
08495  40A2  F03E               RTN     A15
08496  40A4  A65C               AN      A6,VARY0,A7
       40A6  4096  R
08497  40A8  8660               XR*     A6,VARY0
       40AA  4096  R
08498  40AC  FE7C               CWA     A6,VARY0,A7
       40AE  4096  R
08499                    *
08500  40B0  0000       INTRAP  DATA    0
08501  40B2  0000       SAVE13  DATA    0
08502                    *
08503        40B4       SUTRAP  EQU     *
08504  40B4  85C1               ST      A13,SAVE13          SAVE A13
       40B6  40B2  R
08505  40B8  85BE               LDR*    A13,A15             SAVE STATUS WORD AND UPDATE A15
08506  40BA  A5A0               ANKL    A13,/FC04
       40BC  FC04
08507  40BE  EDA0               CWK     A13,/FC00
       40C0  FC00
08508  40C2  5004               BF(0)   *+6
08509                    *       UNEXPECTED INT.
08510  40C4  8F20               ABL     HLTINT
       40C6  0248  R
```

```
08511  40C8  B5BF          LDR*    A13,A15          SAVE ADDRESS AND UPDATE A15
08512  40CA  B5C1          ST      A13,INTRAP
       40CC  40B0  R
08513  40CE  95A0          ADKL    A13,6
       40D0  0006
08514                *     IF CPU IS NOT IN SYSTEM MODE THE FOLLOWING INST, WILL BE TRAPPED
08515  40D2  B5BF          STR     A13,A15          LOAD RETURN ADDRESS
08516  40D4  9FA0          SUKL    A15,2            UPDATE POITER INTO STACK
       40D6  0002
08517  40D8  F7A1          CF      A15,TSINH        TEST INHIBIT STATE
       40DA  40DE  R
08518  40DC  207F          HLT
08519                *
08520       40DE     TSINH  EQU     *
08521  40DE  B5BE          LDR*    A13,A15          SAVE STATUS WORD AND UPDATE A15
08522  40E0  A5A0          ANKL    A13,/40
       40E2  0040
08523  40E4  5004          RF(0)   *+6
08524  40E6  9041          IM      FTRAP
       40E8  40F2  R
08525  40EA  B5BF          LDR*    A13,A15          UPDATE A15
08526  40EC  B5C0          LD      A13,SAVE13       RESTORE A13
       40EE  40B2  R
08527  40F0  F03C          RTN     A15
08528                *
08529  40F2  0000     FTRAP  DATA    0
08530                *
08531       40F4     TTEX   EQU     *
08532  40F4  033A          LDK     A3,/3A
08533  40F6  87A0          LDKL    A15,/180         LOAD STACK ADDRESS
       40F8  0180
08534  40FA  8420          LDKL    A4,SUTRAP
       40FC  40B4  R
08535  40FE  8441          ST      A4,WTRAP         LOAD TRAP ROUTINE ADDRESS
       4100  007F
08536  4102  2840          ENB
08537  4104  1302          ADK     A3,2             A3=/3C
```

```
08538  4106  0400          LDK     A4,0
08539  4108  8441          ST      A4,FTRAP
       410A  40F2  R
08540  410C  F041    RTN1  EX      TABEXN          EXECUTE AN INSTRUCTION WITH OPC=14
       410E  4098  R
08541  4110  207F          HLT
08542  4112  8440          LD      A4,INTRAP
       4114  4080  R
08543  4116  EC20          CWK     A4,RTN1         TEST TRAP ADDRESS
       4118  410C  R
08544  411A  5002          RF(0)   *+4
08545  411C  207F          HLT                     WRONG ADDRESS
08546  411E  8440          LD      A4,FTRAP
       4120  40F2  R
08547  4122  5002          RF(0)   *+4
08548  4124  207F          HLT                     NOT IN INHIBIT STATE AFTER A TRAP
08549  4126  1302          ADK     A3,2            A3=/3E
08550                *
08551  4128  0400          LDK     A4,0
08552  412A  8441          ST      A4,FTRAP
       412C  40F2  R
08553        412E    RTN2  EQU     *
08554  412E  F041          EX      TABEXN+2        EXECUTE AN INSTRUCTION IN T2 FORMAT
       4130  409A  R
08555  4132  207F          HLT
08556  4134  8440          LD      A4,INTRAP
       4136  4080  R
08557  4138  EC20          CWK     A4,RTN2         TEST TRAP ADDRESS
       413A  412E  R
08558  413C  5002          RF(0)   *+4
08559  413E  207F          HLT                     WRONG ADDRESS
08560  4140  8440          LD      A4,FTRAP
       4142  40F2  R
08561  4144  5002          RF(0)   *+4
08562  4146  207F          HLT                     NOT IN INHIBIT
08563  4148  1302          ADK     A3,2            A3=/40
08564                *
```

```
08565 414A 0400          LDK   A4,0
08566 414C 8441          ST    A4,FTRAP
      414E 40F2 R
08567      4150    RTN3  EQU   *
08568 4150 F041          EX    TAREXN+6          EXECUTE AN INSTRUCTION IN T4 FORMAT
      4152 409F R
08569 4154 207F          HLT
08570 4156 8440          LD    A4,INTRAP
      4158 4080 R
08571 415A EC20          CWK   A4,RTN3           TEST TRAP ADDRESS
      415C 4150 R
08572 415E 5002          RF(0) *+4
08573 4160 207F          HLT                     WRONG ADDRESS
08574 4162 8440          LD    A4,FTRAP
      4164 40F2 R
08575 4166 5002          RF(0) *+4
08576 4168 207F          HLT                     NOT IN INHIBIT
08577 416A 1302          ADK   A3,2              A3=/42
08578                    *
08579 416C 0400          LDK   A4,0
08580 416E 8441          ST    A4,FTRAP
      4170 40F2 R
08581      4172    RTN4  EQU   *
08582 4172 F041          EX    TAREXN+10         EXECUTE AN INSTRUCTION RETURN
      4174 40A2 R
08583 4176 207F          HLT
08584 4178 8440          LD    A4,INTRAP
      417A 4080 R
08585 417C EC20          CWK   A4,RTN4           TEST TRAP ADDRESS
      417E 4172 R
08586 4180 5002          RF(0) *+4
08587 4182 207F          HLT                     WRONG ADDRESS
08588 4184 8440          LD    A4,FTRAP
      4186 40F2 R
08589 4188 5002          RF(0) *+4
08590 418A 207F          HLT                     NOT IN INHIBIT
08591 418C 1302          ADK   A3,2              A3=/44
```

```
08592                          *
08593  419E  0400               LDK     A4,0
08594  41A0  8441               ST      A4,FTRAP
       41A2  40F2  R
08595        41A4        RTN5    EQU     *
08596  41A4  F041               EX      TABEXN+12          EXECUTE AN INSTRUCTION IN T5 FORMAT
       41A6  40A4  R
08597  41A8  207F               HLT
08598  41AA  8440               LD      A4,INTRAP          TEST TRAP ADDRESS
       41AC  40B0  R
08599  41AE  EC20               CWK     A4,RTN5
       41B0  41A4  R
08600  41B2  5002               RF(0)   *+4
08601  41B4  207F               HLT                        WRONG ADDRESS
08602  41B6  8440               LD      A4,FTRAP
       41B8  40F2  R
08603  41BA  5002               RF(0)   *+4
08604  41BC  207F               HLT                        NOT IN INHIBIT
08605  41BE  1302               ADK     A3,2               A3=/46
08606                          *
08607  41C0  0400               LDK     A4,0
08608  41C2  8441               ST      A4,FTRAP
       41C4  40F2  R
08609        41C6        RTN6    EQU     *
08610  41C6  F041               EX      TABEXN+16          EXECUTE AN INSTRUCTION IN T6 FORMAT
       41C8  40A8  R
08611  41CA  207F               HLT
08612  41CC  8440               LD      A4,INTRAP          TEST TRAP ADDRESS
       41CE  40B0  R
08613  41D0  EC20               CWK     A4,RTN6
       41D2  41C6  R
08614  41D4  5002               RF(0)   *+4
08615  41D6  207F               HLT                        WRONG ADDRESS
08616  41D8  8440               LD      A4,FTRAP
       41DA  40F2  R
08617  41DC  5002               RF(0)   *+4
08618  41DE  207F               HLT                        NOT IN INHIBIT
```

```
08619  41D0  1302          ADK     A3,2              A3=/48
08620                *
08621  41D2  0400          LDK     A4,0
08622  41D4  8441          ST      A4,FTRAP
       41D6  40F2  R
08623        41DA    RTN7  EQU     *
08624  41D8  F041          EX      TABEXN+20         EXECUTE AN INSTRUCTION IN T7 FORMAT
       41DA  40AC  R
08625  41DC  207F          HLT
08626  41DE  8440          LD      A4,INTRAP         TEST TRAP ADDRESS
       41E0  4080  R
08627  41E2  EC20          CWK     A4,RTN7
       41E4  41D8  R
08628  41E6  5002          RF(0)   *+4
08629  41E8  207F          HLT                       WRONG ADDRESS
08630  41EA  8440          LD      A4,FTRAP
       41EC  40F2  R
08631  41EF  5002          RF(0)   *+4
08632  41F0  207F          HLT                       NOT IN INHIBIT
08633  41F2  20BF          INH
```

```
08634                       EJECT
08635                  ********************************************************************************
08636                  *                                                                              *
08637                  *                                                                              *
08638                  *          TRAP TEST IN "D" FORMAT INSTRUCTION                                 *
08639                  *                                                                              *
08640                  *                                                                              *
08641                  ********************************************************************************
08642                  *
08643                  *
08644                  *
08645          41F4    TRAPDF  EQU     *
08646  41F4    8120            LDKL    A1,HLTRAP               LOCK TRAP IN /7E
       41F6    0246  R
08647  41F8    8141            ST      A1,WTRAP
       41FA    007E
08648  41FC    8120            LDKL    A1,SUTRAP
       41FE    40B4  R
08649  4200    8141            ST      A1,WTRAPD               UNLOCK TRAP IN /7C
       4202    007C
08650  4204    87A0            LDKL    A15,/180                INI, STACK POINTER
       4206    01A0
08651  4208    0101            LDK     A1,1                    START FROM 1 TO SKIP MOS
08652          420A    TRAPDO  EQU     *
08653  420A    8220            LDKL    A2,TRAPD
       420C    4218  R
08654  420E    823F            STR     A2,A15
08655  4210    8220            LDKL    A2,/FC41                SWITCH TO ENB, AND USER
       4212    FC41
08656  4214    823F            STR     A2,A15
08657  4216    F03F            RTN     A15
08658          4218    TRAPD   EQU     *
08659  4218    A041            CM      FTRAP
       421A    40F2  R
08660  421C    8220            LDKL    A2,/6800
       421E    6800
08661  4220    9204            ADR     A2,A1
```

```
08662  4222 8241          ST      A2,TRAPD1
       4224 4226  R
08663       4226   TRAPD1  EQU     *
08664  4226 0000          DATA    0                  INSTRUCTION IN D FORMAT
08665  4228 207F          HLT                        INSTRUCTION NOT TRAPPED
08666  422A 5700          RF      *+2                THIS RF INSURE COMPATIBILITY FOR SUTRAP
08667  422C 8340          LD      A3,INTRAP
       422E 4080  R
08668  4230 E820          CWK     A3,TRAPD1
       4232 4226  R
08669  4234 5002          RF(E)   *+4
08670  4236 5F02          RB      *                  WRONG ADDRESS
08671  4238 8440          LD      A4,FTRAP
       423A 40F2  R
08672  423C 5002          RF(Z)   *+4
08673  423E 5F02          RB      *                  NOT IN INH AFTER A TRAP
08674       4240   TRAPD2  EQU     *
08675  4240 1101          ADK     A1,1
08676  4242 E920          CWK     A1,/40
       4244 0040
08677  4246 5808          RB(E)   TRAPD2             SKIP MOA
08678  4248 E920          CWK     A1,/80
       424A 0080
08679  424C 580E          RB(E)   TRAPD2             SKIP COS
08680  424E E920          CWK     A1,/A0
       4250 00A0
08681  4252 5814          RB(E)   TRAPD2             SKIP COA
08682  4254 E920          CWK     A1,/FF
       4256 00FF
08683  4258 5D42          RB(NG)  TRAPD
08684  425A 8120          LDKL    A1,SWITCH
       425C 4266  R
08685  425E 8141          ST      A1,WTRAPD
       4260 007C
08686  4262 6820          DATA    /6820              EXECUTE A TRAP TO SWITCH
08687  4264 576E          RF      SMDSMU
08688                *
```

```
08689                      *
08690                      *
08691          4266        SWITCH  EQU     *
08692    4266  823E                LDR*    A2,A15          PSW
08693    4268  833E                LDR*    A3,A15          P
08694    426A  8220                LDKL    A2,/FC40        NEW PSW
         426C  FC40
08695    426E  1302                ADK     A3,2            CHANGE RETURN
08696    4270  833F                STR     A3,A15
08697    4272  823F                STR     A2,A15
08698    4274  F03E                RTN     A15
```

```
08699                    EJECT
08700                ****************************************************
08701                *                                                  *
08702                *                                                  *
08703                *        MISCELLANEOUS OPERATIONS CODES            *
08704                *                                                  *
08705                *                                                  *
08706                ****************************************************
08707                *
08708                *
08709                ****************************************************
08710                *                                                  *
08711                *                OPERATION CODE 5                  *
08712                *                                                  *
08713                ****************************************************
08714                *
08715                *
08716                ****************************************************
08717                *                                                  *
08718                *                                                  *
08719                *        TEST INSTRUCTIONS TRAPPED IN              *
08720                *                USER MODE                         *
08721                *                                                  *
08722                ****************************************************
08723                *
08724                *
08725         4276   TABSMD  EQU     *                 TRAPPED INSTRUCTIONS IN
08726                *                                  USER MODE
08727   4276 41E0            CIO     A1,1,/20          A5=0
08728   4278 4BA0            TST     A3,/20            =2
08729   427A 7308            WER     A3,8              =4
08730   427C 7B08            RER     A3,8              =6
08731   427E 701E            MVF     A15               =8
08732   4280 781E            MVB     A15               =10
08733   4282 3E9E            SLN     A6,A15            =12
08734   4284 3EBE            SRN     A6,A15            =14
08735   4286 389E            DLN     A15               =16
```

```
08736  42B8  38BE          DRN     A15                 =18
08737  42BA  8798          LDR     A15,A6              =20
08738  42BC  863E          LDR*    A6,A15              =22
08739  42BE  863F          STR     A6,A15              A5=24
08740  42C0  88BE          MLR     1,A15               =26
08741  42C2  88BF          MSR     1,A15               =28
08742  42C4  207F          HLT                         =30
08743  42C6  F784          DATA    /F784               A5=32     LDA  A15,/1000,A1
08744  42C8  1000          DATA    /1000
08745  42CA  8841          TS      /1000               =34
       42CC  1000
08746  42CF  D140          EL      A1,/1000            =36
       42D0  1000
08747  42D2  D141          ES      A1,/1000            =38
       42D4  1000
08748  42D6  F03E          RTN     A15                 =40
08749
```

```
08750                                  EJECT
08751                          *
08752                          *
08753          42A8      SUSMD EQU      *
08754  42A8    813E            LDR*    A1,A15
08755  42AA    A120            ANKL    A1,/FF41
       42AC    FF41
08756  42AE    E920            CWK     A1,/5541          STATUS WORD CORRECT ?
       42B0    5541
08757  42B2    5004            RF(0)   *+6               YES
08758  42B4    8F20            ABL     HLTINT            STATUS WORD INCORRECT !
       42B6    0248  R
08759  42B8    813E            LDR*    A1,A15            GET ADDRESS OF TRAPPED IM       NSTRUCTI
08760  42BA    8141            ST      A1,INTRAP         SAVE IT
       42BC    40B0  R
08761  42BE    1106            ADK     A1,6
08762  42C0    813F            STR     A1,A15            CHANGE RETURN ADDRESS TO CONTINUE
08763  42C2    9FA0            SUKL    A15,2             UP DATE POINTER
       42C4    0002
08764  42C6    ED20            CWK     A5,40
       42C8    0028
08765  42CA    5002            RF(0)   *+4
08766  42CC    F03F            RTN     A15
08767  42CE    8F20            ABL(7)  ENDSMD
       42D0    4356  R
08768                          *
08769                          *
08770          42D2      TESMD EQU      *
08771  42D2    F022            RTN     A8
08772                          *
08773                          *
08774
```

```
08775                                  EJECT
08776          42D4      SMDSMU        EQU
08777  42D4    8420                    LDKL    A4,SUSMD
       42D6    42A8  R
08778  42D8    8441                    ST      A4,WTRAP          LOAD TRAP ROUTINE ADDRESS
       42DA    007E
08779                    *
08780  42DC    0500                    LDK     A5,0
08781          42DE      EXESMD        EQU     *
08782  42DE    87A0                    LDKL    A15,STACK
       42E0    0180
08783  42E2    86A0                    LDKL    A14,STACK-20
       42E4    016C
08784  42E6    8220                    LDKL    A2,/5541          PLR=21 CR=1 ENB FU
       42E8    5541
08785  42EA    F6A1                    CF      A14,CHANGE
       42EC    4366  R
08786          42EE      EXSMD1        EQU     *
08787  42EE    820A                    LDR     A2,A2             SET CR TO 1
08788  42F0    F055                    EX      TABSMD,A5         EXECUTE ILLEGAL INSTRUCTION
       42F2    4276  R
08789                    ***
08790  42F4    5F02                    RB(7)   *                 INSTRUCTION NOT TRAPPED
08791                    ***
08792  42F6    8440                    LD      A4,INTRAP
       42F8    40B0  R
08793  42FA    EC20                    CWK     A4,EXSMD1+2
       42FC    42F0  R
08794  42FE    5002                    RF(0)   *+4
08795                    ***
08796  4300    5F02                    RB(7)   *                 WRONG ADDRESS
08797                    ***
08798  4302    1502                    ADK     A5,2
08799  4304    ED20                    CWK     A5,30             A5=30?
       4306    001E
08800  4308    5C1C                    RB(4)   EXSMD1
08801  430A    8208                    LDR     A2,A2             TO SET CR TO 1
```

```
08802  4330  207F        EXSMHL  HLT                     YES-EXECUTE AN ILLEGAL INSTRUCTION
08803  4330  5F02                RB(7)   *               INSTRUCTION NOT TRAPPED
08804  4310  5F02                RB(7)   *
08805  4312  8A40                LD      A4,INTRAP
       4314  4080  R
08806  4316  FC20                CWK     A4,EXSMHL       TEST TRAP ROUTINE
       4318  430C  R
08807  431A  5002                RF(0)   *+4
08808  431C  5F02                RB(7)   *               WRONG ADDRESS
08809                     *
08810  431E  1502                ADK     A5,2            =32
08811  4320  F784                DATA    /F784
08812  4322  1000                DATA    /1000
08813  4324  5F02                RB(7)   *               INSTRUCTION NOT TRAPPED
08814                     *
08815  4326  1502                ADK     A5,2            =34
08816  4328  8A41                TS      /1000
       432A  1000
08817  432C  5F02                RB(7)   *               INSTRUCTION NOT TRAPPED
08818                     *
08819  432E  1502                ADK     A5,2            =36
08820  4330  D140                EL      A1,/1000
       4332  1000
08821  4334  5F02                RB(7)   *               INSTRUCTION NOT TRAPPED
08822                     *
08823  4336  1502                ADK     A5,2            =38
08824  4338  D141        EXES    ES      A1,/1000
       433A  1000
08825  433C  5F02                RB(7)   *               INSTRUCTION NOT TRAPPED
08826                     *
08827  433E  1502                ADK     A5,2            =40
08828  4340  8120                LDKL    A1,/FC00        TO PREVENT NOT TRAPPED RTN A15
       4342  FC00
08829  4344  8141                ST      A1,STACK+2
       4346  0182
08830  4348  8120                LDKL    A1,EXE1
       434A  4352  R
```

```
08831  434C  8141          ST      A1,STACK+4
       434E  0184
08832  4350  F03F          RTN     A15
08833  4352  5F02  EXE1    RB      *                  INSTRUCTION NOT TRAPPED
08834  4354  5F02          RB(7)   *
08835        4356  ENDSMD   EQU     *
08836  4356  8220          LDKL    A2,/FC00           RETURN TO SYSTEM MODE
       4358  FC00
08837  435A  F6A1          CF      A14,CHANGE
       435C  4366  R
08838  435E  9041          IM      CALRUN
       4360  024A  R
08839  4362  8F20          ABL     START
       4364  0300  R
08840                      *
08841                      *
08842                      *
08843        4366  CHANGE    EQU     *
08844                      *       A1=RETURN ADDRESS
08845                      *       A2=PSW
08846  4366  8120          LDKL    A1,CHANG1
       4368  4370  R
08847  436A  813F          STR     A1,A15
08848  436C  823F          STR     A2,A15
08849  436E  F03E          RTN     A15
08850  4370  F03A  CHANG1  RTN     A14
08851                      *
08852                      END     START1
```

SYMBOL TABLE

AB	0A00	A	ABHLT1	082C	R	ABHLT2	0B3E	R	ABHLT5	0B6A	R
ABHLT6	0B54	R	ABI	8840	A	ABIH4	0B80	R	ABIH5	0B96	R
ABIH6	0BAA	R	ABIH7	0BBC	R	ABL	8820	A	ABR	8800	A
ABRT	8822	A	ABT2	082E	R	ABTRAB	3F5E	R	ABTRAP	3CCC	R
AD	9040	A	ADBR5	0B0E	R	ADBRH5	0B10	R	ADK	1000	A
ADKI	9020	A	ADKT8	0BFE	R	ADLD	080C	R	ADLDIN	080E	R
ADR	9000	A	ADRI	9022	A	AFTER	25C2	R	AN	A040	A
AND	32B2	R	ANK	2000	A	ANKL	A020	A	ANKT8	11BA	R
ANR	A000	A	ANRI	A022	A	BIPL	0080	R	BR1	0B38	R
BR2	0B40	R	BR3	0B50	R	BR4	0B6C	R	BR5	0B7C	R
BR6	0B56	R	BR7	0B66	R	BR7A	0BB2	R	C1	F840	A
C1R	F800	A	C1RI	F822	A	C1RT1	2450	R	C1T4	24D2	R
CALRUN	024A	R	CALSIR	343E	R	CAMUB	3480	R	CF	F020	A
CFI	F040	A	CFR	F000	A	CFT2	2262	R	CHANG1	4370	R
CHANGE	4366	R	CIO	4000	A	CNTFLG	00B8	R	COANV	3C22	R
COS	3AC2	R	COSDES	3AB2	R	COSSOU	3AA2	R	CREFIN	36CE	R
CRESUA	36C0	R	CRESUB	36C4	R	CRESUC	36CA	R	CW	E840	A
CWK	E820	A	CWKT2	1E1A	R	CWR	E800	A	CWRI	E822	A
DA	D040	A	DAK	D020	A	DAKT2	2E40	R	DAR	D000	A
DART	D022	A	DATCWR	1F98	R	DATML	2678	R	DATML1	2682	R
DEB	0000	R	DIVFLA	32BA	R	DIVIDE	364C	R	DONE	0226	R
DOUBLE	32BC	R	DS	D840	A	DSK	D820	A	DSKT2	2F9A	R
DSR	DA00	A	DSRI	D822	A	DV	C840	A	DVK	C820	A
DVKT2	3ADE	R	DVR	C800	A	DVRI	C822	A	ECR	E000	A
END	32BE	R	ENDIVI	36E0	R	ENDML	2680	R	ENDML1	268A	R
ENDMLR	2676	R	ENDSMD	4356	R	ENDTD	36DC	R	FSDIV	35EE	R
EUR	32C0	R	EXCMR	2596	R	EXE1	4352	R	EXES	4338	R
EXESMD	42DE	R	EXIMUL	340C	R	EXK1	2368	R	EXK2	2386	R
EXSMD1	42EE	R	EXSMUL	430C	R	EXT1	3E12	R	EXT2	3E24	R
EXT3	3F34	R	EXT4	3E46	R	EXTOVE	3632	R	EXTRAP	3E04	R
FFX	C800	A	FINEST	408E	R	FLAGOV	35F8	R	FTRAP	40F2	R
HLTINT	0248	R	HLTRAP	0246	R	INCAT6	2F96	R	INCAT7	2F98	R
INCFI3	21A4	R	INCFI4	2214	R	INDAD1	0BE6	R	INDAD2	0BE8	R
INDAD3	0BEA	R	INDAN1	119E	R	INDAN2	11A0	R	INDAT6	2E3C	R
INDAT7	2F3E	R	INDC11	244A	R	INDC12	244C	R	INDC13	244E	R

INDCC1	1DF4	R	INDCC2	1DF6	R	INDCFR	2186	R	INDCW1	1DF8	R
INDCW2	1DFA	R	INDLC1	1B02	R	INDLC2	1B04	R	INDSC1	1B06	R
INDSC2	1B08	R	INDST6	2F88	R	INDST7	2F8A	R	INDSU1	0E6A	R
INDSU2	0E6C	R	INDSU3	0E6E	R	INDV1	34CC	R	INDV2	34CE	R
INDXR1	1606	R	INDXR2	1608	R	INDXR3	160A	R	INMLT6	268C	R
INNST6	26CA	R	INMUT6	3162	R	INMUT7	3164	R	INOR1	1448	R
INOR2	144A	R	INOR3	144C	R	INR	4800	A	INTRAP	40B0	R
IPL	0084	R	IPL100	0098	R	IPL110	009C	R	ITYEMR	337C	R
IXEUR	33F0	R	LC	F040	A	LCK	E020	A	LCKT2	1B2A	R
LCR	E022	A	LD	8040	A	LDA	36E0	R	LDATP1	0810	R
LDATP2	0812	R	LDATP3	0814	R	LDEND1	3426	R	LDFLG	0080	R
LDK	0000	A	LDKL	8020	A	LDKT8	0826	R	LDR	8000	A
LDRDAT	0816	R	LDRI	8022	A	LDXAND	32E4	R	LDXEUR	333E	R
LEXRE1	3460	R	LEXRES	343A	R	LODEND	3406	R	LOPER	3402	R
LTYAND	32DC	R	MAXPOS	0204	R	MIONES	0818	R	ML	8840	A
MLK	8820	A	MLKT2	26CC	R	MLR	8822	A	MLRD	285E	R
MLRMSR	2B7E	R	MOSOV	3A2E	R	MU	C040	A	MUK	C020	A
MUKT2	3166	R	MUR	C000	A	MURI	C022	A	MVBT8	30FC	R
MVFRZ	309C	R	MVFT8	30A4	R	NBREC	00D7	A	NEWOP	33E8	R
NEWOP1	340E	R	ONE	0206	R	ONES	0202	R	OPER	32C6	R
OR	A840	A	ORK	2800	A	ORKL	A820	A	ORKT8	146A	R
ORR	A800	A	ORRI	A822	A	PARAM1	32EA	R	PARAM2	3326	R
PARAM3	3344	R	PARAM4	3382	R	RAN1	11A2	R	RANC1R	243E	R
RANEND	3F5C	R	RANGE	3F4C	R	RANXR1	160C	R	RASCR1	1B0A	R
RASUB1	0F98	R	RAZMLR	268E	R	RB	5800	A	RCWK1	1DFC	R
RCWK2	1DFE	R	RCWK3	1E00	R	RCWK4	1E02	R	RECR1	1B0C	R
RECR2	1B0E	R	REG1	081A	R	REG5	081C	R	REG6	081E	R
REGA	0820	R	RER	7800	A	RES	32D2	R	RESAD1	0BD0	R
RESAD2	0BD2	R	RESAD3	0BD4	R	RESAD4	0BD6	R	RESAD5	0BD8	R
RESAD6	0BDA	R	RESAD7	0BDC	R	RESAD8	0BDE	R	RESAD9	0BE0	R
RESAN1	11A4	R	RESAN2	11A6	R	RESAN3	11A8	R	RESAN4	11AA	R
RESAN5	11AC	R	RESAN6	11AE	R	RESAN7	11B0	R	RESAN8	11B2	R
RESAN9	11B4	R	RESDV1	3684	R	RESO10	1462	R	RESO11	1464	R
RESOR1	1450	R	RESOR2	1452	R	RESOR3	1454	R	RESOR4	1456	R
RESOR5	1458	R	RESOR6	145A	R	RESOR7	145C	R	RESOR8	145E	R
RESOR9	1460	R	RESU10	0E82	R	RESU11	0E84	R	RESU12	0E86	R
RESU13	0F88	R	RESU14	0E8A	R	RESU15	0E8C	R	RESUB1	0E70	R

RESUB2	0E72	R	RESUB3	0E74	R	RESUB4	0E76	R	RESUB5	0E78	R
RESUB6	0E7A	R	RESUB7	0E7C	R	RESUB8	0E7E	R	RESUB9	0E80	R
RESUB0	3EEA	R	RESXR1	160E	R	RESXR2	1610	R	RESXR3	1612	R
RESXR4	1614	R	RESXR5	1616	R	RESXR6	1618	R	RESXR7	161A	R
RESXR8	161C	R	RESXR9	161E	R	REXE	2598	R	RF	5000	A
RLC1	1810	R	RLC2	1812	R	RLC3	1814	R	RLCK1	1816	R
RLCK2	1818	R	RLCK3	181A	R	RLCK4	181C	R	RLCR1	181E	R
RLCR2	1820	R	RLCRSC	1800	R	RNR1	144E	R	ROUT01	2258	R
ROUT02	225A	R	ROUT03	225C	R	ROUT04	225E	R	ROUT05	2260	R
RSC1	1822	R	RSC2	1824	R	RSC3	1826	R	RSCR1	1828	R
RSLA1	1818	R	RSLA2	181A	R	RSLA3	181C	R	RSLC1	1828	R
RSLC2	182A	R	RSLL1	1822	R	RSLL2	1824	R	RSLN1	1620	R
RSLN2	1622	R	RSLN3	1624	R	RSLN4	1626	R	RSLN5	1628	R
RSLN6	162A	R	RSRA1	181E	R	RSRA2	1820	R	RSRC1	182C	R
RSRC2	182E	R	RSRL1	1826	R	RSRN1	162C	R	RSRN2	162E	R
RTCF1	226C	R	RTCFI1	2328	R	RTCFR2	230C	R	RTCFR3	2122	R
RTCFR4	2132	R	RTCFR5	213E	R	RTN	F022	A	RTN1	410C	R
RTN2	412E	R	RTN3	4150	R	RTN4	4172	R	RTN5	4194	R
RTN6	41B6	R	RTN7	41D8	R	RTNA	3DF0	R	SAVE13	4082	R
SCR	342C	R	SEGTAB	3CAC	R	SH	3800	A	SHIFT	3EA6	R
SHSIR	3446	R	SHSIRE	3496	R	SIMU	342E	R	SIRES	32CE	R
SLAT8	1830	R	SMDSMU	42D4	R	SOVER	3614	R	STACK	0180	A
STADR1	08EC	R	START	0300	R	STARTJ	02F0	R	START2	02EC	R
STDAT1	0822	R	STDAT3	0824	R	STORP1	0A8A	R	STORP2	0A9C	R
STORP3	0AFC	R	STOVF	3448	R	STRD	3A1E	R	STREMI	381E	R
STRREC	3826	R	STRS	3A1E	R	STRTST	3836	R	STRZ	2B6E	R
STRZR	382E	R	SU	9840	A	SUIT	36E0	R	SUK	1800	A
SUKL	9820	A	SUKT8	0E9A	R	SUR	9800	A	SURI	9822	A
SUSMD	42A8	R	SUTRAP	40B4	R	SWITCH	4266	R	T7C	6800	A
TABEM	308C	R	TABEQU	3DD0	R	TABEX	2216	R	TABEX1	222A	R
TABEX2	222E	R	TABEXN	4098	R	TABI4	0B8C	R	TABI41	0B12	R
TABI42	0B14	R	TABI43	0B16	R	TABI5	0B98	R	TABI51	0B18	R
TABI52	0B1A	R	TABI6	0BAC	R	TABI61	0B1C	R	TABI62	0B1E	R
TABI63	0B20	R	TABI64	0B22	R	TABI7	0B8E	R	TABI71	0B24	R
TABI72	0B26	R	TABI73	0B28	R	TABI74	0B2A	R	TABIS5	0BA4	R
TABIS6	0BB6	R	TABIS7	0BCA	R	TABRE	3094	R	TABSMD	4276	R
TABT1	3D00	R	TABT2	3D2C	R	TABT3	3D4E	R	TABT4	3D7E	R

TABTB	3CE0	R	TABTAR	376C	R	TABTAS	3718	R	TABTB	37C6	R
TABTRA	3EAC	R	TAR	377C	R	TAS	3728	R	TB	37D4	R
TCFI1	2188	R	TCFI2	2198	R	TCFI3	219E	R	TCFI4	21A6	R
TCFI4A	21B8	R	TCFI4B	21C8	R	TCFI4C	21DA	R	TCFI4D	21EA	R
TCFI4F	21F6	R	TCFI4F	2202	R	TCFI4G	220E	R	TCFR2	211C	R
TCFR2A	2128	R	TCFR2B	2138	R	TCFR2C	2144	R	TCFR3	2180	R
TCW	1FE8	R	TCWK	1ED0	R	TCWR	1F88	R	TEMUL	32D6	R
TESCR	33CE	R	TESDIV	34D0	R	TESDOU	33FA	R	TESIM	3452	R
TESMD	42D2	R	TESRBN	03C4	R	TESRBV	03BA	R	TESRFS	33D4	R
TESRF	030A	R	TESTB2	3690	R	TESTBQ	36A2	R	TESTMB	369A	R
TESTMR	36BC	R	TESTOV	365E	R	TFSTPO	369C	R	TESTPR	3680	R
TESTRD	3668	R	TINS	3DAC	R	TINS1	3DC2	R	TOCF1	20E8	R
TOCF1A	2102	R	TOCF2	210C	R	TOCFR1	2116	R	TOPC	3DC4	R
TOPC2	3DE8	R	TOVER1	361C	R	TOVER2	35FA	R	TOVER3	362E	R
TOVER4	35FC	R	TRAP	3DEC	R	TRAPD	4218	R	TRAPD0	420A	R
TRAPD1	4226	R	TRAPD2	4240	R	TRAPDF	41F4	R	TSINH	40DE	R
TSIRES	34AE	R	TTFX	40F4	R	TTYAND	3466	R	TVAL	3E48	R
TVAL1	3E72	R	TVAL2	3E5E	R	TVAL3	3E6C	R	TVAL4	3E8E	R
TVAL5	3E88	R	TYAND	32B6	R	TYFUR	32C2	R	TYOPER	32CA	R
VACIR	2440	R	VACAT4	2F8E	R	VACAT5	2F90	R	VACAT6	2F92	R
VACAT7	2F94	R	VACCR1	1E04	R	VACCR2	1E06	R	VACCR3	1E08	R
VACW1	1E10	R	VACW2	1E12	R	VACW3	1E14	R	VACWR1	1E16	R
VACWR2	1E18	R	VAD1	0BE4	R	VADR1	0BE2	R	VALAN1	11B6	R
VALAN2	11B8	R	VALC1A	2442	R	VALC1B	2444	R	VALC1C	2446	R
VALC1D	2448	R	VALCAR	2F8C	R	VALCC1	1E0A	R	VALCC2	1E0C	R
VALCC3	1E0E	R	VALDA1	2E2C	R	VALDA2	2E30	R	VALDA3	2E34	R
VALDA4	2E38	R	VALDAR	2E28	R	VALDSR	2F74	R	VALDT4	2F78	R
VALDT5	2F7C	R	VALDT6	2F80	R	VALDT7	2F84	R	VALDV1	34C4	R
VALDV2	34C6	R	VALDV3	34C8	R	VALDV4	34CA	R	VALDVR	34C2	R
VALMLK	273E	R	VALMLR	266E	R	VALOR1	1466	R	VALOR2	1468	R
VALXR1	1630	R	VALXR2	1632	R	VAMUR1	3158	R	VAMUR2	315A	R
VAMUR3	315C	R	VAMUR4	315E	R	VAMUR5	3160	R	VARY0	4096	R
VASUB1	0F8E	R	VASUB2	0E90	R	VASUB3	0E92	R	VASUB4	0E94	R
VASUB5	0F96	R	WER	7000	A	WTRAP	007E	A	WTRAPD	007C	A
XAND	32B8	R	XEUR	32C4	R	XOPER	32CC	R	XR	B040	A
XRK	3000	A	XRKL	B020	A	XRKT8	1634	R	XRR	B000	A
XRRT	B022	A	ZERO	0200	R	ZOMSR	26AC	R			

ASS.ERR. 00000

IEDF

PROG ELAPSED TIME: 00H-00M-00S-000MS-